Certified Copy - Schedule

Title and Version	Adoption and Effective Date	Chief Executive Officer
Redlands Planning Scheme - Version 1 Short title - **RPS V1**	Adopted on 15 March 2006 Effective as of 30 March 2006	Name - Susan Rankin Signature -
Redlands Planning Scheme - Version 2 Short title - **RPS V2**	Includes Amendment No. 1A adopted on, and effective as of, 2nd July 2008; and Amendment No. 1B adopted on 27 August 2008 and effective as of 8th September 2008.	Name – Ray Turner Signature -
Redlands Planning Scheme - Version 2.1 Short title - **RPS V2.1**	Includes Administrative Amendment 1. Adopted on 24th February 2010 Effective as of 12th March 2010	Name – Gary Stevenson Signature -

Note -

- This Schedule is provided to record certified copies of the Redlands Planning Scheme that require the name and signature of the Chief Executive Officer.
- Refer to Part 1 - Introduction Division 1 - Introduction, section 1.1.1 Citation and Commencement for formal provisions.
- Refer to Part 12 - Planning Scheme Notations for full details of amendments.

Certified Copy - Schedule

this page purposely
left blank

Certified Copy - Schedule

Contents

Volume 1

Part 1 - Introduction

Division 1 - Introduction

1.1.1 Citation and Commencement
1.1.2 Application of the Redlands Planning Scheme
1.1.3 Purpose of the Redlands Planning Scheme
1.1.4 Relationship to *Integrated Planning Act 1997* (IPA)
1.1.5 Relationship to *Native Title Act 1993*

Division 2 - Planning Scheme Structural Elements

1.2.1 Redlands Planning Scheme Seeks to Achieve Outcomes
1.2.2 Redlands Planning Scheme has Zones
1.2.3 Redlands Planning Scheme has Overlays
1.2.4 Zones for Roads, Waterways and Reclaimed Land
1.2.5 Determining the Level of Assessment of Development
1.2.6 Determining Assessment Criteria for Development
1.2.7 Types and Names of Codes
1.2.8 Codes Applicable to Ongoing Use
1.2.9 Probable Solutions for Code Assessable Development
1.2.10 Designation of Land for Community Infrastructure

Part 2 - Interpretation

Division 1 - Interpretation

2.1.1 The Dictionary
2.1.2 Uses
2.1.3 Terms defined in the *Integrated Planning Act 1997* (IPA)
2.1.4 Standard Drawings, Notes, Diagrams and Maps
2.1.5 How to Read the Tables of Assessment and Assessment Criteria

Part 3 - Desired Environmental Outcomes

Division 1 - Desired Environmental Outcomes

3.1.1 Introduction
3.1.2 Desired Environmental Outcomes No. 1 - Natural Environment
3.1.3 Desired Environmental Outcomes No. 2 - Character and Identity
3.1.4 Desired Environmental Outcomes No. 3 - Community Health and Wellbeing
3.1.5 Desired Environmental Outcomes No. 4 - Access and Mobility
3.1.6 Desired Environmental Outcomes No. 5 - Essential Services
3.1.7 Desired Environmental Outcomes No. 6 - Economic Development

Division 2 - Strategic Framework

3.2.1 Introduction
3.2.2 Components of the Strategic Framework
3.2.3 Strategies for the City
3.2.4 Local Level Strategies applying to certain parts of the City
3.2.5 Strategy Diagrams

Part 4 - Zones

Division 1 - Commercial Industry Zone
Division 2 - Community Purposes Zone
Division 3 - Conservation Zone
Division 4 - District Centre Zone
Division 5 - Emerging Urban Community Zone
Division 6 - Environmental Protection Zone
Division 7 - General Industry Zone
Division 8 - Investigation Zone
Division 9 - Island Industry Zone
Division 10 - Local Centre Zone
Division 11 - Low Density Residential Zone
Division 12 - Major Centre Zone
Division 13 - Marine Activity Zone
Division 14 - Medium Density Residential Zone
Division 15 - Neighbourhood Centre Zone
Division 16 - Open Space Zone
Division 17 - Park Residential Zone
Division 18 - Point Lookout Centre Zone
Division 19 - Point Lookout Residential Zone
Division 20 - Point Lookout Tourist Zone
Division 21 - Rural Non-Urban Zone
Division 22 - SMBI Centre Zone
Division 23 - SMBI Residential Zone
Division 24 - Urban Residential Zone

Part 5 - Overlays

Division 1 - Acid Sulfate Soils Overlay
Division 2 - Airspace and Aviation Facilities Overlay
Division 3 - Bushfire Hazard Overlay
Division 4 - Electricity Infrastructure Overlay
Division 5 - Extractive Resources Overlay
Division 6 - Flood Prone, Storm Tide and Drainage Constrained Land Overlay
Division 7 - Habitat Protection Overlay
Division 8 - Heritage Place and character Precinct Overlay
Division 9 - Protection of the Poultry Industry Overlay
Division 10 - Road and Rail Noise Impacts Overlay
Division 11 - Water Supply Catchments Overlay
Division 12 - Waterways, Wetlands and Moreton Bay Overlay
Division 13 - Landslide Hazard Overlay
Division 25 - Small Lot House
Division 26 - Telecommunications Facility
Division 27 - Temporary Use
Division 28 - Tourist Accommodation
Division 29 - Tourist Park

Part 6 - Use Codes

Division 1 - Aged Persons and Special Needs Housing
Division 2 - Agriculture
Division 3 - Animal Keeping
Division 4 - Apartment Building
Division 5 - Bed and Breakfast
Division 6 - Caretakers Dwelling
Division 7 - Child Care Centre
Division 8 - Display Dwelling
Division 9 - Drive Through Restaurant
Division 10 - Dual Occupancy
Division 11 - Dwelling House
Division 12 - Estate Sales Office
Division 13 - Extractive Industry
Division 14 - Forestry
Division 15 - Home Business
Division 16 - Intensive Agriculture
Division 17 - Mobile Home Park
Division 18 - Multiple Dwelling
Division 19 - Outdoor Dining
Division 20 - Park
Division 21 - Relatives Apartment
Division 22 - Roadside Stall
Division 23 - Rural Enterprise
Division 24 - Service Station

Contents

Volume 2

Part 7 - Other Development Codes

Division 1 - Advertising Devices
Division 2 - Communications Structures
Division 3 - Domestic Additions
Division 4 - Domestic Driveway Crossover
Division 5 - Domestic Outbuilding
Division 6 - Excavation and Fill
Division 7 - On-Site Raising and Relocation
Division 8 - Private Swimming Pool
Division 9 - Private Tennis Court
Division 10 - Private Waterfront Structures
Division 11 - Reconfiguration

Part 8 - General Codes

Division 1 - Access and Parking
Division 2 - Centre Activity
Division 3 - Centre Design
Division 4 - Commercial Industry Activity
Division 5 - Development Near Underground Infrastructure
Division 6 - Erosion Prevention and Sediment Control
Division 7 - Infrastructure Works
Division 8 - Landscape
Division 9 - Stormwater Management

Part 9 - Schedules

Schedule 1 - Access and Parking
Schedule 2 - Community Infrastructure
Schedule 3 - Dictionary
Schedule 4 - Heritage Place Register
Schedule 5 - Lot Sizes
Schedule 6 - Movement Network and Road Design
Schedule 7 - Roof Colour Chart
Schedule 8 - Specific Advertising Devices
Schedule 9 - Street Trees
Schedule 10 - Vegetation Species List
Schedule 11 - Water Quality Objectives
Schedule 12 - Weed Species List

Part 10 - Priority Infrastructure Plan

Part 11 - Planning Scheme Policies

Policy 1 - Bushfire Hazard
Policy 2 - Community Consultation
Policy 3 - Contributions and Security Bonding
Policy 4 - Ecological Impacts
Policy 5 - Environmental Emissions
Policy 6 - Emerging Urban Community Structure Plans
Policy 7 - Flood Prone, Storm Tide and Drainage Constrained Land
Policy 8 - Housing
Policy 9 - Infrastructure Works
Policy 10 - Outdoor Dining
Policy 11 - Rural Lands and Uses
Policy 12 - Social and Economic Impact Assessment
Policy 13 - Telecommunications Facility
Policy 14 - Waterways, Wetlands and Moreton Bay
Policy 15 - Landslide Hazard
Policy 16 - Safer by Design
Policy 17 - Streetscape Design Manuals

Part 12 - Planning Scheme Notations

this page purposely
left blank

Contents

Part 1 - Introduction

Division 1 - Introduction

1.1.1 Citation and Commencement

(1) This planning scheme may be cited as the Redlands Planning Scheme.

(2) The Redlands Planning Scheme comprises this document, zone maps and overlay maps.

(3) The Redlands Planning Scheme was adopted by Redland Shire Council on 15 March 2006 and its notification was published in the Queensland Government Gazette on 24 March 2006.

(4) The Redlands Planning Scheme has effect from 30 March 2006.

1.1.2 Application of the Redlands Planning Scheme

(1) The Redlands Planning Scheme applies to the planning scheme area including all premises, roads and waterways.

Note -

Diagram 1 - Graphical Representation of the Planning Scheme Area shows the extent of all cadastral properties in the Redland local government area. The Diagram does not identify the extent of the planning scheme area. Refer to Part 9 - Schedules, Schedule 3 - Definitions, Division 2 - Administrative Terms for the full definition of planning scheme area.

(2) For the purposes of the Redlands Planning Scheme reference to -

(a) NSI - means North Stradbroke Island;

(b) SMBI - means Southern Moreton Bay Islands.

1.1.3 Purpose of the Redlands Planning Scheme

(1) The purpose of the Redlands Planning Scheme is to provide a framework for managing development in a way that advances the purpose of the *Integrated Planning Act 1997* (IPA)[1.1] by -

(a) identifying -
- (i) exempt development,
- (ii) self-assessable development;
- (iii) assessable development, being either code or impact.

(b) identifying outcomes sought in the planning scheme area through -
- (i) Desired Environmental Outcomes;
- (ii) Overall Outcomes for a Code;
- (iii) Specific Outcomes for assessable development;
- (iv) Acceptable Solutions for self-assessable development.

[1.1] The purpose of the IPA is to seek to achieve ecological sustainability by (a) coordinating and integrating planning at the local, regional and State levels; (b) managing the process by which development occurs; (c) managing the effects of development on the environment (including managing the use of premises).

1.1.4 Relationship to *Integrated Planning Act 1997* (IPA)

(1) The Redlands Planning Scheme functions as part of IDAS[1.2] and must be read together with the IPA.

(2) The Redlands Planning Scheme regulates the following aspects of development as defined by the IPA -

(a) making a material change of use of premises;

(b) development other than a material change of use of premises including -
(i) carrying out building work;
(ii) carrying out operational work;
(iii) reconfiguring a lot.

(3) For the purposes of the Redlands Planning Scheme -

(a) making a material change use of premises is referred to by the term 'uses';

(b) development other than a material change of use of premises is referred to by the term 'other development'.

(4) The Redlands Planning Scheme is to be read in conjunction with the *South East Queensland Regional Plan 2005 - 2026*.

1.1.5 Relationship to *Native Title Act 1993*

(1) Redland City Council recognises the rights of Aboriginal traditional owners to use land and water in Redland City according to their traditional laws and customs, in accordance with the provisions of the *Native Title Act 1993*.

(2) Redland City Council also recognises and acknowledges the rights of Aboriginal traditional owners to be consulted in accordance with the provisions of the *Native Title Act 1993* about decisions or activities that could affect their enjoyment of native title rights and interests, or which may impinge upon their custodial obligations.

(3) Redland City Council acknowledges that any decisions made under the determination of the *Native Title Act 1993* will be reviewed by the local government and amendment made to the Redlands Planning Scheme where explicitly required.

[1.2] IDAS - integrated development assessment system - is the system detailed in Chapter 3 of the IPA for integrating state and local government assessment processes for development.

Diagram 1 - Graphical Representation of the Planning Scheme Area

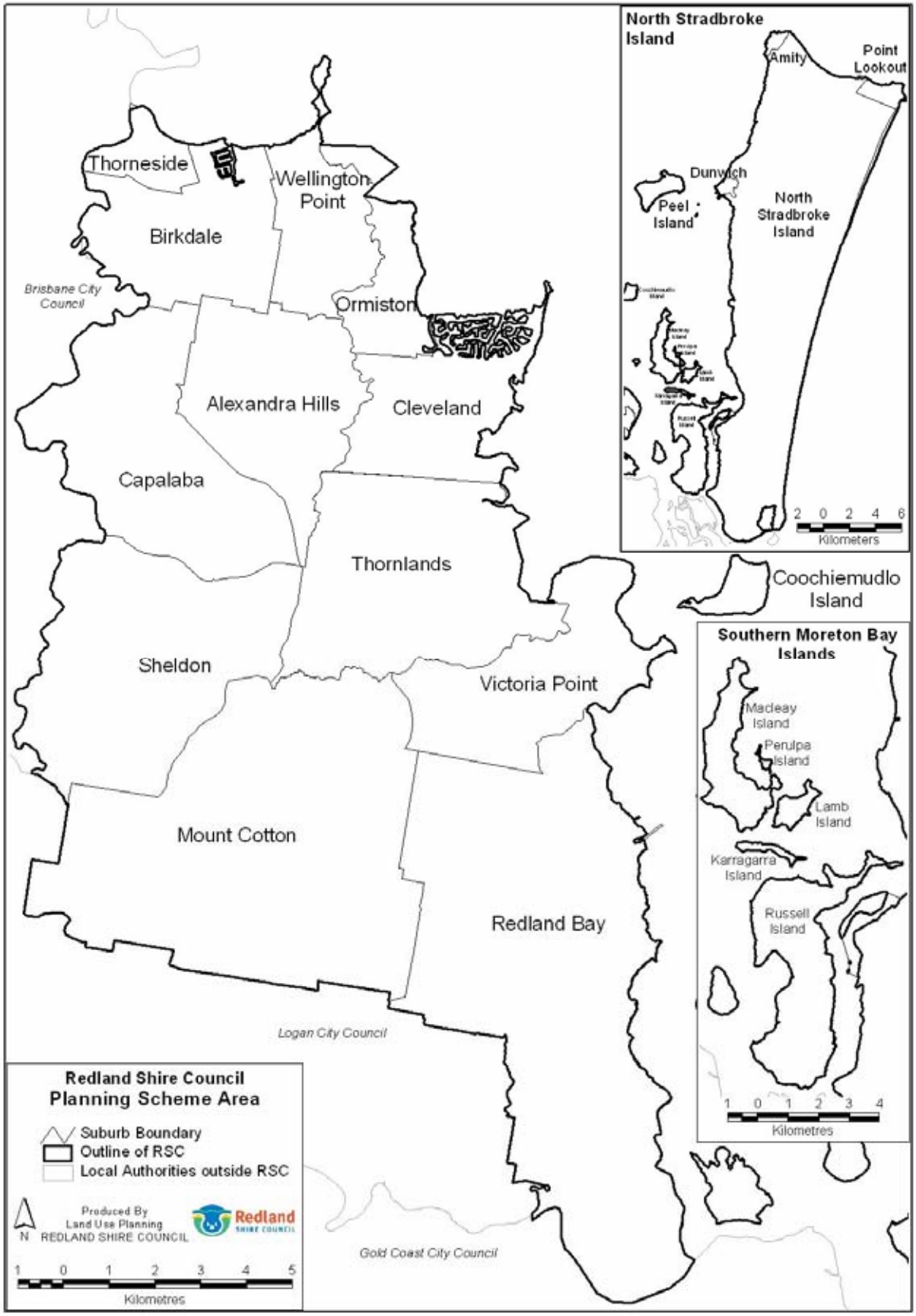

Introduction

this page purposely left blank

Division 2 - Planning Scheme Structural Elements

1.2.1 Redlands Planning Scheme Seeks to Achieve Outcomes

(1) The Redlands Planning Scheme seeks to achieve outcomes that are identified according to the following levels -

(a) Desired Environmental Outcomes -
(i) There are six (6) desired environmental outcomes detailed in Part 3 that address the following matters -
a. Natural Environment;
b. Character and Identity;
c. Community Health and Wellbeing;
d. Access and Mobility;
e. Essential Services;
f. Economic Development;

(b) Overall Outcomes that are the purpose of a Code;

(c) Specific Outcomes that contribute to achieving the Overall Outcomes and are the outcomes by which code or impact assessable development are assessed;

(d) Probable Solutions that are prescriptive requirements and provide a guide to achieving Specific Outcomes;

(e) Acceptable Solutions that are prescriptive requirements for self-assessable development.

1.2.2 Redlands Planning Scheme has Zones

(1) The Redlands Planning Scheme divides the planning scheme area into twenty-four (24) zones.

(2) Some zones incorporate sub-areas.

(3) The zones and sub-areas are identified on the zone maps.

(4) The zones and sub-areas are as follows -

(a) the Commercial Industry Zone including -
(i) sub-area CM1 - Capalaba identified on zone maps as CM1.

(b) the Community Purposes Zone including -
(i) sub-area CP1 - Cemetery identified on zone maps as CP1;
(ii) sub-area CP2 - Community Facility identified on zone maps as CP2;
(iii) sub-area CP3 - Educational Facility identified on zone maps as CP3;
(iv) sub-area CP4 - Emergency Services identified on zone maps as CP4;
(v) sub-area CP5 - Hospital identified on zone maps as CP5;
(vi) sub-area CP6 - Place of Worship identified on zone maps as CP6;
(vii) sub-area CP7 - Infrastructure identified on zone maps as CP7;
(viii) sub-area CP8 - Future Transport/Greenspace/Trail Corridor identified on zone maps as CP8;
(ix) sub-area CP9 - Future Island Industry Investigation Area identified on zone maps as CP9;
(x) sub-area CP10 - Future land sale/exchange identified on zone maps as CP10;
(xi) sub-area CP11 - Commonwealth Facilities - Radio Receivers identified on zone maps as CP11;
(xii) sub-area CP12 - Future Integrated Transport and Marine Facilities identified on zone maps as CP12.

(c) the Conservation Zone including -
  (i) sub-area CN1 - Environmental and Drainage Constrained Land identified on zone maps as CN1;
  (ii) sub-area CN2 - Nature Based Recreation identified on zone maps as CN2.

(d) the District Centre Zone.

(e) the Emerging Urban Community Zone.

(f) the Environmental Protection Zone.

(g) the General Industry Zone including -
  (i) sub-area GL1 - Cleveland identified on zone maps as GL1;
  (ii) sub-area GL2 - Cleveland identified on zone maps as GL2.

(h) the Investigation Zone.

(i) the Island Industry Zone including -
  (i) sub-area IS1 - Russell Island, Amity Point and Point Lookout on North Stradbroke Island identified on zone maps as IS1.

(j) the Local Centre Zone including -
  (i) sub-area LC1 - Southern Moreton Bay Islands and Amity Point on North Stradbroke Island identified on zone maps as LC1.

(k) the Low Density Residential Zone.

(l) the Major Centre Zone including -
  (i) sub-area MC1 - Capalaba identified on zone maps as MC1;
  (ii) sub-area MC2 - Capalaba identified on zone maps as MC2;
  (iii) sub-area MC3 - Cleveland - Bloomfield Street and surrounds identified on zone maps as MC3;
  (iv) sub-area MC4 - Cleveland - Harbour Precinct identified on zone maps as MC4;
  (v) sub-area MC5 - Cleveland - Cleveland Railway Station Precinct identified on zone maps as MC5;
  (vi) sub-area MC6 - Cleveland - Performing Arts Precinct identified on zone maps as MC6;
  (vii) sub-area MC7 - Cleveland - Waterloo Street, Russell Street, Bloomfield Street and Ross Court identified on zone maps as MC7;
  (viii) sub-area MC8 - Cleveland - Waterloo Street, Ross Court, Bloomfield Street and Princess Street identified on zone maps as MC8;
  (ix) sub-area MC9 - Victoria Point - North of Bunker Road identified on zone maps as MC9;
  (x) sub-area MC10 - Victoria Point - Corner of Colburn Avenue and Cleveland/Redland Bay Road identified on zone maps as MC10;
  (xi) sub-area MC11 - Victoria Point - East of Cleveland/Redland Bay Road identified on zone maps as MC11;
  (xii) sub-area MC12 - Victoria Point - South of Bunker Road on Cleveland/Redland Bay Road identified on zone maps as MC12.

(m) the Marine Activity Zone including -
  (i) sub-area MA1 - Toondah Harbour and Weinam Creek identified on zone maps as MA1;
  (ii) sub-area MA2 - Beveridge Road identified on zone maps as MA2;
  (iii) sub-area MA3 - Dunwich on Northern Stradbroke Island identified on zone maps as MA3.

(n) the Medium Density Residential Zone including -
  (i) sub-area MDR1 - Multiple locations and identified on zone maps as MDR1;
  (ii) sub-area MDR2 - Kingston Avenue at Alexandra Hills identified on zone maps as MDR2.
  (iii) sub-area MDR3 - Salisbury Street at Redland Bay identified on zone maps as MDR3.

(o) the Neighbourhood Centre Zone including -
  (i) sub-area NC1 - Mount Cotton Village and Colburn Avenue at Victoria Point identified on zone maps as NC1;
  (ii) sub-area NC2 - Redland Bay identified on zone maps as NC2;
  (iii) sub-area NC3 - Redland Bay Hotel identified on zone maps as NC3.

(p) the Open Space Zone.

(q) the Park Residential Zone.

(r) the Point Lookout Centre Zone.

(s) the Point Lookout Residential Zone.

(t) the Point Lookout Tourist Zone including -
- (i) sub-area PT1 - East Coast Road identified on zone maps as PT1;
- (ii) sub-area PT2 - East Coast Road identified on zone maps as PT2;
- (iii) sub-area PT3 - Point Lookout Hotel identified on zone maps as PT3;
- (iv) sub-area PT4 - Mooloomba Road identified on zone maps as PT4;
- (v) sub-area PT5 - Mooloomba Road identified on zone maps as PT5;
- (vi) sub-area PT6 - Samarinda Drive identified on zone maps as PT6;
- (vii) sub-area PT7 - George Nothling Drive identified on zone maps as PT7.

(u) the Rural Non-Urban Zone including -
- (i) sub-area RN1 - Redland Bay Road at Capalaba identified on zone maps as RN1;
- (ii) sub-area RN2 - Main Road at Wellington Point identified on zone maps as RN2;
- (iii) sub-area RN3 - Southern Moreton Bay Islands identified on zone maps as RN3.

(v) the Southern Moreton Bay Islands (SMBI) Centre Zone including -
- (i) sub-area SC1 - Russell Island identified on zone maps as SC1.

(w) the Southern Moreton Bay Islands (SMBI) Residential Zone including -
- (i) sub-area SR1 - Multiple locations across SMBI and identified on zone maps as SR1.

(x) the Urban Residential Zone including -
- (i) sub-area UR1 - Multiple locations and identified on zone maps as UR1;
- (ii) sub-area UR2 - Mount Cotton Village identified on zone maps as UR2;
- (iii) sub-area UR3 - Amity on North Stradbroke Island and identified on zone maps as UR3.

1.2.3 Redlands Planning Scheme has Overlays

(1) The Redlands Planning Scheme has thirteen (13) overlays.

(2) The planning scheme area affected by overlays is identified on the overlay maps.

(3) One or more overlays may affect the lot or premises.

(4) The overlays are as follows -

(a) Acid Sulfate Soils as shown on Acid Sulfate Soils Overlay maps -
- (i) Sheet 1 of 2 - Mainland;
- (ii) Sheet 2 of 2 - North Stradbroke Island and Southern Moreton Bay Islands.

(b) Air Space and Aviation Facilities as shown on Air Space and Aviation Facilities Overlay maps -
- (i) Sheet 1 of 2 - Mainland;
- (ii) Sheet 2 of 2 - North Stradbroke Island.

(c) Bushfire Hazard as shown on Bushfire Hazard Overlay maps -
- (i) Sheet 1 of 2 - Mainland;
- (ii) Sheet 2 of 2 - North Stradbroke Island and Southern Moreton Bay Islands.

(d) Electricity Infrastructure as shown on Electricity Infrastructure Overlay maps -
- (i) Sheet 1 of 2 - Mainland;
- (ii) Sheet 2 of 2 - Southern Moreton Bay Islands – Russell Island.

(e) Extractive Resources as shown on Extractive Resource Overlay maps -

(i) Sheet 1 of 2 - Mainland;
(ii) Sheet 2 of 2 - North Stradbroke Island.

(f) Flood Prone, Storm Tide and Drainage Constrained Land as shown on Flood Prone, Storm Tide and Drainage Constrained Land Overlay maps -
(i) Sheet 1 of 2 - Mainland;
(ii) Sheet 2 of 2 - North Stradbroke Island and Southern Moreton Bay Islands.

(g) Habitat Protection as shown on -
(i) State Koala Policy Overlay map;
a. Sheet 1 of 1 - Mainland;
(ii) Bushland Habitat Overlay map;
a. Sheet 1 of 1 - Mainland.

(h) Heritage Place and Character Precinct as shown on Heritage Place and Character Precinct Overlay maps -
(i) Sheet 1 of 2 - Mainland;
(ii) Sheet 2 of 2 - North Stradbroke Island and Southern Moreton Bay Islands.

(i) Protection of the Poultry Industry as shown on Protection of the Poultry Industry Overlay map -
(i) Sheet 1 of 1 - Mainland.

(j) Road and Rail Noise Impacts as shown on Road and Rail Noise Impacts Overlay maps -
(i) Sheet 1 of 2 - Mainland;
(ii) Sheet 2 of 2 - North Stradbroke Island and Southern Moreton Bay Islands.

(k) Water Supply Catchments as shown on Water Supply Catchments Overlay maps -
(i) Sheet 1 of 2 - Mainland;
(ii) Sheet 2 of 2 - North Stradbroke Island.

(l) Waterways, Wetlands and Moreton Bay as shown on Waterways, Wetlands and Moreton Bay Overlay maps -
(i) Sheet 1 of 2 - Mainland;
(ii) Sheet 2 of 2 - Southern Moreton Bay Islands.

(m) Landslide Hazard as shown on Landslide Hazard Overlay maps -
(i) Sheet 1 of 2 - Mainland;
(ii) Sheet 2 of 2 - North Stradbroke Island and Southern Moreton Bay Islands.

1.2.4 Zones for Roads, Waterways and Reclaimed Land

(1) If a road, waterway[1.3] or reclaimed land in the planning scheme area is not shown as being covered by a zone on the zone maps, the following applies -

(a) if the road, waterway or reclaimed land is adjoined on both sides by land in the same zone it has the same zoning as the adjoining land; or

(b) if the road, waterway or reclaimed land is adjoined on one side by land in a zone and adjoined on the other side by land in another zone -
(i) it has the same zoning as the adjoining land;
(ii) the centre line of the road or waterway is the boundary between the two zones; or

(c) if the road, waterway or reclaimed land is adjoined on one side only by land in a zone - the entire road, waterway or reclaimed land has the same zoning as the adjoining zoned land.

(2) If a road, waterway or reclaimed land is not shown as being covered by a sub-area on the zone maps, subsection (1) applies.

[1.3] For the purposes of the Redlands Planning Scheme waterways incorporate watercourses as defined in the *Water Act 2000.*

(3) To remove any doubt, subsections (1) and (2) also apply to a closed road if the road is closed after the commencement of the Redlands Planning Scheme.

1.2.5 Determining the Level of Assessment of Development

(1) Under the IPA all development is exempt unless it is self-assessable or assessable.

(2) Schedule 8 of the IPA identifies development that, for the purpose of the Act, is exempt, self-assessable or assessable.

(3) In addition to the IPA, the Redlands Planning Scheme identifies development that is exempt, self-assessable or assessable.

(4) To determine whether an application is required to carry out development, Schedule 8 of IPA and the Redlands Planning Scheme must be considered.

(5) Exempt development does not have to comply with the Redlands Planning Scheme.

(6) The tables of assessment for the zones and overlays establish the level of assessment, being exempt, self-assessable or code or impact assessable, as follows -

(a) zone tables of assessment for -
  (i) material change of use of premises;
  (ii) other development not associated with a material change of use of premises;

(b) overlay tables of assessment for -
  (i) material change of use of premises;
  (ii) other development not associated with a material change of use of premises.

(7) Zone tables of assessment are as follows -

(a) sections 4.1.4 and 4.1.5 - Commercial Industry Zone;
(b) sections 4.2.4 and 4.2.5 - Community Purposes Zone;
(c) sections 4.3.4 and 4.3.5 - Conservation Zone;
(d) sections 4.4.4 and 4.4.5 - District Centre Zone;
(e) sections 4.5.4 and 4.5.5 - Emerging Urban Community Zone;
(f) sections 4.6.4 and 4.6.5 - Environmental Protection Zone;
(g) sections 4.7.4 and 4.7.5 - General Industry Zone;
(h) sections 4.8.4 and 4.8.5 - Investigation Zone;
(i) sections 4.9.4 and 4.9.5 - Island Industry Zone;
(j) sections 4.10.4 and 4.10.5 - Local Centre Zone;
(k) sections 4.11.4 and 4.11.5 - Low Density Residential Zone;
(l) sections 4.12.4 and 4.12.5 - Major Centre Zone;
(m) sections 4.13.4 and 4.13.5 - Marine Activity Zone;
(n) sections 4.14.4 and 4.14 5 - Medium Density Residential Zone;
(o) sections 4.15.4 and 4.15.5 - Neighbourhood Centre Zone;
(p) sections 4.16.4 and 4.16.5 - Open Space Zone;
(q) sections 4.17.4 and 4.17.5 - Park Residential Zone;
(r) sections 4.18.4 and 4.18.5 - Point Lookout Centre Zone;
(s) sections 4.19.4 and 4.19.5 - Point Lookout Residential Zone;
(t) sections 4.20.4 and 4.20.5 - Point Lookout Tourist Zone;
(u) sections 4.21.4 and 4.21.5 - Rural Non-Urban Zone;
(v) sections 4.22.4 and 4.22.5 - Southern Moreton Bay Islands (SMBI) Centre Zone;
(w) sections 4.23.4 and 4.23.5 - Southern Moreton Bay Islands (SMBI) Residential Zone;
(x) sections 4.24.4 and 4.24.5 - Urban Residential Zone.

(8) Overlay tables of assessment are as follows -

(a) sections 5.1.4 and 5.1.5 - Acid Sulfate Soils Overlay;
(b) sections 5.2.4 and 5.2.5 - Air Space and Aviation Facilities Overlay;
(c) sections 5.3.4 and 5.3.5 - Bushfire Hazard Overlay;
(d) sections 5.4.4 and 5.4.5 - Extractive Resources Overlay;

(e) sections 5.5.4 and 5.5.5 - Electricity Infrastructure Overlay;
(f) sections 5.6.4 and 5.6.5 - Flood Prone, Storm Tide and Drainage Constrained Land Overlay;
(g) sections 5.7.4 and 5.7.5 - Habitat Protection Overlay;
(h) sections 5.8.4 and 5.8.5 - Heritage Place and Character Precinct Overlay;
(i) sections 5.9.4 and 5.9.5 - Protection of the Poultry Industry Overlay;
(j) sections 5.10.4 and 5.10.5 - Road and Rail Noise Impacts Overlay;
(k) sections 5.11.4 and 5.11.5 - Water Supply Catchments Overlay;
(l) sections 5.12.4 and 5.12.5 - Waterways, Wetlands and Moreton Bay Overlay.
(m) sections 5.13.4 and 5.13.5 – Landslide Hazard Overlay.

(9) For zones -

(a) a material change of use of premises is impact assessable where -
  (i) a use is defined in Schedule 3 - Dictionary, Division 1 - Uses and is not listed in column 1 of the zone tables of assessment; or
  (ii) a use is defined in Schedule 3 - Dictionary, Division 1 - Uses and listed in column 1 of the zone tables of assessment but does not meet the level of assessment qualifications in column 2 of the Zone Tables of Assessment; or
  (iii) a use is not defined in Schedule 3 - Dictionary, Division 1 - Uses;

(b) other development not associated with a material change of use of premises is exempt where it is not listed in column 1 of the zone tables of assessment;

(c) for the purpose of determining levels of assessment zone boundaries are a fixed line;

(d) where development is proposed on premises with more than one zoning, the level of assessment is that applicable to the zone in which the proposed development is located;

(e) where development is proposed in more than one zone and consequently is subject to more than one level of assessment, the highest level of assessment applies except in the circumstance as defined in (f) below;

(f) where access is provided as part of a material change of use of premises, and the provision of that access is located in a zone which has a higher level of assessment than would otherwise apply to the use, the level of assessment applicable to the provision of access is the same as the level of assessment applicable to the use;

(g) uses and other development which is generally considered inappropriate and not preferred in a zone -
  (i) is identified as inconsistent within each zone code and is impact assessable;
  (ii) includes High Impact Industry, and the type of advertising devices listed in Specific Outcome S1(1) of the Advertising Devices Code in all zones;
  (iii) indicates the local government's policy position that the nature and operational characteristics of the development and its potential impacts are inappropriate and inconsistent with the purpose of the zone, assessment criteria of relevant codes and the Desired Environmental Outcomes.

(10) For overlays -

(a) a material change of use of premises is exempt where the use is defined in Schedule 3 - Dictionary, Division 1 - Uses and is not listed in column 1 of the overlay tables of assessment;

(b) a material change of use of premises is code assessable where the use is not defined in Schedule 3 - Dictionary, Division 1 - Uses;

(c) other development not associated with a material change of use of premises is exempt where it is not listed in column 1 of the overlay tables of assessment;

(d) a lot or premises is affected by an overlay whether it is covered completely or only in part by that overlay;

(e) the provisions of the overlay, including the level of assessment, apply to the whole of the affected lot or premises;

(f) if development is identified as having a different level of assessment under a zone than under an overlay, or under different overlays, the highest level of assessment applies as follows -
   (i) self-assessable prevails over exempt;
   (ii) code assessable prevails over self-assessable or exempt;
   (iii) impact assessable prevails over code assessable, self-assessable, or exempt.

Table 1 – Explanation of Zone and Overlay Highest Level of Assessment

Zone Level of Assessment	Overlay Level of Assessment		
	Exempt	Self-Assessable	Code
Exempt	Exempt	Self-Assessable	Code
Self-Assessable	Self-Assessable	Self-Assessable	Code
Code	Code	Code	Code
Impact	Impact	Impact	Impact

1.2.6 Determining Assessment Criteria for Development

(1) Assessment Criteria for -

(a) self-assessable development -
   (i) are all the Acceptable Solutions for the relevant use or other development as listed in column 3 of the zone or overlay tables of assessment;
   (ii) that does not comply with all the Acceptable Solutions of the applicable codes, is code or impact assessable development as detailed in column 2 of the zone or overlay tables of assessment;

(b) code assessable development are all the applicable codes for the relevant use or other development as listed in column 3 of the zone or overlay tables of assessment;

(c) impact assessable development are all relevant provisions of the Redlands Planning Scheme.

1.2.7 Types and Names of Codes

(1) There are codes for -

(a) each zone (zone codes);
(b) each overlay (overlay codes);
(c) a number of defined uses (use codes);
(d) each type of other development (other development codes);
(e) general (general codes).

(2) The zone codes are the following -

(a) Commercial Industry Zone;
(b) Community Purposes Zone;
(c) Conservation Zone;
(d) District Centre Zone;
(e) Emerging Urban Community Zone;
(f) Environmental Protection Zone;
(g) General Industry Zone;

(h) Island Industry Zone;
(i) Investigation Zone;
(j) Local Centre Zone;
(k) Low Density Residential Zone;
(l) Major Centre Zone;
(m) Marine Activity Zone;
(n) Medium Density Residential Zone;
(o) Neighbourhood Centre Zone;
(p) Open Space Zone;
(q) Park Residential Zone;
(r) Point Lookout Centre Zone;
(s) Point Lookout Residential Zone;
(t) Point Lookout Tourist Zone;
(u) Rural Non-Urban Zone;
(v) Southern Moreton Bay Islands (SMBI) Centre Zone;
(w) Southern Moreton Bay Islands (SMBI) Residential Zone;
(x) Urban Residential Zone.

(3) The overlay codes are the following -

(a) Acid Sulfate Soils Overlay;
(b) Airspace and Aviation Facilities Overlay;
(c) Bushfire Hazard Overlay;
(d) Electricity Infrastructure Overlay;
(e) Extractive Resources Overlay;
(f) Flood Prone, Storm Tide and Drainage Constrained Land Overlay;
(g) Habitat Protection Overlay;
(h) Heritage Place and Character Precinct Overlay;
(i) Protection of the Poultry Industry Overlay;
(j) Road and Rail Noise Impacts Overlay;
(k) Water Supply Catchments Overlay;
(l) Waterways, Wetlands and Moreton Bay Overlay.
(m) Landslide Hazard Overlay

(4) The use codes are the following -

(a) Aged Persons and Special Needs Housing;
(b) Agriculture;
(c) Animal Keeping;
(d) Apartment Building;
(e) Bed and Breakfast;
(f) Caretakers Dwelling;
(g) Child Care Centre;
(h) Display Dwelling;
(i) Drive Through Restaurant;
(j) Dual Occupancy;
(k) Dwelling House;
(l) Estate Sales Office;
(m) Extractive Industry;
(n) Forestry;
(o) Home Business;
(p) Intensive Agriculture;
(q) Mobile Home Park;
(r) Multiple Dwelling;
(s) Outdoor Dining;
(t) Park;
(u) Relatives Apartment;
(v) Roadside Stall;
(w) Rural Enterprise;
(x) Service Station;
(y) Small Lot House;
(z) Telecommunications Facility;
(aa) Temporary Use;

(bb) Tourist Accommodation;
(cc) Tourist Park.

(5) The other development codes are the following -

(a) Advertising Devices;
(b) Communications Structures;
(c) Domestic Additions;
(d) Domestic Driveway Crossover;
(e) Domestic Outbuilding;
(f) Excavation and Fill;
(g) On-Site Raising and Relocation;
(h) Private Swimming Pool;
(i) Private Tennis Court;
(j) Private Waterfront Structures;
(k) Reconfiguration.

(6) The general codes are the following -

(a) Access and Parking;
(b) Centre Activity;
(c) Centre Design;
(d) Commercial Industry Activity;
(e) Development Near Underground Infrastructure;
(f) Erosion Prevention and Sediment Control;
(g) Infrastructure Works;
(h) Landscape;
(i) Stormwater Management.

1.2.8 Codes Applicable to Ongoing Use

(1) A code that is applicable to a material change of use is also applicable to the ongoing use that results from that change[1.4].

1.2.9 Probable Solutions for Code Assessable Development

(1) A probable solution for a specific outcome provides a guide to achieving that specific outcome in whole or in part, and does not limit the assessment manager's discretion under the IPA[1.5] to impose conditions on a development approval.

1.2.10 Designation of Land for Community Infrastructure

(1) Land designated for Community Infrastructure pursuant to Chapter 2, Part 6 - Designation of Land for Community Infrastructure of the IPA within Redland City is listed in Schedule 2 - Community Infrastructure.

(2) Development under a designation is exempt development, to the extent the development is either, or both, of the following -

(a) self-assessable development or assessable development under the Redlands Planning Scheme;
(b) the reconfiguration of a lot.

[1.4] The IPA, section 2.1.23 (Local planning instruments have force of law) relates with respect to regulating the use of premises, and also the IPA, section 4.3.4 (Compliance with identified code for use of premises) with respect to an offence under the Act.
[1.5] The IPA, chapter 3 - Integrated Development Assessment System (IDAS), Part 5 - Decision stage, Division 6 Conditions.

this page purposely
left blank

Part 2 - Interpretation

Division 1 - Interpretation

2.1.1 The Dictionary

(1) The dictionary in Schedule 3 defines particular words used in the Redlands Planning Scheme and is divided into the following two divisions -

(a) Division 1 - Uses;

(b) Division 2 - Administrative Terms.

2.1.2 Uses

(1) Unless expressly provided otherwise, a use is taken to exclude any other use defined in the dictionary.

(2) Any question as to whether a use or proposed use falls within a definition in the dictionary will be determined by the local government.

2.1.3 Terms defined in the *Integrated Planning Act 1997* (IPA)

(1) Administration terms used in the Redlands Planning Scheme which are not defined in Schedule 3 – Dictionary but are defined in IPA have the meaning defined in IPA unless the context in which the term appears otherwise requires.

2.1.4 Standard Drawings, Notes, Diagrams and Maps

(1) Standard drawings contained in Codes or Schedules are part of the Redlands Planning Scheme and therefore have the force of law.

(2) Standard drawings are identified in the Redlands Planning Scheme by the title 'Standard Drawing'.

(3) Maps provide graphical information to support Desired Environmental Outcomes, Specific Outcomes or Probable Solutions of the Redlands Planning Scheme and therefore have the force of law.

(4) Maps are identified in the Redlands Planning Scheme by the title 'Map'.

(5) Notes and Diagrams are declared extrinsic material under the *Statutory Instruments Act 1992*, *section 15* and are provided to assist in the interpretation of the Redlands Planning Scheme, they do not have the force of law.

(6) Notes are identified within the Redlands Planning Scheme by the title 'Note', alternatively notes may be identified by a footnote.

(7) Diagrams are identified in the Redlands Planning Scheme by the title 'Diagram' and include illustrations to provide advice or guidance.

2.1.5 How to read the Tables of Assessment and Assessment Criteria

(1) For the purpose of the Redlands Planning Scheme -
  (a) a list of items separated by a semi-colon (;) means the items on the list are joined by 'and' and must all be addressed;

Example 1 - Table of Assessment	*Example 1 - Assessment Criteria*
Code Assessable If - (1) Not self-assessable; (2) The building height is 8.5 metres or less.	(1) Uses and other development are - (a) orientated towards the street; (b) designed to ensure casual surveillance opportunities.
This means both parts are joined and both must be complied with.	

  (b) where a semi-colon (;) is followed by 'or' to separate a list of items, alternatives are available;

Example 2 - Tables of Assessment	*Example 2 - Assessment Criteria*
Code Assessable If - (1) In sub-area - (a) UR 1; or (b) UR 2.	(1) The domestic outbuilding is located a minimum of - (a) 1.5 metres from a side or rear boundary; or (b) 3 metres from a side or rear boundary, where opening onto a habitable room of an adjoining dwelling unit.
This means either one of the two items applies	

  (c) where some items in a list are separated by a semi-colon (;) meaning 'and' and other items on the list are separated by a semi-colon (;) followed by 'or' meaning 'or' some items on the list are joined but some alternatives are available.

Example 3 - Tables of Assessment	*Example 3 - Assessment Criteria*
Code Assessable - If - (1) The building height is 8.5 metres or less; (2) In sub-area - (a) UR 1; or (b) UR 2.	(1) Communications structures - (a) are located behind the front building line; (b) have a maximum diameter of - (i) 1.2 metres in the zones listed; or (ii) 2 metres in all other zones.
This means either (1) and (2)(a) are joined and must be addressed or (1) and (2)(b) are joined and must be addressed.	*This means either (1)(a) and (1)(b)(i) are joined and must be addressed or (1)(a) and (1)(b)(ii) are joined and must be addressed.*

(2) In the circumstance of Assessment Criteria -
  (a) the rules detailed in (1)(a),(b) and (c) apply to all Acceptable Solutions and Probable Solutions;
  (b) in addition to these rules, Specific Outcomes may contain a number of outcomes that do not apply to all development. If doubt exists consult with the local government.

Example 4 - Specific Outcomes
(1) Layout and design enhances built form of the surrounding streetscape by - (a) contributing to the establishment of an attractive streetscape in new areas; (b) ensuring the use addresses the street frontage;
This means (a) only applies in newly establishing areas, while (b) and any remaining outcomes apply to development regardless of its being in a newly establishing area or an established area.

Part 3 – Desired Environmental Outcomes

Division 1 - Desired Environmental Outcomes

3.1.1 Introduction

(1) The desired environmental outcomes (DEOs) seek to achieve ecological sustainability as defined by the IPA and are the basis for the measures contained in this and subsequent parts of the Redlands Planning Scheme.

(2) Each of the DEOs are sought to be achieved, or at a very least not compromised to the extent practicable having regard to each of the other DEOs, during the life of the Redlands Planning Scheme.

(3) The effective life of the Redlands Planning Scheme is a period of 8 years from the date of commencement. The DEOs will form the basis for a review of the performance of the Scheme at this time.

(4) There are six DEOs which relate to -

(a) Natural Environment;

(b) Character and Identity;

(c) Community Health and Well being;

(d) Access and Mobility;

(e) Essential Services;

(f) Economic Development.

3.1.2 Desired Environmental Outcome No. 1 - Natural Environment

(1) Redland City's environmental values and natural resources are managed in a sustainable manner to maintain biodiversity, ecological processes and community well being by ensuring development -

(a) protects and enhances -
  (i) a wide range of natural ecosystems including -
    a. internationally recognised coastal wetland habitats including all areas identified under the JAMBA and CAMBA bilateral agreements for the protection of Migratory Birds in Danger of Extinction and their Environment such as Eighteen Mile Swamp on North Stradbroke island, the Point O'Halloran Wetlands and Egret Drive Wetlands in Victoria Point, the Melaleuca Wetlands on Coochiemudlo Island, the Geoff Skinner Reserve in Wellington Point and the Black Swamp in Cleveland;
    b. remnant ecosystems predominantly in the southern areas of the mainland, on North Stradbroke Island and on the Southern Moreton Bay Islands;
    c. areas where there are opportunities for environmental enhancement activities to support significant ecosystems and also provide natural corridor linkages between conservation areas;
    d. waterways such as Tingalpa, Hilliards and Eprapah Creeks and Moreton Bay;
    e. koala habitats including the Koala Coast Conservation Area, Koala Sustainability Area and Urban Koala Areas;
    f. locally significant patches, corridors and mosaics of bushland that support wildlife throughout the City.

(ii) species of native fauna and flora that range from internationally to locally significant and threatened to common species including -
  a. native species of national and state significance that occur naturally in the City such as the lesser swamp orchid, glossy black cockatoo and false water rat;
  b. iconic species of threatened native fauna and flora including the koala and the koala conservation areas.

(b) maintains the health of the City's natural drainage systems, water catchments and Moreton Bay, by -
  (i) incorporating stormwater, erosion and siltation management systems which contribute to the maintenance or improvement of water quality;
  (ii) avoiding the placement of fill or other potentially damaging activities within flood plains and areas subject to tidal inundation;
  (iii) protecting the water quality of the City's potable water supply including the Leslie Harrison Catchment and the North Stradbroke Island aquifer recharge area by restricting incompatible development;
  (iv) minimising the disturbance of acid sulphate soils.

(c) comprehensively assesses and effectively manages the individual and cumulative and direct and indirect impacts on the environmental values of the City;

(d) manages wastes, emissions and pollution sources to within acceptable environmental limits;

(e) minimises the adverse impacts of natural hazards (flood, bushfire and landslide) on environmental values and the Redland Community.

3.1.3 Desired Environmental Outcome No. 2 - Character and Identity

(1) Redland City's unique character and identity is protected and strengthened by -

(a) ensuring the significant natural landform and landscape features of the City are protected and retained from incompatible development, such significant features include -
  (i) the regionally significant environmental and scenic resource of Daisy Hill, Mount Cotton and the Tingalpa Creek Corridor which provides vegetated linkages between Redland City, Brisbane and Logan cities;
  (ii) the landscape and scenic amenity of the rural and bushland areas to the south of Duncan Road and Boundary Road which provide a dramatic contrast to the urban areas to the north and east;
  (iii) the green backdrop to Moreton Bay provided by the Southern Moreton Bay Islands and North Stradbroke Island;
  (iv) the coastal foreshores and waterways including the Tingalpa, Hilliards, Eprapah and Moogurrapum Creek systems.

(b) ensuring a compact urban form and pattern of development that maintains and enhances the identifiable coastal, hinterland and island communities with each -
  (i) separated by greenspace;
  (ii) displaying a sense of place and character;
  (iii) being provided with local services, useable green spaces and access to public transport within commuter walking distance of dwelling units;
  (iv) incorporating a building height, scale and range of residential uses that reflect the local context and locational characteristics.

(c) restricting the range of uses undertaken within the Emerging Urban Community Zone to maintain the land's low intensity and open character until such time as structure plans are prepared and managed by Redland City Council, in partnership with landowners, stakeholders and the community;

(d) ensuring no further expansion of urban development outside of those areas included in the urban footprint under the South East Queensland Regional Plan and zoned for urban purposes under this planning scheme;

(e) ensuring the prevailing character of the City comprising of its bayside location, low to medium density development and the scenic coastal landscapes are enhanced and protected;

(f) protecting cultural heritage places and precincts;

(g) promoting a range of housing densities and opportunities for medium density housing development in areas with good access to services and transport;

(h) encouraging good urban design in both private and public development throughout the City and close integration in design between private and publicly owned land.

3.1.4 Desired Environmental Outcome No. 3 - Community Health and Wellbeing

(1) As a vibrant and attractive place to live, Redland City offers its community a high level of amenity, social cohesion and diversity and a range of facilities and activities through -

(a) facilitating the development of neighbourhoods with a mix of dwelling types, sizes and styles which meet the needs of the City's existing and future households;

(b) ensuring the development of housing to meet the special needs of youth and older people and people with disabilities is integrated in residential areas and located in proximity to essential services and public transport;

(c) maximising the efficient use of land within the urban footprint to encourage a range of affordable housing options;

(d) requiring the provision of an adequate standard and capacity of services and amenities in all local communities throughout the City;

(e) ensuring new areas of urban development incorporate the integrated and timely provision of an adequate standard and capacity of services, community facilities and amenities to meet future community needs;

(f) focusing retail, commercial and community facilities at centres which maximise their accessibility to the City's population;

(g) increasing levels of self-containment within the City in terms of employment and services while recognising an on going dependence on other areas outside the City for employment and high level services;

(h) ensuring quality, useable open space adequate to accommodate the diverse recreational needs of the City's residents and visitors is provided and maintained;

(i) ensuring development is responsive to local climatic conditions and is designed to help reduce the fear and risk of crime;

(j) ensuing that appropriate buffers and separation distances are provided around existing industrial and rural activity operations and that any development that does occur in the proximity of these activities incorporates siting and design measures to effectively mitigate potential adverse impacts.

3.1.5 Desired Environmental Outcome No. 4 - Access and Mobility

(1) Redland City is served by an effective, safe, equitable and convenient movement system through -

(a) establishing an integrated land use pattern and movement system based on a combination of road, rail and water transport and pedestrian and cycling systems;

(b) supporting a compact urban form and pattern of development that reduces private vehicle dependency and increases potential for use of public transport, cycling and walking;

(c) ensuring that development supports the implementation of a functional road hierarchy;

(d) encouraging increases in higher density residential accommodation located within walking distance of rail and/or bus interchanges and centres;

(e) ensuring major employment attractors, including the City's network of Centres and other employment areas are highly accessible and supported by public transport;

(f) ensuring the City's major centres incorporate mixed use, retail, commercial and residential, and other employment opportunities that are designed to maximise the efficient use of land through high levels of access to public transport in accordance with the transit oriented development principles as referenced in the South East Queensland Regional Plan;

(g) providing for the efficient movement of goods and services to and on the City's arterial road network;

(h) protecting and maintaining the efficiency and effectiveness of existing and future transport corridors and existing and future line haul public transport corridors;

(i) ensuring that the planning and design of new and upgraded transport corridors and linkages provides opportunities for all types of travel modes;

(j) minimising adverse impacts of noise generated by existing and proposed major transport corridors on adjoining development through appropriate planning, siting and design of development and through noise attenuation measures sympathetic to the amenity of the streetscape and landscape setting;

(k) promoting the development of a hierarchically structured and well coordinated line haul, feeder/collector public transport system accessible by all modes of transport including walking and cycling;

(l) ensuring that the design and planning of transport systems minimise social and environmental impacts associated with transportation infrastructure development and operations;

(m) recognising the particular needs of the City's island communities and the tourist industry for –
  (i) safe, convenient and reliable water transport;
  (ii) coordination between water and land based public transport systems;
  (iii) attractive passenger terminal facilities for water based transport systems.

(n) providing opportunity for a coordinated system of pedestrian and bikeways which provide for local, residential and commuter trips and reinforce the City's centres hierarchy;

(o) ensuring development incorporates public access to open space, all foreshores and riparian esplanades and beaches throughout the City;

(p) providing equitable and safe transport opportunities to all members of the community including those with impaired mobility;

(q) providing for and protecting the operational viability of nominated haul routes to service industrial and extractive industry operations in the City.

3.1.6 Desired Environmental Outcome No. 5 - Essential Services

(1) Redland City is supported by physical infrastructure, including the provision of water supply, sewerage, stormwater, telecommunications, energy and waste management systems, which meets the differing needs of the City's urban and rural communities by -

(a) ensuring urban growth management boundaries are maintained and a pattern of development promoted which optimises the efficient, integrated and sequenced provision of physical and human services infrastructure;

(b) ensuring any out of sequence or bring forward costs for physical and human services infrastructure are borne by the developer;

(c) being sensitive to the natural environment;

(d) maximising the value of existing and planned infrastructure facilities by consolidating appropriate development in well serviced areas;

(e) being cost effective in the long term;

(f) meeting community needs and standards;

(g) ensuring development contributes a fair and equitable share to the costs of providing physical infrastructure;

(h) recognising the need for unique infrastructure solutions for the City's island communities;

(i) ensuring appropriate buffers are provided and only compatible land uses and development occur in the proximity of infrastructure facilities.

3.1.7 Desired Environmental Outcome No. 6 - Economic Development

(1) Redland City has a diverse, dynamic and sustainable economy with increasing levels of employment opportunity through -

(a) a network of multi-purpose centres where -
  (i) development occurs in accordance with Redland City's Centre network, where,
    a. Capalaba and Cleveland are recognised as Principal Activity Centres under the South East Queensland Regional Plan, and together with Victoria Point are located within the Major Centre zone to accommodate the key concentrations of higher order retail, commercial, residential, administrative, community and entertainment uses and employment mix;
    b. Birkdale and Alexandra Hills are district centres;
    c. Wellington Point, Redland Bay, Mount Cotton Village, Dunwich and Colburn Avenue, Victoria Point are neighbourhood centres.
  (ii) development within a business centre incorporates a high standard of architectural design and streetscape provisions consistent with the identified role, setting, and preferred character of the business centre in which it is located.

(b) reinforcing and protecting existing industry based areas at Cleveland, Ormiston, Thorneside, Capalaba and other areas of the City;

(c) the investigation of future integrated employment areas for the whole of the City, including areas as depicted on Map 1 - Integrated Employment Area, as part of the development of a Local Growth Management Strategy under the *SEQ Regional Plan*. The outcomes of the investigation is intended to -
  (i) accommodate future modern high quality and structured planned employment centres;
  (ii) incorporate appropriate infrastructure, transportation links and environmental and scenic amenity protection measures;
  (iii) provide a significant contribution to satisfying the future business and employment needs of the City;

(d) promoting tourism and ecotourism based on the City's extensive natural environmental and cultural assets, including its bushland koala habitat areas, Moreton Bay and its islands;

(e) maximising opportunities for home based employment consistent with maintaining residential amenity through the establishment of clean low impact businesses in the City's residential areas;

(f) protecting the poultry industry and other traditional and emerging rural activities within those parts of City located within the Regional Landscape and Rural Production Area of the South East Queensland Regional Plan;

(g) recognising and protecting the sustainable use of natural economic resources and rural enterprises in the rural parts of the City where they are consistent with environmental, landscape and amenity values;

(h) investigating opportunities for higher order education facilities on land located at Kinross Road, Thornlands, and on land bounded by Taylor, Boundary and Springacre Roads, Thornlands.

Map 1 – Integrated Employment Area

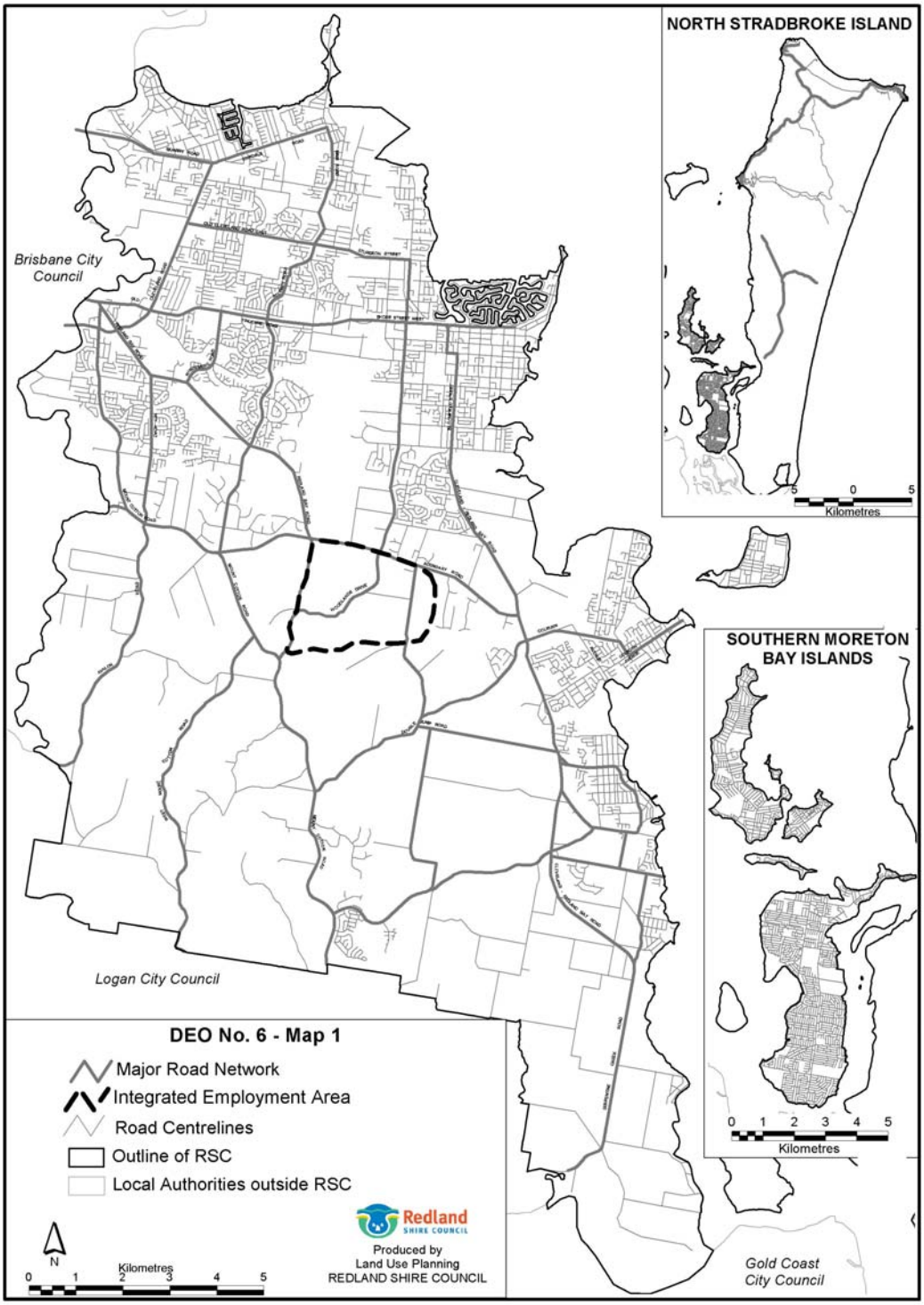

Division 2 - Strategic Framework

3.2.1 Introduction

(1) The Strategic Framework reflects the desired environmental outcomes and summarises the approach taken by the Redlands Planning Scheme to achieve the desired environmental outcomes.

(2) The Strategic Framework does not have a role in development assessment under the Redlands Planning Scheme.

(3) The Strategic Framework -

(a) provides a summary of city-wide and local strategies implemented under the Redlands Planning Scheme to achieve the desired environmental outcomes;

(b) describes the context for the strategies, and associated Redlands Planning Scheme measures used to secure their implementation.

(4) In facilitating the achievement of the desired environmental outcomes, the Strategic Framework provides a more specific outline of how the three strands of ecological sustainability (environmental, economic and social) are balanced and integrated within Redland City.

(5) The strategies and measures explained in the Strategic Framework are designed to address the core matters[3.1]. These are -

(a) Land Use and Development which includes -

(i) the location of, and the relationships between, various land uses;
(ii) the effects of land use and development;
(iii) how mobility between places is facilitated;
(iv) accessibility to areas;
(v) development constraints including, but not limited to, population, demographic impacts and flooding.

(b) Infrastructure which includes -

(i) the extent and location of proposed infrastructure, having regard to existing infrastructure networks, their capacities and thresholds for augmentation;
(ii) when infrastructure is proposed to be provided.

(c) Valuable Features which includes whether terrestrial or aquatic -

(i) resources or areas that are of ecological significance such as habitats, wildlife corridors, buffer zones, places supporting biological diversity or resilience, and features contributing to the quality of air, soil and water including catchments or recharge areas;
(ii) areas that contribute significantly to amenity such as areas of high scenic value, physical features that form significant visual backdrops or that frame or define places or localities, and attractive built environments;
(iii) areas or places of cultural heritage significance, such as areas or places of indigenous cultural significance, or aesthetic, architectural, historical, scientific, social or technological significance, to the present generation or past or future generations;
(iv) resources or areas of economic value, such as extractive resource deposits, forestry resources;
(v) water resources, sources of renewable and non-renewable energy and good quality agricultural land.

[3.1] As defined pursuant IPA, the core matters are those primary heads of consideration that all planning schemes must address and include land use and development, infrastructure and valuable features.

3.2.2 Components of the Strategic Framework

(1) The Strategic Framework contains two major components -

(a) broad strategies for Redland City;

(b) local level strategies that apply to particular areas within Redland City.

(2) Broad strategies represent the major policy initiatives necessary to advance ecological sustainability across the City based on a 2021 time horizon. These strategies address issues such as:

(a) Urban Settlement Pattern and Population Growth;
(b) Residential Development;
(c) Centres;
(d) Business and Industry;
(e) Rural Areas;
(f) Natural Environment;
(g) Recreation and Open Space;
(h) Cultural Heritage;
(i) Environmental Management and Hazard Planning;
(j) Community and Social Development;
(k) Transport;
(l) Infrastructure.

(3) Local level strategies reflect more detailed planning strategies and measures applicable to specific areas within Redland City.

3.2.3 Strategies for the City

(1) Urban Settlement Pattern and Population Growth -

(a) The preferred settlement pattern and relationship between various uses is illustrated on Diagram 1.

(b) The City's 2004 Estimated Resident Population was estimated at 127,777, growing rapidly from a total of 28,870 in 1976. Historically, population growth rates have consistently exceeded State and South East Queensland averages, resulting in Redland City having accommodated an increasing share of the regional population.

(c) The majority of the City's population, approximately 94.7% or 121,020 persons, reside on the mainland, with the remainder, 5.3% or 6,757 persons, residing on North Stradbroke and the Southern Moreton Bay Islands.

(d) Based on current and historical projections the Local Government has adopted for planning purposes a mainland figure of 157,000 persons by 2016. This figure is expected to further increase to between 168,000 to 171,000 persons by 2021. During this period it is expected that the population for the City's Islands will increase to 11,500 persons. Most of the City's growth is expected to come from inward migration rather than natural increase with people moving to the City typically accounting for up to 80% of the City's annual population growth. Between now and 2021, average population growth is expected to range between 1.8% and 2.6% per annum.

(e) Projected population growth will be accommodated predominantly in areas designated for urban development and the areas included in the Emerging Urban Community Zone following completion of structure plans. The Local Growth Management Strategy for Redland City as required by the *SEQ Regional Plan 2005-2026* will be a key tool in determining whether any additional land included within the urban footprint of the *SEQ Regional Plan* should be designated for urban purposes within the life of this planning scheme.

(f) The Emerging Urban Community (EUC) Zone contains the following six areas of land located throughout the City -

(i) South East Thornlands;
(ii) Kinross Road, Thornlands;
(iii) South Bunker Road, Victoria Point;
(iv) South west Point Lookout township;
(v) North Dunwich township.

Each area included in the EUC Zone is generally considered suitable for urban development within the life of the Planning Scheme (8 years). Only a limited range of uses maybe undertaken within each of the six areas until such time as structure plans and amendments to the Redlands Planning Scheme are completed and approved. Structure Plans for each of the six areas will be progressively undertaken in accordance with identified need and the outcomes of the Local Growth Management Strategy. Each structure plan will be -

(i) prepared and managed by Redland City Council in accordance with Planning Scheme Policy 15 - Emerging Urban Community Structure Plan and State Government Guidelines;
(ii) undertaken in partnership with landowners, key stakeholders and the community and approved where necessary by the Regional Planning Minister.

(g) An area of the City located at the southern extremity of the Redland urban area, between the coastline and the Koala Conservation Area has been included in an Investigation Zone. The South East Queensland Regional Plan (2005) includes all land contained within this zone within the Investigation Area regional land use category. Before development of the Southern Redland Bay area could proceed, a number of specific issues need to be resolved including the -

(i) optimum and most suitable use of the land;
(ii) form and intensity of development;
(iii) impact on the adjacent areas of scenic and conservation value;
(iv) protection and full public access to the coastline and the bay;
(v) impacts on external infrastructure.

The Regional Plan indicates that if suitable, development in the Southern Redland Bay area is not anticipated to proceed until 2010-2015. In addition to the specific requirements for the Southern Redland Bay area, the Regional Plan also identifies generic criteria for the Investigation Area regional land use category which must be satisfied prior to urban development taking place, these include -

(i) a detailed study has been undertaken to determine potential development opportunities and constraints;
(ii) the proposed development is demonstrated to be consistent with the intent of the Regional Plan;
(iii) there is a clearly demonstrated public need for the development;
(iv) significant environment values, open space corridors and inter-urban breaks are identified and protected;
(v) major transport and infrastructure corridors are identified and protected;
(vi) land for the proposed development has been formally incorporated into the Urban Footprint, with the balance area included in appropriate regional land use categories;
(vii) a structure plan have been developed setting out the overall intent of the proposed development;
(viii) appropriate State Infrastructure Agreement(s) have been finalised;
(ix) the relevant local government planning scheme has been amended and development approval obtained.

The Investigation Zone will protect the Southern Redland Bay area from fragmentation and intervening inappropriate uses until such time as the studies and investigations as required by the Regional Plan are conducted and completed.

(h) A proportion of the City's urban residential growth will also be accommodated through increases in residential density around major, district and neighbourhood centres, and

transport interchanges and significant transport routes. Areas preferred for increases in residential density are included within the Medium Density Residential Zone. Certain areas included within a sub-area of the Urban Residential Zone are also encouraged to provide for an increased range of residential uses including multiple dwellings and aged persons and special needs housing.

(i) A range of housing types and styles are encouraged, including dual occupancy, small lot housing and multiple dwellings and in limited locations higher density development located predominantly within the Medium Density Zone and the various centre zones.

(j) Minimum lot yields are applied in areas identified for urban residential development to secure the efficient use of available residential land stocks.

(k) The development of centres is in accordance with a functional network, with the major centres at Capalaba, Cleveland and Victoria Point. These areas will accommodate the primary concentrations of higher order commercial, retail, administrative, community and entertainment facilities. Both Capalaba and Cleveland are recognised in the Regional Plan as Principal Activity Centres which service catchments of sub regional significance and accommodate key concentrations of employment.

(l) One future integrated employment area has been identified. This area is identified on Map 1 - Integrated Employment Area. This area is intended to provide a significant contribution to satisfying the future business and employment needs for the City.

(m) The settlement pattern reflects the constraints to urban development including land identified as Koala Conservation Area and Koala Sustainability Area.

(n) Areas required for important resource and rural industries, such as the poultry industry, are included in the Rural-Non Urban Zone and identified and protected for such purposes.

(o) Provision is made for the orderly development and management of major components of the City's transport system in accordance with network hierarchies for vehicle, bicycle and pedestrian movement and public transport modes - bus, rail and ferry.

(2) Residential Development -

(a) The Redlands Planning Scheme implements a pattern of residential development which is generally transit-supportive and which primarily balances the consolidation of new residential development within areas currently designated for such purposes with additional new greenfield areas, included in the urban footprint of the Regional Plan, zoned Emerging Urban Community in order to achieve a compact urban form across the City.

(b) A proportion of the City's urban residential growth is accommodated through increases in residential density around major, district and neighbourhood centres, and public transport interchanges and along the Major Movement Network. Areas preferred for increases in residential density are included within the Medium Density Residential Zone or within the sub-area of the Urban Residential Zone.

(c) Areas of conventional and lower-density residential development are included in the Urban Residential, Low Density Residential and Park Residential Zones.

(d) The Redlands Planning Scheme restricts urban development to those areas zoned for such purposes, with no further expansion of these areas supported during the life of the Redlands Planning Scheme.

(3) Centres -

(a) The Redlands Planning Scheme encourages the development of centres in accordance with a functional network, with individual centres of varying level differentiated from one another on the basis of a centres matrix that distinguishes centre role and function, scale and use composition.

(b) The designated network of centres is illustrated on Diagram 2 - Centres.

(c) In a regional context, centres situated at Carindale, Mount Gravatt and Loganholme, impact significantly on Redland City centres by continuing to provide a high order of retail shopping, particularly department stores that will continue to establish a level of leakage of retail spending outside of the City.

(d) The South East Queensland Regional Plan recognises both Capalaba and Cleveland as Principal Activity Centres which service catchments of sub regional significance and accommodate key concentrations of employment. The Planning Scheme recognises the role and function of the Cleveland and Capalaba Centres and existing and future development opportunities within both of the Principal Activity Centres through the use of sub-areas in the Major Centre zone. Victoria Point is also included in the Major Centre Zone although it does not serve a catchment of sub regional significance.

(e) Capalaba Major Centre -

(i) Capalaba is the primary retail and commercial centre with a catchment greater than 50,000 that includes -
  a. discount department store/s;
  b. supermarkets;
  c. a full range of specialty stores;
  d. commercial premises;
  e. retail warehousing.
(ii) the administrative functions of Capalaba are secondary to that of Cleveland and are limited to local government support branches and State government services;
(iii) Capalaba includes residential mixed-use development consistent with the character of the centre;
(iv) it is a tourist gateway to the City as well as a centre for special events facilitated by traders and the local community;
(v) entertainment facilities such as cinemas, nightclubs, restaurants and bowling alleys are included in Capalaba;
(vi) Capalaba is a major transport interchange and provides public and private transport and a driving time of less than 20 minutes to most areas within the City and as such, is accessible to large sections of the City community.

(f) Cleveland Major Centre -

(i) Cleveland is developed as one of two secondary retail and commercial major centres with a catchment less than 50,000 people that includes -
  a. one (1) discount department store;
  b. supermarkets;
  c. specialty stores;
  d. commercial premises.
(ii) Cleveland is the primary administrative centre including the local authority administrative headquarters and State government services;
(iii) Cleveland includes residential and residential mixed-use development consistent with the character of the centre;
(iv) Cleveland is the City's major tourist and cultural centre for events and displays including markets, fairs, carnivals and tourist information for the City;.
(v) Cleveland is a centre for cultural and entertainment facilities including performing arts, galleries, and restaurants.
(vi) Cleveland is a major transport interchange and provides public and private transport and a driving time of less than 20 minutes to most areas within the City and as such, is accessible to large sections of the community.

(g) Victoria Point Major Centre -

(i) Victoria Point is developed as one of two secondary retail and commercial major centres with a catchment less than 50,000 people that includes -
  a. one (1) discount department store;
  b. supermarkets;
  c. specialty stores;
  d. commercial activities;

(ii) Victoria Point is a third tier administrative centre and is intended to include local government shop front services and branch library services;
(iii) Victoria Point includes residential and residential mixed-use development consistent with the character of the centre in specific Sub Areas;
(iv) Victoria Point is a third tier tourist centre providing tourist information, particularly relating to the southern sections of the City;
(v) Victoria Point is to include entertainment facilities such as cinemas and restaurants;
(vi) Victoria Point provides a public transport interchange and has high accessibility by private transport with driving time generally less than 15 minutes to its catchment.

(h) District centres at Birkdale and Alexandra Hills provide for the commercial and retail needs of surrounding district catchment population of approximately 15,000 persons.

(i) Neighbourhood centres are located at Wellington Point, Redland Bay, Mount Cotton Village, Dunwich and Colburn Avenue - Victoria Point. These centres are intended to fulfill a traditional village centre role. They provide for neighbourhood commercial and retail needs of a catchment population generally up to 7,500 persons, except Mount Cotton Village and Colburn Avenue - Victoria Point where the catchment size is reduced to reflect locational circumstances. Retail and commercial activity within these centres is to encompass mini-markets, specialty shops, and limited commercial premises. Full-line supermarkets are inconsistent with the intended role and function of these centres and accordingly are not considered appropriate.

(j) All remaining centres in the City are local centres. Local centres are generally encouraged to develop in locations zoned for such purposes.

(k) The Redlands Planning Scheme actively protects the primacy of the City's centres by discouraging out-of centre development and ensuring no existing centre expands to the next level in the centre's matrix by virtue of size or function.

(4) Business and Industry -

(a) The Redlands Planning Scheme incorporates a range of measures to stimulate and support this City's economy contributing to increasing levels of employment opportunity offered within the City.

(b) A new release of general industry land at the southern end of Capalaba provides further opportunities for industrial activity and employment.

(c) Business and industrial development is encouraged through the designation of land for commercial, business and industry purposes. The network of Business and Employment Areas is illustrated on Diagram 3 - Employment Areas. A large area of land to the south of Boundary Road Thornlands and bounded by Taylor Road to the west and Springacre Road to the east has been identified to provide a significant long term contribution to satisfying the future business and employment needs for the City. The Local Growth Management Strategy, required for completion by June 2007, will be a key tool in determining if or when the investigation of this area for future long term integrated employment purposes may commence.

(d) General Industrial uses are primarily concentrated in the Cleveland Industrial estate located to the west of Wellington Street, Cleveland. This area is to accommodate a mix of light and general industrial purposes including manufacturing, processing, distribution, transport and storage uses including those which by virtue of their scale, character, operational characteristics or impacts, are generally considered to be inappropriate within other Zones.

(e) Commercial industrial development is encouraged within established nodes at Thorneside, Victoria Point and in appropriately zoned areas at the fringe of Capalaba and Cleveland Centres.

(f) Provision is made for marine-related industry to consolidate around established marine transport nodes including Toondah Harbour, Weinam Creek and Dunwich and the established precinct in Beveridge Road.

(g) Land within the Emerging Urban Community Zone located at Kinross Road, Thornlands, and land bounded by Taylor, Boundary and Springacre Roads, Thornlands will be investigated for opportunities they may provide for higher order educational facilities.

(5) Rural Areas -

(a) The Redlands Planning Scheme recognises the economic, character and scenic amenity and environmental value of the City's rural areas and provides for the protection of these values through the inclusion of such areas in the Rural Non-Urban Zone and in some cases the Environmental Protection and Conservation Zones.

(b) The City's viable, high value poultry industry is generally provided with long-term protection throughout the City (except where sited within the Emerging Urban Community Zone), from incompatible uses or encroaching development through the general inclusion of such areas within the Rural Non-Urban Zone and the application of buffer controls.

(c) Remaining areas of land suitable for horticultural activities are retained for such purposes including but not limited to the cut flower and commercial nursery industries, vineyard/wine industries and small crops.

(d) Minimum lot size controls are used to preclude the excessive fragmentation of rural land holdings.

(e) Key and local resource areas for extractive industries are identified and protected within the planning scheme.

(f) Nature and eco-tourism opportunities are encouraged and accommodated within the City's rural hinterland.

(g) Service industry of a scale and amenity suitable for a rural setting without multiple tenancies may also be established within the rural areas where also consistent with the SEQ Regional Plan.

(6) Natural Environment -

(a) The protection of areas of ecological, habitat and/or biodiversity significance is facilitated by the inclusion of such areas within the Conservation Zone or Environmental Protection Zone.

(b) Diagram 4 - Natural Environment identifies the core habitat, rural and habitat corridor network and the urban corridor network.

(c) Environmental values on the Mainland include a range of listed threatened species and ecological communities as well as significant areas of endangered regional ecosystems in accordance with the *Vegetation Management Act (Qld)* and the *Environmental Protection and Biodiversity Conservation Act (Cth*).

(d) Development within or adjacent to core environmental areas is subject to codes which ensure such development or its associated impacts do not detract from the environmental integrity of these areas.

(e) The Redlands Planning Scheme recognises the nationally significant koala habitat and provides for its protection in a manner consistent with the requirements of the relevant State planning policies and guidelines. This is achieved through limiting and managing vegetation clearing, the application of buffering requirements to reduce "edge" impacts, and the allocation of Zones to achieve the separation of incompatible uses.

(f) Overlays and overlay codes are used to trigger and implement effective coastal protection, wetland and waterway management in the assessment of development.

(g) Visual and scenic quality is preserved through the allocation of zones to reinforce -
   (i) physical and visual breaks between communities;
   (ii) management of vegetation clearing;

(iii) protection of remnant vegetation;
(iv) protection of vistas, peaks, ridgelines and green backdrops;
(v) encouraging development that is responsive to natural terrain and landform.

(7) Recreation and Open Space -

(a) The City's key recreational resources are identified and protected for recreational purposes through complementary inclusion generally in the Open Space and Conservation Zones. Refer to Diagram 5 - Open Space and Recreation Areas and Facilities and Diagram 6 - Open Space and Recreation Areas - Local Government Control.

(b) Recreational resources and open space are provided to:
(i) ensure a diversity of recreation settings;
(ii) encourage multiple use of open space;
(iii) co-locate compatible recreation activities;
(iv) ensure a non-motorised recreation trail network is integrated into the open space and transport networks;
(v) ensure linkages are provided between open space areas;
(vi) provide a significant contribution to the greenspace character of the City and the region.

(8) Cultural Heritage -

(a) The local government has identified sites of cultural heritage significance. These are listed in Schedule 4 of the Redlands Planning Scheme. Development involving or on lands adjacent to identified sites are subject to controls to protect the cultural heritage values of significant sites and/or buildings.

(b) The Heritage Place and Character Precinct Overlay and code are used to identify and regulate development affecting buildings, sites or precincts of cultural heritage or character significance.

(9) Environmental Management and Hazard Planning -

(a) Major hazard constraints are recognised through the Redlands Planning Scheme under a hazard planning framework based on Overlays and codes regulating development in areas subject to acid sulfate soils, bushfire hazard, flood and tidal surge or drainage constrained land.

(b) Overlay and use codes provide for the regulation and mitigation of development-related acoustic, air and water quality impacts.

(10) Community and Social Development -

(a) The Redlands Planning Scheme implements residential development strategies that are transit-supportive, encourage a range of housing types and styles and promote a high level of access to centres and community facilities and services.

(b) Code provisions require the design and layout of residential neighbourhoods to enhance access and connectivity to improve community integration and cohesion.

(c) Redlands Planning Scheme Policies outline requirements for the assessment of social and economic impact as part of the development assessment process.

(11) Transport -

(a) Movement Network is illustrated on Diagram 7. The hierarchy identifies the function and operational requirements of major roads recognised under the hierarchy.

(b) The Redlands Planning Scheme facilitates an efficient, safe and attractive integrated transport network providing for a range of transport modes including motor vehicles, freight vehicles, public transport, cyclists and pedestrians.

(c) The Redlands Planning Scheme regulates the potential impact of development on the safe and efficient functioning of the road network through the allocation of Zones, the application of road design standards and payment of infrastructure contributions towards the provision and upgrading of the road network.

(d) The City's Public Transport Network is illustrated on Diagram 8. The Redlands Planning Scheme provides for the orderly and planned expansion of the network in conjunction with progressive development of residential, centre and industrial areas during the life of the Planning Scheme.

(e) The allocation of Zones and assessment of development provides for the minimisation of transport related impacts.

(12) Infrastructure -

(a) Infrastructure provision is required to accord with the provision standards prescribed under the relevant Zone Code applying to land.

(b) The Redlands Planning Scheme protects the City's primary water supply catchments through the application of an Overlay.

(c) Areas intended for urban development are supplied with reticulated water supply and sewerage services, with additional growth during the life of the plan accommodated through the apportionment of spare capacity and/or supply and reticulation augmentation.

(d) Additional services including stormwater drainage, energy, telecommunications and waste disposal are also provided to urban areas where required in Zone Code controls.

(e) The management of stormwater is achieved through compliance with the provisions of the Stormwater Management Code, and the Flood Prone, Tidal Affected and Drainage Constrained Overlay and Code and Waterways, Wetlands and Moreton Bay Overlay and Code.

(f) The orderly and efficient provision of infrastructure is facilitated by encouraging development to locate within the Priority Infrastructure Area (PIA).

(g) The equitable and efficient provision of infrastructure is achieved through the imposition of infrastructure contributions in accordance with the City's Infrastructure Charges Schedules. Once developed Infrastructure Charges Schedule will replace existing Planning Scheme Policies.

(h) Building complete communities with the provision of appropriate levels of infrastructure, community services, cultural and recreational facilities which service the needs of new residents and as appropriate, neighbouring localities.

3.2.4 Local Level Strategies applying to certain parts of the City

(1) Southern Moreton Bay Islands (SMBI) -

(a) Urban Settlement Pattern -

(i) The Redlands Planning Scheme generally adopts the existing subdivision pattern on the Southern Moreton Bay Islands.
(ii) Areas of high conservation value and areas required for the conveyance of stormwater or drainage constrained are precluded from development.
(iii) The Redlands Planning Scheme ensures that population growth is not greater than that projected by the *Southern Moreton Bay Islands Planning and Land Use Strategy, 1999*.
(iv) The creation of additional lots through lot reconfiguration is inconsistent with the Planning Scheme.
(v) The commercial and community hubs of the Islands are focused around the water-based transport terminals to enhance accessibility for all island residents and visitors.

Provision is also made for these hubs or centres to be served by a network of roads and pedestrian/cycle ways.

(vi) Provision is made for a hierarchy of Centres that provide a range commercial activities and community facilities to serve residential areas.

(vii) Special locations are provided on Macleay Island and Russell Island to cater for the establishment of industrial premises that serve the local population. Provisions are included to protect nearby residential areas from any potential impacts from such activities.

(viii) Core environmental areas and land with identified insurmountable drainage constraints are protected and managed within the Conservation Zone. Urban development within Sub-Area CN1 of the Conservation Zone is inconsistent with the Planning Scheme. Limited forms of development may be appropriate within the Conservation Zone (outside of the Sub-areas) where it can be demonstrated that environmental values are protected, maintained and rehabilitated where necessary.

(b) Residential Development -

(i) The Redlands Planning Scheme provides for a separate Zone for residential development on the Islands. The SMBI Residential Zone has design controls for residential development aimed at reducing the impact on the Islands landscape and natural character and preserving the Islands' low intensity building form which is distinctively different to that on the mainland. The retention or reinstatement of native vegetation is strongly encouraged for development within the SMBI Residential Zone.

(ii) Significant ecological areas and processes on land within Sub Area SR1 of the SMBI Residential Zone must be identified, protected, managed and where necessary, restored, to ensure their long term viability.

(iii) Medium density forms of residential development are not considered appropriate on the Islands, and the creation of further residential lots through reconfiguring a lot is not supported.

(c) Centres -

(i) The Redlands Planning Scheme provides for the development of Centres to accommodate a variety of commercial, retail, service trades, community facilities and tourism related activities.

(ii) The City's centres of Capalaba, Cleveland and Victoria Point provide the key concentrations of higher order retail commercial and administrative uses. These centres will provide the highest order of services to the Islands, and the importance of the land and water based transport to access these services is acknowledged and addressed in the *Southern Morton Bay Island Integrated Local Area Transport Plan, 2002*. The Redlands Planning Scheme will provide for road, pedestrian and cycle networks that integrate with the water based transport network to provide access to these highest order centres.

(iii) On the Islands, two levels of centres are envisaged, Island Centre and Local Centre. A separate Zone is provided in the Redlands Planning Scheme for Island Centres that will be the principal or highest order centre. They are located near the ferry terminals to form the gateway and service hub on Macleay, Russell and Lamb Islands.

(iv) An SMBI Centre Zone Code will guide development in these centres, which will provide for a range of complementary activities to service the Island Group as a whole. Generally community facilities, retail premises, transport infrastructure, tourist accommodation and professional services are intended in these areas.

(v) A range of residential and tourist uses are appropriate within these centres, except in Sub Area SC1 of the SMBI Centre Zone on Russell Island, south of Burrows Street. This area represents a transitional area between commercial and industry uses.

(vi) Provision is also made for Local Centres on Macleay, Russell and Lamb Islands. These centres are intended to provide convenience shopping and personnel service activities for surrounding residential areas. The City wide Local Centres Zone Code will guide development within these centres.

(vii) The Redlands Planning Scheme actively protects the primacy of the Island Centres by discouraging out-of-centre non-residential development.

(viii) The creation of additional lots in the zones is generally inconsistent with the Planning Scheme, except where the reconfiguration improves the functional layout of the centre.

(d) Business and Industry -

(i) The Redlands Planning Scheme makes provision for employment generating uses that recognise the unique location and character of the Islands and for business and industry uses which service the Island population.
(ii) The Island Centres, and to a lesser extent Local Centres, will provide for a range of commercial and service industry uses and make provision for the growth of home-based businesses. Service industry uses may be appropriate within Island Centres as these uses are primarily small scale, low impact industrial activities that are intended to provide industry services to the general public.
(iii) An Island Industry Zone is provided on Macleay and Russell Islands to cater for service industry and selected general industry uses that due to the servicing requirements and potential amenity impacts would not be appropriate in the Centres. These uses may include a workshop for the purpose of motor vehicle panel repairs, food processing, fabrication or engineering and other activities required to support the needs of the Island population.
(iv) On Macleay Island, the Island Industry Zone is located on the site of the existing Council material stockpile area on High Central Road and Kate Street. The Redlands Planning Scheme will require the retention/establishment of visual amenity buffers around this site.
(v) On Russell Island, the Island Industry Zone is located adjacent to the SMBI Centre Zone - Sub Area SC1. The Redlands Planning Scheme makes provision for protecting the amenity of adjacent residential areas and school site through the designation of an Island Industry zone sub area. In addition an area of land located on the corner of Centre Road and Davidson Road has been identified for future investigation to determine its suitability for future industrial purposes;
(vi) Opportunities for low key tourism and ecotourism are provided in a number of zones across the Islands;
(vii) The creation of additional lots for business and industry through reconfiguring a lot is generally inconsistent with the Planning Scheme, except where the reconfiguration improves the functional layout of an industrial area.

(e) Rural Areas -

(i) The Redlands Planning Scheme's stated outcomes for rural areas on the Islands is to retain the existing subdivision pattern while making some provision for nature and tourism related uses, horticultural activities and small scale service industry.
(ii) To maintain the viability of rural holdings on the Islands any further fragmentation of rural lots through further reconfiguring a lot is strongly discouraged and inconsistent with the overall outcomes of the applicable zone code.

(f) Natural Environment -

(i) Environmental values on the Islands are represented by terrestrial flora which includes a range of listed threatened species and ecological communities as well as significant areas of endangered regional ecosystems in accordance with the *Vegetation Management Act (Qld)* and the *Environmental Protection and Biodiversity Conservation Act (Cth*). The terrestrial forests on the Islands are also ecologically significant in the habitat they provide for fauna - including migratory species that move between the mainland and Stradbroke Island. The fauna on the Islands includes several rare and threatened species, notably the glossy Black Cockatoo and the False Water Rat. There are also many faunal species associated with intertidal and freshwater wetlands, as well as the adjacent marine waters.
(ii) The Redlands Planning Scheme provides for a range of measures to be implemented across the City to facilitate protection of identified environmental values that are represented in areas of ecological, habitat and/or biodiversity significance. These measures will apply to the Islands and be supplemented by additional measures within the Redlands Planning Scheme in relation to building controls and stormwater management to protect core environmental areas and the Moreton Bay Marine Park.
(iii) The revised *Conservation Acquisition Strategy (CAS)*, 2002 that sought to voluntarily acquire and/or exchange land with identified environmental values forms an essential part of these measures. Voluntarily acquiring or exchanging lots that are nominated

for conservation, bushfire management, habitat and land consolidation was the key to the strategy.

(iv) Certain areas of the Islands contain endangered regional ecosystems and support fauna habitat. Additional measures within the Redlands Planning Scheme seek to manage and protect lots with identified environmental values that were not listed for acquisition in accordance with the revised CAS.

(v) Provisions are also provided to control vegetation removal and reinstatement of native vegetation in areas outside the core environmental areas mentioned above.

(g) Recreation and Open Space -

(i) The Islands key recreation resources and areas required for the provision of future facilities are identified and protected for recreational purposes through complementary inclusion in the Open Space, Rural Non Urban, Conservation or Environmental Protection Zones.

(ii) The Redlands Planning Scheme makes provision for the linking of these key recreation areas through the road and pedestrian/cycle trail network.

(h) Community and Social Development -

(i) While the Islands will continue to rely on the mainland for higher order services and facilities, the Island Centres will provide for a baseline of community services and facilities to encourage community development and the establishment of local support networks.

(ii) The Redlands Planning Scheme promotes access to facilities and services in the Island Centres by focusing these around the ferry terminals on Macleay, Russell and Lamb Islands and by integrating these centres with the transport network.

(iii) The SMBI Centre Zone Code provides measures to encourage the development of these centres as places for residents to meet and interact.

(i) Transport -

(i) The Redlands Planning Scheme depicts a functional road hierarchy for the Islands and identifies the location of pedestrian and cycle linkages to be progressively provided throughout the life of the Planning Scheme.

(ii) Island specific road design measures have been incorporated that reduce concentration of stormwater and minimise erosion.

(iii) Provision is also made for the future expansion of ferry terminals and associated facilities including public transport water and land interchanges and limited public carparking.

(iv) The Redlands Planning Scheme is based on an efficient and sustainable water transport service between the Islands and the mainland. A bridge between Russell Island and the mainland is not supported by State Government policy and is inconsistent with the Planning Scheme.

(j) Infrastructure -

(i) Infrastructure provision is required to accord with the minimum provision standards prescribed in the relevant Zone Code applying to the Islands. These provisions are intended to provide standards of infrastructure that meet community needs, respond to the Islands' setting within the environmentally sensitive Moreton Bay Marine Park and are in keeping with the unique built environment characteristic of the Islands.

(ii) On-site sewerage treatment and effluent disposal is required to reduce the potential for contaminating groundwater, surface water or the marine environment and risks to public health.

(iii) The quality of surface water discharges to freshwater wetlands and the marine environment are protected through measures such as retention of natural drainage lines to increase absorption and filtration of stormwater, provision of buffer areas and other water quality management provisions. The Stormwater Management Code, together with the Flood Prone and Tidal Affected Land and Drainage Constrained Land Overlay and Waterways, Wetlands and Moreton Bay Overlay Codes will apply to the Islands.

(iv) Stormwater management systems must utilise existing overland flow paths and drainage paths and incorporate measures to reduce stormwater quantity and manage stormwater quality;
(v) Road networks that maximise retention of native vegetation and minimise impacts on the Islands' landscape and the concentration of stormwater runoff are encouraged.
(vi) The efficient provision of infrastructure is achieved through an equitable funding strategy. The SMBI is included in the Priority Infrastructure Area (PIA) and Infrastructure Charges Schedule will apply across the Bay islands in the future.

(2) North Stradbroke Island / Minjerribah

(a) Urban Settlement Pattern -

(i) North Stradbroke Island consists of three distinct townships of Dunwich, Amity Point and Point Lookout.
(ii) These townships are interspersed amongst the unique natural environment across the Island.
(iii) The Redlands Planning Scheme generally reinforces the existing subdivision pattern on North Stradbroke Island / Minjerribah.
(iv) Areas of high conservation value are precluded from development.
(v) Provision is made for a limited hierarchy of Centres that provide a range of commercial activities and community facilities to serve residential and tourist areas.
(vi) Core environmental areas are protected and managed within the Conservation Zone. Urban development within the Conservation Zone is inconsistent with the Planning Scheme. Limited forms of development may be appropriate within the Conservation Zone where it can be demonstrated that environmental values are protected, maintained and rehabilitated where necessary.
(vii) The Redlands Planning Scheme is based on an efficient and sustainable water transport service between the island and the mainland. A bridge between North Stradbroke Island / Minjerribah and the mainland is not supported by State Government policy and is inconsistent with the Planning Scheme.

(b) Residential Development -

(i) The Redlands Planning Scheme provides residential zones to prescribe the design controls for residential development aimed at reducing the impact on the Island's landscape and natural environment and preserving the Island's low intensity building form. The retention or reinstatement of native vegetation is strongly encouraged as part of new development.
(ii) Additionally, specific Point Lookout residential controls have been established to protect its unique coastal village atmosphere;
(iii) Certain development controls apply to the recognised erosion prone areas in Amity Point.
(iv) Future potential expansion of the townships (Dunwich and Point Lookout) is identified through the Emerging Urban Community Zone. Development in these areas is required to be preceded by the preparation of Structure Plans and necessary amendment of the Planning Scheme

(c) Centres -

(i) On the Island, two levels of centres are envisaged, Neighbourhood Centre (Dunwich) and Local Centres at Amity Point and Point Lookout. The Point Lookout Local Centres are included in the Point Lookout Centre Zone.
(ii) Local area planning will guide development in these centres, which will provide for a range of complementary activities to service the Island as a whole. Generally community facilities, retail premises, transport infrastructure, tourist accommodation and professional services are intended in these areas.
(iii) A range of integrated residential and tourist uses are appropriate within these centres.
(iv) The Redlands Planning Scheme actively protects the primacy of these Centres by discouraging out-of-centre non-residential development.
(v) The creation of new lots is generally inconsistent with the Planning Scheme, except where reconfiguring by a lot improves the functional layout of the centre.

(d) Business and Industry -

(i) The Redlands Planning Scheme makes provision for employment generating uses that recognise the unique location and character of the Island and for business and industry uses which service the Island and tourist population.
(ii) Areas at Amity Point and Point Lookout provide for low impact service type industry generally, to service the local communities while protecting the amenity of residential and tourism areas;
(iii) Potential opportunities for island industry and employment areas in Dunwich township will be further investigated having regard to environmental constraints, amenity impacts, accessibility, infrastructure services and other relevant issues.

(e) Natural Environment -

(i) Environmental values on the Island include a range of listed threatened species and ecological communities as well as significant areas of endangered regional ecosystems in accordance with the *Vegetation Management Act (Qld)* and the *Environmental Protection and Biodiversity Conservation Act (Cth*). The terrestrial forests on the Island are also ecologically significant in the habitat they provide for fauna - including migratory species that move between the mainland and North Stradbroke Island. There are also many faunal species associated with intertidal and freshwater wetlands, as well as the adjacent marine waters.
(ii) The Redlands Planning Scheme provides for a range of measures to be implemented across the City to facilitate protection of identified environmental values that are represented in areas of ecological, habitat and/or biodiversity significance.
(iii) Certain areas of the Island contain endangered regional ecosystems and support fauna habitat. Additional measures within the Redlands Planning Scheme seek to manage and protect identified environmental values.
(iv) Provisions are also provided to control vegetation removal and reinstatement of native vegetation.

(f) Aboriginal Cultural Significance -

(i) The Aboriginal community regards the entire Quandamooka country, both land and seas, as culturally and spiritually significant.
(ii) The Quandamooka Native Title Claim - Stage One covers an area that includes North Stradbroke Island / Minjerribah.
(iii) The outcomes of the NSI/Minjerribah Planning Study will guide the future planning for land uses on the island. It is intended that where appropriate, the recommendations of this study will be incorporated into the Redlands Planning Scheme.

(g) Recreation and Open Space -

(i) The Island's key recreation resources and areas required for the provision of future facilities are identified and protected for recreational purposes through inclusion in the Open Space, Rural Non Urban, Conservation or Environmental Protection Zones.
(ii) The Redlands Planning Scheme makes provision for the linking of these key recreation areas through the road and pedestrian/cycle trail network.

(h) Community and Social Development -

(i) While the Island will continue to rely on the mainland for higher order services and facilities, the Island Centres will provide for a baseline level of community services and facilities to encourage community development and the establishment of local support networks.
(ii) The Redlands Planning Scheme promotes access to facilities and services in the centres by integrating these centres with the transport network.
(iii) The Redlands Planning Scheme provides measures to encourage the development of these centres as places for residents to meet and interact.

(i) Transport -

(i) The Redlands Planning Scheme depicts a functional road hierarchy for the Island and identifies the location of pedestrian and cycle linkages to be progressively provided throughout the life of the Planning Scheme.
(ii) Island specific road design measures have been incorporated that reduce concentration of stormwater and minimise erosion.
(iii) The Redlands Planning Scheme is based on an efficient and sustainable water transport service between the Island and the mainland.

(j) Infrastructure -

(i) Infrastructure provision is required to accord with the provision standards prescribed in the relevant Zone Codes applying to the Island. These provisions are intended to provide standards of infrastructure that meet community needs, respond to the coastal environment and are in keeping with the unique built environment of the Island.
(ii) A program of providing and upgrading reticulated sewerage to the townships of Dunwich and Point Lookout is currently underway. On site sewerage treatment and effluent disposal systems are provided in other areas on the Island to protect groundwater, surface water, the marine environment and risks to public health.
(iii) The quality of surface water discharges to freshwater wetlands and the marine environment are protected through measures such as retention of natural drainage lines to increase absorption and filtration of stormwater, provision of buffer areas and other water quality management structures. The Stormwater Management Code, together with the Flood Prone and Tidal Affected Land and Waterways and Wetlands Overlay Codes will apply to the Island.
(iv) Stormwater management systems utilise existing overland flow paths and drainage paths and incorporate measures to reduce stormwater quantity and manage stormwater quality;
(v) Road networks that maximise retention of native vegetation and minimise impacts on the Island's landscape and concentration of stormwater runoff are encouraged.

(3) Mount Cotton Village -

(a) Mount Cotton Village, previously named Bayview Country Club Estate, is a master planned residential development in the southern part of the City with a unique character and setting.
(b) Individual Development precincts are sited to maintain the provision of environmental corridors through the Village and with further detail sensitive design at time of reconfiguration will manage tree retention within widened road reserves, site controls on lots and the like.
(c) A range of housing types and lot sizes are intended to provide for the needs of future residents.
(d) Development will be responsive to the topography and natural features of the locality; the need to maximise retention of natural vegetation and to preserve the areas scenic quality.
(e) A neighbourhood centre is located centrally in the Village and provides a range of facilities to meet the commercial and convenience shopping needs of the community. This Centre will also accommodate the provision of community facilities as an integrated component of its design and layout.
(f) The area is to be serviced by public transport to support the local community.
(g) The village is serviced by urban infrastructure at the capacity to meet the demands of this local community.

3.2.5 Strateg y Diagrams

(1) Diagrams 1 to 7 illustrate the strategic framework strategies and should be read in conjunction with each other.

Diagram 1 - Preferred Settlement Pattern

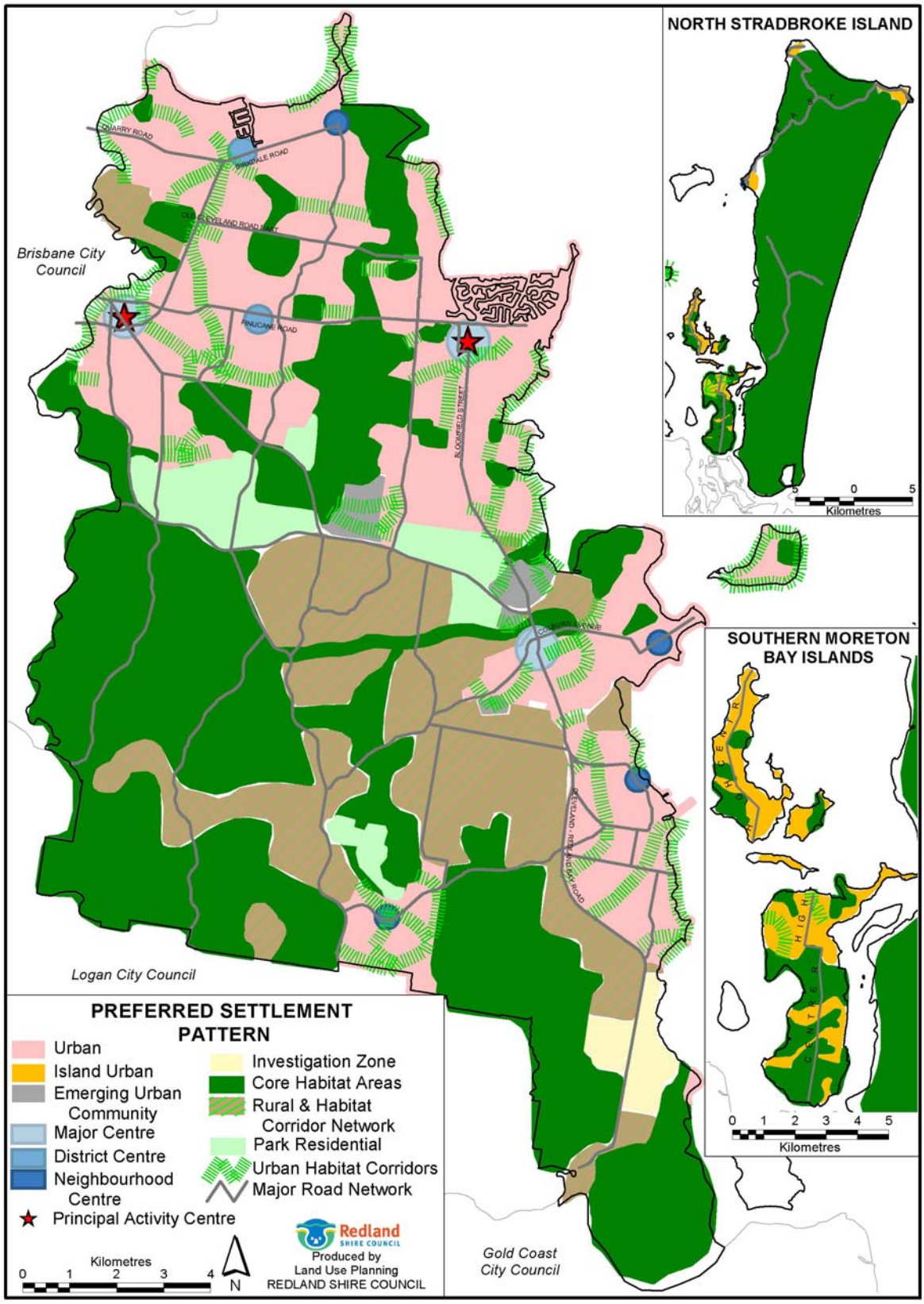

Strategic Framework

Diagram 2 - Centres

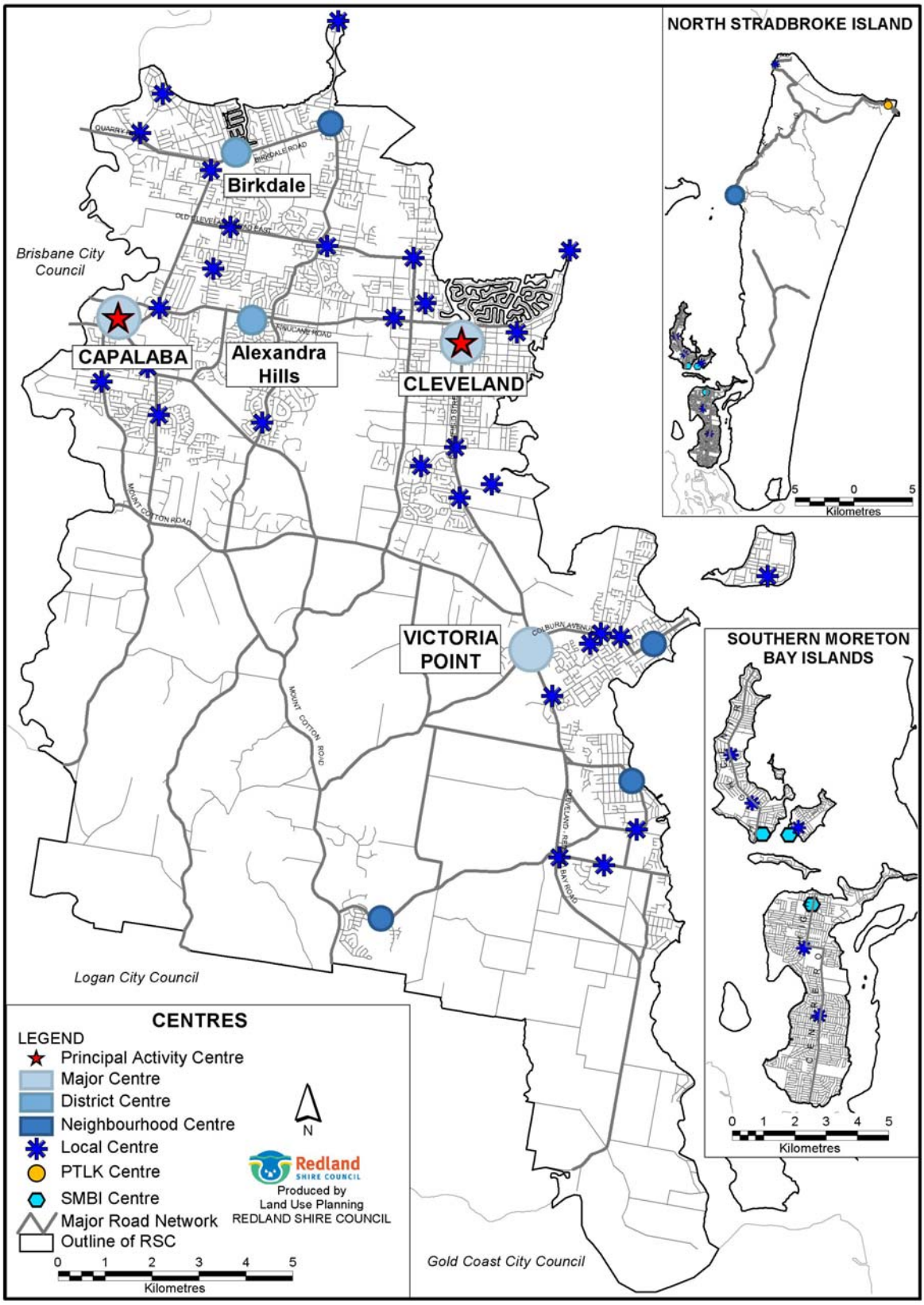

Strategic Framework

Diagram 3 - Employment Areas

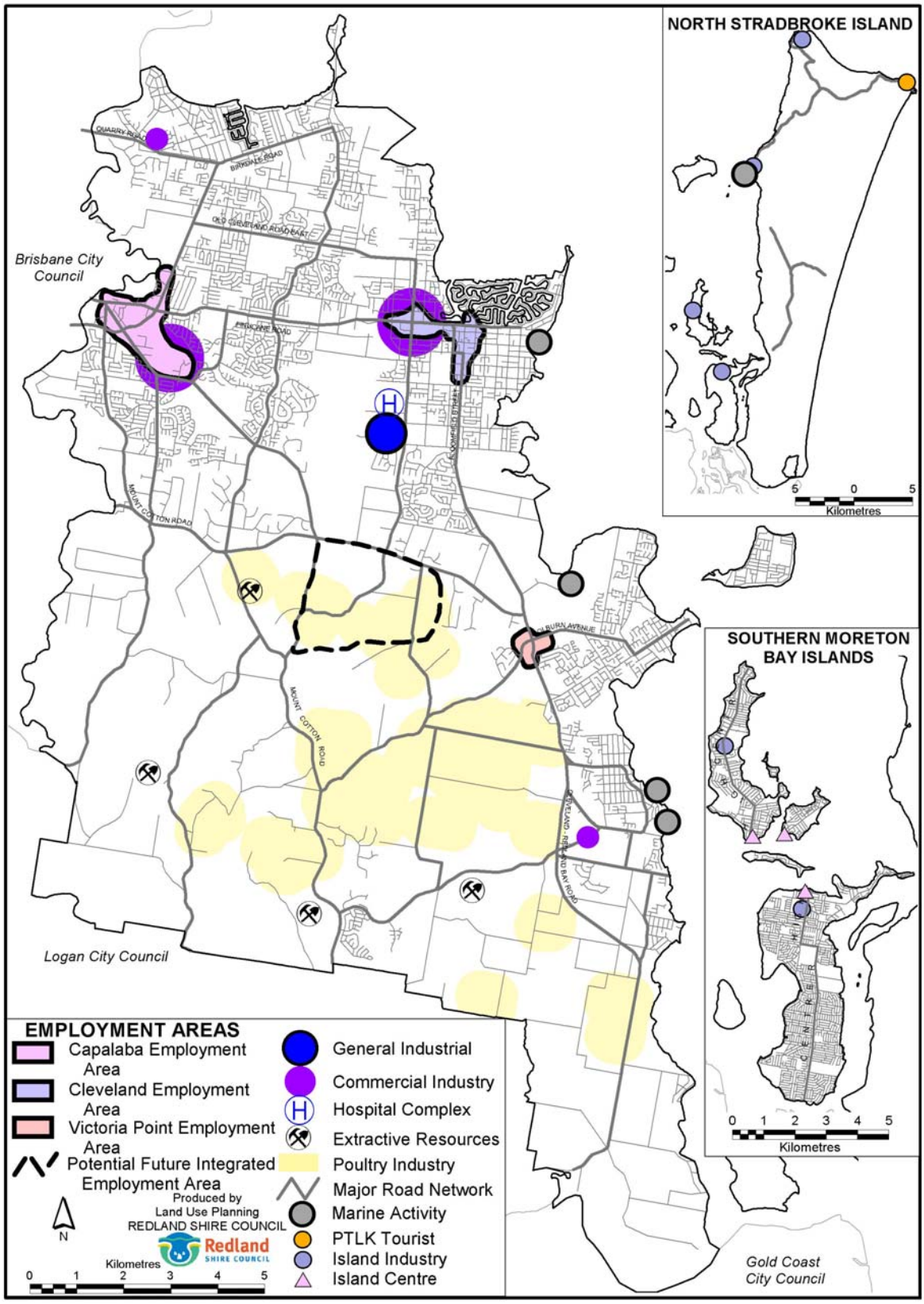

Strategic Framework

Diagram 4 - Natural Environment

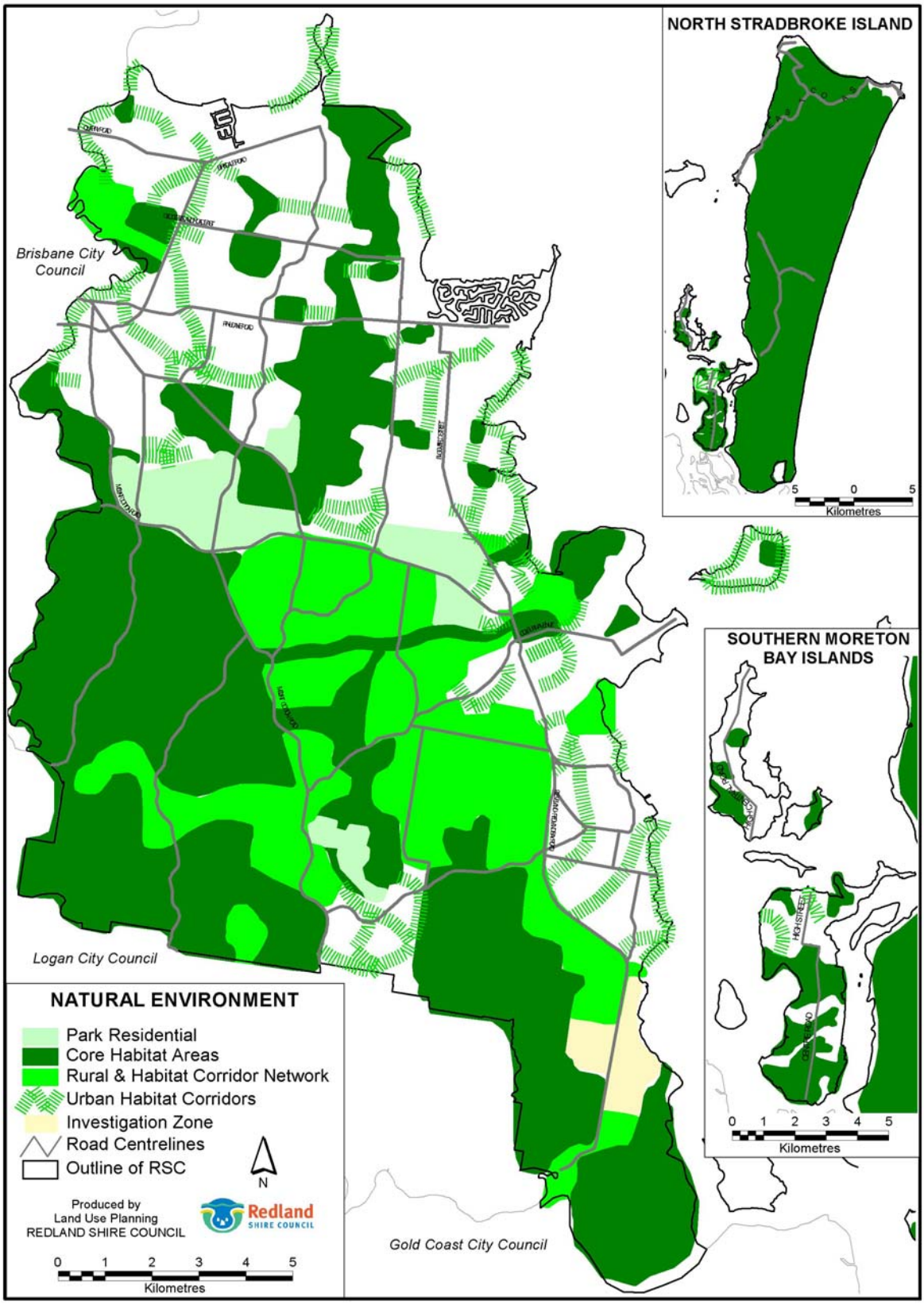

Diagram 5 - Open Space and Recreation Areas and Facilities

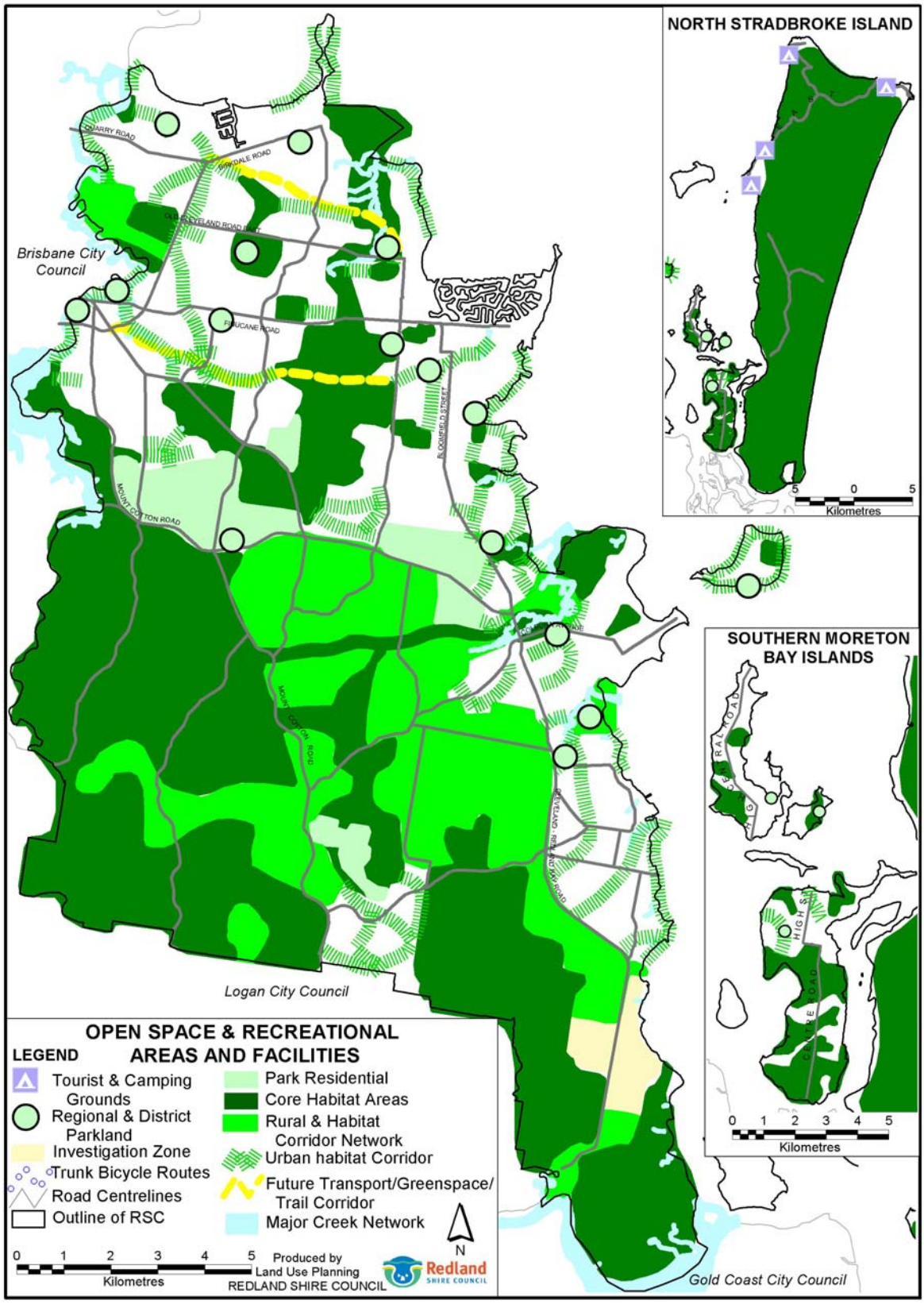

Strategic Framework

Diagram 6 - Open Space and Recreation Areas - Local Government Control

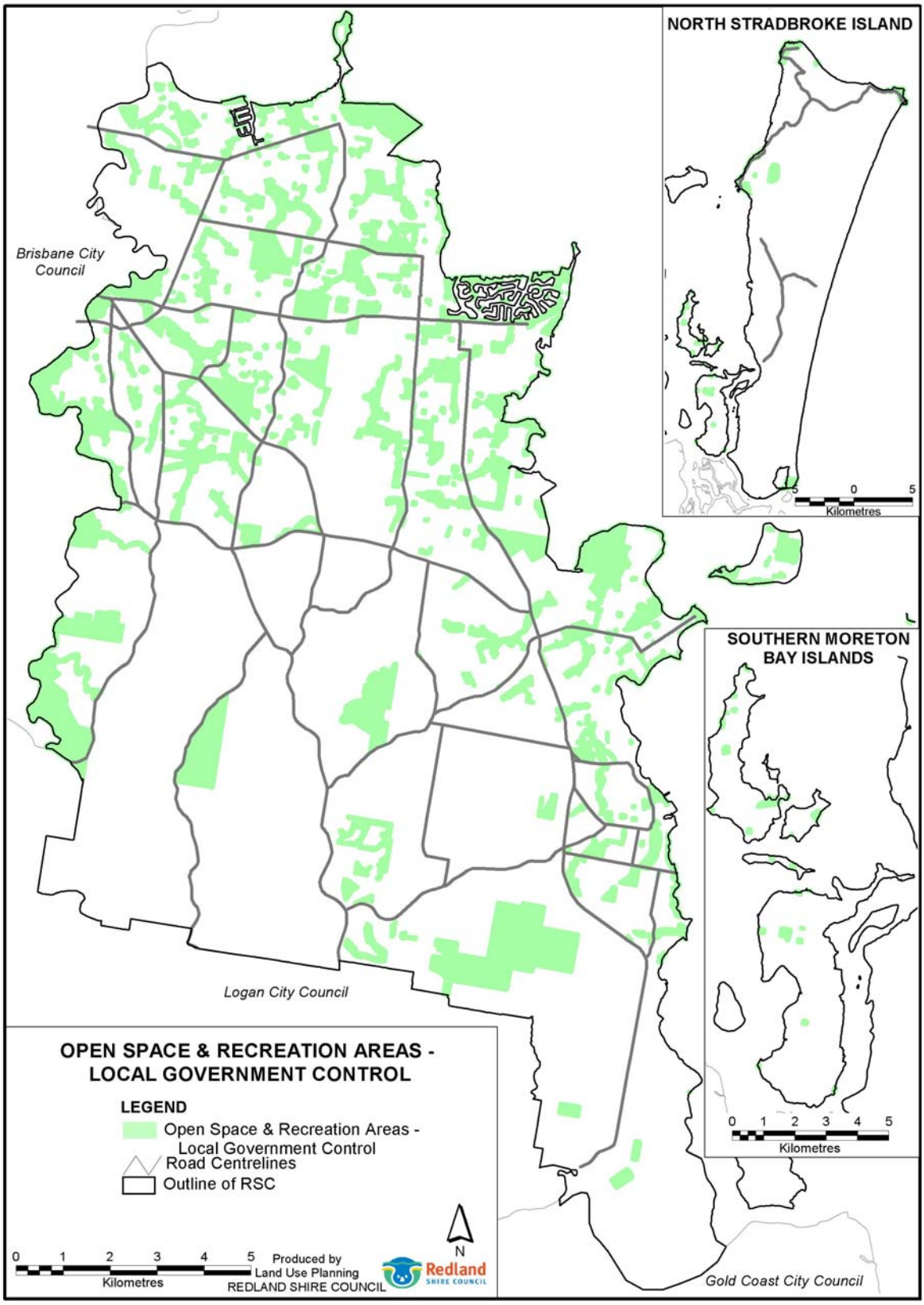

Diagram 7 - Movement Network

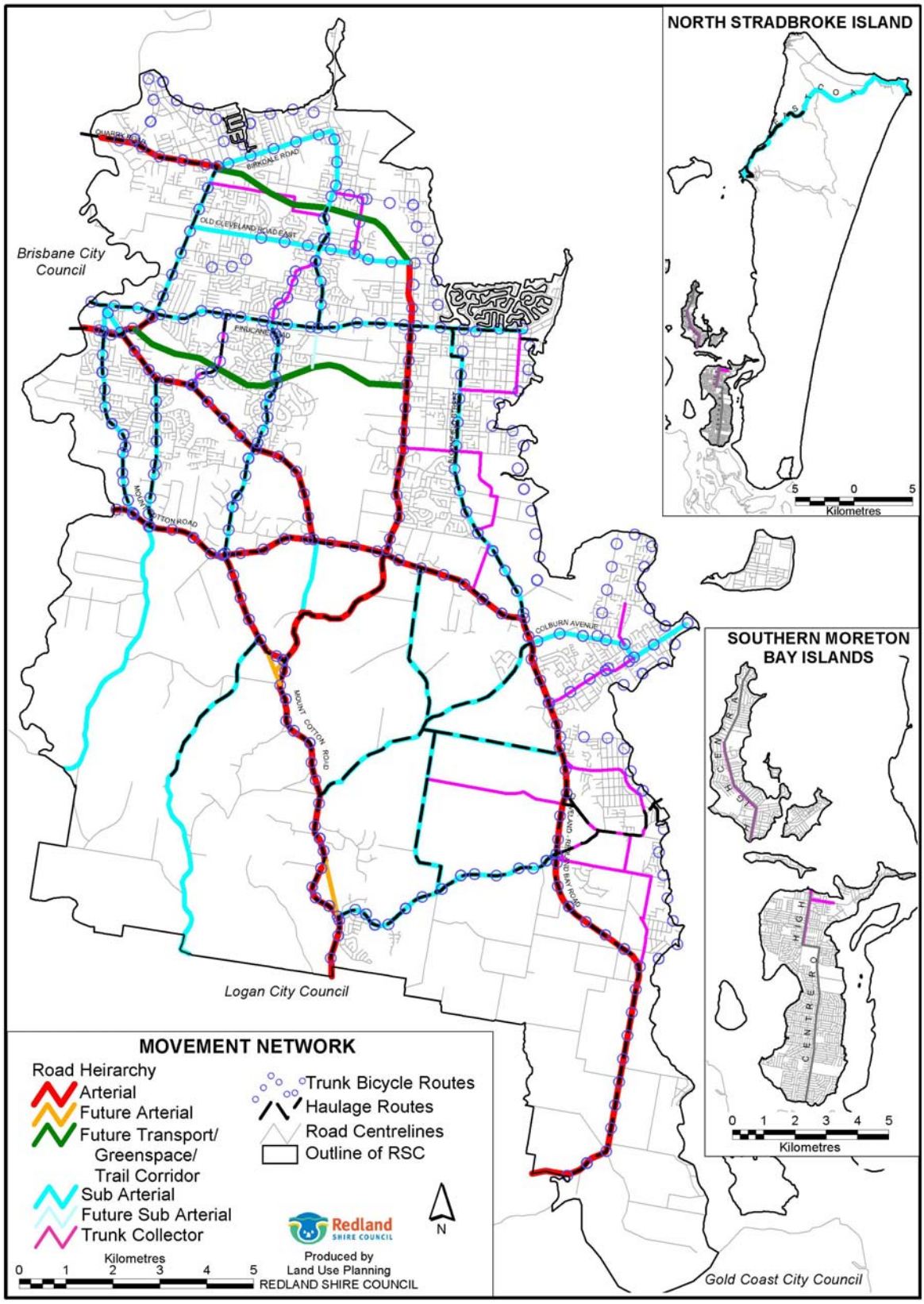

Strategic Framework

Diagram 8 - Public Transport Network

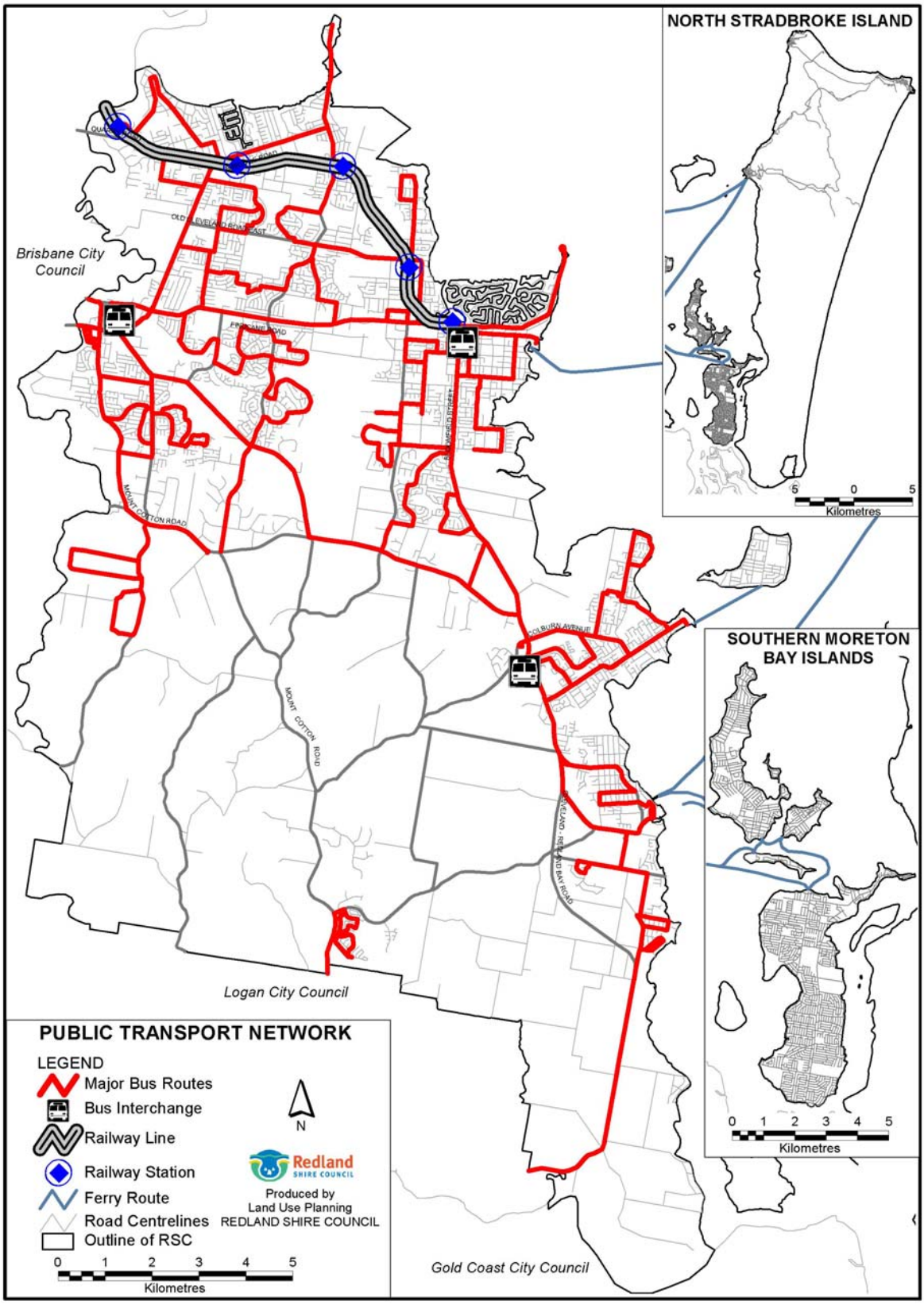

Strategic Framework

this page purposely
left blank

Part 4 - Zones

Note -

Summary of Zones by Category

Residential Zones

- Low Density Residential
- Medium Density Residential
- Point Lookout Residential
- Point Lookout Tourist
- SMBI Residential
- Urban Residential

Centre Zones

- District Centre
- Local Centre
- Major Centre
- Neighbourhood Centre
- Point Lookout Centre
- SMBI Centre

Industrial Zones

- Commercial Industry
- General Industry
- Island Industry
- Marine Activity

Environmental Zones

- Conservation
- Environmental Protection
- Park Residential

Other Zones

- Community Purposes
- Emerging Urban Community
- Investigation
- Open Space
- Rural Non-Urban

this page purposely
left blank

Division 1 - Commercial Industry Zone

4.1.1 Introduction

(1) This division contains the provisions for the Commercial Industry Zone. They are -

(a) The Commercial Industry Zone Tables of Assessment, that incorporates -
(i) Levels of assessment for development in the Commercial Industry Zone (section 4.1.2);
(ii) Assessment criteria for development in the Commercial Industry Zone (section 4.1.3);
(iii) Commercial Industry Zone - Table of Assessment for Material Change of Use of Premises (section 4.1.4);
(iv) Commercial Industry Zone - Table of Assessment for Other Development not associated with a Material Change of Use of Premises (section 4.1.5).

(b) The Commercial Industry Zone Code, that incorporates -
(i) Compliance with the Commercial Industry Zone Code (section 4.1.6);
(ii) Overall Outcomes for the Commercial Industry Zone Code (section 4.1.7);
(iii) Specific Outcomes and Probable Solutions applicable to Assessable Development (section 4.1.8).

4.1.2 Levels of assessment for development in the Commercial Industry Zone

(1) Sections 4.1.4 and 4.1.5 identify the level of assessment for development in the Commercial Industry Zone, as follows -

(a) section 4.1.4 Commercial Industry Zone - Table of Assessment for Making a Material Change of Use of Premises[4.1] -
(i) column 1 identifies uses that are exempt, self-assessable or assessable;
(ii) column 2 identifies the level of assessment for the uses listed in column 1;
(iii) the use is impact assessable where -
a. it is defined in Part 9 - Schedule 3 - Dictionary, Division 1 - Uses and is not listed in column 1; or
b. it is listed in column 1 and does not comply with the level of assessment qualifications listed in column 2; or
c. it is not defined in Part 9 - Schedule 3 - Dictionary, Division 1 - Uses.

(b) section 4.1.5 Commercial Industry Zone - Table of Assessment for Other Development not associated with a Material Change of Use of Premises -
(i) column 1 identifies other development that is exempt, self-assessable or assessable;
(ii) column 2 identifies the level of assessment for other development listed in column 1;
(iii) where the other development is not listed in column 1 it is exempt.

(2) Overlays may alter the level of assessment identified in (1)(a) and (b)[4.2].

[4.1] Works associated with an application for a material change of use of premises may be assessed together with the material change of use.
[4.2] Refer to Part 5 - Overlays to determine the level of assessment for the use or other development where an Overlay affects the lot and Part 1, section 1.2.5(10)(f) that explains how the highest level of assessment applies.

4.1.3 Assessment criteria for development in the Commercial Industry Zone

(1) Development in the Commercial Industry Zone is assessed against the assessment criteria listed in column 3 of sections 4.1.4 and 4.1.5, as follows -

(a) acceptable solutions of applicable codes for self-assessable development; or

(b) applicable codes for code assessable development.

(2) Self-assessable development that does not comply with all the acceptable solutions of the applicable codes is assessable development.

(3) Impact assessable development will be assessed against all relevant provisions of the Redlands Planning Scheme.

Note -

- The level of assessment indicated within section 4.1.4 - Commercial Industry Zone - Table of Assessment for Material Change of Use of Premises may be affected by Division 2 of the Regulatory Provisions of the *SEQ Regional Plan 2005 - 2026*.
- The level of assessment for reconfiguration as indicated within section 4.1.5 - Commercial Industry Zone - Table of Assessment for Other Development not associated with a Material Change of Use of Premises, where within the Regional Landscape and Rural Production Area or Investigation Area of the *SEQ Regional Plan 2005 - 2026* -
  - complies with Division 3 of the Regulatory Provisions;
  - has a minimum lot size of 100 hectares, unless the subdivision meets an exclusion documented in Division 3.

4.1.4 Commercial Industry Zone - Table of Assessment for Material Change of Use of Premises

Commercial Industry Zone - Table of Assessment for Material Change of Use of Premises

column 1	column 2	column 3
Use[4.3]	**Level of Assessment**[4.4]	**Assessment Criteria**
Brothel	Code Assessable	■ Commercial Industry Zone Code ■ *Prostitution Regulation 2000* IDAS Code[4.5] ■ Access and Parking Code ■ Development Near Underground Infrastructure Code ■ Erosion Prevention and Sediment Control Code ■ Excavation and Fill Code ■ Infrastructure Works Code ■ Landscape Code ■ Stormwater Management Code
Bulky Goods Showroom	Self-Assessable If complying with the assessment criteria being the acceptable solutions listed in column 3 Code Assessable If not self-assessable	■ Acceptable Solutions in section 8.4.4 of the Commercial Industry Activity Code ■ Commercial Industry Zone Code ■ Access and Parking Code

[4.3] See Part 9 - Schedule 3 - Dictionary, Division 1 - Uses.
[4.4] See Part 9 - Schedule 3 - Dictionary, Division 2 - Administrative Terms for a definition of level of assessment.
[4.5] As contained in section 15 of the *Prostitution Regulation 2000* and legislated by Part 8 section 140(2)(f) of the *Prostitution Act 1999.*

Commercial Industry Zone - Table of Assessment for Material Change of Use of Premises

column 1	column 2	column 3
Use[4.3]	**Level of Assessment**[4.4]	**Assessment Criteria**
		■ Development Near Underground Infrastructure Code ■ Erosion Prevention and Sediment Control Code ■ Excavation and Fill Code ■ Infrastructure Works Code ■ Landscape Code ■ Stormwater Management Code
Caretakers Dwelling	Code Assessable	■ Commercial Industry Zone Code ■ Caretakers Dwelling Code
Car Wash Facility	Self-Assessable If complying with the assessment criteria being the acceptable solutions listed in column 3 Code Assessable If not self-assessable	■ Acceptable Solutions in section 8.4.4 of the Commercial Industry Activity Code ■ Commercial Industry Zone Code ■ Access and Parking Code ■ Development Near Underground Infrastructure Code ■ Erosion Prevention and Sediment Control Code ■ Excavation and Fill Code ■ Infrastructure Works Code ■ Landscape Code ■ Stormwater Management Code
Display and Sale Activity	Self-Assessable If complying with the assessment criteria being the acceptable solutions listed in column 3 Code Assessable If not self-assessable	■ Acceptable Solutions in section 8.4.4 of the Commercial Industry Activity Code ■ Commercial Industry Zone Code ■ Access and Parking Code ■ Development Near Underground Infrastructure Code ■ Erosion Prevention and Sediment Control Code ■ Excavation and Fill Code ■ Infrastructure Works Code ■ Landscape Code ■ Stormwater Management Code
Emergency Service	Code Assessable	■ Commercial Industry Zone Code ■ Access and Parking Code ■ Development Near Underground Infrastructure Code ■ Erosion Prevention and Sediment Control Code ■ Excavation and Fill Code ■ Infrastructure Works Code ■ Landscape Code ■ Stormwater Management Code

Commercial Industry Zone - Table of Assessment for Material Change of Use of Premises

column 1	column 2	column 3
Use[4.3]	**Level of Assessment**[4.4]	**Assessment Criteria**
Estate Sales Office	Self-Assessable If complying with the assessment criteria being the acceptable solutions listed in column 3 Code Assessable If not self-assessable	■ Acceptable Solutions in section 6.12.4 of the Estate Sales Office Code ■ Acceptable Solutions in section 8.5.4 of the Development Near Underground Infrastructure Code ■ Commercial Industry Zone Code ■ Estate Sales Office Code ■ Access and Parking Code ■ Development Near Underground Infrastructure Code
Funeral Parlour	Self-Assessable If complying with the assessment criteria being the acceptable solutions listed in column 3 Code Assessable If not self-assessable	■ Acceptable Solutions in section 8.4.4 of the Commercial Industry Activity Code ■ Commercial Industry Zone Code ■ Access and Parking Code ■ Development Near Underground Infrastructure Code ■ Erosion Prevention and Sediment Control Code ■ Excavation and Fill Code ■ Infrastructure Works Code ■ Landscape Code ■ Stormwater Management Code
Garden Centre	Self-Assessable If complying with the assessment criteria being the acceptable solutions listed in column 3 Code Assessable If not self-assessable	■ Acceptable Solutions in section 8.4.4 of the Commercial Industry Activity Code ■ Commercial Industry Zone Code ■ Access and Parking Code ■ Development Near Underground Infrastructure Code ■ Erosion Prevention and Sediment Control Code ■ Excavation and Fill Code ■ Infrastructure Works Code ■ Landscape Code ■ Stormwater Management Code
General Industry	Self-Assessable If - (1) 400m^2 or less gross floor area; (2) Complying with the assessment criteria being the acceptable solutions listed in column 3 Code Assessable If -	■ Acceptable Solutions in section 8.4.4 of the Commercial Industry Activity Code ■ Commercial Industry Zone Code ■ Access and Parking Code

Commercial Industry Zone - Table of Assessment for Material Change of Use of Premises

column 1	column 2	column 3
Use[4.3]	**Level of Assessment**[4.4]	**Assessment Criteria**
	(1) Not self-assessable; (2) 2500m^2 or less gross floor area Otherwise - Impact Assessable	■ Development Near Underground Infrastructure Code ■ Erosion Prevention and Sediment Control Code ■ Excavation and Fill Code ■ Infrastructure Works Code ■ Landscape Code ■ Stormwater Management Code
Indoor Recreation Facility	Code Assessable	■ Commercial Industry Zone Code ■ Access and Parking Code ■ Development Near Underground Infrastructure Code ■ Erosion Prevention and Sediment Control Code ■ Excavation and Fill Code ■ Infrastructure Works Code ■ Landscape Code ■ Stormwater Management Code
Landscape Supply Depot	Self-Assessable If complying with the assessment criteria being the acceptable solutions listed in column 3 Code Assessable If not self-assessable	■ Acceptable Solutions in section 8.4.4 of the Commercial Industry Activity Code ■ Commercial Industry Zone Code ■ Access and Parking Code ■ Development Near Underground Infrastructure Code ■ Erosion Prevention and Sediment Control Code ■ Excavation and Fill Code ■ Infrastructure Works Code ■ Landscape Code ■ Stormwater Management Code
Minor Utility	Exempt	

Commercial Industry Zone

Commercial Industry Zone - Table of Assessment for Material Change of Use of Premises

column 1	column 2	column 3
Use[4.3]	**Level of Assessment**[4.4]	**Assessment Criteria**
Park	Self-Assessable If - (1) Being undertaken by the local government; (2) On land in the ownership or control of the local government; (3) Complying with the assessment criteria being the acceptable solutions listed in column 3 Code Assessable If not self-assessable	■ Acceptable Solutions in section 6.20.4 of the Park Code ■ Acceptable Solutions of section 8.5.4 of the Development Near Underground Infrastructure Code ■ Commercial Industry Zone Code ■ Park Code ■ Access and Parking Code ■ Development Near Underground Infrastructure Code ■ Infrastructure Works Code ■ Landscape Code ■ Stormwater Management Code
Produce Store	Self-Assessable If complying with the assessment criteria being the acceptable solutions listed in column 3 Code Assessable If not self-assessable	■ Acceptable Solutions in section 8.4.4 of the Commercial Industry Activity Code ■ Commercial Industry Zone Code ■ Access and Parking Code ■ Development Near Underground Infrastructure Code ■ Excavation and Fill Code ■ Infrastructure Works Code ■ Landscape Code ■ Stormwater Management Code
Retail Warehouse	Self-Assessable If complying with the assessment criteria being the acceptable solutions listed in column 3 Code Assessable If not self-assessable	■ Acceptable Solutions in section 8.4.4 of the Commercial Industry Activity Code ■ Commercial Industry Zone Code ■ Access and Parking Code ■ Development Near Underground Infrastructure Code ■ Erosion Prevention and Sediment Control Code ■ Excavation and Fill Code ■ Infrastructure Works Code ■ Landscape Code ■ Stormwater Management Code
Road	Exempt	

Commercial Industry Zone - Table of Assessment for Material Change of Use of Premises

column 1	column 2	column 3
Use[4.3]	**Level of Assessment**[4.4]	**Assessment Criteria**
Service Industry	Self-Assessable If complying with the assessment criteria being the acceptable solutions listed in column 3 Code Assessable If not self-assessable	■ Acceptable Solutions in section 8.4.4 of the Commercial Industry Activity Code ■ Commercial Industry Zone Code ■ Access and Parking Code ■ Development Near Underground Infrastructure Code ■ Erosion Prevention and Sediment Control Code ■ Excavation and Fill Code ■ Infrastructure Works Code ■ Landscape Code ■ Stormwater Management Code
Service Station	Self-Assessable If complying with the assessment criteria being the acceptable solutions listed in column 3 Code Assessable If not self-assessable	■ Acceptable Solutions in section 8.4.4 of the Commercial Industry Activity Code ■ Commercial Industry Zone Code ■ Service Station Code ■ Access and Parking Code ■ Development Near Underground Infrastructure Code ■ Erosion Prevention and Sediment Control Code ■ Excavation and Fill Code ■ Infrastructure Works Code ■ Landscape Code ■ Stormwater Management Code
Shop	Code Assessable If - (1) Associated with the primary use on the premises; (2) 200m^2 or less gross floor area Otherwise - Impact Assessable	■ Commercial Industry Zone Code ■ Access and Parking Code ■ Development Near Underground Infrastructure Code ■ Erosion Prevention and Sediment Control Code ■ Excavation and Fill Code ■ Infrastructure Works Code ■ Landscape Code ■ Stormwater Management Code

Commercial Industry Zone - Table of Assessment for Material Change of Use of Premises

column 1	column 2	column 3
Use[4.3]	**Level of Assessment**[4.4]	**Assessment Criteria**
Telecommunications Facility	Self-Assessable If complying with the assessment criteria being the acceptable solutions listed in column 3 Code Assessable If not self-assessable	■ Acceptable Solutions in section 6.26.4 of the Telecommunications Facility Code ■ Acceptable Solutions in section 8.5.4 of the Development Near Underground Infrastructure Code ■ Acceptable Solutions in section 8.6.4 of the Erosion Prevention and Sediment Control Code ■ Acceptable Solutions A1.(1)(a) and (c) in section 7.6.4 of the Excavation and Fill Code ■ Commercial Industry Zone Code ■ Telecommunications Facility Code ■ Access and Parking Code ■ Development Near Underground Infrastructure Code ■ Erosion Prevention and Sediment Control Code ■ Excavation and Fill Code ■ Infrastructure Works Code ■ Landscape Code
Temporary Use	Self-Assessable If complying with the assessment criteria being the acceptable solutions listed in column 3 Code Assessable If not self-assessable	■ Acceptable Solutions in section 6.27.4 of the Temporary Use Code ■ Commercial Industry Zone Code ■ Temporary Use Code
Utility Installation	Code Assessable	■ Commercial Industry Zone Code ■ Access and Parking Code ■ Development Near Underground Infrastructure Code ■ Erosion Prevention and Sediment Control Code ■ Excavation and Fill Code ■ Landscape Code ■ Stormwater Management Code
Vehicle Depot	Self-Assessable If - (1) Storing no more than 50 vehicles; (2) Complying with the assessment criteria being the acceptable solutions listed in column 3 Code Assessable If not self-assessable	■ Acceptable Solutions in section 8.4.4 of the Commercial Industry Activity Code ■ Commercial Industry Zone Code ■ Access and Parking Code ■ Development Near Underground Infrastructure Code

Commercial Industry Zone - Table of Assessment for Material Change of Use of Premises

column 1	column 2	column 3
Use[4.3]	**Level of Assessment**[4.4]	**Assessment Criteria**
		■ Erosion Prevention and Sediment Control Code ■ Excavation and Fill Code ■ Infrastructure Works Code ■ Landscape Code ■ Stormwater Management Code
Vehicle Parking Station	Code Assessable	■ Commercial Industry Zone Code ■ Access and Parking Code ■ Development Near Underground Infrastructure Code ■ Erosion Prevention and Sediment Control Code ■ Excavation and Fill Code ■ Infrastructure Works Code ■ Landscape Code ■ Stormwater Management Code
Vehicle Repair Premises	Self-Assessable If complying with the assessment criteria being the acceptable solutions listed in column 3 Code Assessable If not self-assessable	■ Acceptable Solutions in section 8.4.4 of the Commercial Industry Activity Code ■ Commercial Industry Zone Code ■ Access and Parking Code ■ Development Near Underground Infrastructure Code ■ Erosion Prevention and Sediment Control Code ■ Excavation and Fill Code ■ Infrastructure Works Code ■ Landscape Code ■ Stormwater Management Code
Veterinary Surgery	Self-Assessable If complying with the assessment criteria being the acceptable solutions listed in column 3 Code Assessable If not self-assessable	■ Acceptable Solutions in section 8.4.4 of the Commercial Industry Activity Code ■ Commercial Industry Zone Code ■ Access and Parking Code ■ Development Near Underground Infrastructure Code ■ Erosion Prevention and Sediment Control Code ■ Excavation and Fill Code ■ Infrastructure Works Code ■ Landscape Code ■ Stormwater Management Code

Commercial Industry Zone - Table of Assessment for Material Change of Use of Premises

column 1	column 2	column 3
Use[4.3]	**Level of Assessment[4.4]**	**Assessment Criteria**
Warehouse	Self-Assessable If complying with the assessment criteria being the acceptable solutions listed in column 3 Code Assessable If not self-assessable	■ Acceptable Solutions in section 8.4.4 of the Commercial Industry Activity Code ■ Commercial Industry Zone Code ■ Access and Parking Code ■ Development Near Underground Infrastructure Code ■ Erosion Prevention and Sediment Control Code ■ Excavation and Fill Code ■ Infrastructure Works Code ■ Landscape Code ■ Stormwater Management Code
Defined uses not listed in column 1	Impact Assessable	
Defined uses listed in column 1 that do not comply with the level of assessment qualifications in column 2	Impact Assessable	
Uses not defined in Part 9 - Schedule 3 - Dictionary, Division 1 - Uses	Impact Assessable	

4.1.5 Commercial Industry Zone - Table of Assessment for Other Development not associated with a Material Change of Use

Commercial Industry Zone - Table of Assessment for Other Development

column 1	column 2	column 3
Other Development	**Level of Assessment[4.6]**	**Assessment Criteria**
Reconfiguration for -		
Creating lots by subdividing another lot by Standard Format Plan[4.7]	Code Assessable If the proposal contains less than 20 lots Otherwise - Impact Assessable	■ Commercial Industry Zone Code ■ Reconfiguration Code ■ Development Near Underground Infrastructure Code ■ Excavation and Fill Code ■ Infrastructure Works Code ■ Stormwater Management Code
Creating lots by subdividing another lot by - ■ Building Format Plan; or ■ Volumetric Format Plan	Code Assessable	■ Commercial Industry Zone Code ■ Reconfiguration Code
■ Rearranging the boundaries of a lot by registering a plan of subdivision; or ■ Dividing land into parts by Agreement; or ■ Creating an easement giving access to a lot from a constructed road	Code Assessable	■ Reconfiguration Code
Building Work for -		
Communications Structures	Exempt If minor building work[4.8] Self-Assessable If - (1) Not exempt; (2) Complying with the assessment criteria being the acceptable solutions listed in column 3 Code Assessable If not self-assessable	■ Acceptable Solutions in section 7.2.4 of the Communications Structures Code ■ Communications Structures Code

[4.6] See Part 9 - Schedule 3 - Dictionary, Division 2 - Administrative Terms for a definition of level of assessment.
[4.7] Whether or not having a Community Management Statement.
[4.8] See Part 9 - Schedule 3 - Dictionary, Division 2 - Administrative Terms for a definition of minor building work.

Commercial Industry Zone - Table of Assessment for Other Development

column 1	column 2	column 3
Other Development	**Level of Assessment[4.6]**	**Assessment Criteria**
Domestic Additions	Code Assessable	■ Commercial Industry Zone Code ■ Domestic Additions Code ■ Development Near Underground Infrastructure Code ■ Erosion Prevention and Sediment Control Code ■ Excavation and Fill Code ■ Stormwater Management Code
Domestic Outbuilding	Code Assessable	■ Commercial Industry Zone Code ■ Domestic Outbuilding Code ■ Development Near Underground Infrastructure Code ■ Erosion Prevention and Sediment Control Code ■ Excavation and Fill Code
On-site raising or relocation of an existing dwelling unit	Code Assessable	■ Commercial Industry Zone Code ■ On-Site Raising or Relocation Code ■ Development Near Underground Infrastructure Code ■ Erosion Prevention and Sediment Control Code ■ Excavation and Fill Code ■ Infrastructure Works Code ■ Stormwater Management Code
Private Swimming Pool	Code Assessable	■ Commercial Industry Zone Code ■ Private Swimming Pool Code ■ Development Near Underground Infrastructure Code ■ Erosion Prevention and Sediment Control Code ■ Excavation and Fill Code
Private Tennis Court	Code Assessable	■ Commercial Industry Zone Code ■ Private Tennis Court Code ■ Erosion Prevention and Sediment Control Code ■ Excavation and Fill Code ■ Landscape Code
Operational Work for -		
Constructing a Domestic Driveway Crossover	Code Assessable	■ Domestic Driveway Crossover Code

Commercial Industry Zone - Table of Assessment for Other Development

column 1	column 2	column 3
Other Development	**Level of Assessment[4.6]**	**Assessment Criteria**
Excavation and Fill	Exempt If - (1) Disturbing less than 50m^3 of soil; (2) A height/depth not exceeding 300mm measured from ground level Self-Assessable If - (1) Not exempt; (2) Complying with the assessment criteria being the acceptable solutions listed in column 3 Code Assessable If not self-assessable	■ Acceptable Solutions in section 8.6.4 of the Erosion Prevention and Sediment Control Code ■ Acceptable Solutions A1.(1)(b),(c),(d) in section 7.6.4 of the Excavation and Fill Code ■ Erosion Prevention and Sediment Control Code ■ Excavation and Fill Code
Placing an Advertising Device on Premises	Self-Assessable If complying with the assessment criteria being the acceptable solutions listed in column 3 Code Assessable If not self-assessable	■ Acceptable Solutions in section 7.1.4 of the Advertising Devices Code ■ Advertising Devices Code
Operational Work for Reconfiguring a Lot (by Standard Format Plan)	Code Assessable	■ Reconfiguration Code ■ Development Near Underground Infrastructure Code ■ Erosion Prevention and Sediment Control Code ■ Excavation and Fill Code ■ Infrastructure Works Code ■ Landscape Code ■ Stormwater Management Code
Private Waterfront Structure	Code Assessable	■ Commercial Industry Zone Code ■ Private Waterfront Structure Code ■ Development Near Underground Infrastructure Code ■ Erosion Prevention and Sediment Control Code ■ Excavation and Fill Code
All other development not listed in column 1	Exempt	

4.1.6 Compliance with Commercial Industry Zone Code

(1) Development that is consistent with the specific outcomes in section 4.1.8 complies with the Commercial Industry Zone Code.

Note -

The following planning scheme policies will assist in achieving specific outcomes within the Commercial Industry Zone Code -

- Planning Scheme Policy 5 - Environmental Emissions;
- Planning Scheme Policy 9 - Infrastructure Works.

4.1.7 Overall Outcomes for Commercial Industry Zone Code

(1) The overall outcomes are the purpose of the Commercial Industry Zone Code.

(2) The overall outcomes sought for the Commercial Industry Zone Code are described by six key characteristics[4.9] -

(a) Uses and Other Development;
(b) Built Form and Density;
(c) Amenity;
(d) Pollution Prevention;
(e) Environment;
(f) Infrastructure.

Each of these is detailed below.

(a) Uses and Other Development

(i) Provide land for industrial, storage and display uses that -
a. are light industrial and service related industrial activities;
b. are for the wholesale or retail sale of bulky goods and other specialised goods and services from larger floor space premises;
c. store goods for distribution and sale at other locations;
d. support the role and function of centres, while not undermining the retail and commercial functions of centres;
e. serve the city and sub-regional community;
f. provide local employment opportunities;
g. in sub-area CM1 - are commercial and retail sale activities that recognise the prominent gateway location.

(ii) Provide for non-industrial uses that -
a. are compatible with industrial uses;
b. support the role and function of centres, while not undermining the retail and commercial functions of centres;
c. are ancillary to the primary use on the lot or premises;
d. are for indoor recreational and sport related activities;
e. serve the immediate workforce.

(iii) Other development does not compromise uses and associated activities expected in the zone.

(b) Built Form and Density

(i) Uses and other development have a site layout that -
a. utilise land efficiently;
b. provide for vehicle access, parking, manoeuvring and loading/unloading areas;
c. contribute to security of property and safety of people;

[4.9] In combination, the overall outcomes in section 4.1.7(2)(a)-(f) define the character of the Commercial Industry Zone.

d. minimise noise generation and other negative impacts.

(ii) The scale of uses and other development achieve a high standard of built form that -
a. recognises the location of this zone in proximity to centres and along the major movement network;
b. adopt a building height, width, depth and bulk that minimise the visual impacts of the large-scale built form associated with uses excepted in this zone;
c. contributes to an attractive streetscape along all road frontages;
d. in sub-area CM1- incorporates high quality materials and reinforces the area's strategic position as a gateway to the Capalaba Major Centre.

(iii) The density of uses and other development -
a. result in the coordinated and efficient use of land;
b. provide for employee and customer car parking, landscaping and service areas.

(c) Amenity

(i) Uses and other development achieve a high standard of environmental amenity by -
a. providing a landscaped setting that complements the large scale nature of built form and the location of this zone in proximity to centres and along the major movement network;
b. minimising visual clutter associated with fencing and signage along all street frontages.

(d) Pollution Prevention

(i) Uses and other development operate in a manner that -
a. is within acceptable environmental standards;
b. mitigate adverse impacts associated with light, noise and air, among other emissions;
c. utilise best practice techniques and operations to minimise adverse impacts associated with stormwater run-off and other potentially water or soil contaminating substances.

(e) Environment

(i) The scale and operational attributes of uses and other development minimise adverse impacts on the environment by -
a. responding to topographical features;
b. limiting the need for excavation and fill;
c. protecting the site from erosion;
d. retaining native plants;
e. maximising the use of plant species that are native to the area;
f. incorporating best practice stormwater management and enhancing water quality.

(f) Infrastructure

(i) Uses and other development -
a. make efficient use of existing infrastructure;
b. provide for the extension of infrastructure in an orderly and cost effective manner;
c. do not result in unacceptable risk to community infrastructure.

(ii) Uses and other development are serviced by infrastructure including -
a. reticulated water;
b. reticulated sewerage;
c. stormwater drainage;
d. constructed road access;
e. energy;
f. telecommunications.

(iii) Uses manage the generation, storage, disposal, recycling and re-use of waste to a standard commensurate with the operational activities of the use.

(iv) Uses and other development reinforce an attractive, integrated, legible, efficient and safe movement network that -
   a. incorporate a full range of modes including public transport, passenger vehicles, walking and cycling;
   b. provide pedestrian, cycle and vehicle movement networks that maximise connectivity, permeability and ease of mobility.

4.1.8 Specific Outcomes and Probable Solutions applicable to Assessable Development

Assessable Development			
Specific Outcomes		**Probable Solutions**	
	Uses and Other Development -		
S1.1	Uses identified as inconsistent in Table 1 are not established in the zone.	**P1.1**	No probable solution identified.
S1.2	(3) The following activities are consistent in the zone - (a) the repair, servicing, assembling and making of products; (b) high technology industries, scientific research or similar; (c) large scale retail or wholesale display activities that are not suitable to locate in centres; (d) storage and transport logistics; (e) the supply, repair and service of agricultural equipment; (f) value adding or further processing of primary products; (g) in sub-area CM1 - commercial uses or retail sale of bulky goods.	**P1.2**	No probable solution identified.
S1.3	(1) Other activities considered compatible are those that - (a) support nearby centres without compromising the commercial, retail, community service, cultural and entertainment or tourism role and function of those centres; (b) are compatible with industrial activities; (c) require large land areas and industrial style and size buildings; (d) serve the immediate workforce.	**P1.3**	(1) Other activities include - (a) indoor recreational facilities; or (b) emergency services; or (c) child care centres; or (d) activities ancillary to an industrial use, including administration offices or display areas for products manufactured, assembled or finished on the site and where it is less than 500m^2 gross floor area or 25 percent of the total gross floor area of the use, whichever is the lesser; or (e) shops where ancillary to the industrial use and 200m^2 or less gross floor area; or (f) refreshment establishments with 150m^2 or less gross floor area.
S1.4	Other development does not hinder the ongoing operation and future economic opportunities of uses expected within the zone.	**P1.4**	No probable solution identified.

Assessable Development			
Specific Outcomes		**Probable Solutions**	
	Built Form and Density -		
S2.1	(1) Site layout - (a) uses the site efficiently and allocates sufficient areas for all activities related to the use; (b) provides for vehicle access to the use that does not - (i) adversely affect the function of the road from which the use is accessed; (ii) utilise residential access streets or access places; (c) locates employee parking, manoeuvring and loading/unloading areas to the side or rear of the site; (d) locates customer parking at visible locations that have easy and direct pedestrian access to building entries; (e) provides opportunities to consolidate and co-ordinate on-site parking and service areas; (f) is designed to maximise personal safety for employees and visitors to the site; (g) where having a common boundary with the Urban Residential, Medium Density Residential or Conservation Zones ensure that - (i) openings are not located in walls facing the common boundary; (ii) potentially noise emitting equipment, machinery, or outdoor work areas are located as far as practical from these zones; (iii) built form does not result in the overshadowing or loss of privacy to properties in these zones.	**P2.1**	(1) No probable solution identified. **Note -** Refer to Part 8 - Division 1 - Access and Parking for requirements related to vehicle access and parking outcomes.
S2.2	(1) Setbacks - (a) allow for the safe and efficient use of the site; (b) allow for planted landscaping along street frontages; (c) provide employee and customer car parking at visible locations that have easy and direct pedestrian access to building entries; (d) contribute to the building form and provide an attractive streetscape; (e) enable the effective location of	**P2.2**	(1) Setback - (a) of buildings from the primary road frontage is between 10 and 15 metres; (b) to the side and rear boundaries is - (i) between 0 and 5 metres for buildings, structures or designated outdoor work areas; or (ii) greater than 10 metres where adjoining an Urban Residential or Medium Density Residential Zone;

Assessable Development			
Specific Outcomes		**Probable Solutions**	
	overland flow paths and utility infrastructure; (f) are increased where required to provide - (i) overland flow paths associated with stormwater management, (ii) other infrastructure; (iii) car parking; (iv) access to service areas; (2) On corner lots, setbacks to the secondary road are consistent with primary road setbacks; (3) In sub-area CM1 - setbacks reinforce the strategic position of the locality as a gateway to the Capalaba Major Centre, and enable a high level of pedestrian activity.		(2) Comply with front setback requirements in P2.2(1); (3) Front setbacks in sub-area CM1 are between 3 and 5 metres.
S2.3	(1) Building height - (a) minimises the visual impact of the large scale built form associated with this zone; (b) in sub-area CM1 reinforces the strategic positioning of the locality as a gateway to the Capalaba Major Centre.	**P2.3**	(1) Building height is no greater than - (a) 10 metres; or (b) 15 metres in sub-area CM1 where the development incorporates commercial offices above ground level; or (c) 8.5 metres at any part of the building having a common boundary with the Urban Residential Zone or Medium Density Residential Zone.
S2.4	(1) Building design and materials - (a) are compatible with a high quality corporate, commercial or industrial design; (b) promote an active and attractive streetscape through locating building entries, display windows, showrooms, offices and customer service areas towards the street frontage; (c) incorporate articulated walls with horizontal and vertical variation, solid and void, shadow detail and colour to reduce the impact of expansive blank walls; (d) utilise non-reflective materials.	**P2.4**	(1) No probable solution identified.
S2.5	(1) Site coverage of buildings balances built and unbuilt areas to - (a) assist in retaining existing native plants; (b) provide space for on-site landscaping and planting; (c) provide areas for access, parking, manoeuvring, outdoor	**P2.5**	(1) Uses and other development are designed so that - (a) building site coverage is a maximum of - (i) 50 percent of the site area at the ground floor level; (ii) 65 percent of the site area above ground floor level; (b) total development area

Assessable Development			
Specific Outcomes		**Probable Solutions**	
	work and service functions; (d) facilitate stormwater management.		including access, parking, service and outdoor work areas is a maximum of 90 percent of the site area; (c) planted landscaping accommodates at least 10 percent of the site area.
S2.6	Lot sizes efficiently utilise this land resource while facilitating uses proposed in the zone.	**P2.6**	Minimum lot size is 1000m^2. **Note -** Refer to Part 7 - Division 11 - Reconfiguration Code for further assessment criteria.
	Amenity -		
S3.1	(1) High quality landscaping including planting, paving and other components of the landscape are provided that - (a) have regard to the proximity and location of the use to the street, and specifically the major movement network; (b) are of a suitable scale relative to the road reserve width and the building size; (c) have regard to the nature and scale of the use and the need for any intensive screen planting where adjoining a sensitive environment; (d) are used to break up the visual bulk of large scale buildings; (e) are sensitive to site attributes and the surrounding natural environment; (f) create visual relief and shade, particularly within car parking areas; (g) are used to screen outdoor storage, work and service or other obtrusive areas from public view; (h) are used to define building entrances and pedestrian paths.	**P3.1**	(1) Landscaping - (a) incorporates a - (i) minimum 3 metre wide planted landscaped area on the primary road frontage, which may be reduced to a minimum width of 2 metres for a maximum of 50 percent of the frontage when incorporating car parking; (ii) minimum 2 metre wide planted landscaped area on any secondary road frontage; (iii) densely planted 6 metre wide landscaped buffer, in combination with a 2 metre high solid fence, where having a common boundary with the Urban Residential or Medium Density Residential Zones; (b) reduces the visual bulk and height of buildings by - (i) incorporating tree planting that will achieve a canopy spread over a minimum of 30 percent of the primary road frontage within 5 years of planting; (ii) ensuring that a minimum of 15 percent of all trees proposed are capable of growing to the height of the eaves of the building; (iii) incorporating under tree ground cover and shrub planting; (c) in car parking areas incorporates planting that provides shade and breaks up

Assessable Development			
Specific Outcomes		**Probable Solutions**	
			large open areas. **Note -** For additional assessment criteria refer to Part 8 - ■ Division 1 - Access and Parking Code; ■ Division 8 - Landscape Code.
S3.2	(1) Fences and non-building walls - (a) are visually attractive and contribute to or blend with planted landscaping and building materials; (b) are designed and detailed to provide visual interest to the streetscape; (c) provide an effective visual and acoustic screen to adjoining sensitive receiving environments; (d) assist in highlighting entrances and pedestrian paths; (e) maximise safety and security.	**P3.2**	(1) Fences and non-building walls - (a) on the property boundary to any street frontage are not greater than 1.2 metres high; (b) at the front and side, where greater than 1.2 metres in height are - (i) erected behind the front building line rather than the property boundary of any street frontage; (ii) screened by landscaping; (c) on rear boundaries are chain wire rather than solid and a colour that blends with the surrounding built, planted or natural environment; (d) which are an extension of retaining walls or earth batters are landscaped or planted; (e) where having a common boundary with the Urban Residential and Medium Density Residential Zones are 2 metres high, solid and incorporate planted landscaping.
S3.3	(1) Signage clutter is minimised, especially to the external streetscape; (2) Communal signage is provided, preferably in the form of an architectural and landscaped feature.	**P3.3**	(1) No probable solution identified; (2) No probable solution identified. **Note -** Refer to Part 7 - Division 1 - Advertising Devices Code for signage assessment criteria.
	Pollution Prevention -		
S4.1	(1) Noise and vibration emissions generated by the operational activities of the use are minimised by - (a) acoustically housing noise emitting plant and equipment; (b) locating, away from sensitive environments - (i) major opening in buildings; (ii) outdoor work areas.	**P4.1**	(1) Noise generated by the use - (a) complies with - (i) Table 2 - Noise levels at the boundary of the Commercial Industry Zone; (ii) Table 3 - Noise levels at the boundary of the nearest residential zone; or (iii) the requirements of any

Assessable Development			
Specific Outcomes		**Probable Solutions**	
			development approval issued under the *Environmental Protection Act 1994*; (b) is minimised between 6pm and 7am Monday to Saturday, and all day Sunday by - (i) not carrying out any activities in outdoor work areas; (ii) limiting indoor activities to office and administrative tasks, and other activities that are not audible or visible from outside the building; (iii) not receiving any deliveries.
S4.2	(1) Uses and other development minimise emissions of dust and odour and the generation of airborne pollutants; (2) Dust impacts of vehicle movements and stockpiling of materials are eliminated or mitigated.	**P4.2**	(1) No probable solution identified; (2) No probable solution identified. **Note -** Refer to Part 11 - Planning Scheme Policy 5 - Environmental Emissions, the *Environmental Protection (Air) Policy 1997*, and relevant legislation for further information on noise and air quality impacts.
S4.3	(1) Artificial lighting does not result in unreasonable disturbance to any person or activity; (2) Glare and reflection from the sun are minimised through material and glazing choice.	**P4.3**	(1) The vertical illumination resulting from direct, reflected or other incidental light emanating from the site does not exceed 8 lux when measured at any point 1.5 metres outside the boundary at or above ground level; (2) No probable solution identified.
S4.4	(1) Land contamination is minimised by - (a) ensuring storage, use and spillage of potential contaminants do not result in the contamination of land; (b) incorporating waste storage and collection measures that protect against spillage of contaminated materials; (c) ensuring storage areas for potentially contaminating substances are roofed and located on impermeable surfaces; (d) incorporating space for accidental spill areas to be bunded and the contaminant retained on-site in an impermeable area/system,	**P4.4**	(1) No probable solution identified.

Assessable Development			
Specific Outcomes		**Probable Solutions**	
	before removal by an approved means.		
S4.5	(1) Emissions of contaminants including heat, radioactivity, electromagnetic radiation or the like do not cause adverse environmental impacts; (2) The use or other development does not involve radioactive or bio-hazardous - (a) materials; (b) processes.	**P4.5**	(1) No probable solution identified; (2) No probable solution identified.
S4.6	(1) Eliminate risk to people, property and the environment from hazards including, fire, explosion and chemical release.	**P4.6**	(1) The use is not defined in the *Dangerous Goods Safety Management Regulation 2001* as - (a) Dangerous Goods Location or Large Dangerous Goods Location; (b) Major Hazardous Facility. **Note -** Refer to Schedule 1 and 2 of the *Dangerous Goods Safety Management Regulation 2001.*
	Environment -		
S5.1	(1) Protect the environment from impacts associated with the use or other development including - (a) stormwater run-off; (b) water quality; (c) erosion and sediment run-off; (d) weed infestation.	**P5.1**	(1) No probable solution identified.
S5.2	(1) Minimise the need for excavation and fill by uses and other development being located and designed to - (a) prevent the unnecessary removal of native plants; (b) protect overland drainage flows; (c) reduce erosion and sediment run-off.	**P5.2**	(1) No probable solution identified. **Note -** Refer to Part 7 - Division 6 - Excavation and Fill for assessment criteria where the site requires earthworks.
S5.3	(1) Landscaping - (a) incorporates plant species native to the local area; (b) maximises use of permeable surfaces to improve the quality and reduce the quantity of stormwater run-off; (c) is incorporated as a component of the stormwater management system; (d) acts as a filter for stormwater	**P5.3**	(1) Landscaping - (a) maximises the use of native species listed in Part 9 - (i) Schedule 10 - Vegetation Species List; (ii) Schedule 9 - Street Trees where within the road reserve. **Note -**

Assessable Development			
Specific Outcomes		**Probable Solutions**	
	run-off from car parking areas contaminated by hydrocarbons.		For additional assessment criteria, refer to Part 8 - ■ Division 8 - Landscape Code; ■ Division 9 - Stormwater Management Code.
	Infrastructure -		
S6.1	Uses and other development efficiently utilise existing infrastructure and do not inhibit future extension of infrastructure.	**P6.1**	No probable solution identified.
S6.2	(1) Uses and other development are serviced by infrastructure including - (a) reticulated water; (b) reticulated sewerage; (c) energy; (d) telecommunications.	**P6.2**	(1) No probable solution identified.
S6.3	(1) Stormwater management for the site - (a) enhances water quality at receiving waters; (b) protects waterways from potential contamination; (c) effectively provide for overland drainage flows due to large hard stand and roof areas associated with built forms in this zone.	**P6.3**	(1) Stormwater management for the site ensures that the quality of stormwater leaving the lot or premises achieves the standards detailed in Part 9 - Schedule 11 - Water Quality Objectives. **Note -** Refer to Part 8 - Division 9 - Stormwater Management Code for stormwater management assessment criteria.
S6.4	(1) Waste and recycling is managed to minimise impacts on the environment and nearby premises by - (a) locating waste and recycling storage areas to protect amenity and to provide safe manual handling of containers; (b) screening waste and recycling container storage areas from view; (c) providing for the cleansing of containers in a manner that does not cause adverse environmental impacts; (2) Uses and other development - (a) provide safe and efficient manoeuvring for waste collection vehicles; (b) ensure all bulk waste and recycling containers are serviced off-street and not on roads with public access; (c) ensure sufficient vertical clearance for container	**P6.4**	(1) No probable solution identified. (2) No probable solution identified. (3) No probable solution identified. **Note -** Refer to Part 11 - Planning Scheme Policy 9 - Infrastructure Works – Chapter 16 – Waste Management for further information on waste and recycling container volume, storage, servicing, screening and cleansing. Refer to Part 8 - Division 1 – Access and Parking Code for waste collection vehicle servicing and manoeuvring assessment criteria.

Assessable Development			
Specific Outcomes		**Probable Solutions**	
	servicing; (d) ensure unobstructed access to containers by collection vehicles; (3) Waste and recycling storage is designed and located to - (a) provide adequate container volume to contain the waste and recyclables; (b) provide recycle containers in an equivalent or greater volume to waste containers; (c) provide a dedicated waste and recycling container storage area that is convenient and safe to use; (d) ensure containers are located on impermeable surfaces.		
S6.5	(1) Vehicle access, parking facilities and service delivery areas are located and designed to - (a) minimise conflicts between pedestrians and cyclists with vehicles and service delivery vehicles; (b) provide for integrated car parking and service delivery areas.	**P6.5**	(1) No probable solution identified. **Note -** For additional assessment criteria, refer to Part 8 - ■ Division 1 - Access and Parking Code; ■ Division 7 - Infrastructure Works Code.
S6.6	(1) Opportunities for cycling as a modal choice for employees and customers are provided through - (a) clearly defined on-site cycle paths and facilities; (b) secure cycle storage areas, and facilities including showers and lockers for employees; (c) provision of cycle racks for customers.	**P6.6**	(1) Cycling facilities include - (a) on-site bicycle facilities that are designed and constructed in accordance with *AUSTROAD's Traffic Engineering Practice, Part 14 - Bicycles;* (b) the following for employees - (i) 1 bicycle space per 350m^2 of gross floor area; (ii) 1 personal locker per 2 bicycle parking spaces; (iii) 1 shower cubicle with a change area per 5 bicycle spaces; or (iv) 1 shower cubicle with a change area if less than 5 bicycle spaces are required; (c) 1 bicycle space per 350m^2 of gross floor area for customers, up to a maximum of 10 spaces.
S6.7	Community infrastructure is able to function effectively during and immediately after flood events.	**P6.7**	Community infrastructure is located at or above the recommended flood levels in Table 4 - Recommended Flood Levels for Community Infrastructure.

Table 1 - Inconsistent Uses

Inconsistent Uses
Aged Persons and Special Needs Housing
Agriculture
Airport
Animal Keeping
Apartment Building
Bed and Breakfast
Cemetery
Commercial Office - except in sub-area CM1
Display Dwelling
Dual Occupancy
Dwelling House
Extractive Industry
Forestry
Health Care Centre
Heavy Industry
High Impact Industry
Home Business
Intensive Agriculture
Marine Services
Mobile Home Park
Multiple Dwelling
Night Club
Outdoor Dining
Outdoor Recreation Facility
Refreshment Establishment - where having more than 150m^2 gross floor area
Relatives apartment
Roadside Stall
Shop - where having more than 200m^2 gross floor area
Small Lot House
Tourist Park

Table 2 - Noise levels at the boundary of the Commercial Industry Zone

Period	Noise level at the boundary of the Commercial Industry Zone[1]
7am - 10pm	Background noise level plus 10 dB(A)
10pm - 7am	Background noise level plus 8 dB(A)

Note[1] - Measured as the adjusted maximum sound pressure level $L_{Amax,adj,T}$ - as defined in the *Noise Measurement Manual* (Environmental Protection Agency, 2000).

Table 3 - Noise levels at boundary of the nearest residential zone

Period	Noise level at the boundary of the nearest residential zone[1]
7am - 10pm	Background noise level plus 5 dB(A)
10pm - 7am	Background noise level plus 3 dB(A)

Note[1] - Measured as the adjusted maximum sound pressure level $L_{Amax,adj,T}$ - as defined in the *Noise Measurement Manual* (Environmental Protection Agency, 2000).

Table 4 - Recommended Flood Levels for Community Infrastructure

Type of Community Infrastructure	Recommended Flood Level AEP (ARI)
Emergency services, other than police facilities	0.2% (1 in 500 year ARI)
Emergency shelters	0.5% (1 in 200 year ARI)
Police facilities	0.5% (1 in 200 year ARI)
Hospitals and associated facilities	0.2% (1 in 500 year ARI)
Stores of valuable records or items of historic or cultural significance, such as galleries and libraries	0.5% (1 in 200 year ARI)
Power stations	0.2% (1 in 500 year ARI)
Major switch yards	0.2% (1 in 500 year ARI)
Substations	0.5% (1 in 200 year ARI)
Sewerage treatment plants	1% (1 in 100 year ARI)
Water treatment plants	0.5% (1 in 200 year ARI)
■ State-controlled roads ■ Works of an electricity entity not otherwise listed in this table ■ Railway lines, stations and associated facilities ■ Aviation facilities ■ Communication network facilities	No specific recommended flood level but development proponents should ensure that the infrastructure is optimally located and designed to achieve suitable levels of service, having regard to the processes and policies of the administering government agency.

Reference - *State Planning Policy Guideline 1/03: Mitigating the Adverse Impacts of Flood, Bushfire and Landslide.*

this page purposely
left blank

Division 2 - Community Purposes Zone

4.2.1 Introduction

(1) This division contains the provisions for the Community Purposes Zone. They are -

(a) The Community Purposes Zone Tables of Assessment, that incorporates -
- (i) Levels of assessment for development in the Community Purposes Zone (section 4.2.2);
- (ii) Assessment criteria for development in the Community Purposes Zone (section 4.2.3);
- (iii) Community Purposes Zone - Table of Assessment for Material Change of Use of Premises (section 4.2.4);
- (iv) Community Purposes Zone - Table of Assessment for Other Development not associated with a Material Change of Use of Premises (section 4.2.5).

(b) The Community Purposes Zone Code, that incorporates -
- (i) Compliance with the Community Purposes Zone Code (section 4.2.6);
- (ii) Overall Outcomes for the Community Purposes Zone Code (section 4.2.7);
- (iii) Specific Outcomes and Probable Solutions applicable to Assessable Development (section 4.2.8).

4.2.2 Levels of assessment for development in the Community Purposes Zone

(2) Sections 4.2.4 and 4.2.5 identify the level of assessment for development in the Community Purposes Zone, as follows -

(a) section 4.2.4 Community Purposes Zone - Table of Assessment for Making a Material Change of Use of Premises[4.10] -
- (i) column 1 identifies uses that are exempt, self-assessable or assessable;
- (ii) column 2 identifies the level of assessment for the uses listed in column 1;
- (iii) the use is impact assessable where -
  - a. it is defined in Part 9 - Schedule 3 - Dictionary, Division 1 - Uses and is not listed in column 1; or
  - b. it is listed in column 1 and does not comply with the level of assessment qualifications listed in column 2; or
  - c. it is not defined in Part 9 - Schedule 3 - Dictionary, Division 1 - Uses.

(b) section 4.2.5 Community Purposes Zone - Table of Assessment for Other Development not associated with a Material Change of Use of Premises -
- (i) column 1 identifies other development that is exempt, self-assessable or assessable;
- (ii) column 2 identifies the level of assessment for other development listed in column 1;
- (iii) where the other development is not listed in column 1 it is exempt.

(3) Overlays may alter the level of assessment identified in (1)(a) and (b)[4.11].

[4.10] Works associated with an application for a material change of use of premises may be assessed together with the material change of use.

[4.11] Refer to Part 5 - Overlays to determine the level of assessment for the use or other development where an Overlay affects the lot and Part 1, section 1.2.5(10)(f) that explains how the highest level of assessment applies.

4.2.3 Assessment criteria for development in the Community Purposes Zone

(4) Development in the Community Purposes Zone is assessed against the assessment criteria listed in column 3 of sections 4.2.4 and 4.2.5, as follows -

(a) acceptable solutions of applicable codes for self-assessable development; or

(b) applicable codes for code assessable development.

(5) Self-assessable development that does not comply with all the acceptable solutions of the applicable codes is assessable development.

(6) Impact assessable development will be assessed against all relevant provisions of the Redlands Planning Scheme.

Note -

- The level of assessment indicated within section 4.2.4 Community Purposes Zone - Table of Assessment for Material Change of Use of Premises may be affected by Division 2 of the Regulatory Provisions of the *SEQ Regional plan 2005-2026.*
- The level of assessment for reconfiguration as indicated within section 4.2.5 - Community Purposes Zone - Table of Assessment for Other Development not associated with a Material Change of Use of Premises, where within the Regional Landscape and Rural Production Area or Investigation Area of the *SEQ Regional Plan 2005-2026* -
  - complies with Division 3 of the Regulatory Provisions;
  - has a minimum lot size of 100 hectares, unless the subdivision meets an exclusion documented in Division 3

Note -

Summary of Community Purposes Zone Sub-areas	
Sub-area	**Description**
Sub-area CP1	Cemetery
Sub-area CP2	Community Facility
Sub-area CP3	Educational Facility
Sub-area CP4	Emergency Services
Sub-area CP5	Hospital
Sub-area CP6	Place of Worship
Sub-area CP7	Infrastructure
Sub-area CP8	Future Transport/Greenspace/Trail Corridor
Sub-area CP9	Future Island Industry Investigation Area
Sub-area CP10	Future Land Sale/Exchange Investigation Area - Russell Island South
Sub-area CP11	Commonwealth Facilities - Radio Receivers
Sub-area CP12	Future Integrated Transport and Marine Facilities

4.2.4 Community Purposes Zone - Table of Assessment for Material Change of Use of Premises

Community Purposes Zone - Table of Assessment for Material Change of Use of Premises

column 1	column 2	column 3
Use[4.12]	**Level of Assessment**[4.13]	**Assessment Criteria**
Cemetery	Code Assessable If in sub-area CP1 Otherwise - Impact Assessable	■ Community Purposes Zone Code ■ Access and Parking Code ■ Infrastructure Works Code ■ Landscape Code
Child Care Centre	Code Assessable If - (7) In sub-area - (a) CP2; or (b) CP3 Otherwise - Impact Assessable	■ Community Purposes Zone Code ■ Child Care Centre Code ■ Access and Parking Code ■ Development Near Underground Infrastructure Code ■ Erosion Prevention and Sediment Control Code ■ Excavation and Fill Code ■ Infrastructure Works Code ■ Landscape Code ■ Stormwater Management Code
Commercial Office	Code Assessable If in sub-area CP7 where located in a local government depot Otherwise - Impact Assessable	■ Community Purposes Zone Code ■ Access and Parking Code ■ Development Near Underground Infrastructure Code ■ Erosion Prevention and Sediment Control Code ■ Excavation and Fill Code ■ Infrastructure Works Code ■ Landscape Code ■ Stormwater Management Code
Community Facility	Code Assessable If - (1) In sub-area - (a) CP2; or (b) CP3; or (c) CP7 Otherwise - Impact Assessable	■ Community Purposes Zone Code ■ Access and Parking Code ■ Development Near Underground Infrastructure Code ■ Erosion Prevention and Sediment Control Code ■ Excavation and Fill Code ■ Infrastructure Works Code ■ Landscape Code ■ Stormwater Management Code
Education Facility	Code Assessable If in sub-area CP3	■ Community Purposes Zone Code ■ Access and Parking Code ■ Development Near Underground Infrastructure Code ■ Excavation and Fill Code ■ Erosion Prevention and Sediment

[4.12] See Part 9 - Schedule 3 - Dictionary, Division 1 - Uses.
[4.13] See Part 9 - Schedule 3 - Dictionary, Division 2 - Administrative Terms for a definition of level of assessment.

Community Purposes Zone - Table of Assessment for Material Change of Use of Premises

column 1	column 2	column 3
Use[4.12]	**Level of Assessment**[4.13]	**Assessment Criteria**
	Otherwise - Impact Assessable	Control Code ■ Infrastructure Works Code ■ Landscape Code ■ Stormwater Management Code
Emergency Services	Code Assessable If in sub-area CP4 Otherwise - Impact Assessable	■ Community Purposes Zone Code ■ Access and Parking Code ■ Development Near Underground Infrastructure Code ■ Excavation and Fill Code ■ Erosion Prevention and Sediment Control Code ■ Infrastructure Works Code ■ Landscape Code ■ Stormwater Management Code
Health Care Centre	Code Assessable If - (1) In sub-area - (a) CP2; or (b) CP5 Otherwise - Impact Assessable	■ Community Purposes Zone Code ■ Access and Parking Code ■ Development Near Underground Infrastructure Code ■ Erosion Prevention and Sediment Control Code ■ Excavation and Fill Code ■ Infrastructure Works Code ■ Landscape Code ■ Stormwater Management Code
Hospital	Code Assessable If in sub-area CP5 Otherwise - Impact Assessable	■ Community Purposes Zone Code ■ Access and Parking Code ■ Development Near Underground Infrastructure Code ■ Erosion Prevention and Sediment Control Code ■ Excavation and Fill Code ■ Infrastructure Works Code ■ Landscape Code ■ Stormwater Management Code
Indoor Recreation Facility	Code Assessable If - (1) In sub-area CP2; (2) Being undertaken by the local government; (3) On land in the ownership or control of the local government Otherwise - Impact Assessable	■ Community Purposes Zone Code ■ Access and Parking Code ■ Development Near Underground Infrastructure Code ■ Erosion Prevention and Sediment Control Code ■ Excavation and Fill Code ■ Infrastructure Works Code ■ Landscape Code ■ Stormwater Management Code

Community Purposes Zone - Table of Assessment for Material Change of Use of Premises

column 1	column 2	column 3
Use[4.12]	**Level of Assessment**[4.13]	**Assessment Criteria**
Minor Utility	Exempt	
Marine Services	Code Assessable If in sub-area CP12 Otherwise - Impact Assessable	■ Community Purposes Zone Code ■ Access and Parking Code ■ Development Near Underground Infrastructure Code ■ Erosion Prevention and Sediment Control Code ■ Excavation and Fill Code ■ Infrastructure Works Code ■ Landscape Code ■ Stormwater Management Code
Outdoor Recreation Facility	Code Assessable If - (1) In sub-area CP2; (2) Being undertaken by the local government; (3) On land in the ownership or control of the local government; Otherwise - Impact Assessable	■ Community Purposes Zone Code ■ Access and Parking Code ■ Development Near Underground Infrastructure Code ■ Erosion Prevention and Sediment Control Code ■ Excavation and Fill Code ■ Infrastructure Works Code ■ Landscape Code ■ Stormwater Management Code
Passenger Terminal	Code Assessable If in sub-area CP12 Otherwise - Impact Assessable	■ Community Purposes Zone Code ■ Access and Parking Code ■ Development Near Underground Infrastructure Code ■ Erosion Prevention and Sediment Control Code ■ Excavation and Fill Code ■ Infrastructure Works Code ■ Landscape Code ■ Stormwater Management Code
Park	Self-Assessable If - (1) Being undertaken by the local government; (2) On land in the ownership or control of the local government; (3) Complying with the assessment criteria being the acceptable solutions listed in column 3 Code Assessable If not self-assessable	■ Acceptable Solutions in section 6.20.4 of the Park Code ■ Acceptable Solutions of section 8.5.4 of the Development Near Underground Infrastructure Code ■ Community Purposes Zone Code ■ Park Code ■ Access and Parking Code ■ Development Near Underground

Community Purposes Zone

Community Purposes Zone - Table of Assessment for Material Change of Use of Premises

column 1	column 2	column 3
Use[4.12]	**Level of Assessment**[4.13]	**Assessment Criteria**
		Infrastructure Code ■ Infrastructure Works Code ■ Landscape Code ■ Stormwater Management Code
Place of Worship	Code Assessable	■ Community Purposes Zone Code ■ Access and Parking Code ■ Development Near Underground Infrastructure Code ■ Erosion Prevention and Sediment Control Code ■ Excavation and Fill Code ■ Infrastructure Works Code ■ Landscape Code ■ Stormwater Management Code
Road	Exempt	
Shop	Code Assessable If - (1) In sub-areas - (a) CP3; or (b) CP5; (2) 100m^2 or less gross floor area Otherwise - Impact Assessable	■ Community Purposes Zone Code ■ Access and Parking Code ■ Development Near Underground Infrastructure Code ■ Excavation and Fill Code ■ Erosion Prevention and Sediment Control Code ■ Infrastructure Works Code ■ Landscape Code ■ Stormwater Management Code
Telecommunications Facility	Self-Assessable If complying with the assessment criteria being the acceptable solutions listed in column 3 Code Assessable If not self-assessable	■ Acceptable Solutions in section 6.26.4 of the Telecommunications Facility Code ■ Acceptable Solutions in section 8.5.4 of the Development Near Underground Infrastructure Code ■ Acceptable Solutions in section 8.6.4 of the Erosion Prevention and Sediment Control Code ■ Acceptable Solutions A1.(1)(a) and (c) in section 7.6.4 of the Excavation and Fill Code ■ Community Purposes Zone Code ■ Telecommunications Facility Code ■ Access and Parking Code ■ Development Near Underground Infrastructure Code ■ Erosion Prevention and Sediment Control Code ■ Excavation and Fill Code ■ Infrastructure Works Code ■ Landscape Code

Community Purposes Zone - Table of Assessment for Material Change of Use of Premises

column 1	column 2	column 3
Use[4.12]	**Level of Assessment**[4.13]	**Assessment Criteria**
Temporary Use	Self-Assessable If complying with the assessment criteria being the acceptable solutions listed in column 3 Code Assessable If not self-assessable	■ Acceptable Solutions in section 6.27.4 of the Temporary Use Code ■ Community Purposes Zone Code ■ Temporary Use Code
Utility Installation	Code Assessable	■ Community Purposes Zone Code ■ Access and Parking Code ■ Development Near Underground Infrastructure Code ■ Erosion Prevention and Sediment Control Code ■ Excavation and Fill Code ■ Landscape Code ■ Stormwater Management Code
Vehicle Depot	Code Assessable If in sub-area CP7 where located in a local government depot Otherwise - Impact Assessable	■ Community Purposes Zone Code ■ Access and Parking Code ■ Development Near Underground Infrastructure Code ■ Erosion Prevention and Sediment Control Code ■ Excavation and Fill Code ■ Infrastructure Works Code ■ Landscape Code ■ Stormwater Management Code
Vehicle Parking Station	Code Assessable If in sub-area CP12 Otherwise - Impact Assessable	■ Community Purposes Zone Code ■ Access and Parking Code ■ Development Near Underground Infrastructure Code ■ Erosion Prevention and Sediment Control Code ■ Excavation and Fill Code ■ Infrastructure Works Code ■ Landscape Code ■ Stormwater Management Code
Vehicle Repair Premises	Code Assessable If in sub-area CP7 where located in a local government depot Otherwise - Impact Assessable	■ Community Purposes Zone Code ■ Access and Parking Code ■ Development Near Underground Infrastructure Code ■ Erosion Prevention and Sediment Control Code ■ Excavation and Fill Code ■ Infrastructure Works Code ■ Landscape Code ■ Stormwater Management Code

Community Purposes Zone - Table of Assessment for Material Change of Use of Premises

column 1	column 2	column 3
Use[4.12]	**Level of Assessment**[4.13]	**Assessment Criteria**
Warehouse	Code Assessable If in sub-area CP7 where located in a local government depot Otherwise - Impact Assessable	■ Community Purposes Zone Code ■ Access and Parking Code ■ Development Near Underground Infrastructure Code ■ Erosion Prevention and Sediment Control Code ■ Excavation and Fill Code ■ Infrastructure Works Code ■ Landscape Code ■ Stormwater Management Code
Defined uses not listed in column 1	Impact Assessable	
Defined uses listed in column 1 that do not comply with the level of assessment qualifications in column 2	Impact Assessable	
Uses not defined in Part 9 - Schedule 3 - Dictionary, Division 1 - Uses	Impact Assessable	

4.2.5 Community Purposes Zone - Table of Assessment for Other Development not associated with a Material Change of Use of Premises

Community Purposes Zone - Table of Assessment for Other Development

column 1	column 2	column 3
Other Development	**Level of Assessment**[4.14]	**Assessment Criteria**
Reconfiguration for -		
Creating lots by subdividing another lot by Standard Format Plan[4.15]	Code Assessable If - (1) Being undertaken by the local government; (2) On land in the ownership and control of the local government Otherwise - Impact Assessable	■ Community Purposes Zone Code ■ Reconfiguration Code ■ Development Near Underground Infrastructure Code ■ Excavation and Fill Code ■ Infrastructure Works Code ■ Stormwater Management Code
Creating lots by subdividing another lot by - ■ Building Format Plan; or ■ Volumetric Format Plan	Code Assessable If - (1) Being undertaken by the local government; (2) On land in the ownership and control of the local government Otherwise - Impact Assessable	■ Community Purposes Zone Code ■ Reconfiguration Code
■ Rearranging the boundaries of a lot by registering a plan of subdivision; or ■ Dividing land into parts by Agreement; or ■ Creating an easement giving access to a lot from a constructed road	Code Assessable	■ Reconfiguration Code
Building Work for -		
Communications Structures	Exempt If minor building work[4.16] Self-Assessable If - (1) Not exempt; (2) Complying with the assessment criteria being	■ Acceptable Solutions in section 7.2.4 of the Communications Structures Code

[4.14] See Part 9 - Schedule 3 - Dictionary, Division 2 - Administrative Terms for a definition of level of assessment.
[4.15] Whether or not having a Community Management Statement.
[4.16] See Part 9 - Schedule 3 - Dictionary, Division 2 - Administrative Terms for a definition of minor building work.

Community Purposes Zone - Table of Assessment for Other Development

column 1	column 2	column 3
Other Development	**Level of Assessment**[4.14]	**Assessment Criteria**
	the acceptable solutions listed in column 3 Code Assessable If not self-assessable	■ Communications Structures Code
Domestic Additions	Code Assessable	■ Community Purposes Zone Code ■ Domestic Additions Code ■ Development Near Underground Infrastructure Code ■ Erosion Prevention and Sediment Control Code ■ Excavation and Fill Code ■ Stormwater Management Code
Domestic Outbuilding	Code Assessable	■ Community Purposes Zone Code ■ Domestic Outbuilding Code ■ Development Near Underground Infrastructure Code ■ Erosion Prevention and Sediment Control Code ■ Excavation and Fill Code
On-site raising or relocation of an existing dwelling unit	Code Assessable	■ Community Purposes Zone Code ■ On-Site Raising and Relocation Code ■ Development Near Underground Infrastructure Code ■ Erosion Prevention and Sediment Control Code ■ Excavation and Fill Code ■ Infrastructure Works Code ■ Stormwater Management Code
Private Swimming Pool	Code Assessable	■ Community Purposes Zone Code ■ Private Swimming Pool Code ■ Development Near Underground Infrastructure Code ■ Erosion Prevention and Sediment Control Code ■ Excavation and Fill Code
Private Tennis Court	Code Assessable	■ Community Purposes Zone Code ■ Private Tennis Court Code ■ Erosion Prevention and Sediment Control Code ■ Excavation and Fill Code ■ Landscape Code

Community Purposes Zone - Table of Assessment for Other Development

column 1	column 2	column 3
Other Development	**Level of Assessment[4.14]**	**Assessment Criteria**
Operational Work for -		
Constructing a Domestic Driveway Crossover	Self-Assessable If complying with the assessment criteria being the acceptable solutions listed in column 3 Code Assessable If not self-assessable	■ Acceptable Solutions in section 7.4.4 of the Domestic Driveway Crossover Code ■ Domestic Driveway Crossover Code
Excavation and Fill	Exempt If - (1) Disturbing less than 50m^3 of soil; (2) A height/depth not exceeding 300mm measured from ground level Self-Assessable If - (1) Not exempt; (2) Complying with the assessment criteria being the acceptable solutions listed in column 3 Code Assessable If not self-assessable	■ Acceptable Solutions in section 8.6.4 of the Erosion Prevention and Sediment Control Code ■ Acceptable Solutions A1.(1)(b),(c),(d) in section 7.6.4 of the Excavation and Fill Code ■ Erosion Prevention and Sediment Control Code ■ Excavation and Fill Code
Placing an Advertising Device on Premises	Self-Assessable If complying with the assessment criteria being the acceptable solutions listed in column 3 Code Assessable If not self-assessable	■ Acceptable Solutions in section 7.1.4 of the Advertising Devices Code ■ Advertising Devices Code
Operational Work for Reconfiguring a Lot (by Standard Format Plan)	Code Assessable	■ Reconfiguration Code ■ Development Near Underground Infrastructure Code ■ Erosion Prevention and Sediment Control Code ■ Excavation and Fill Code ■ Infrastructure Works Code ■ Landscape Code ■ Stormwater Management Code
Private Waterfront Structures	Code Assessable	■ Private Waterfront Structure Code ■ Development Near Underground Infrastructure Code ■ Erosion Prevention and Sediment Control Code ■ Excavation and Fill Code

Community Purposes Zone - Table of Assessment for Other Development

column 1	column 2	column 3
Other Development	**Level of Assessment[4.14]**	**Assessment Criteria**
All other development not listed in column 1	Exempt	

4.2.6 Compliance with Community Purposes Zone Code

(1) Development that is consistent with the specific outcomes in section 4.2.8 complies with the Community Purposes Zone Code.

Note -

The following planning scheme policy will assist in achieving specific outcomes within the Community Purposes Zone Code -

- Planning Scheme Policy 5 - Environmental Emissions;
- Planning Scheme Policy 9 - Infrastructure Works.

4.2.7 Overall Outcomes for Community Purposes Zone Code

(1) The overall outcomes are the purpose of the Community Purposes Zone Code.

(2) The overall outcomes sought for the Community Purposes Zone Code are described by five key characteristics[4.17] -

(a) Uses and Other Development;
(b) Built Form and Density;
(c) Amenity;
(d) Environment;
(e) Infrastructure.

Each of these is detailed below.

(a) Uses and Other Development

(i) Provide for a specific range of uses that are located on land in public or private ownership and that will meet the needs of the City's existing and future community by -

a. in sub-area CP1 - providing for cemetery, crematorium and associated uses such as a funeral parlour;
b. in sub-area CP2 - providing for community facilities such as halls, child minding and community health centres or the like;
c. in sub-area CP3 - providing for facilities relating to education facilities such as a kindergarten, pre-school, primary or secondary school, TAFE or university or the like;
d. in sub-area CP4 - providing for emergency services;
e. in sub-area CP5 - providing for a hospital and associated services;
f. in sub-area CP6 - providing for a place of worship;
g. in sub-area CP7 - providing for infrastructure, such as wastewater treatment plant, waste disposal facilities, pumping stations, electricity sub-stations, local government depots, roads or the like;
h. in sub-area CP8 - providing for future transport/greenspace/trail corridor;
i. in sub-area CP9 - providing opportunity for future island industry and associated facilities subject to detailed planning investigations adequately addressing the conservation values and other constraints affecting this land
j. in sub-area CP11 - providing for Commonwealth Facilities - Radio Receivers;
k. in sub-area CP12 - providing for future integrated transport and marine facilities subject to detailed planning investigations which adequately address the conservation values and other constraints affecting this land;

(ii) In sub-area CP10 - provide land that is potentially suitable for residential purposes as part of a future targeted land sale/exchange program on the southern end of Russell Island.

(iii) Uses and other development, specifically reconfiguration, do not prejudice the intended use of this zone for its specified community purpose.

[4.17] In combination, the overall outcomes in section 4.2.7(2)(a)-(e) define the character of the Community Purposes Zone.

(b) Built Form and Density

(i) Uses and other development have a site layout that -
a. utilise land efficiently;
b. provide for vehicle access, parking, manouevring and loading/unloading, where required;
c. contribute to security of property and safety of people;
d. minimise environmental impacts and emissions, specifically noise or odour.

(ii) The scale of uses and development is compatible with that of nearby development and positively contribute to the visual amenity of the area by -
a. adopting a building height, width, depth and bulk that minimise visual impacts of built structures, where required;
b. in sub-areas CP1, CP4, CP8, CP10, and CP12 - building height is limited to maintain a low-rise appearance;
c. in sub-areas CP2, CP3, CP6, and CP11 - building height is limited to maintain a mid-rise appearance;
d. in sub-area CP5 - building height does not exceed the maximum height of existing buildings in this sub-area;
e. in sub-area CP8 - limit buildings and structures to that necessary to support the future transport/greenspace/trail corridor;
f. in sub-area CP9 - limit buildings and structures to that defined following investigation of the area for potential island industry uses.

(iii) The density of uses and development is compatible with -
a. uses expected within the specific sub-area;
b. surrounding development.

(iv) Building design facilitates the intended use while being compatible with the predominant built form in the surrounding development.

(v) Buildings incorporate a mix of materials that are responsive to local conditions and styles.

(c) Amenity

(i) Uses and development achieve a high standard of amenity by -
a. ensuring best practice operational standards are implemented;
b. protecting and enhancing of places of cultural significance or streetscape value;
c. providing a landscape setting appropriate to the specific use and that complements surrounding development;
d. maintaining safety of people and property;
e. eliminating or mitigating impacts associated with light, noise, air and traffic.

(d) Environment

(i) Uses and other development minimise adverse impacts on environment and scenic values by -
a. responding to topographical features;
b. minimising the need for excavation and fill;
c. protecting the site from erosion;
d. minimising the need to clear native plants;
e. maximising the use of plant species that are native to the local area;
f. incorporating best practice stormwater management that minimises adverse impacts associated with run-off;
g. enhancing water quality and minimising adverse impacts of potentially water and soil contaminating substances;
h. in sub-area CP7 George Nothling Drive, Point Lookout - the land is not released until an environmental impact statement is undertaken.

(e) Infrastructure

(i) Uses and other development -
a. maximise use of existing infrastructure;
b. provide for the extension of infrastructure in an orderly and cost effective manner;
c. do not result in unacceptable risk to community infrastructure;

(ii) Manage the generation, storage and disposal of waste, commensurate with the specific activities of the use or other development.

(iii) Uses and other development are serviced by infrastructure necessary to serve the specific use, and maintain health and environmental standards, including, as applicable -
a. reticulated water;
b. reticulated sewerage; or
c. where the site is not able to be connected to a reticulated sewerage system, wastewater is treated and disposed of on-site subject to site, soil and locational constraints;
d. stormwater drainage;
e. constructed road access;
f. energy;
g. telecommunications.

(iv) Uses and other development support an integrated, legible, efficient and safe movement network that -
a. facilitate a range of movement modes including public transport, passenger vehicles, walking and cycling;
b. provide for pedestrian, cycle and vehicle movement networks that maximise connectivity, permeability and ease of mobility;
c. maximise opportunities for the provision of pedestrian and cycle paths.

Note -

Summary of Community Purposes Zone Sub-areas	
Sub-area	**Description**
Sub-area CP1	Cemetery
Sub-area CP2	Community Facility
Sub-area CP3	Educational Facility
Sub-area CP4	Emergency Services
Sub-area CP5	Hospital
Sub-area CP6	Place of Worship
Sub-area CP7	Infrastructure
Sub-area CP8	Future Transport/Greenspace/Trail Corridor
Sub-area CP9	Future Island Industry Investigation Area
Sub-area CP10	Future Land Sale/Exchange Investigation Area - Russell Island South
Sub-area CP11	Commonwealth Facilities - Radio Receivers
Sub-area CP12	Future Integrated Transport and Marine Facilities

4.2.8 Specific Outcomes and Probable Solutions applicable to Assessable Development

Assessable Development			
Specific Outcomes		**Probable Solutions**	
	Uses and Other Development -		
S1.1	Uses identified as inconsistent in Table 1 are not established in the zone.	**P1.1**	No probable solution identified.
S1.2	(1) Uses serve the community by providing a range of facilities and services, and are limited to those expected in specific sub-areas including - (a) CP1 - Cemetery and ancillary facilities; (b) CP2 - Community facilities such as cultural, social or community based uses including halls, child care, health care or the like; (c) CP3 - Educational facilities including schools, colleges, universities, academies or the like and ancillary facilities such as residential accommodation; (d) CP4 - Emergency facilities such as police, ambulance, fire stations or the like; (e) CP5 - Hospitals and ancillary facilities; (f) CP6 - Place of Worship including church, mosque, temple, synagogue or the like and ancillary facilities; (g) CP7 - Infrastructure including wastewater treatment plant, waste disposal facility, pump station, electricity sub-station, local government depot, roads or the like; (h) CP8 - Future Transport/Greenspace/Trail Corridor that may include roads, pedestrian and cycle paths and associated facilities, such as public transport infrastructure, open space and the like; (i) CP9 - being land that is potentially suitable for future island industry purposes subject to the conservation values and other constraints affecting the land being adequately addressed; (j) CP10 - being land on the southern end of Russell Island that may be suitable	**P1.2**	(1) No probable solution identified.

Assessable Development			
Specific Outcomes		**Probable Solutions**	
	for residential purposes as part of a future targeted land sale/exchange program; (k) CP11 - Commonwealth Facilities - Radio Receivers; (l) CP12 - future integrated transport and marine facilities and ancillary facilities such as commercial office, refreshment establishment, open space and the like.		
S1.3	Reconfiguration does not prejudice the intended use of this zone for its specified community purpose.	**P1.3**	No probable solution identified.
	Built Form and Density -		
S2.1	(1) Site layout - (a) uses the site efficiency and allocates sufficient areas for all activities related to the use; (b) provides for vehicle access to the use, that does not adversely affect the function of the road from which the use is accessed; (c) locates parking at visible locations that have easy and direct pedestrian access to buildings or outdoor areas associated with the use; (d) provides sufficient areas for servicing, manouevring and loading/unloading as applicable to the specific use; (e) is designed to maximise personal safety of employees, users and visitors to the site; (f) for CP7 - Infrastructure - where in proximity to existing residential or other sensitive uses, ensures all measures are taken to minimise adverse impacts associated with noise, odour and other negative environmental emissions.	**P2.1**	(1) No probable solution identified.
S2.2	(1) Building height - (a) respects the existing streetscape and adopts the predominant building height of nearby development; (b) where required due to the specific nature of the use to have a higher building height than the predominant building	**P2.2**	(1) Building height is limited to - (a) 8.5 metres or less above ground level in sub-areas CP1, CP4, CP8 and CP10; (b) 12 metres or less above ground level in sub-areas CP2, CP3, CP6, CP7 and CP11; (c) the height of existing buildings in sub-area CP5;

Community Purposes Zone

Assessable Development			
Specific Outcomes		**Probable Solutions**	
	heights of nearby development, all necessary measures are taken to mitigate the impact of overshadowing, loss of privacy or the like; (c) in sub-area CP12 - building height adopts a low-rise built form that ensures a high quality appearance and does not dominate the landscape when viewed from public places or Moreton Bay; (d) in sub-area CP9 - limits building and structure height to that defined following investigation of the area for potential island industry uses.		(d) 10.5 metres or less above ground level in sub-area CP12.
S2.3	(1) Site coverage of buildings and other hard surface areas balance built and un-built areas to - (a) assist in retaining existing native plants; (b) provide space for on-site landscaping and planting; (c) provide areas for access, parking, manouevring, servicing areas and any outdoor areas associated with the use; (d) facilitate stormwater management.	**P2.3**	(1) No probable solution identified.
S2.4	(1) Setbacks - (a) allow for the safe and efficient use of the site; (b) allow for planted landscaping along street frontages; (c) provide employee, user and visitor parking at visible locations that have easy and direct pedestrian access to building entries and outdoor areas associated with the use; (d) contribute to the building form and provide an attractive streetscape; (e) enable the effective location of overland flow paths and utility infrastructure; (f) minimise visual impacts on key scenic sightlines; (g) are increased where required to provide for overland flow paths associated with stormwater management, other infrastructure and car parking.	**P2.4**	(1) No probable solution identified.

Assessable Development			
Specific Outcomes		**Probable Solutions**	
S2.5	(1) Where the use requires buildings that are visible from public locations and are accessed by the public on a regular basis, they are designed to incorporate architectural elements that - (a) exhibit a high degree of interest through the use of colour, angles, materials and shadows; (b) integrate with landscape planting and prevailing landscape features; (c) maintain human scale; (d) promote an attractive and vibrant streetscape where applicable; (e) provide interesting, functional and attractive facades that contribute to the streetscape setting and pedestrian experience; (f) minimise any adverse overshadowing and reflective impacts; (g) provide physical connections and linkages between buildings, and between buildings and public spaces, including public parks to encourage pedestrian movement; (h) are articulated to minimise appearance of building bulk and size.	**P2.5**	No probable solution identified.
	Amenity -		
S3.1	Development does not adversely impact on the cultural heritage values of a registered heritage place(s) or character precinct.	**P3.1**	No probable solution identified.
S3.2	(1) High quality landscaping including planting and other components of the landscape are provided that - (a) have regard to the proximity and location of the use to the street; (b) are of a suitable scale relative to the scale of any buildings associated with the use; (c) have regard to the need for any intensive screen planting where adjoining a sensitive environment; (d) are used to break up the visual bulk of buildings;	**P3.**	(1) No probable solution identified.

Community Purposes Zone

Assessable Development			
Specific Outcomes		**Probable Solutions**	
	(e) are sensitive to site attributes and the surrounding natural environment; (f) create visual relief and shade, particularly within car parking areas; (g) are used to screen outdoor storage, work and service or other obtrusive areas from public view; (h) are used to define building entrances and pedestrian paths.		
S3.3	(1) Signage clutter is minimised, especially to the external streetscape; (2) Where appropriate - (a) communal signage is provided, preferably in the form of an architectural and landscaped feature; (b) directional signage assists users in navigating the site.	**P3.3**	(1) No probable solution identified; (2) No probable solution identified. **Note -** Refer to Part 7 - Division 1 - Advertising Devices Code for signage assessment criteria.
S3.4	(1) Where incorporating aged persons and special needs housing or associated residential accommodation - building layout and design maximise privacy (visual and acoustic) through - (a) locating habitable rooms so they do not directly overlook habitable rooms of adjacent uses, either within or adjoining the use; (b) separating noise generating areas from sleeping areas where appropriate.	**P3.4**	(1) No probable solution identified.
S3.5	(1) Where incorporating aged persons and special needs housing or associated residential accommodation, private and communal open space areas are - (a) clearly defined for their specific use; (b) easily accessible from living or common areas; (c) of a useable size and dimension; (d) of a suitable slope; (e) capable of receiving solar access.	**P3.5**	(1) No probable solution identified. **Note -** Refer to the relevant use code for specific communal or private open space assessment criteria.
S3.6	(1) Areas set aside for public open space - (a) provide for recreational, aesthetic and environmental	**P3.6**	(1) No probable solution identified. **Note -**

Assessable Development			
Specific Outcomes		**Probable Solutions**	
	needs; (b) incorporate stormwater management needs, while not hindering the function of the open space.		For additional assessment criteria for public open space refer to - ■ Part 6 - Division 20 - Park Code; ■ Part 7 - Division 11 - Reconfiguration Code.
S3.7	(1) Building design maximises use of the principles of Crime Prevention through Environmental Design (CPTED) to assist in crime prevention by - (a) being orientated towards the street or other active areas; (b) being well lit; (c) providing opportunities for casual surveillance of pedestrian and cycle paths, open space areas, the street and car parking areas.	**P3.7**	(1) No probable solution identified.
S3.8	(1) Noise and vibration emissions generated by the operational activities of the use are minimised by - (a) acoustically housing noise emitting plant and equipment; (b) locating, away from sensitive environments - (i) major opening in buildings; (ii) outdoor work areas.	**P3.8**	(1) Noise generated by the use complies with - (a) Table 2 - Noise levels at the boundary of the Community Purposes Zone; (b) Table 3 - Noise levels at the boundary of the nearest residential zone; or (c) the requirements of any development approval issued under the *Environmental Protection Act 1994*.
S3.9	(1) Uses and other development minimise emissions of dust and odour and the generation of airborne pollutants; (2) Dust impacts of vehicle movements and stockpiling of materials are eliminated or mitigated.	**P3.9**	(1) Emissions of dust or odour and the generation of airborne pollutants do not exceed the relevant guidelines set out in Schedule 1 of the *Environmental Protection (Air) Policy 1997*; (2) No probable solution identified.
S3.10	(1) Artificial lighting does not result in unreasonable disturbance to any person or activity; (2) Glare and reflection from the sun are minimised through material and glazing choice.	**P3.10**	(1) The vertical illumination resulting from direct, reflected or other incidental light emanating from the site does not exceed 8 lux when measured at any point 1.5 metres outside the boundary at or above ground level; (2) No probable solution identified.
S3.11	(1) Land contamination is minimised by - (a) ensuring storage, use and spillage of potential contaminants do not result in the contamination of land; (b) incorporating waste storage and collection measures that protect against spillage of	**P3.11**	(1) No probable solution identified. **Note -** Refer to Part 11 - Planning Scheme Policy 5 - Environmental Emissions for further information on noise and air quality impacts.

Community Purposes Zone

Assessable Development			
Specific Outcomes		**Probable Solutions**	
	contaminated materials; (c) ensuring storage areas for potentially contaminating substances are roofed and located on impermeable surfaces; (d) incorporating space for accidental spill areas to be bunded and the contaminant retained on-site in an impermeable area/system, before removal by an approved means.		
S3.12	(1) Emissions of contaminants including heat, radioactivity, electromagnetic radiation or the like do not cause adverse environmental impacts; (2) The use or other development does not involve radioactive or bio-hazardous - (i) materials; (ii) processes.	**P3.12**	(1) No probable solution identified; (2) No probable solution identified.
S3.13	(1) Eliminate risk to people, property and the environment from hazards including, fire, explosion and chemical release.	**P3.13**	(1) The use is not defined in the *Dangerous Goods Safety Management Regulation 2001* as - (a) Dangerous Goods Location or Large Dangerous Goods Location; (b) Major Hazardous Facility. **Note -** Refer to Schedule 1 and 2 of the *Dangerous Goods Safety Management Regulation 2001.*
	Environment -		
S4.1	(1) Protect the environment from impacts associated with the use or other development including - (a) stormwater run-off; (b) erosion and sediment run-off; (c) water quality; (d) weed infestation.	**P4.1**	(1) No probable solution identified.
S4.2	(1) Minimise the need for excavation and fill by uses and other development being located and designed to - (a) prevent the unnecessary removal of native plants; (b) protect overland drainage flows; (c) protect the amenity of adjoining properties;	**P4.2**	(1) No probable solution identified. **Note -** Refer to Part 7 - Division 6 - Excavation and Fill for specific assessment criteria.

Assessable Development			
Specific Outcomes		**Probable Solutions**	
	(d) reduce erosion and sediment run-off.		
S4.3	(1) Uses and other development, including infrastructure provision, maximise the retention of native plants; (2) Where new public roads are required opportunities are taken to retain mature native plants within the road reserve.	**P4.3**	(1) No probable solution identified; (2) No probable solution identified.
S4.4	(1) Landscaping - (a) incorporates plant species that are native to the local area; (b) recognises and enhances the landscape character of the local area; (c) supports the retention and rehabilitation of enhancement areas and corridors; (d) maximises the use of permeable surfaces to improve the quality and reduce the quantity of stormwater run-off; (e) incorporates landscaping as a component of the stormwater management system.	**P4.4**	(1) Species used for landscaping are selected from the native species listed in Part 9 - (a) Schedule 10 - Vegetation Species List; (b) Schedule 9 - Street Trees where within the road reserve. **Note -** For additional assessment criteria refer to Part 8 - ■ Division 8 - Landscape Code; ■ Division 9 - Stormwater Management Code.
S4.5	(1) Fences and non-building walls - (a) are visually attractive and contribute to or blend with planted landscaping and building materials; (b) are designed and detailed to provide visual interest to the streetscape; (c) provide an effective visual and acoustic screen to adjoining sensitive environments; (d) assist in highlighting entrances and pedestrian paths; (e) maximise safety and security; (f) do not inhibit the movement of native fauna between habitats and through movement corridors.	**P4.5**	(1) Fences and non building walls **-** (a) on the property boundary to any street frontage are not greater than 1.2 metres high; (b) at the front and side, where greater than 1.2 metres in height are - (i) erected behind the front building line rather than the property boundary of any street frontage; (ii) screened by landscaping; (c) on rear boundaries are chain wire rather than solid and a colour that blends with the surrounding built, planted or natural environment; (d) which are an extension of retaining walls or earth batters are landscaped or planted; (e) where having a common boundary with a sensitive receiving environment, are 2 metres high, solid and incorporate planted landscaping to screen views and mitigate noise impacts; (f) are easily traversed by a range

Community Purposes Zone

Assessable Development			
Specific Outcomes		**Probable Solutions**	
			of native animals; (g) are constructed from materials that complement the environmental values and landscape setting of the location.
	Infrastructure -		
S5.1	(1) Uses and other development are serviced by infrastructure, as appropriate to the use, including - (a) reticulated water; (b) reticulated sewerage; or (c) where the site is not able to be connected to a reticulated sewerage system, wastewater is treated and disposed of on-site subject to site, soil and locational constraints; (d) constructed road access; (e) energy; (f) telecommunications.	**P5.1**	(1) No probable solution identified. **Note -** ■ Roads are designed and constructed in accordance with Part 9 - Schedule 6 - Movement Network and Road Design; ■ Refer to Part 11 - Planning Scheme Policy 9 - Infrastructure Works.
S5.2	(1) Stormwater management for the site - (a) enhances water quality at receiving waters; (b) protects waterways from potential contamination; (c) effectively provide for overland drainage flows.	**P5.2**	(1) Stormwater management for the site ensures that the quality of stormwater leaving the lot or premises achieves the standards detailed in Part 9 - Schedule 11 - Water Quality Objectives. **Note -** Refer to Part 8 - Division 9 - Stormwater Management Code for stormwater management assessment criteria.
S5.3	(1) Uses and other development maximise the safe, convenient and comfortable movement of public transport passengers, pedestrians and cyclists by providing - (a) links to public transport routes; (b) pedestrian and cycle paths; (c) pathways, building entrances, amenities and seating that support accessibility for people with special needs.	**P5.3**	(1) No probable solution identified. **Note -** For further assessment criteria related to access and internal movement refer to Part 8 - ■ Division 1 - Access and parking Code; ■ Division 7 - Infrastructure Works Code.
S5.4	(1) Opportunities for cycling as a modal choice for employees, users and visitors are provided through - (a) clearly defined on-site cycle paths and facilities; (b) secure cycle storage areas	**P5.4**	(1) Cycling facilities include - (a) on-site bicycle facilities that are designed and constructed in accordance with *AUSTROAD's Traffic Engineering Practice*, Part 14 - Bicycles;

Assessable Development			
Specific Outcomes		**Probable Solutions**	
	and facilities; (c) provision of cycle racks.		(b) the following for employees - (i) 1 bicycle space per 350m^2 of gross floor area; (ii) 1 personal locker per 2 bicycle parking spaces; (iii) 1 shower cubicle with ancillary changing area per 5 bicycle spaces; or (iv) 1 shower cubicle with ancillary changing area if less than 5 bicycle spaces are required; (c) the following for visitors and users - 1 bicycle space per 350m^2 of gross floor area, up to a maximum of 10 spaces.
S5.5	(1) The design and layout of vehicle access and parking facilities are - (a) located to minimise disruption to traffic flow, promote efficiency and public transport priority and minimise impact on adjoining areas; (b) located and designed to minimise conflicts between pedestrians and cyclists with vehicles; (c) located to maintain a high quality built form and streetscape from along all road frontages.	**P5.5**	(1) No probable solution identified.
S5.6	(1) Waste and recycling is managed to minimise impacts on the environment and nearby premises by - locating waste and recycling storage areas to protect amenity and to provide safe manual handling of containers; screening waste and recycling container storage areas from view; providing for the cleansing of containers in a manner that does not cause adverse environmental impacts; (2) Uses and other development - (a) provide safe and efficient manoeuvring for waste collection vehicles; (b) ensure all bulk waste and recycling containers are serviced off-street and not on roads with public access; (c) ensure sufficient vertical clearance for container	**P5.6**	(1) No probable solution identified. (2) No probable solution identified. (3) No probable solution identified. **Note -** Refer to Part 11 - Planning Scheme Policy 9 - Infrastructure Works – Chapter 16 – Waste Management for further information on waste and recycling container volume, storage, servicing, screening and cleansing. Refer to Part 8 - Division 1 - Access and Parking Code for waste collection vehicle servicing and manoeuvring assessment criteria.

Assessable Development			
Specific Outcomes		**Probable Solutions**	
	servicing; (d) ensure unobstructed access to containers by collection vehicles; (3) Waste and recycling storage is designed and located to - (a) provide adequate container volume to contain the waste and recyclables; (b) provide recycle containers in an equivalent or greater volume to waste containers; (c) provide a dedicated waste and recycling container storage area that is convenient and safe to use; (d) ensure containers are located on impermeable surfaces.		
S5.7	Community infrastructure is able to function effectively during and immediately after flood events.	**P5.7**	Community infrastructure is located at or above the recommended flood levels in Table 4 - Recommended Flood Levels for Community Infrastructure.

Table 1 - Inconsistent Uses

Inconsistent Uses
Airport
Aged Persons and Special Needs Housing - except in sub-area CP2 and sub-area CP5
Agriculture
Animal Keeping
Apartment Building
Bed and Breakfast
Brothel
Bulky Goods Showroom
Car Wash Facility
Cemetery - except in sub-area CP1
Child Care Centre - except in sub-area CP2, sub-area CP3 and sub-area CP5
Commercial Office - except in sub-area CP7 and sub-area CP12
Display and Sale Activity
Display Dwelling
Drive Through Restaurant
Dual Occupancy
Dwelling House - except in sub-area CP10
Education Facility - except in sub-area CP3, sub-area CP6 and sub-area CP11
Estate Sales Office
Extractive Industry
Forestry
Funeral Parlour - except in sub-area CP1
Garden Centre
General Industry - except in sub-area CP9
Health Care Centre - except in sub-area CP2 and sub-area CP5
Heavy Industry
High Impact Industry
Home Business
Hospital - except in sub-area CP5 and sub-area CP11
Hotel
Indoor Recreation Facility - except in sub-area CP2 and sub-area CP11
Institution
Intensive Agriculture

Landscape Supply Depot
Marine Services - except in sub-area CP12
Mobile Home Park
Multiple Dwelling
Night Club
Outdoor Recreation Facility - except in sub-area CP2 and sub-area CP11
Passenger Terminal - except in sub-area CP12
Produce Store
Refreshment Establishment - except in sub-area CP12
Relatives Apartment
Retail Warehouse
Roadside Stall
Rural Enterprise
Service Industry
Service Station
Shop - except in sub-area CP3, sub-area CP5 and sub-area CP12
Small Lot House
Tourist Accommodation
Tourist Park
Vehicle Depot - except in sub-area CP4 and sub-area CP7
Vehicle Parking Station - except in sub-area CP12
Vehicle Repair Premises - except in sub-area CP7
Veterinary Surgery
Warehouse - except in sub-area CP7

Table 2 - Noise levels at the boundary of the Community Purposes Zone

Period	Noise level at the boundary of the Community Purposes Zone [1]
7am - 10pm	Background noise level plus 10 dB(A)
10pm - 7am	Background noise level plus 8 dB(A)

Note [1] - Measured as the adjusted maximum sound pressure level $L_{Amax,adj,T}$ as defined in the *Noise Measurement Manual* (Environmental Protection Agency, 2000).

Table 3 - Noise levels at the boundary of the nearest residential zone

Period	Noise level at the boundary of the nearest residential zone [1]
7am - 10pm	Background noise level plus 5 dB(A)
10pm - 7am	Background noise level plus 3 dB(A)

Note [1] - Measured as the adjusted maximum sound pressure level $L_{Amax,adj,T}$ as defined in the *Noise Measurement Manual* (Environmental Protection Agency, 2000).

Table 4 - Recommended Flood Levels for Community Infrastructure

Type of Community Infrastructure	Recommended Flood Level AEP (ARI)
Emergency services, other than police facilities	0.2% (1 in 500 year ARI)
Emergency shelters	0.5% (1 in 500 year ARI)
Police facilities	0.5% (1 in 500 year ARI)
Hospitals and associated facilities	0.2% (1 in 500 year ARI)
Stores of valuable records or items of historic or cultural significance such as galleries and libraries	0.5% (1 in 500 year ARI)
Power stations	0.2% (1 in 500 year ARI)
Major switch yards	0.2% (1 in 500 year ARI)
Substations	0.5% (1 in 200 year ARI)
Sewerage treatment plants	1% (1 in 100 year ARI)
Water treatment plants	0.5% (1 in 200 year ARI)
■ State-controlled roads ■ Works of an electricity entity not otherwise listed in this table ■ Railway lines, stations and associated facilities ■ Aviation facilities ■ Communication network facilities	No specific recommended flood level but development proponents should ensure that the infrastructure is optimally located and designed to achieve suitable levels of service, having regard to the processes and policies of the administering government agency.

Reference - *State Planning Policy Guideline 1/03: Mitigating the Adverse Impacts of Flood, Bushfire and Landslide.*

Division 3 - Conservation Zone

4.3.1 Introduction

(1) This division contains the provisions for the Conservation Zone. They are -

(a) The Conservation Zone Tables of Assessment, that incorporates -
(i) Levels of assessment for development in the Conservation Zone (section 4.3.2);
(ii) Assessment criteria for development in the Conservation Zone (section 4.3.3);
(iii) Conservation Zone - Table of Assessment for Material Change of Use of Premises (section 4.3.4);
(iv) Conservation Zone - Table of Assessment for Other Development not associated with a Material Change of Use of Premises (section 4.3.5).

(b) The Conservation Zone Code, that incorporates -
(i) Compliance with the Conservation Zone Code (section 4.3.6);
(ii) Overall Outcomes for the Conservation Zone Code (section 4.3.7);
(iii) Specific Outcomes and Probable Solutions applicable to Assessable Development (section 4.3.8).

4.3.2 Levels of assessment for development in the Conservation Zone

(1) Sections 4.3.4 and 4.3.5 identify the level of assessment for development in the Conservation Zone, as follows -

(a) section 4.3.4 Conservation Zone - Table of Assessment for Making a Material Change of Use of Premises[4.18] -
(i) column 1 identifies uses that are exempt, self-assessable or assessable;
(ii) column 2 identifies the level of assessment for the uses listed in column 1;
(iii) the use is impact assessable where -
a. it is defined in Part 9 - Schedule 3 - Dictionary, Division 1 - Uses and is not listed in column 1; or
b. it is listed in column 1 and does not comply with the level of assessment qualifications listed in column 2; or
c. it is not defined in Part 9 - Schedule 3 - Dictionary, Division 1 - Uses.

(b) section 4.3.5 Conservation Zone - Table of Assessment for Other Development not associated with a Material Change of Use of Premises -
(i) column 1 identifies other development that is exempt, self-assessable or assessable;
(ii) column 2 identifies the level of assessment for other development listed in column 1;
(iii) where the other development is not listed in column 1 it is exempt.

(2) Overlays may alter the level of assessment identified in (1)(a) and (b)[4.19].

[4.18] Works associated with an application for a material change of use of premises may be assessed together with the material change of use.
[4.19] Refer to Part 5 - Overlays to determine the level of assessment for the use or other development where an Overlay affects the lot and Part 1, section 1.2.5(10)(f) that explains how the highest level of assessment applies.

4.3.3 Assessment criteria for development in the Conservation Zone

(1) Development in the Conservation Zone is assessed against the assessment criteria listed in column 3 of sections 4.3.4 and 4.3.5, as follows -

(a) acceptable solutions of applicable codes for self-assessable development; or

(b) applicable codes for code assessable development.

(2) Self-assessable development that does not comply with all the acceptable solutions of the applicable codes is assessable development. Non compliance with only the acceptable solutions for self-assessable development in relation to setbacks and site cover under the QDC or nominated "Alternative Provisions" or Building Assessment Provisions will not elevate the level of assessment of a proposal from self assessable development to assessable development under the Redlands Planning Scheme. In these instances, the local government will undertake the functions of a referral agency with Concurrence Agency jurisdiction under IPA to assess and determine these matters.

(3) Impact assessable development will be assessed against all relevant provisions of the Redlands Planning Scheme.

Note –

- The level of assessment indicated within section 4.3.4 - Conservation Zone - Table of Assessment for Material Change of Use of Premises may be affected by Division 2 of the Regulatory Provisions of the *SEQ Regional Plan 2005-2026.*
- The level of assessment for reconfiguration as indicated within section 4.3.5 - Conservation Zone - Table of Assessment for Other Development not associated with a Material Change of Use of Premises, where within the Regional Landscape and rural Production Area or Investigation Area of the *SEQ Regional Plan 2005-2026* -
  - complies with Division 3 of the Regulatory Provisions;
  - has a minimum lot size of 100 hectares, unless the subdivision meets an exclusion documented in Division 3.

Note -

Summary of Conservation Zone sub-areas	
Sub-area	**Description**
Sub-area CN1	Environmental and Drainage Constrained Land
Sub-area CN2	Nature Based Recreation

4.3.4 Conservation Zone - Table of Assessment for Material Change of Use of Premises

Conservation Zone - Table of Assessment for Material Change of Use of Premises

column 1	column 2	column 3
Use[4.20]	**Level of Assessment**[4.21]	**Assessment Criteria**
Bed and Breakfast	Code Assessable If - (1) Not in sub-area - (a) CN1; or (b) CN2 Otherwise - Impact Assessable	■ Conservation Zone Code ■ Bed and Breakfast Code ■ Infrastructure Works Code ■ Landscape Code
Dwelling House	Code Assessable If - (1) Not in sub-area - (a) CN1; or (b) CN2 Otherwise - Impact Assessable	■ Conservation Zone Code ■ Dwelling House Code ■ Development Near Underground Infrastructure Code ■ Domestic Driveway Crossover Code ■ Erosion Prevention and Sediment Control Code ■ Excavation and Fill Code ■ Infrastructure Works Code ■ Stormwater Management Code
Home Business	Self-Assessable If - (1) Not in sub-area - (a) CN1; or (b) CN2; (2) Complying with the assessment criteria being the acceptable solutions listed in column 3 Code Assessable If - (1) Not self-assessable; (2) Not in sub-area - (a) CN1; or (b) CN2 Otherwise - Impact Assessable	■ Acceptable Solutions in section 6.15.4 of the Home Business Code ■ Conservation Zone Code ■ Home Business Code ■ Access and Parking Code And where being carried out in a Domestic Outbuilding - ■ Domestic Outbuilding Code ■ Development Near Underground Infrastructure Code ■ Erosion Prevention and Sediment Control Code ■ Excavation and Fill Code

[4.20] See Part 9 - Schedule 3 - Dictionary, Division 1 - Uses.
[4.21] See Part 9 - Schedule 3 - Dictionary, Division 2 - Administrative Terms for a definition of level of assessment.

Conservation Zone - Table of Assessment for Material Change of Use of Premises

column 1	column 2	column 3
Use[4.20]	**Level of Assessment**[4.21]	**Assessment Criteria**
Minor Utility	Exempt	
Park	Self-Assessable If - (1) Being undertaken by the local government; (2) On land in the ownership or control of the local government; (3) In sub-area CN2; (4) Complying with the assessment criteria being the acceptable solutions listed in column 3 Code Assessable If - (1) Not self-assessable; (2) Not in sub-area CN1 Otherwise - Impact Assessable	■ Acceptable Solutions in section 6.20.4 of the Park Code ■ Acceptable Solutions in section 8.5.4 of the Development Near Underground Infrastructure Code ■ Conservation Zone Code ■ Park Code ■ Access and Parking Code ■ Development Near Underground Infrastructure Code ■ Infrastructure Works Code ■ Landscape Code ■ Stormwater Management Code
Relatives Apartment	Self-Assessable If - (1) Not in sub-area - (a) CN1; or (b) CN2; (2) Complying with the assessment criteria being the acceptable solutions listed in column 3 Code Assessable If - (1) Not self-assessable; (2) Not in sub-area - (a) CN1; or (b) CN2 Otherwise - Impact Assessable	■ Acceptable Solutions in section 6.21.4 of Relatives Apartment Code ■ Acceptable Solutions in section 8.5.4 of the Development Near Underground Infrastructure Code ■ Acceptable Solutions in section 8.6.4 of the Erosion Prevention and Sediment Control Code ■ Acceptable Solutions A1.(1)(a) and (c) in section 7.6.4 of the Excavation and Fill Code ■ Conservation Zone Code ■ Relatives Apartment Code ■ Development Near Underground Infrastructure Code ■ Erosion Prevention and Sediment Control Code ■ Excavation and Fill Code ■ Stormwater Management Code

Conservation Zone - Table of Assessment for Material Change of Use of Premises

column 1	column 2	column 3
Use[4.20]	**Level of Assessment**[4.21]	**Assessment Criteria**
Road	Exempt	
Roadside Stall	Code Assessable If - (1) Not in sub-area - (a) CN1; or (b) CN2 Otherwise - Impact Assessable	■ Conservation Zone Code ■ Roadside Stall Code ■ Access and Parking Code ■ Development Near Underground Infrastructure Code ■ Infrastructure Works Code
Telecommunications Facility	Self-Assessable[4.22] If complying with the assessment criteria being the acceptable solutions listed in column 3 Otherwise - Impact Assessable	■ Acceptable Solutions in section 6.26.4 of the Telecommunications Facility Code ■ Acceptable Solutions in section 8.5.4 of the Development Near Underground Infrastructure Code ■ Acceptable Solutions in section 8.6.4 of the Erosion Prevention and Sediment Control Code ■ Acceptable Solutions A1.(1)(a) and (c) in section 7.6.4 of the Excavation and Fill Code
Temporary Use	Self-Assessable If - (1) Not in sub-area CN1; (2) Complying with the assessment criteria being the acceptable solutions listed in column 3 Code Assessable If - (1) Not self-assessable; (2) Not in sub-area CN1 Otherwise - Impact Assessable	■ Acceptable Solutions in section 6.27.4 of the Temporary Use Code ■ Conservation Zone Code ■ Temporary Use Code
Utility Installation	Code Assessable If - (1) Not in sub-area - (a) CN1; or (b) CN2	■ Conservation Zone Code ■ Access and Parking Code ■ Development Near Underground Infrastructure Code ■ Erosion Prevention and Sediment Control Code ■ Excavation and Fill Code ■ Landscape Code

[4.22] If not self-assessable a Telecommunication Facility in the Conservation Zone is impact assessable.

Conservation Zone - Table of Assessment for Material Change of Use of Premises

column 1	column 2	column 3
Use[4.20]	**Level of Assessment**[4.21]	**Assessment Criteria**
	Otherwise - Impact Assessable	■ Stormwater Management Code
Defined uses not listed in column 1	Impact Assessable	
Defined uses listed in column 1 that do not comply with the level of assessment qualifications in column 2	Impact Assessable	
Uses not defined in Part 9 - Schedule 3 - Dictionary, Division 1 - Uses	Impact Assessable	

Conservation Zone

4.3.5 Conservation Zone - Table of Assessment for Other Development not associated with a Material Change of Use of Premises

Conservation Zone - Table of Assessment for Other Development

column 1	column 2	column 3
Other Development	**Level of Assessment**[4.23]	**Assessment Criteria**
Reconfiguration for -		
Creating lots by subdividing another lot by Standard Format Plan[4.24]	Code Assessable If - (1) Not in sub-area - (a) CN1; or (b) CN2 Otherwise - Impact Assessable	■ Conservation Zone Code ■ Reconfiguration Code ■ Development Near Underground Infrastructure Code ■ Excavation and Fill Code ■ Infrastructure Works Code ■ Stormwater Management Code
Creating lots by subdividing another lot by - ■ Building Format Plan; or ■ Volumetric Format Plan	Code Assessable	■ Conservation Zone Code ■ Reconfiguration Code
■ Rearranging the boundaries of a lot by registering a plan of subdivision; or ■ Dividing land into parts by Agreement; or ■ Creating an easement giving access to a lot from a constructed road	Code Assessable	■ Reconfiguration Code
Building Work for -		
Communications Structures	Exempt If minor building work[4.25] Self-Assessable If - (1) Not exempt; (2) Complying with the assessment criteria being the acceptable solutions listed in column 3 Code Assessable If not self-assessable	■ Acceptable Solutions in section 7.2.4 of the Communications Structures Code ■ Communications Structures Code

[4.23] See Part 9 - Schedule 3 - Dictionary, Division 2 - Administrative Terms for a definition of level of assessment.
[4.24] Whether or not having a Community Management Statement.
[4.25] See Part 9 - Schedule 3 - Dictionary, Division 2 - Administrative Terms for a definition of minor building work

Conservation Zone - Table of Assessment for Other Development

column 1	column 2	column 3
Other Development	**Level of Assessment**[4.23]	**Assessment Criteria**
Domestic Additions	Exempt If minor building work[4.25] Self-Assessable If - (1) Not exempt; (2) Not in sub-area CN1; (3) Complying with the assessment criteria being the acceptable solutions listed in column 3 **Note -** Non-compliance with the acceptable solutions for self assessable development in relation to setbacks, site cover and built to boundary walls, or nominated "Alternative Provisions" or Building Assessment Provisions identified in the Domestic Additions Code will not elevate the level of assessment of a proposal from self assessable development to assessable development under the Redlands Planning Scheme. Refer to section 7.3.2 of the Domestic Additions Code. Code Assessable If not self-assessable;	■ Acceptable Solutions in section 7.3.5 of the Domestic Additions Code ■ Acceptable Solutions in section 8.5.4 of the Development Near Underground Infrastructure Code ■ Acceptable Solutions in section 8.6.4 of the Erosion Prevention and Sediment Control Code ■ Acceptable Solutions A1.(1)(a) and (c) in section 7.6.4 of the Excavation and Fill Code ■ Conservation Zone Code ■ Domestic Additions Code ■ Development Near Underground Infrastructure Code ■ Erosion Prevention and Sediment Control Code ■ Excavation and Fill Code ■ Infrastructure Works Code ■ Stormwater Management Code
Domestic Outbuilding	Self-Assessable If - (1) Not in sub-area CN1; (2) Complying with the assessment criteria being the acceptable solutions listed in column 3 **Note -** Non-compliance with the acceptable solutions for self	■ Acceptable Solutions in section 7.5.5 of the Domestic Outbuilding Code ■ Acceptable Solutions in section 8.5.4 of the Development Near Underground Infrastructure Code ■ Acceptable Solutions in section 8.6.4 of the Erosion Prevention and Sediment Control Code ■ Acceptable Solutions A1.(1)(a) and (c) in section 7.6.4 of the Excavation and Fill Code

[4.25] See Part 9 - Schedule 3 - Dictionary, Division 2 - Administrative Terms for a definition of minor building work

Conservation Zone - Table of Assessment for Other Development

column 1	column 2	column 3
Other Development	**Level of Assessment**[4.23]	**Assessment Criteria**
	assessable development in relation to setbacks, site cover and built to boundary walls, or nominated "Alternative Provisions" or Building Assessment Provisions identified in the Domestic Outbuilding Code will not elevate the level of assessment of a proposal from self assessable development to assessable development under the Redlands Planning Scheme. Refer to section 7.5.2 of the Domestic Outbuilding Code. Code Assessable If not self-assessable	■ Conservation Zone Code ■ Domestic Outbuilding Code ■ Development Near Underground Infrastructure Code ■ Erosion Prevention and Sediment Control Code ■ Excavation and Fill Code
On-site raising or relocation of an existing dwelling unit	Self-Assessable If - (1) Not in sub-area CN1; (2) Complying with the assessment criteria being the acceptable solutions listed in column 3 **Note -** Non-compliance with the acceptable solutions for self assessable development in relation to setbacks, site cover and built to boundary walls, or nominated "Alternative Provisions" or Building Assessment Provisions identified in the On-site Raising or Relocation Code will not elevate the level of assessment of a proposal from self assessable development to assessable development under the Redlands Planning Scheme. Refer to section 7.7.2 of the On-site Raising or Relocation Code.	■ Acceptable Solutions in section 7.7.5 of the On-Site Raising or Relocation Code ■ Acceptable Solutions in section 8.5.4 of the Development Near Underground Infrastructure Code ■ Acceptable Solutions in section 8.6.4 of the Erosion Prevention and Sediment Control Code ■ Acceptable Solutions A1.(1)(a) and (c) in section 7.6.4 of the Excavation and Fill Code
	Code Assessable If not self-assessable	■ Conservation Zone Code ■ On-Site Raising and Relocation Code ■ Development Near Underground Infrastructure Code

Conservation Zone - Table of Assessment for Other Development

column 1	column 2	column 3
Other Development	**Level of Assessment**[4.23]	**Assessment Criteria**
		■ Erosion Prevention and Sediment Control Code ■ Excavation and Fill Code ■ Infrastructure Works Code ■ Stormwater Management Code
Private Swimming Pool	Code Assessable	■ Private Swimming Pool Code ■ Development Near Underground Infrastructure Code ■ Erosion Prevention and Sediment Control Code ■ Excavation and Fill Code
Private Tennis Court	Self-Assessable If - (1) Not in sub-area CN1; (2) Complying with the assessment criteria being the acceptable solutions listed in column 3 Code Assessable If not self-assessable	■ Acceptable Solutions in section 7.9.4 of the Private Tennis Court Code ■ Private Tennis Court Code ■ Erosion Prevention and Sediment Control Code ■ Excavation and Fill Code ■ Landscape Code
Operational Work for -		
Constructing a Domestic Driveway Crossover	Self-Assessable If - (1) Not in sub-area CN1; (2) Complying with the assessment criteria being the acceptable solutions listed in column 3 Code Assessable If not self-assessable	■ Acceptable Solutions in section 7.4.4 of the Domestic Driveway Crossover Code ■ Domestic Driveway Crossover Code
Excavation and Fill	Exempt If - (1) Disturbing less than 50m^3 of soil; (2) A height/depth not exceeding 300mm measured from ground level (3) Not in sub-area CN1 Self-Assessable If - (1) Not exempt;	■ Acceptable Solutions in section 8.6.4 of the Erosion Prevention and Sediment Control Code ■ Acceptable Solutions A1.(1)

Conservation Zone - Table of Assessment for Other Development

column 1	column 2	column 3
Other Development	**Level of Assessment**[4.23]	**Assessment Criteria**
	(2) Not in sub-area CN1; (3) Complying with the assessment criteria being the acceptable solutions listed in column 3 Code Assessable If - (1) Not self-assessable; (2) Not in sub-area CN1 Otherwise - Impact Assessable	(b),(c),(d) in section 7.6.4 of the Excavation and Fill Code ■ Erosion Prevention and Sediment Control Code ■ Excavation and Fill Code
Placing an Advertising Device on Premises	Self-Assessable If complying with the assessment criteria being the acceptable solutions listed in column 3 Code Assessable If not self-assessable	■ Acceptable Solutions in section 7.1.4 of the Advertising Devices Code ■ Advertising Devices Code
Operational Work for Reconfiguring a Lot (by Standard Format Plan)	Code Assessable	■ Reconfiguration Code ■ Development Near Underground Infrastructure Code ■ Erosion Prevention and Sediment Control Code ■ Excavation and Fill Code ■ Infrastructure Works Code ■ Landscape Code ■ Stormwater Management Code
Private Waterfront Structure	Code Assessable If not in sub-area CN1 Otherwise - Impact Assessable	■ Private Waterfront Structure Code ■ Development Near Underground Infrastructure Code ■ Erosion Prevention and Sediment Control Code ■ Excavation and Fill Code
All other development not listed in column 1	Exempt	

4.3.6 Compliance with Conservation Zone Code

(1) Development that is consistent with the specific outcomes in section 4.3.8 complies with the Conservation Zone Code.

Note -

The following planning scheme policies will assist in achieving specific outcomes within the Conservation Zone Code -

- Planning Scheme Policy 4 - Ecological Impacts;
- Planning Scheme Policy 5 - Environmental Emissions;
- Planning Scheme Policy 9 - Infrastructure Works.

4.3.7 Overall Outcomes for Conservation Zone Code

(1) The overall outcomes are the purpose of the Conservation Zone Code.

(2) The overall outcomes for the Conservation Zone are described by five key characteristics[4.26] -

(a) Environment;
(b) Uses and Other Development;
(c) Built Form and Density;
(d) Amenity;
(e) Infrastructure.

Each of these is detailed below.

(a) Environment

(i) Ensure uses and other development identify, protect and provide for the long-term management and enhancement of the environmental values associated with this zone, being -

a. habitats necessary for the long term viability of native plants, native animals and ecosystems, whether significant for biodiversity or ecological reasons at the federal, state, regional or local level;
b. inter-tidal lands, waterway, wetland, coastal, bushland and koala habitat;
c. corridors, networks, patches and mosaics of native plants, and all areas where native animals have relatively unimpeded movement when compared to urban areas;
d. corridors and patches of native plants that form links and refuges for native animals, such as koalas and the Glossy Black Cockatoo, to move into and out of urbanised areas;
e. native animals, native plants and ecosystems, any of which are common (least concern), vulnerable, rare or endangered as defined in the *Nature Conservation Act 1992*;
f. areas where the re-growth of native plants will support the role of remnant native plants;
g. areas where there are opportunities for enhancement of environmental values to occur through re-vegetation.
h. where in sub-area CN1 - the ecological function of flood prone, inter-tidal and drainage constrained land.

(ii) Uses and other development minimise adverse impacts on environmental and scenic values by -

a. responding to topographical features;
b. minimising the need for excavation and fill;
c. protecting the site from erosion and sediment run-off;
d. incorporating best practice stormwater management and enhancing water quality;
e. maximising retention of native plants;
f. maximising the use of planting species that are native and characteristic to the area.

[4.26] In combination, the overall outcomes in section 4.3.7(2) (a)-(e) define the character of the Conservation Zone.

(b) Uses and Other Development

(i) Provide for a range of low-key uses and other development that -
a. provide for a lifestyle choice that protects, maintains and positively contributes to environmental values;
b. are based on appreciation of the natural environment where for the purpose of education or scientific study;
c. encourage enjoyment of the natural environment including recreational and tourism uses that contribute to the public and private landscape network;
d. provide opportunities for working from home in a bushland setting;
e. are low-key and have a very low impact on environmental values;
f. cover only a small proportion of the land.

(ii) Within sub-area CN1 - uses and other development, especially dwelling houses, are highly restricted. The nature, operational characteristics and impacts of the majority of uses and other development are inappropriate due to inherent drainage problems and are prejudicial to the protection, long term management and enhancement of the environmental values of sub-area CN1.

(iii) Within sub-area CN2 - uses and other development -
a. are limited to recreational activities that are based on appreciation of the environment;
b. protect the capacity for the land to be used for nature based recreation purposes.

(c) Built Form and Density

(i) The scale of uses and other development minimise adverse impacts on environmental values and the landscape setting by -
a. using a low impact built form that reduces impacts on the land;
b. using areas within the lot or premises that are already cleared or degraded;
c. limiting and containing the footprint of the development;
d. limiting building height to maintain a low-rise appearance that sits among rather than dominates the landscape setting.

(ii) Buildings incorporate a mix of materials and colours that complement the landscape setting.

(d) Amenity

(i) Uses and other development achieve a high standard of environmental and visual amenity by -
a. protecting and enhancing places of cultural significance;
b. protecting scenic values associated with the landscape, including bushland backdrops when viewed from nearby or at a distance;
c. eliminating or mitigating impacts associated with light, noise, air and traffic;
d. in sub-area CN2 - providing -
- high quality useable public open space that meets the nature based recreational needs of the community;
- controlled public access to nature based recreation in a manner that protects the environmental values of the area.

(e) Infrastructure

(i) Uses and other development -
a. minimise adverse impacts on environmental values by providing and designing infrastructure commensurate with the limited range of low-key activities expected in the zone;
b. do not result in unacceptable risk to community infrastructure.

(ii) Infrastructure, specifically stormwater management, is designed to replicate the function and the appearance of natural systems.

(iii) Uses and other development are serviced by infrastructure including -

a. reticulated water or adequate potable water supply;
b. reticulated sewerage; or
c. where the site is not able to be connected to a reticulated sewerage system, wastewater is treated and disposed of on-site subject to site, soil and locational constraints;
d. stormwater drainage that maximises use and protection of natural overland drainage systems;
e. constructed road access that minimises impact on native plants and overland drainage systems;
f. energy;
g. telecommunications;
h. waste and recycling collection.

(iv) In sub-area CN2 - provide pedestrian and cycle paths and associated facilities that are suitably designed for their environment and allow access opportunities within publicly owned land.

Note -

Summary of Conservation Zone sub-areas	
Sub-area	**Description**
Sub-area CN1	Environmental and Drainage Constrained Land
Sub-area CN2	Nature Based Recreation

4.3.8 Specific Outcomes and Probable Solutions applicable to Assessable Development

Assessable Development			
Specific Outcomes		**Probable Solutions**	
	Environment -		
S1.1	(1) Uses and other development maintain, enhance and protect environmental values by - (a) re-vegetating remaining degraded and cleared areas; (b) retaining significant vegetation communities including endangered ecosystems; (c) retaining vulnerable, rare or endangered species; (d) retaining and increasing native animal movement through the premises; (e) retaining as many native plants as possible; (f) preventing the introduction of non-native plants or animals into the premises; (g) controlling stormwater run-off and water quality; (h) maintaining overland drainage systems and waterways in their natural state; (i) minimising the need for excavation and fill; (j) managing stormwater run-off and enhancing water quality; (k) reducing erosion and sediment run-off; (l) where in sub-area CN1 - (i) flood prone, inter-tidal and drainage constrained land provides habitat and movement for native animals, treatment of stormwater run-off, allows for natural infiltration, and manages the effects of erosion; (ii) retaining specific habitat for vulnerable species, such as the Glossy Black Cockatoo.	**P1.1**	(1) No probable solution identified.
S1.2	(1) Landscaping - (a) incorporates plant species that are native to the local area; (b) recognises and enhances the landscape setting of	**P1.2**	(1) Species used for landscaping - (a) are selected from Part 9 - Schedule 10 - Vegetation Species List as being suitable to the area; (b) within the road reserve are

Assessable Development			
Specific Outcomes		**Probable Solutions**	
	the local area; (c) supports the retention and rehabilitation of habitats and movement corridors; (2) Landscaping is included as a component of the stormwater management system; (3) Accessways and other unplanted landscaped areas maximise stormwater infiltration through the use of permeable surfaces.		native species selected from Part 9 - Schedule 9 - Street Trees; (2) No probable solution identified; (3) No probable solution identified. **Note -** For additional assessment criteria refer to Part 8 - ▸ Division 8 - Landscape Code; ▸ Division 9 - Stormwater Management Code.
	Uses and Other Development -		
S2.1	Uses and other development identified as inconsistent in Table 1 are not established or undertaken in the zone.	**P2.1**	No probable solution identified.
S2.2	(1) Uses and other development - (a) support environmental values and provide opportunities for appreciation or study of those values; (b) promote tourism activities and low-key tourism accommodation that is complementary to and has a direct connection with the environmental values such as cabins, cottages, eco-tourism and bed and breakfast; (c) provide opportunities for recreational pursuits that have a direct connection with the environmental values of the land; (d) provide for a residential lifestyle that protects and maintains environmental values; (e) provide opportunities for working from home in a bushland setting; or (2) In sub-area CN1 - uses and other development, especially dwelling houses - are highly restricted due to inherent drainage problems and to ensure the long-term viability of environmental values associated with the land; or (3) In sub-area CN2 - uses and other development - (a) are limited to low impact recreational activities that	**P2.2**	(1) No probable solution identified; or (2) No probable solution identified; or (3) No probable solution identified.

Assessable Development			
Specific Outcomes		**Probable Solutions**	
	are based on an appreciation of the environment, such as walking trails, lookouts or the like; (b) provide adequate facilities to meet user needs, such as parking; (c) result in linkages between open space areas.		
	Built Form and Density -		
S3.1	(1) All buildings, structures, car parking, accessways, service facilities, private open space, on-site waste disposal, storage, and associated tree clearing is limited to reduce adverse impacts on environmental values and the landscape setting.	**P3.1**	(1) All buildings, structures, car parking, accessways, service facilities, private open space, on-site waste disposal, storage, and associated tree clearing of all uses and other development does not exceed - (a) 30 percent for a lot or premises that is less than 1 hectare; or (b) 5 percent plus 3000m^2 for a lot or premises 1 hectare or greater.
S3.2	(1) Buildings and structures - (a) maintain a low-rise appearance; (b) are not visually prominent from external areas.	**P3.2**	(1) Buildings are 8.5 metres or less above ground level.
S3.3	(1) Setbacks contribute to the maintenance and protection of environmental values and the landscape setting.	**P3.3**	(1) Buildings and other structures are setback - (a) for a lot or premises less than 2 hectares - a minimum of 10 metres from all boundaries; or (b) for a lot or premises greater than 2 hectares - (i) a minimum of 20 metres from all boundaries; or (ii) a minimum of 10 metres from all boundaries if screened by planted landscaping; or (c) where within a development envelope, the envelope is located to achieve P3.3(1)(a) or (b)(i) as appropriate.
S3.4	(1) Development envelopes are established through material change of use or reconfiguration and are shaped and located to - (a) accommodate all associated activities,	**P3.4**	(1) No probable solution identified.

Assessable Development			
Specific Outcomes		**Probable Solutions**	
	infrastructure, access and landscaping; (b) be within the most degraded or cleared areas of the premises; (c) minimise the footprint of the development area; (d) minimise edge effects to areas external to the development envelope.		
S3.5	(1) Building design incorporates architectural elements that - (a) exhibit a high degree of interest through the use of colour, angles, materials and shadows; (b) integrate with landscape planting and prevailing landscape features; (c) promote an attractive environmental landscape setting; (d) minimise any adverse overshadowing and reflective impacts; (e) are articulated to minimise appearance of building bulk and size.	**P3.5**	(1) No probable solution identified. **Note -** Refer to the relevant use codes for specific built form assessment criteria.
S3.6	(1) Fencing does not inhibit the movement of native animals - (a) within the lot or premises; (b) to external areas.	**P3.6**	(1) No probable solution identified. **Note -** Refer to Part 11 - Planning Scheme Policy 4 - Ecological Impacts for specific fauna friendly fencing criteria.
	Amenity -		
S4.1	Uses and other development do not adversely impact on cultural heritage values.	**P4.1**	No probable solution identified.
S4.2	Uses and other development protect scenic values associated with the landscape, including bushland backdrops when viewed from nearby or at a distance.	**P4.2**	No probable solution identified.
S4.3	(1) Artificial light does not result in unreasonable disturbance to any person, activity or native animal; (2) Glare and reflection from the sun is minimised through materials and glazing choice.	**P4.3**	(1) The vertical or horizontal illumination resulting from direct, reflected or other incidental light emanating from the premises does not exceed 8 lux when measured at any point at or above ground level - (a) 1.5 metres outside the boundary of a development envelope; or

Assessable Development			
Specific Outcomes		**Probable Solutions**	
			(b) 10 metres from any buildings or work areas; (2) No probable solution identified.
S4.4	(1) Noise generated by the use or other development is compatible with that experienced in this natural environment setting.	**P4.4**	(1) The use or other development does not generate noise, measured as the $L_{Amax,adj,T}$ parameter, at the boundary of the development envelope or 20 metres from any buildings or external work areas, greater than - (a) 5dB(A) above the background noise level between 7am to 10pm; or (b) 3dB(A) above the background noise level between 10pm to 7am. **Note -** The $L_{Amax,adj,T}$ parameter is defined in the *Noise Measurement Manual* (EPA, 2000).
S4.5	Air quality impacts are eliminated or mitigated to a level that is compatible with an environmental setting and with adjoining development by not emitting vibration, odour, fumes, smoke, vapour, steam, soot, ash, dust, grit, oil, radio or electrical interferences beyond an approved development envelope, where one exists, or the property boundary, whichever is the lesser.	**P4.5**	No probable solution identified. **Note -** Refer to Part 11 - Planning Scheme Policy 5 - Environmental Emissions for further information on noise and air quality impacts.
S4.6	(1) Traffic movements are compatible with that experienced in an environmental setting; (2) Road and accessway design prioritise the movement of native animals.	**S4.6**	(1) Non-residential uses for tourist, educational, community or similar are - (a) located on collector or higher order roads; (b) do not gain access from local roads; (2) No probable solution identified.
S4.7	(1) In sub-area CN2 - (a) incorporate opportunities to address issues of security and surveillance; (b) provide adequate lighting for night time users; (c) recognise and minimise impacts on the environmental and scenic values of the land.	**P4.7**	(1) No probable solution identified.
	Infrastructure		
S5.1	Infrastructure is provided in an orderly and cost effective manner that meets the nominated level of	**P5.1**	No probable solution identified.

Assessable Development			
Specific Outcomes		**Probable Solutions**	
	service for the zone.		
S5.2	(1) The location, alignment and design of infrastructure minimises adverse environmental impacts by - (a) replicating natural environments, specifically for stormwater management; (b) co-locating underground or above ground infrastructure along a single alignment, in conjunction with accessways; (c) minimising the removal of native plants; (d) preventing damage to tree roots; (e) maximising retention of native plants within the road reserve, specifically where new roads are proposed; (f) limiting, through co-location, the number of access points to development.	**P5.2**	(1) No probable solution identified.
S5.3	(1) Uses and other development are provided with - (a) reticulated water; or (b) where the premises is not connected or able to be serviced by reticulated water, an adequate supply of potable water.	**P5.3**	(1) Where connection to a reticulated water supply system is not available, development is provided with a minimum potable water supply capacity of 20,000 litres, per equivalent dwelling unit.
S5.4	(1) Uses and other development are provided with infrastructure including - (a) reticulated sewerage; or (b) where not able to be connected to a reticulated sewerage system, wastewater - (i) is treated and disposed of on-site subject to site, soil and locational constraints; (ii) reduces the potential for - a. contaminating groundwater or surface water or wetland environments; b. risks to reticulated water supply and	**P5.4**	(1) No probable solution identified. **Note -** ■ Refer to Part 8 - Division 7 - Infrastructure Works Code for further information on provision, design and construction of infrastructure, roads and pedestrian and cycle paths. ■ Where creating new lots refer to Part 7 - Division 11 - Reconfiguration Code.

Assessable Development			
Specific Outcomes		**Probable Solutions**	
	public health; (c) stormwater management systems that - (i) utilise natural overland systems; (ii) incorporate measures to reduce stormwater quantity and improve stormwater quality; (d) constructed road access that minimises concentration of stormwater; (e) energy; (f) telecommunications; (g) waste and recycling collection facilities.		
S5.5	(1) Waste and recycling is managed to minimise impacts on the environment by - (a) locating waste and recycling storage areas to protect amenity and to provide safe manual handling of containers; (b) screening waste and recycling container storage areas from view; (c) providing for the cleansing of containers in a manner that does not cause adverse environmental impacts.	**P5.5**	(1) No probable solution identified. **Note -** Refer to Part 11 - Planning Scheme Policy 9 - Infrastructure Works – Chapter 16 – Waste Management for further information on waste and recycling container volume, storage, servicing, screening and cleansing.
S5.6	Community infrastructure is able to function effectively during and immediately after flood events.	**P5.6**	Community infrastructure is located at or above the recommended flood levels in Table 2 - Recommended Flood Levels for Community Infrastructure.

Table 1 - Inconsistent Uses and Other Development

Inconsistent Uses
Aged Persons and Special Needs Housing
Agriculture
Airport
Animal Keeping
Apartment Building
Bed and Breakfast - in sub-area CN1 and sub-area CN2
Brothel
Bulky Goods Showroom
Car Wash Facility
Caretakers Dwelling - in sub-area CN1 and sub-area CN2
Cemetery
Child Care Centre
Commercial Office
Community Facility - in sub-area CN1
Display and Sale Activity
Display Dwelling - in sub-area CN1 and sub-area CN2
Drive Through Restaurant
Dual Occupancy
Dwelling House - in sub-area CN1 and sub-area CN2
Education Facility - in sub-area CN1
Emergency Services - in sub-area CN1 and sub-area CN2
Estate Sales Office - in sub-area CN1 and sub-area CN2
Extractive Industry
Forestry
Funeral Parlour
Garden Centre
General Industry
Health Care Centre
Heavy Industry
High Impact Industry
Home Business - in sub-area CN1 and sub-area CN2
Hospital
Hotel
Indoor Recreation Facility
Institution
Intensive Agriculture
Landscape Supply Depot
Marine Services
Mobile Home Park
Multiple Dwelling
Night Club
Outdoor Dining
Outdoor Recreation Facility - in sub-area CN1; or where not catering primarily for tourist activities or recreational pursuits that have a direct connection with the natural or resource values of the area
Passenger Terminal
Place of Worship
Produce Store
Refreshment Establishment - in sub-area CN1; or where having more than 100m^2 gross floor area
Relatives Apartment - in sub-area CN1 and sub-area CN2
Retail Warehouse
Roadside Stall - in sub-area CN1 and sub-area CN2
Rural Enterprise
Service Industry
Service Station
Shop
Small Lot House
Temporary Use - in sub-area CN1
Tourist Accommodation - in sub-area CN1 and sub-area CN2
Tourist Park
Utility Installation - in sub-area CN1and sub-area CN2
Vehicle Depot
Vehicle Parking Station
Vehicle Repair Premises
Veterinary Surgery

Warehouse
Inconsistent Other Development
Creating lots by subdividing another lot by Standard Format Plan - in sub-area CN1 and sub-area CN2
Private Waterfront Structure - in sub-area CN1

Table 2 - Recommended Flood Levels for Community Infrastructure

Type of Community Infrastructure	Recommended Flood Level AEP (ARI)
Emergency services, other than police facilities	0.2% (1 in 500 year ARI)
Emergency shelters	0.5% (1 in 200 year ARI)
Police facilities	0.5% (1 in 200 year ARI)
Hospitals and associated facilities	0.2% (1 in 500 year ARI)
Stores of valuable records or items of historic or cultural significance, such as galleries and libraries	0.5% (1 in 200 year ARI)
Power stations	0.2% (1 in 500 year ARI)
Major switch yards	0.2% (1 in 500 year ARI)
Substations	0.5% (1 in 200 year ARI)
Sewerage treatment plants	1% (1 in 100 year ARI)
Water treatment plants	0.5% (1 in 200 year ARI)
■ State-controlled roads ■ Works of an electricity entity not otherwise listed in this table ■ Railway lines, stations and associated facilities ■ Aviation facilities ■ Communication network facilities	No specific recommended flood level but development proponents should ensure that the infrastructure is optimally located and designed to achieve suitable levels of service, having regard to the processes and policies of the administering government agency.

Reference - *State Planning Policy Guideline 1/03: Mitigating the Adverse Impacts of Flood, Bushfire and Landslide.*

Division 4 - District Centre Zone

4.4.1 Introduction

(1) This division contains the provisions for the District Centre Zone. They are -

(a) The District Centre Zone Tables of Assessment, that incorporates -
- (i) Levels of assessment for development in the District Centre Zone (section 4.4.2);
- (ii) Assessment criteria for development in the District Centre Zone (section 4.4.3);
- (iii) District Centre Zone - Table of Assessment for Material Change of Use of Premises (section 4.4.4);
- (iv) District Centre Zone - Table of Assessment for Other Development not associated with a Material Change of Use (section 4.4.5).

(b) The District Centre Zone Code, that incorporates -
- (i) Compliance with the District Centre Zone Code (section 4.4.6);
- (ii) Overall Outcomes for the District Centre Zone Code (section 4.4.7);
- (iii) Specific Outcomes and Probable Solutions applicable to Assessable Development (section 4.4.8).

4.4.2 Levels of assessment for development in the District Centre Zone

(1) Sections 4.4.4 and 4.4.5 identify the level of assessment for development in the District Centre Zone, as follows -

(a) section 4.4.4 District Centre Zone - Table of Assessment for Making a Material Change of Use of Premises[4.27]-
- (i) column 1 identifies uses that are exempt, self-assessable or assessable;
- (ii) column 2 identifies the level of assessment for the uses listed in column 1;
- (iii) the use is impact assessable where -
  - a. it is defined in Part 9 - Schedule 3 - Dictionary, Division 1 - Uses and is not listed in column 1; or
  - b. it is listed in column 1 and does not meet the level of assessment qualifications listed in column 2; or
  - c. it is not defined in Part 9 - Schedule 3 - Dictionary, Division 1 - Uses.

(b) section 4.4.5 District Centre Zone - Table of Assessment for Other Development not associated with a Material Change of Use -
- (i) column 1 identifies other development that is exempt, self-assessable or assessable;
- (ii) column 2 identifies the level of assessment for other development listed in column 1;
- (iii) where the other development is not listed in column 1 it is exempt.

(2) Overlays may alter the level of assessment identified in (1) (a) and (b)[4.28].

[4.27] Works associated with an application for a material change of use of premises may be assessed together with the material change of use.

[4.28] Refer to Part 5 - Overlays to determine the level of assessment for the use or other development of any Overlay that affects the lot and Part 1, section 1.2.5(10)(f) that explains how the highest level of assessment applies.

4.4.3 Assessment criteria for development in the District Centre Zone

(1) Development in the District Centre Zone is assessed against the assessment criteria listed in column 3 of sections 4.4.4 and 4.4.5, as follows -

(a) acceptable solutions of applicable codes for self-assessable development; or

(b) applicable codes for assessable development.

(2) Self-assessable development that does not comply with all the acceptable solutions of the applicable codes is assessable development.

(3) Impact assessable development will be assessed against all relevant provisions of the Redlands Planning Scheme.

Note –

- The level of assessment indicated within section 4.4.4 - District Centre Zone - Table of Assessment for Material Change of Use of Premises may be affected by Division 2 of the Regulatory Provisions of the *SEQ Regional Plan 2005-2026.*
- The level of assessment for reconfiguration as indicated within section 4.4.5 - District Centre Zone Table of Assessment for Other Development not associated with a Material Change of Use of Premises, where within the Regional Landscape and Rural Production Area or Investigation Area of the *SEQ Regional Plan 2005-2026* -
  - complies with Division 3 of the Regulatory Provisions;
  - has a minimum lot size of 100 hectares, unless the subdivision meets an exclusion documented in Division 3.

4.4.4 District Centre Zone - Table of Assessment for Material Change of Use of Premises

District Centre Zone - Table of Assessment for Material Change of Use of Premises

column 1	column 2	column 3
Use[4.29]	**Level of Assessment**[4.30]	**Assessment Criteria**
Aged Persons and Special Needs Housing	Code Assessable If - (1) The building height is 14 metres or less; (2) The use is undertaken as part of a mixed use development Otherwise - Impact Assessable	■ District Centre Zone Code ■ Aged Persons and Special Needs Housing Code ■ Access and Parking Code ■ Centre Design Code ■ Development Near Underground Infrastructure Code ■ Erosion Prevention and Sediment Control Code ■ Excavation and Fill Code ■ Infrastructure Works Code ■ Landscape Code ■ Stormwater Management Code
Apartment Building	Code Assessable If - (1) The building height is 14 metres or less; (2) The use is undertaken as part of a mixed used development Otherwise - Impact Assessable	■ District Centre Zone Code ■ Apartment Building Code ■ Access and Parking Code ■ Centre Design Code ■ Development Near Underground Infrastructure Code ■ Erosion Prevention and Sediment Control Code ■ Excavation and Fill Code ■ Infrastructure Works Code ■ Landscape Code ■ Stormwater Management Code
Bulky Goods Showroom	Code Assessable	■ District Centre Zone Code ■ Access and Parking Code ■ Centre Design Code ■ Development Near Underground Infrastructure Code ■ Erosion Prevention and Sediment Control Code ■ Excavation and Fill Code ■ Infrastructure Works Code ■ Landscape Code ■ Stormwater Management Code
Caretakers Dwelling	Code Assessable	■ District Centre Zone Code ■ Caretakers Dwelling Code ■ Centre Design Code

[4.29] See Part 9 - Schedule 3 - Dictionary, Division 1 - Uses.
[4.30] See Part 9 - Schedule 3 - Dictionary, Division 2 - Administrative Terms for a definition of level of assessment.

District Centre Zone - Table of Assessment for Material Change of Use of Premises

column 1	column 2	column 3
Use[4.29]	**Level of Assessment**[4.30]	**Assessment Criteria**
Child Care Centre	Code Assessable	■ District Centre Zone Code ■ Child Care Centre Code ■ Access and Parking Code ■ Centre Design Code ■ Development Near Underground Infrastructure Code ■ Erosion Prevention and Sediment Control Code ■ Excavation and Fill Code ■ Infrastructure Works Code ■ Landscape Code ■ Stormwater Management Code
Commercial Office	Self-Assessable If complying with the assessment criteria being the acceptable solutions listed in column 3 Code Assessable If not self-assessable	■ Acceptable solutions in section 8.2.4 of the Centre Activity Code ■ District Centre Zone Code ■ Access and Parking Code ■ Centre Design Code ■ Development Near Underground Infrastructure Code ■ Erosion Prevention and Sediment Control Code ■ Excavation and Fill Code ■ Infrastructure Works Code ■ Landscape Code ■ Stormwater Management Code
Community Facility	Code Assessable	■ District Centre Zone Code ■ Access and Parking Code ■ Centre Design Code ■ Development Near Underground Infrastructure Code ■ Erosion Prevention and Sediment Control Code ■ Excavation and Fill Code ■ Infrastructure Works Code ■ Landscape Code ■ Stormwater Management Code
Display Dwelling	Self-Assessable If complying with the assessment criteria being the acceptable solutions listed in column 3 Code Assessable If - (1) Not self-assessable; (2) Within a dwelling unit approved under this planning scheme	■ Acceptable Solutions in section 6.8.4 of the Display Dwelling Code ■ District Centre Zone Code ■ Display Dwelling Code

District Centre Zone - Table of Assessment for Material Change of Use of Premises

column 1	column 2	column 3
Use[4.29]	**Level of Assessment**[4.30]	**Assessment Criteria**
	Otherwise - Impact Assessable	
Drive Through Restaurant	Code Assessable	■ District Centre Zone Code ■ Drive Through Restaurant Code ■ Access and Parking Code ■ Centre Design Code ■ Development Near Underground Infrastructure Code ■ Erosion Prevention and Sediment Control Code ■ Excavation and Fill Code ■ Infrastructure Works Code ■ Landscape Code ■ Stormwater Management Code
Education Facility	Code Assessable	■ District Centre Zone Code ■ Access and Parking Code ■ Centre Design Code ■ Development Near Underground Infrastructure Code ■ Erosion Prevention and Sediment Control Code ■ Excavation and Fill Code ■ Infrastructure Works Code ■ Landscape Code ■ Stormwater Management Code
Emergency Services	Code Assessable	■ District Centre Zone Code ■ Access and Parking Code ■ Centre Design Code ■ Development Near Underground Infrastructure Code ■ Erosion Prevention and Sediment Control Code ■ Excavation and Fill Code ■ Infrastructure Works Code ■ Landscape Code ■ Stormwater Management Code
Estate Sales Office	Code Assessable	■ District Centre Zone Code ■ Estate Sales Office Code
Funeral Parlour	Code Assessable	■ District Centre Zone Code ■ Access and Parking Code ■ Centre Design Code ■ Development Near Underground Infrastructure Code ■ Erosion Prevention and Sediment Control Code ■ Excavation and Fill Code ■ Infrastructure Works Code ■ Landscape Code ■ Stormwater Management Code

District Centre Zone - Table of Assessment for Material Change of Use of Premises

column 1	column 2	column 3
Use[4.29]	**Level of Assessment**[4.30]	**Assessment Criteria**
Health Care Centre	Self-Assessable If complying with the assessment criteria being the acceptable solutions listed in column 3 Code Assessable If not self-assessable	■ Acceptable solutions in section 8.2.4 of the Centre Activity Code ■ District Centre Zone Code ■ Access and Parking Code ■ Centre Design Code ■ Development Near Underground Infrastructure Code ■ Erosion Prevention and Sediment Control Code ■ Excavation and Fill Code ■ Infrastructure Works Code ■ Landscape Code ■ Stormwater Management Code
Home Business	Self-Assessable If - (1) Within a dwelling unit approved under this planning scheme; (2) Complying with the assessment criteria being the acceptable solutions listed in column 3 Code Assessable If not self-assessable	■ Acceptable Solutions in section 6.15.4 of the Home Business Code ■ District Centre Zone Code ■ Home Business Code ■ Access and Parking Code
Indoor Recreation Facility	Code Assessable	■ District Centre Zone Code ■ Access and Parking Code ■ Centre Design Code ■ Development Near Underground Infrastructure Code ■ Erosion Prevention and Sediment Control Code ■ Excavation and Fill Code ■ Infrastructure Works Code ■ Landscape Code ■ Stormwater Management Code
Minor Utility	Exempt	
Outdoor Dining	Code Assessable	■ District Centre Zone Code ■ Outdoor Dining Code

District Centre Zone - Table of Assessment for Material Change of Use of Premises

column 1	column 2	column 3
Use[4.29]	**Level of Assessment**[4.30]	**Assessment Criteria**
Park	Self-Assessable If - (1) Being undertaken by the local government; (2) On land in the ownership or control of the local government; (3) Complying with the assessment criteria being the acceptable solutions listed in column 3 Code Assessable If not self-assessable	■ Acceptable Solutions in section 6.20.4 of the Park Code ■ Acceptable Solutions in section 8.5.4 of the Development Near Underground Infrastructure Code ■ District Centre Zone Code ■ Park Code ■ Access and Parking Code ■ Development Near Underground Infrastructure Code ■ Infrastructure Works Code ■ Landscape Code ■ Stormwater Management Code
Passenger Terminal	Code Assessable	■ District Centre Zone Code ■ Access and Parking Code ■ Centre Design Code ■ Development Near Underground Infrastructure Code ■ Erosion Prevention and Sediment Control Code ■ Excavation and Fill Code ■ Infrastructure Works Code ■ Landscape Code ■ Stormwater Management Code
Place of Worship	Self-Assessable If complying with the assessment criteria in acceptable solutions as listed in column 3 Code Assessable If not self-assessable	■ Acceptable Solutions in section 8.2.4 of the Centre Activity Code ■ District Centre Zone Code ■ Access and Parking Code ■ Centre Design Code ■ Development Near Underground Infrastructure Code ■ Erosion Prevention and Sediment Control Code ■ Excavation and Fill Code ■ Infrastructure Works Code ■ Landscape Code ■ Stormwater Management Code
Refreshment	Self-Assessable	■ Acceptable Solutions in section of

District Centre Zone - Table of Assessment for Material Change of Use of Premises

column 1	column 2	column 3
Use[4.29]	**Level of Assessment**[4.30]	**Assessment Criteria**
Establishment	If complying with the assessment criteria being the acceptable solutions listed in column 3 Code Assessable If not self-assessable	8.2.4 of the Centre Activity Code ■ District Centre Zone Code ■ Access and Parking Code ■ Centre Design Code ■ Development Near Underground Infrastructure Code ■ Erosion Prevention and Sediment Control Code ■ Excavation and Fill Code ■ Infrastructure Works Code ■ Landscape Code ■ Stormwater Management Code
Retail Warehouse	Code Assessable	■ District Centre Zone Code ■ Access and Parking Code ■ Centre Design Code ■ Development Near Underground Infrastructure Code ■ Erosion Prevention and Sediment Control Code ■ Excavation and Fill Code ■ Infrastructure Works Code ■ Landscape Code ■ Stormwater Management Code
Road	Exempt	
Service Industry	Self-Assessable If complying with the assessment criteria being the acceptable solutions listed in column 3 Code Assessable If 100m^2 or less of gross floor area Otherwise - Impact Assessable	■ Acceptable Solutions in section of 8.2.4 of the Centre Activity Code ■ District Centre Zone Code ■ Access and Parking Code ■ Centre Design Code ■ Development Near Underground Infrastructure Code ■ Erosion Prevention and Sediment Control Code ■ Excavation and Fill Code ■ Infrastructure Works Code ■ Landscape Code ■ Stormwater Management Code
Shop	Self-Assessable	■ Acceptable Solutions in section

District Centre Zone - Table of Assessment for Material Change of Use of Premises

column 1	column 2	column 3
Use[4.29]	**Level of Assessment**[4.30]	**Assessment Criteria**
	If complying with the assessment criteria being the acceptable solutions listed in column 3 Code Assessable If not self-assessable	8.2.4 of the Centre Activity Code ■ District Centre Zone Code ■ Access and Parking Code ■ Centre Design Code ■ Development Near Underground Infrastructure Code ■ Erosion Prevention and Sediment Control Code ■ Excavation and Fill Code ■ Infrastructure Works Code ■ Landscape Code ■ Stormwater Management Code
Telecommunications Facility	Self-Assessable If complying with the assessment criteria being the acceptable solutions listed in column 3 Code Assessable If not self-assessable	■ Acceptable Solutions in section 6.26.4 of the Telecommunications Facility Code ■ Acceptable Solutions in section 8.5.4 of the Development Near Underground Infrastructure Code ■ Acceptable Solutions in section 8.6.4 of the Erosion Prevention and Sediment Control Code ■ Acceptable Solutions A1.(1)(a) and (c) in section 7.6.4 of the Excavation and Fill Code ■ District Centre Zone Code ■ Telecommunications Facility Code ■ Access and Parking Code ■ Centre Design Code ■ Development Near Underground Infrastructure Code ■ Erosion Prevention and Sediment Control Code ■ Excavation and Fill Code ■ Infrastructure Works Code ■ Landscape Code
Temporary Use	Self-Assessable If complying with the assessment criteria being the acceptable solutions listed in column 3 Code Assessable If not self-assessable	■ Acceptable Solutions in section 6.27.4 of the Temporary Use Code ■ District Centre Zone Code ■ Temporary Use Code

District Centre Zone - Table of Assessment for Material Change of Use of Premises

column 1	column 2	column 3
Use[4.29]	**Level of Assessment**[4.30]	**Assessment Criteria**
Tourist Accommodation	Code Assessable	■ District Centre Zone Code ■ Tourist Accommodation Code ■ Access and Parking Code ■ Centre Design Code ■ Development Near Underground Infrastructure Code ■ Erosion Prevention and Sediment Control Code ■ Excavation and Fill Code ■ Infrastructure Works Code ■ Landscape Code ■ Stormwater Management Code
Utility Installation	Code Assessable	■ District Centre Zone Code ■ Access and Parking Code ■ Development Near Underground Infrastructure Code ■ Erosion Prevention and Sediment Control Code ■ Excavation and Fill Code ■ Landscape Code ■ Stormwater Management Code
Vehicle Parking Station	Code Assessable If the use is undertaken as part of a mixed use development Otherwise - Impact Assessable	■ District Centre Zone Code ■ Access and Parking Code ■ Centre Design Code ■ Development Near Underground Infrastructure Code ■ Erosion Prevention and Sediment Control Code ■ Excavation and Fill Code ■ Infrastructure Works Code ■ Landscape Code ■ Stormwater Management Code
Veterinary Surgery	Code Assessable	■ District Centre Zone Code ■ Access and Parking Code ■ Centre Design Code ■ Development Near Underground Infrastructure Code ■ Erosion Prevention and Sediment Control Code ■ Excavation and Fill Code ■ Infrastructure Works Code ■ Landscape Code ■ Stormwater Management Code
Defined uses not listed in column 1	Impact Assessable	

District Centre Zone - Table of Assessment for Material Change of Use of Premises

column 1	column 2	column 3
Use[4.29]	Level of Assessment[4.30]	Assessment Criteria
Defined uses listed in column 1 that do not comply with the level of assessment qualifications in column 2	Impact Assessable	
Uses not defined in Part 9 - Schedule 3 - Dictionary, Division 1 - Uses	Impact Assessable	

4.4.5 District Centre Zone - Table of Assessment for Other Development not associated with a Material Change of Use

District Centre Zone - Table of Assessment for Other Development

column 1	column 2	column 3
Other Development	**Level of Assessment**[4.31]	**Assessment Criteria**
Reconfiguration for -		
Creating lots by subdividing another lot by Standard Format Plan[4.32]	Code Assessable	■ District Centre Zone Code ■ Reconfiguration Code ■ Development Near Underground Infrastructure Code ■ Excavation and Fill Code ■ Infrastructure Works Code ■ Stormwater Management Code
Creating lots by subdividing another lot by - ■ Building Format Plan; or ■ Volumetric Format Plan	Code Assessable	■ District Centre Zone Code ■ Reconfiguration Code
■ Rearranging the boundaries of a lot by registering a plan of subdivision; or ■ Dividing land into parts by Agreement; or ■ Creating an easement giving access to a lot from a constructed road	Code Assessable	■ Reconfiguration Code
Building Work for -		
Communications Structures	Exempt If minor building works[4.33] Self-Assessable If - (1) Not exempt; (2) Complying with the assessment criteria being the acceptable solutions listed in column 3 Code Assessable If not self-assessable	■ Acceptable Solutions in section 7.2.4 of the Communications Structures Code ■ Communications Structures Code

[4.31] See Part 9 - Schedule 3 - Dictionary, Division 2 - Administrative Terms for a definition of level of assessment.
[4.32] Whether or not having a Community Management Statement.
[4.33] See Part 9 - Schedule 3 - Dictionary, Division 2 - Administrative Terms for a definition of minor building work.

District Centre Zone - Table of Assessment for Other Development

column 1	column 2	column 3
Other Development	**Level of Assessment**[4.31]	**Assessment Criteria**
Operational Works for -		
Excavation and Fill	Exempt If - (1) Disturbing less than 50m^3 of soil; (2) A height/depth not exceeding 300mm measured from ground level Self-Assessable If - (1) Not exempt; (2) Complying with the assessment criteria being the acceptable solutions listed in column 3 Code Assessable If not self-assessable	■ Acceptable Solutions in section 8.6.4 of the Erosion Prevention and Sediment Control Code ■ Acceptable Solutions A1.(1)(b),(c),(d) in section 7.6.4 of the Excavation and Fill Code ■ Erosion Prevention and Sediment Control Code ■ Excavation and Fill Code
Placing an Advertising Device on Premises	Self-Assessable If complying with the assessment criteria being the acceptable solutions listed in column 3 Code Assessable If not self-assessable	■ Acceptable Solutions in section 7.1.4 of the Advertising Devices Code ■ Advertising Devices Code
Operational Work for Reconfiguring a Lot (by Standard Format Plan)	Code Assessable	■ Reconfiguration Code ■ Development Near Underground Infrastructure Code ■ Erosion Prevention and Sediment Control Code ■ Excavation and Fill Code ■ Infrastructure Works Code ■ Landscape Code ■ Stormwater Management Code
All other development not listed in column 1	Exempt	

4.4.6 Compliance with District Centre Zone Code

(1) Development that is consistent with the specific outcomes in section 4.4.8 complies with the District Centre Zone Code.

Note -

The following planning scheme policies will assist in achieving specific outcomes within the District Centre Zone Code -

- Planning Scheme Policy 5 - Environmental Emissions;
- Planning Scheme Policy 9 - Infrastructure Works;
- Planning Scheme Policy 12 - Social and Economic Impact Assessment.

4.4.7 Overall Outcomes for District Centre Zone Code

(1) The overall outcomes are the purpose of the District Centre Zone Code.

(2) The overall outcomes sought for the District Centre Zone Code are described by five key characteristics [4.34] -

(a) Uses and Other Development;
(b) Built Form and Density;
(c) Amenity;
(d) Environment;
(e) Infrastructure.

Each of these is detailed below.

(a) Uses and Other Development

(i) Provide for a range of uses that -
a. enhance and protect the primacy, vitality and vibrancy of the City's network of centres;
b. meet demonstrated community needs to serve a district sized catchment;
c. includes supermarkets, specialty stores, commercial activities and community services;
d. provides employment opportunities;
e. provide a focus for community interaction and activity;
f. are located near schools, parkland and community facilities to form part of a district community node;
g. are conveniently accessible to the district catchment area they serve by private vehicle, public transport and pedestrian and cycle routes.

(ii) Provide for a limited range of residential and tourist accommodation uses that -
a. contribute to the economic and social vitality of the centre;
b. maximise accessibility for a residential and tourist population to services, facilities and employment;
c. are designed and integrated as part of a mixed use development.

(b) Built Form and Density

(i) The scale of uses and other development achieve a high standard of built form and urban design that -
a. reinforce the "sense of place" established by the centre;
b. maintain a mid-rise integrated development appearance;
c. limit the impact of over shadowing on public and civic places;
d. contribute to an attractive streetscape along all road frontages;
e. ensure a high level of physical and visual interaction and pedestrian access at ground level.

[4.34] In combination, the overall outcomes in section 4.4.7(2)(a-e) define the character of the District Centre Zone.

(ii) The density of uses and other development -
a. maximise the coherent and efficient use of land;
b. do not overwhelm or dominate the centre or adjacent zones;
c. provides areas for public places, landscaping and streetscape works.

(c) Amenity

(i) Uses and other development achieve a high standard of centre amenity by -
a. ensuring car parking and servicing areas are discretely located and do not visually dominate the centre;
b. ensuring residential and tourist accommodation uses have access to natural light and ventilation, privacy and private and communal open space;
c. protecting and enhancing places of cultural significance and streetscape value;
d. providing high quality useable public and civic places within and external to the built form;
e. providing a high quality landscape and streetscape setting that complements the large scale nature of the built form and recognises the centre function;
f. mitigating impacts associated with light, noise, air and traffic.

(d) Environment

(iii) Uses and other development minimise adverse impacts on environmental and scenic values by -
a. minimising the need for excavation and fill;
b. protecting the site from erosion;
c. incorporating best practice stormwater management and water quality;
d. maximising the use of planting species that are native to the area.

(e) Infrastructure

(iv) Uses and other development -
a. maximise the efficient use of existing infrastructure;
b. provide for the planned extension of infrastructure in an orderly and cost effective manner.

(v) Uses and other development are serviced by infrastructure including -
a. reticulated water;
b. reticulated sewerage;
c. stormwater drainage;
d. constructed road access;
e. energy;
f. telecommunications,
g. waste and recycling collection.

(vi) Uses and other development reinforce a legible, integrated, efficient, safe and attractive movement network that -
a. incorporate a full range of movement modes and facilities including public transport, passenger vehicles, walking and cycling;
b. provide pedestrian, cycle and vehicle connectivity and ease of mobility within the centre and with surrounding neighbourhoods, and public transport stops, stations and interchanges;
c. minimise conflicts between traffic using the centre and through traffic and between pedestrians, cyclists and vehicles;
d. maximise opportunities for the provision of pedestrian and cycle paths throughout the centre.

4.4.8 Specific Outcomes and Probable Solutions applicable to Assessable Development

Assessable Development			
Specific Outcomes		**Probable Solutions**	
	Uses and Other Development -		
S1.1	Uses identified as inconsistent in Table 1 are not established in the zone.	**P1.1**	No probable solution identified.
S1.2	(1) The zone provides for a range of centre uses that - (a) enhance and protect the role and function of the City's network of centres; (b) meet demonstrated community needs to service a catchment of up to 15,000 people; (c) include supermarkets, discount department stores, specialty stores, commercial activities and community services.	**P1.2**	(1) No probable solution identified.
S1.3	Residential and tourist accommodation uses are designed and integrated as part of a mixed use development ensuring the maintenance of active street frontages at ground level.	**P1.3**	No probable solution identified.
	Built Form and Density -		
S2.1	(1) Building height adopts a mid-rise built form that ensures a high quality appearance when viewed from within and external to the centre; (2) Where a use proposes a building height greater than an existing dwelling unit in an adjoining residential zone, site layout and building design minimises any potential impacts of overshadowing and loss of privacy.	**P2.1**	(1) Building or structure height is 14 metres or less above ground level; (2) No probable solution identified.
S2.2	(1) Site coverage maintains a balance between built and unbuilt areas of the site and contributes to a high quality centre environment by - (a) ensuring adequate areas are available for high quality landscaping and streetscape treatments; (b) providing areas for integrated car parking and servicing functions.	**P2.2**	(1) No probable solution identified.

Assessable Development			
Specific Outcomes		**Probable Solutions**	
S2.3	(1) Front setbacks are consistent with the desired streetscape for that part of the centre and provide a generous covered pedestrian environment; (2) Side and rear set backs - (a) maintain privacy, breezes and solar access to adjoining residential zones; (b) provide areas for service functions such as car parking; (c) provide areas for landscaping and streetscape treatments; (3) Where the land backs onto a residential zone across a street, high quality streetscape treatments, including landscaped buffers, are provided along the whole of the rear frontage.	**P2.3**	(1) No probable solution identified; (2) Where a rear and/or side boundary adjoins a residential zone - (a) the building setback from the boundary is a minimum of 3 metres or half the height of the building at that point, whichever is greater; (b) this boundary is landscaped with trees that are capable of growing to above the height of the eaves of building within 5 years of planting; (c) is supported by a 2 metre high acoustic and visual screen fence along the entire length of the boundary; (3) No probable solution identified.
S2.4	Residential and tourist accommodation uses are maximised to ensure a greater number of residents and tourists can reside or be accommodated in close proximity to services, attractions, facilities and employment opportunities within the centre.	**P2.4**	No probable solution identified.
S2.5	(1) Building design and layout incorporates architectural elements that - (a) reinforce a high quality centre environment; (b) exhibit a high degree of interest through the use of colour, angles, materials and shadows; (c) provide functional and attractive facades that contribute to a high quality built form and streetscape along all road frontages; (d) minimise any adverse overshadowing and reflective impact on public and civic places and adjoining zones; (e) provide physical connections and linkages between buildings and between buildings and public places, to encourage pedestrian movement; (f) ensure buildings have their primary access to the main street frontage and provide an active frontage to all other streets; (g) incorporate covered	**P2.5**	(1) No probable solution identified.

Assessable Development			
Specific Outcomes		**Probable Solutions**	
	pedestrian walkways and a covered pedestrian spine that will provides direct access to shops and civic areas and links all areas of the centre; (h) ensure high levels of physical and visual interaction and pedestrian access at ground level.		
	Amenity		
S3.1	High quality landscaping and streetscaping treatments are incorporated to reinforce a sense of place and contribute to the overall attractiveness and function of the centre.	**P3.1**	No probable solution identified.
S3.2	Development does not impact on the cultural heritage values of a registered heritage place(s) or character precinct.	**P3.2**	No probable solution identified.
S3.3	(1) Residential and tourist accommodation uses are capable of receiving solar access; (2) Building design maintains solar access to the habitable rooms and private open space areas of adjoining residential zoned properties.	**P3.3**	(1) No probable solution identified; (2) No probable solution identified.
S3.4	(1) Residential and tourist accommodation uses maximise privacy (visual and acoustic) through - (a) locating habitable rooms so they do not directly overlook habitable rooms of adjacent residential uses either within or adjoining the development; (b) separating noise generating areas from sleeping areas.	**P3.4**	(1) No probable solution identified.
S3.5	(1) Residential and tourist accommodation uses ensure, private and communal open space areas are - (a) clearly defined for their intended user and use; (b) easily accessible from living or common areas; (c) useable in size and dimension.	**P3.5**	(1) No probable solution identified.

Assessable Development			
Specific Outcomes		**Probable Solutions**	
S3.6	(1) Artificial light does not result in unreasonable disturbance to any person or activity; (2) Lighting is designed to avoid spilling onto adjoining residential zones; (3) Glare and reflection of the sun are minimised through material and glazing choice.	**P3.6**	(1) No probable solution identified; (2) The vertical illumination resulting from direct, reflected or other incidental light emanating from the site does not exceed 8 lux when measured at any point 1.5 metres outside the boundary at or above ground level; (3) No probable solution identified.
S3.7	(1) Noise generated by the use or other development is compatible with that experienced in a centre environment; (2) Where residential and tourist accommodation uses are incorporated as part of a mixed use development or the development adjoins a residential zone, non-residential uses are located, and designed to ameliorate noise impacts.	**P3.7**	(1) No probable solution identified; (2) The use or other development does not generate noise, measured as the $L_{Amax,adj,T}$ parameter, at the boundary of the nearest residential zone, greater than - (a) 5dB(A) above the background noise level between 7 am to 10 pm; or (b) 3dB(A) above the background noise level between 10 pm to 7 am. **Note -** The $L_{Amax,adj,T}$ parameter is defined in the *Noise Measurement Manual* (Environmental Protection Agency, 2000).
S3.8	Air quality impacts are eliminated or mitigated to a level that is compatible with a centre environment.	**P3.8**	No probable solution identified. **Note -** Refer to Part 11 - Planning Scheme Policy 5 - Environmental Emissions for further information on noise and air quality impacts.
S3.9	(1) Uses and other development reinforce the maintenance of high standard of centre amenity by - (a) locating air conditioning units and/or refrigeration units so that they are not visually obtrusive and do not cause adverse visual or noise impacts on adjoining premises; (b) locating car parking and servicing areas to minimise impacts on adjoining premises and on the streetscape.	**P3.9**	(1) No probable solution identified.

Assessable Development			
Specific Outcomes		**Probable Solutions**	
S3.10	(1) Uses and other development are designed in accordance with the principles of Crime Prevention through Environmental Design (CPTED) to assist in crime prevention by being - (a) orientated towards the street to provide opportunities for casual surveillance of public and civic places; (b) designed and well lit to ensure safety and casual surveillance of car parking areas and pedestrian and cycle paths.	**P3.10**	(1) No probable solution identified.
	Environment -		
S4.1	(1) Uses and other developments are consistent with the effective protection of environmental values from external impacts including - (a) stormwater run-off; (b) water quality; (c) erosion and sediment run-off; (d) pollution control.	**P4.1**	No probable solution identified.
S4.2	Uses and other development are designed to minimise the need for excavation and fill.	**P4.2**	No probable solution identified. **Note -** Refer to Part 7 - Division 6 - Excavations and Fill Code for assessment criteria where the site requires earthworks.
S4.3	(1) Landscaping is designed to - (a) incorporate plant species that are native to the local area; (b) recognise and enhance the landscape and streetscape character of the centre; (c) incorporate landscaping as a component of the stormwater management system.	**P4.3**	(1) Species used for landscaping are selected from the native plants listed in - (a) Schedule 10 - Vegetation Species List; (b) Schedule 9 - Street Trees where within the road reserve. **Note -** For additional assessment criteria refer to Part 8 - ■ Division 8 - Landscape Code; ■ Division 9 - Stormwater Management Code.
	Infrastructure		
S5.1	Infrastructure is provided to be readily integrated with existing systems and facilitate the orderly provision of future systems.	**P5.1**	No probable solutions identified.

Assessable Development			
Specific Outcomes		**Probable Solutions**	
S5.2	Infrastructure is designed, located, constructed and managed in a manner that recognises and contributes to the sense of place and attractiveness of the centre.	**P5.2**	No probable solution identified.
S5.3	(1) All uses and other development are serviced by infrastructure, including - (a) reticulated water; (b) reticulated sewerage; (c) stormwater drainage; (d) constructed road access; (e) energy; (f) telecommunications; (g) waste and recycling collection facilities.	**P5.3**	(1) No probable solution identified.
S5.4	(1) Waste and recycling is managed to minimise impacts on the environment and nearby premises by - (a) locating waste and recycling storage areas to protect amenity and to provide safe manual handling of containers; (b) screening waste and recycling container storage areas from view; (c) providing for the cleansing of containers in a manner that does not cause adverse environmental impacts; (2) Uses and other development - (a) provide safe and efficient manoeuvring for waste collection vehicles; (b) ensure all bulk waste and recycling containers are serviced off-street and not on roads with public access; (c) ensure sufficient vertical clearance for container servicing; (d) ensure unobstructed access to containers by collection vehicles; (3) Waste and recycling storage is designed and located to - (a) provide adequate container volume to contain the waste and recyclables; (b) provide recycle containers in an equivalent or greater volume to waste containers; (c) provide a dedicated waste and recycling container storage area that is convenient and safe to use;	**P5.4**	(1) No probable solution identified. (2) No probable solution identified. (3) No probable solution identified. **Note -** Refer to Part 11 - Planning Scheme Policy 9 - Infrastructure Works – Chapter 16 – Waste Management for further information on waste and recycling container volume, storage, servicing, screening and cleansing. Refer to Part 8 - Division 1 - Access and Parking Code for waste collection vehicle servicing and manoeuvring assessment criteria.

Assessable Development			
Specific Outcomes		**Probable Solutions**	
	(d) ensure containers are located on impermeable surfaces.		
S5.5	(1) Uses and other development maximise the safe, convenient and comfortable movement of public transport passengers, pedestrians and cyclists by providing - (a) links to public transport routes, stops and interchanges in the most accessible and convenient locations to maximise their use; (b) pedestrian and cycle paths, throughout the centre and linking to surrounding neighbourhoods; (c) pathways, building entrances, amenities and seating that support accessibility for people with special needs.	**P5.5**	(1) No probable solution identified.
S5.6	(1) Opportunities for cycling as a modal choice for employees and customers are provided through - (a) clearly defined on-site paths and facilities; (b) secure cycle storage areas, and facilities including showers and lockers for employees; (c) provision of cycle racks for customers.	**P5.6**	(1) Cycling facilities include - (a) On-site bicycle facilities that are designed and constructed in accordance with *AUSTROAD's Traffic Engineering Practice, Part 14 - Bicycles*; (b) the following for employees - (i) 1 bicycle space per 200m^2 of gross floor area; (ii) 1 personal locker per 2 bicycle parking spaces; (iii) 1 shower cubicle with ancillary changing area per 5 bicycle spaces; or (iv) 1 shower cubicle with ancillary changing area if less than 5 bicycle spaces are required; (c) 1 bicycle space per 200m^2 of gross floor area of customers, up to a maximum of 10 spaces.
S5.7	(1) The design and layout of vehicular access, parking facilities and service delivery areas are - (a) located to minimise disruption to traffic flow, promote efficiency and public transport priority and minimise impact on adjoining areas; (b) located and designed to minimise conflicts between	**P5.7**	(1) No probable solution identified. **Note -** Refer to Part 8 - ■ Division 1 - Access and Parking Code for further assessment criteria related to access and internal movement. ■ Division 7 - Infrastructure Works Code for further assessment criteria on provision, design and

Assessable Development			
Specific Outcomes		**Probable Solutions**	
	pedestrians and cyclists with vehicles and service delivery vehicles; (c) located to maintain a high quality built form and streetscape from along all road frontages; (d) located to provide for integrated car parking and service delivery areas.		construction of utility infrastructure and pedestrian and cycle paths.
S5.8	Community infrastructure is able to function effectively during and immediately after flood events.	**P5.8**	Community infrastructure is located at or above the recommended flood levels in Table 2 - Recommended Flood Levels for Community Infrastructure.

Table 1 - Inconsistent Uses

Inconsistent Uses
Agriculture
Airport
Animal Keeping
Apartment Building - where not part of a mixed use development
Bed and Breakfast
Brothel
Cemetery
Display Dwelling - where not part of a mixed use development
Dual Occupancy
Dwelling House
Extractive Industry
Forestry
General Industry
Heavy Industry
High Impact Industry
Home Business - where proposed in a dwelling unit not approved under this planning scheme
Intensive Agriculture
Landscape Supply Depot
Marine Services
Mobile Home Park
Multiple Dwelling - where not part of a mixed use development
Relatives Apartment
Roadside Stall
Rural Enterprise
Service Industry - where having more than $100m^2$ gross floor area
Small Lot House
Tourist Park
Vehicle Depot
Vehicle Repair Premises - if not in conjunction with a service station
Warehouse

Table 2 - Recommended Flood Levels for Community Infrastructure

Type of Community Infrastructure	Recommended Flood Level AEP (ARI)
Emergency services, other than police facilities	0.2% (1 in 500 year ARI)
Emergency shelters	0.5% (1 in 200 years ARI)
Police facilities	0.5% (1 in 200 years ARI)
Hospitals and associated facilities	0.2% (1 in 500 years ARI)
Stores of valuable records or items of historic or cultural significance, such as galleries and libraries	0.5% (1 in 200 years ARI)
Power stations	0.2% (1 in 500 years ARI)
Major switch yards	0.2% (1 in 500 years ARI)
Substations	0.5% (1 in 200 years ARI)
Sewerage treatment plants	1% (1 in 100 years ARI)
Water treatment plants	0.5% (1 in 200 years ARI)
■ State-controlled roads ■ Works of an electricity entity not otherwise listed in this table ■ Railway lines, stations and associated facilities ■ Aviation facilities ■ Communication network facilities	No specific recommended flood level by development proponents should ensure that the infrastructure is optimally located and designed to achieve suitable levels of service, having regard to the processes and policies of the administering government agency.

Reference - *State Planning Policy Guideline 1/03: Mitigating the Adverse Impacts of Flood, Bushfire and Landslide.*

Division 5 - Emerging Urban Community Zone

4.5.1 Introduction

(1) This division contains the provisions for the Emerging Urban Community Zone. They are -

(2) The Emerging Urban Community Zone Tables of Assessment, that incorporates -
- (a) Levels of assessment for development in the Emerging Urban Community Zone (section 4.5.2);
- (b) Assessment criteria for development in the Emerging Urban Community Zone (section 4.5.3);
- (c) Emerging Urban Community Zone - Table of Assessment for Material Change of Use of Premises (section 4.5.4);
- (d) Emerging Urban Community Zone – Table of Assessment for Other Development not associated with a Material Change of Use of Premises (section 4.5.5).

(3) The Emerging Urban Community Zone Code, that incorporates -
- (a) Compliance with the Emerging Urban Community Zone Code (section 4.5.6);
- (b) Overall Outcomes for the Emerging Urban Community Zone Code (section 4.5.7);
- (c) Specific Outcomes and Probable Solutions applicable to Assessable Development (section 4.5.8).

4.5.2 Levels of assessment for development in the Emerging Urban Community Zone

(4) Sections 4.5.4 and 4.5.5 identify the level of assessment for development in the Emerging Urban Community Zone, as follows -

- (a) section 4.5.4 Emerging Urban Community Zone - Table of Assessment for Making a Material Change of Use of Premises[4.35] -
  - (i) column 1 identifies uses that are exempt, self-assessable or assessable;
  - (ii) column 2 identifies the level of assessment for the uses listed in column 1;
  - (iii) the use is impact assessable where -
    - a. it is defined in Schedule 3 - Dictionary, Division 1 - Uses and is not listed in column 1; or
    - b. it is listed in column 1 and does not comply with the level of assessment qualifications listed in column 2; or
    - c. it is not defined in Schedule 3 - Dictionary, Division 1 - Uses.

- (b) section 4.5.5 Emerging Urban Community Zone - Table of Assessment for Other Development not associated with a Material Change of Use of Premises -
  - (i) column 1 identifies other development that is exempt, self-assessable or assessable;
  - (ii) column 2 identifies the level of assessment for other development listed in column 1;
  - (iii) where the other development is not listed in column 1 it is exempt.

(5) Overlays may alter the level of assessment identified in (1)(a) and (b)[4.36].

[4.35] Works associated with an application for a material change of use of premises may be assessed together with the material change of use.

[4.36] Refer to Part 5 - Overlays to determine the level of assessment for the use or other development where an Overlay affects the lot and Part 1, section 1.2.5(10)(f) that explains how the highest level of assessment applies.

4.5.3 Assessment criteria for development in the Emerging Urban Community Zone

(6) Development in the Emerging Urban Community Zone is assessed against the assessment criteria listed in column 3 of sections 4.5.4 and 4.5.5, as follows -

(a) acceptable solutions of applicable codes for self-assessable development; or

(b) applicable codes for code assessable development.

(7) Self-assessable development that does not comply with all the acceptable solutions of the applicable codes is assessable development. Non compliance with only the acceptable solutions for self-assessable development in relation to setbacks and site cover under the QDC or nominated "Alternative Provisions" or Building Assessment Provisions will not elevate the level of assessment of a proposal from self assessable development to assessable development under the Redlands Planning Scheme. In these instances, the local government will undertake the functions of a referral agency with Concurrence Agency jurisdiction under IPA to assess and determine these matters.

(8) Impact assessable development will be assessed against all relevant provisions of the Redlands Planning Scheme.

Note –

- The level of assessment indicated within section 4.5.4 - Emerging Urban Community Zone - Table of Assessment for Material Change of Use of Premises may be affected by Division 2 of the Regulatory Provisions of the *SEQ Regional Plan 2005-2026.*
- The level of assessment for reconfiguration as indicated within section 4.5.5 - Emerging Urban Community Zone - Table of Assessment for Other Development not associated with a Material Change of Use of Premises, where within the Regional Landscape and Rural Production Area or Investigation Area of the *SEQ Regional Plan 2005-2026* -
  - complies with Division 3 of the Regulatory Provisions;
  - has a minimum lot size of 100 hectares, unless the subdivision meets an exclusion documented in Division 3.

4.5.4 Emerging Urban Community Zone - Table of Assessment for Material Change of Use of Premises

Emerging Urban Community Zone -
Table of Assessment for Material Change of Use of Premises

column 1	column 2	column 3
Use[4.37]	**Level of Assessment**[4.38]	**Assessment Criteria**
Agriculture	Code Assessable	■ Emerging Urban Community Zone Code ■ Agriculture Code ■ Access and Parking Code ■ Infrastructure Works Code ■ Stormwater Management Code
Animal Keeping	Code Assessable	■ Emerging Urban Community Zone Code ■ Animal Keeping Code ■ Access and Parking Code ■ Infrastructure Works Code ■ Stormwater Management Code
Bed and Breakfast	Self-Assessable If complying with the assessment criteria being the acceptable solutions listed in column 3 Code Assessable If not self-assessable	■ Acceptable Solutions in section 6.5.4 of the Bed and Breakfast Code ■ Emerging Urban Community Zone Code ■ Bed and Breakfast Code ■ Infrastructure Works Code ■ Landscape Code
Caretakers Dwelling	Code Assessable	■ Emerging Urban Community Zone Code ■ Caretakers Dwelling Code
Community Facility	Code Assessable	■ Emerging Urban Community Zone Code ■ Access and Parking Code ■ Development Near Underground Infrastructure Code ■ Erosion Prevention and Sediment Control Code ■ Excavation and Fill Code ■ Infrastructure Works Code ■ Landscape Code ■ Stormwater Management Code

[4.37] See Schedule 3 - Dictionary, Division 1 - Uses.
[4.38] See Schedule 3 - Dictionary, Division 2 - Administrative Terms for a definition of level of assessment.

Emerging Urban Community Zone - Table of Assessment for Material Change of Use of Premises

column 1	column 2	column 3
Use[4.37]	**Level of Assessment**[4.38]	**Assessment Criteria**
Dwelling House	Code Assessable	■ Emerging Urban Community Zone Code ■ Dwelling House Code ■ Development Near Underground Infrastructure Code ■ Erosion Prevention and Sediment Control Code ■ Excavation and Fill Code ■ Infrastructure Works Code ■ Stormwater Management Code
Home Business	Self-Assessable If complying with the assessment criteria being the acceptable solutions listed in column 3 Code Assessable If not self-assessable	■ Acceptable Solutions in section 6.15.4 of the Home Business Code ■ Emerging Urban Community Zone Code ■ Home Business Code ■ Access and Parking Code And where being carried out in a domestic outbuilding - ■ Domestic Outbuilding Code ■ Development Near Underground Infrastructure Code ■ Erosion Prevention and Sediment Control Code ■ Excavation and Fill Code
Minor Utility	Exempt	
Park	Self-Assessable If - (1) Being undertaken by the local government; (2) On land in the ownership or control of the local government; (3) Complying with the assessment criteria being the acceptable solutions listed in column 3 Code Assessable If not self-assessable	■ Acceptable Solutions in section 6.20.4 of the Park Code ■ Acceptable Solutions of section 8.5.4 of the Development Near Underground Infrastructure Code ■ Emerging Urban Community Zone Code ■ Park Code ■ Access and Parking Code ■ Development Near Underground Infrastructure Code ■ Infrastructure Works Code

Emerging Urban Community Zone - Table of Assessment for Material Change of Use of Premises

column 1	column 2	column 3
Use[4.37]	**Level of Assessment**[4.38]	**Assessment Criteria**
		■ Landscape Code ■ Stormwater Management Code
Relatives Apartment	Code Assessable	■ Emerging Urban Community Zone Code ■ Relatives Apartment Code ■ Development Near Underground Infrastructure Code ■ Erosion Prevention and Sediment Control Code ■ Excavation and Fill Code ■ Stormwater Management Code
Road	Exempt	
Roadside Stall	Code Assessable	■ Emerging Urban Community Zone Code ■ Roadside Stall Code ■ Access and Parking Code ■ Development Near Underground Infrastructure Code ■ Infrastructure Works Code
Telecommunications Facility	Self-Assessable [4.39] If complying with the assessment criteria being the acceptable solutions listed in column 3 Otherwise - Impact Assessable	■ Acceptable Solutions in section 6.26.4 of the Telecommunications Facility Code ■ Acceptable Solutions in section 8.5.4 of the Development Near Underground Infrastructure Code ■ Acceptable Solutions in section 8.6.4 of the Erosion Prevention and Sediment Control Code ■ Acceptable Solutions A1.(1)(a) and (c) in section 7.6.4 of the Excavation and Fill Code
Temporary Use	Self-Assessable If complying with the assessment criteria being the acceptable solutions listed in column 3 Code Assessable If not self-assessable	■ Acceptable Solutions in section 6.27.4 of the Temporary Use Code ■ Emerging Urban Community Zone Code ■ Temporary Use Code

[4.39] If not self-assessable, a Telecommunication Facility in the Emerging Urban Community Zone is impact assessable.

Emerging Urban Community Zone - Table of Assessment for Material Change of Use of Premises

column 1	column 2	column 3
Use[4.37]	**Level of Assessment[4.38]**	**Assessment Criteria**
Utility Installation	Code Assessable	■ Emerging Urban Community Zone Code ■ Access and Parking Code ■ Development Near Underground Infrastructure Code ■ Erosion Prevention and Sediment Control Code ■ Excavation and Fill Code ■ Landscape Code ■ Stormwater Management Code
Defined uses not listed in column 1	Impact Assessable	
Defined uses listed in column 1 that do not comply with the level of assessment qualifications in column 2	Impact Assessable	
Uses not defined in Part 9 - Schedule 3 - Dictionary, Division 1 - Uses	Impact Assessable	

4.5.5 Emerging Urban Community Zone - Table of Assessment for Other Development not associated with a Material Change of Use of Premises

Emerging Urban Community Zone - Table of Assessment for Other Development

column 1	column 2	column 3
Other Development	**Level of Assessment**[4.40]	**Assessment Criteria**
Reconfiguration for -		
Creating lots by subdividing another lot by Standard Format Plan[4.41]	Impact Assessable	
Creating lots by subdividing another lot by - ■ Building Format Plan; or ■ Volumetric Format Plan	Code Assessable	■ Emerging Urban Community Zone Code ■ Reconfiguration Code
■ Rearranging the boundaries of a lot by registering a plan of subdivision; or ■ Dividing land into parts by Agreement; or ■ Creating an easement giving access to a lot from a constructed road	Code Assessable	■ Reconfiguration Code
Building Work for -		
Communications Structures	Exempt If minor building work[4.42] Self-Assessable If - (1) Not exempt; (2) Complying with the assessment criteria being the acceptable solutions listed in column 3 Code Assessable If not self-assessable	■ Acceptable Solutions in section 7.2.4 of the Communications Structures Code ■ Communications Structures Code

[4.40] See Schedule 3 - Dictionary, Division 2 - Administrative Terms for a definition of level of assessment.
[4.41] Whether or not having a Community Management Statement.
[4.42] See Schedule 3 - Dictionary, Division 2 - Administrative Terms for a definition of minor building work

Emerging Urban Community Zone - Table of Assessment for Other Development

column 1	column 2	column 3
Other Development	**Level of Assessment**[4.40]	**Assessment Criteria**
Domestic Additions	Exempt If minor building work[4.42] Self-Assessable If - (1) Not exempt; (2) Complying with the assessment criteria being the acceptable solutions listed in column 3 **Note -** Non-compliance with the acceptable solutions for self assessable development in relation to setbacks, site cover and built to boundary walls, or nominated "Alternative Provisions" or Building Assessment Provisions identified in the Domestic Additions Code will not elevate the level of assessment of a proposal from self assessable development to assessable development under the Redlands Planning Scheme. Refer to section 7.3.2 of the Domestic Additions Code. Code Assessable If not self-assessable	■ Acceptable Solutions in section 7.3.5 of the Domestic Additions Code ■ Acceptable Solutions in section 8.5.4 of the Development Near Underground Infrastructure Code ■ Acceptable Solutions in section 8.6.4 of the Erosion Prevention and Sediment Control Code ■ Acceptable Solutions A1.(1)(a) and(c) in section 7.6.4 of the Excavation and Fill Code ■ Emerging Urban Community Zone Code ■ Domestic Additions Code ■ Development Near Underground Infrastructure Code ■ Erosion Prevention and Sediment Control Code ■ Excavation and Fill Code ■ Infrastructure Works Code ■ Stormwater Management Code
Domestic Outbuilding	Exempt If minor building work[4.42] Self-Assessable If - (1) Not exempt; (2) Complying with the assessment criteria being the acceptable solutions listed in column 3	■ Acceptable Solutions in section 7.5.5 of the Domestic Outbuilding Code ■ Acceptable Solutions in section 8.5.4 of the Development Near Underground Infrastructure Code ■ Acceptable Solutions in section 8.6.4 of the Erosion Prevention and Sediment Control Code ■ Acceptable Solutions A1(1)(a) and(c) in section 7.6.4 of the Excavation and Fill Code

Emerging Urban Community Zone - Table of Assessment for Other Development

column 1	column 2	column 3
Other Development	**Level of Assessment**[4.40]	**Assessment Criteria**
	Note - Non-compliance with the acceptable solutions for self assessable development in relation to setbacks, site cover and built to boundary walls, or nominated "Alternative Provisions" or Building Assessment Provisions identified in the Domestic Outbuilding Code will not elevate the level of assessment of a proposal from self assessable development to assessable development under the Redlands Planning Scheme. Refer to section 7.5.2 of the Domestic Outbuilding Code. Code Assessable If not self-assessable	■ Emerging Urban Community Zone Code ■ Domestic Outbuilding Code ■ Development Near Underground Infrastructure Code ■ Erosion Prevention and Sediment Control Code ■ Excavation and Fill Code
On-site raising or relocation of an existing dwelling unit	Self-Assessable If complying with the assessment criteria being the acceptable solutions listed in column 3 **Note -** Non-compliance with the acceptable solutions for self assessable development in relation to setbacks, site cover and built to boundary walls, or nominated "Alternative Provisions" or Building Assessment Provisions identified in the On-site Raising or Relocation Code will not elevate the level of assessment of a proposal from self assessable development to assessable development under the Redlands Planning Scheme. Refer to section 7.7.2 of the On-site Raising or Relocation Code.	■ Acceptable Solutions in section 7.7.5 of the On-Site Raising or Relocation Code ■ Acceptable Solutions in section 8.5.4 of the Development Near Underground Infrastructure Code ■ Acceptable Solutions in section 8.6.4 of the Erosion Prevention and Sediment Control Code ■ Acceptable Solutions A1.(1)(a) and(c) in section 7.6.4 of the Excavation and Fill Code

Emerging Urban Community Zone - Table of Assessment for Other Development

column 1	column 2	column 3
Other Development	**Level of Assessment**[4.40]	**Assessment Criteria**
	Code Assessable If not self-assessable	■ Emerging Urban Community Zone Code ■ On-Site Raising and Relocation Code ■ Development Near Underground Infrastructure Code ■ Erosion Prevention and Sediment Control Code ■ Excavation and Fill Code ■ Infrastructure Works Code ■ Stormwater Management Code
Private Swimming Pool	Self-Assessable If complying with the assessment criteria being the acceptable solutions listed in column 3 **Note -** Non-compliance with the acceptable solutions for self assessable development in relation to setbacks, and access and parking, or nominated "Alternative Provisions" or Building Assessment Provisions identified in the Private Swimming Pool Code will not elevate the level of assessment of a proposal from self assessable development to assessable development under the Redlands Planning Scheme. Refer to section 7.8.2 of the Private Swimming Pool Code. Code Assessable If not self-assessable	■ Acceptable Solutions in section 7.8.5 of the Private Swimming Pool Code. ■ Private Swimming Pool Code ■ Development Near Underground Infrastructure Code ■ Erosion Prevention and Sediment Control Code ■ Excavation and Fill Code
Private Tennis Court	Self-Assessable If complying with the assessment criteria being the acceptable solutions listed in column 3 Code Assessable If not self-assessable	■ Acceptable Solutions in section 7.9.4 of the Private Tennis Court Code ■ Private Tennis Court Code ■ Erosion Prevention and Sediment Control Code ■ Excavation and Fill Code ■ Landscape Code

Emerging Urban Community Zone - Table of Assessment for Other Development

column 1	column 2	column 3
Other Development	**Level of Assessment**[4.40]	**Assessment Criteria**
Operational Work for -		
Constructing a Domestic Driveway Crossover	Self-Assessable If complying with the assessment criteria being the acceptable solutions listed in column 3 Code Assessable If not self-assessable	■ Acceptable Solutions in section 7.4.4 of the Domestic Driveway Crossover Code ■ Domestic Driveway Crossover Code
Excavation and Fill	Exempt If - (1) Disturbing less than 50m^3 of soil; (2) A height/depth not exceeding 300mm measured from ground level Self-Assessable If - (1) Not exempt; (2) Complying with the assessment criteria being the acceptable solutions listed in column 3 Code Assessable If not self-assessable	■ Acceptable solution in Section 8.6.4 of the Erosion Prevention and Sediment Control Code ■ Acceptable Solutions A1.(1)(b),(c),(d) in section 7.6.4 of the Excavation and Fill Code ■ Erosion Prevention and Sediment Control Code ■ Excavation and Fill Code
Placing an Advertising Device on Premises	Self-Assessable If complying with the assessment criteria being the acceptable solutions listed in column 3 Code Assessable If not self-assessable	■ Acceptable Solutions in section 7.1.4 of the Advertising Devices Code ■ Advertising Devices Code
Operational Work for Reconfiguring a Lot (by Standard Format Plan)	Code Assessable	■ Reconfiguration Code ■ Development Near Underground Infrastructure Code ■ Erosion Prevention and Sediment Control Code ■ Excavation and Fill Code ■ Infrastructure Works Code ■ Landscape Code ■ Stormwater Management Code

Emerging Urban Community Zone - Table of Assessment for Other Development

column 1	column 2	column 3
Other Development	**Level of Assessment**[4.40]	**Assessment Criteria**
Private Waterfront Structures	Code Assessable	■ Private Waterfront Structure Code ■ Development Near Underground Infrastructure Code ■ Erosion Prevention and Sediment Control Code ■ Excavation and Fill Code
All other development not listed in column 1	Exempt	

4.5.6 Compliance with Emerging Urban Community Zone Code

(1) Development that is consistent with the specific outcomes in section 4.5.7 complies with the Emerging Urban Community Zone Code.

Note -

The following planning scheme policies will assist in achieving specific outcomes within the Emerging Urban Community Zone Code -

- Planning Scheme Policy 2 - Community Consultation;
- Planning Scheme Policy 4 - Ecological Impacts;
- Planning Scheme Policy 5 - Environmental Emissions;
- Planning Scheme Policy 6 – Emerging Urban Community Structure Plans;
- Planning Scheme Policy 9 - Infrastructure Works;
- Planning Scheme Policy 11 - Rural Lands and Uses.

4.5.7 Overall Outcomes for Emerging Urban Community Zone

(1) The overall outcomes are the purpose of the Emerging Urban Community Zone Code.

Note –

- The zone contains land located throughout the City that is generally considered suitable for future urban development purposes within the life of the planning scheme.
- Until such time as a Structure Plan and an amendment to the Redlands Planning Scheme is completed and approved by Redland City Council and where necessary the Regional Planning Minister, only a limited range of uses may be undertaken.
- Land within the zone located at Kinross Road, Thornlands will be investigated as part of the required structure planning process to determine its suitability or otherwise to accommodate higher order educational facilities.
- Structure Plans for each area of land included in the zone will be progressively undertaken in accordance with identified need and the outcomes of the Local Growth Management Strategy.
- Each Structure Plan will be prepared and managed by Redland City Council in accordance with Planning Scheme Policy 6 - Emerging Urban Community Structure Plan and State Government Guidelines and will be conducted in partnership with landowners, key stakeholders and the community.
- Each Structure Plan will ensure future development -
  - contains acceptable urban uses;
  - is designed to incorporate best practice sustainable principles, ensuring demand for water, energy and waste are minimised and maximum advantage is taken of all reuse opportunities;
  - achieves dwelling densities which maximise yields;
  - achieves land use and transport integrity;
  - connects with surrounding areas;
  - concentrates a mix of higher residential density and commercial intensities around existing or future public transport modes;
  - creates balanced and affordable communities with a clearly defined range and mix of house type and price;
  - has the capacity to be serviced by physical and social infrastructure which can be staged economically to meet the demand;
  - identifies and presents infrastructure corridors;
  - identifies sites and make provision for community uses and public services, including education, health, social and emergency services;
  - takes place in an appropriate sequence with any out-of-sequence or bring forward costs met by the developments;
  - responds to development constraints, including identifying and protecting significant nature conservation and other environmental values and mitigates undesirable impacts;
  - makes provision for local job opportunities and economical activity areas;
  - provides for and supports the use of internal and external public transport, walking and cycling;
  - makes available up to date communication technology to all dwellings and businesses;
  - provides for open space within the area and inter-urban breaks where required.

(2) The overall outcomes sought for the Emerging Urban Community Zone Code are described by five key characteristics[4.43] -

(a) Uses and Other Development
(b) Built Form and Density
(c) Amenity
(d) Environment
(e) Infrastructure

Each of these is detailed below.

(a) Uses and Other Development

(i) Provide for a limited range of uses that -
a. maintain the current low-intensity and open character of the land;
b. provide for a semi-rural lifestyle with detached housing on existing individual lots.

(ii) Restrict other forms of development, including reconfiguration, until such time as the suitability of the land for urban purposes is established.

(b) Built Form and Density

(i) The scale of uses and other development contributes positively to the maintenance of a semi-rural landscape setting by -
a. limiting building height to maintain a low-rise appearance;
b. protecting the open landscape setting;
c. buildings have recognisable elements in relation to siting, width, depth and bulk that are consistent with lot size and the semi rural landscape setting.

(ii) The density of uses and other development are characterised by a predominance of land being used for semi-rural purposes and associated structures on large lots.

(iii) Buildings incorporate a mix of materials that are responsive to local conditions and styles.

(c) Amenity

(i) Uses and other development achieve a high standard of semi-rural amenity by -
a. protecting and enhancing places of cultural significance or landscape value;
b. having access to natural light and ventilation, privacy and private open space commensurate with the use;
c. providing a landscape setting that complements the semi-rural nature of development;
d. mitigating impacts associated with light, noise, air and traffic to a level commensurate to a semi-rural environment;

(ii) Uses are compatible with the maintenance of a high standard of semi-rural amenity that is characterised by -
a. the retention of scenic landscapes and vistas;
b. productive rural lands;
c. native plants and waterways;
d. buildings and other structures minimising visual impacts on the semi rural landscape setting.

(d) Environment

(i) Uses and other development minimise adverse impacts on environmental and scenic values by -
a. responding to topographical features;
b. minimising the need for excavation and fill;
c. protecting the site from erosion;
d. maximising the retention of native plants;

[443] In combination, the overall outcomes in section 4.5.7 (2)(a)-(e) define the character of the Emerging Urban Community Zone.

e. maximising the use of planting species that are native and characteristic to the area;
f. protecting, managing and enhancing environmental corridors;
g. incorporating best practice stormwater management and enhancing water quality.

(e) Infrastructure

(i) Uses and other development -
a. make efficient use of existing infrastructure;
b. provide for the extension of infrastructure in an orderly and cost effective manner;
c. do not result in unacceptable risk to community infrastructure.

(ii) Uses and other development are serviced by infrastructure including -
a. reticulated water or adequate potable water supply;
b. reticulated sewerage; or
c. where the site is not able to connect to a reticulated sewerage system, wastewater is treated and disposed of on-site subject to site, soil and locational constraints;
d. constructed roads that are low-impact and that provide all weather access;
e. stormwater management;
f. energy;
g. telecommunications;
h. waste and recycling collection.

4.5.8 Specific Outcomes and Probable Solutions applicable to Assessable Development

Assessable Development			
Specific Outcomes		**Probable Solutions**	
	Uses and Other Development -		
S1.1	Uses and other development identified as inconsistent in Table 1 are not established or undertaken in the zone.	**P1.1**	No probable solution identified.
S1.2	(1) Uses and other development do not compromise the future land use potential or patterns of development of this land by - (a) contaminating land; (b) having an adverse impact on scenic values; (c) compromising future transport and public utility networks/corridors.	**P1.2**	(1) No probable solution identified. **Note -** For additional assessment criteria refer to Part 6 - ■ Division 2 - Agriculture; ■ Division 5 - Bed and Breakfast; ■ Division 11 - Dwelling House; ■ Division 22 - Roadside Stall; or any other relevant Use Code.
S1.3	Reconfiguration does not result in the fragmentation of land and creation of additional lots.	**P1.3**	No probable solution identified.
	Built Form and Density -		
S2.1	(1) The height, scale and density of the use is consistent with the maintenance of a semi-rural landscape setting in relation to - (a) height; (b) setback; (c) site coverage.	**P2.1**	(1) Buildings and structures - (a) do not exceed 8.5 metres above ground level; (b) are setback - (i) for a lot or premises less than 2 hectares - a minimum of 10 metres from all boundaries; or (ii) for a lot or premises greater than 2 hectares - a. a minimum of 20 metres from all boundaries; or b. a minimum of 10 metres from all boundaries if screened by planted landscaping; (c) site coverage does not exceed 10 percent of the area of the site.
S2.2	Non-residential buildings or structures are demountable and capable of being removed from the site.	**P2.2**	No probable solution identified.

Assessable Development			
Specific Outcomes		**Probable Solutions**	
S2.3	(1) Residential building design incorporates architectural elements that - (a) exhibit a high degree of interest through the use of colour, angles and materials; (b) include verandahs, decks, eaves, window hoods or similar elements to create shade and cast shadow; (c) promote an attractive semi-rural landscape setting; (d) provide interesting and attractive facades that contribute to the semi-rural setting and the experience of passers-by; (2) Other uses have a functional built form typical of a semi-rural environment.	**P2.3**	(1) No probable solution identified; (2) No probable solution identified.
	Amenity -		
S3.1	Uses and other development do not adversely impact on the cultural heritage values of a registered heritage place(s).	**P3.1**	No probable solution identified.
S3.2	(1) Artificial lighting does not result in unreasonable disturbance to any person or activity; (2) Glare and reflection from the sun are minimised through material and glazing choice.	**P3.2**	(1) No probable solution identified; (2) No probable solution identified.
S3.3	(1) Noise generated by the use or other development is compatible with that experienced in a semi-rural environment.	**P3.3**	(1) Noise emissions comply with following - (a) the use or other development does not generate noise, measured as the $L_{Amax,adj,T}$ parameter, at the boundary of the lot or premises, greater than - (i) 5dB(A) above background noise level between 7am to 10pm; or (ii) 3dB(A) above background noise level between 10pm to 7am; or (b) for agricultural or other productive rural activities - Table 2 - Noise levels at the boundary of the lot or premises; or (c) for an Environmentally Relevant Activity - any approval issued under the *Environmental Protection Act 1994*.

Assessable Development			
Specific Outcomes		**Probable Solutions**	
			Note - The $L_{Amax,adj,T}$ parameter is defined in the Noise Measurement Manual (*Environmental Protection Agency, 2000*).
S3.4	Air quality impacts are eliminated or mitigated to a level that is compatible with a semi rural environment.	**P3.4**	No probable solution identified. **Note -** Refer to Part 11 – Planning Scheme Policy 5 – Environmental Emissions for further information on noise and air quality impacts.
S3.5	Traffic movements are compatible with that experienced in a semi-rural environment.	**P3.5**	No probable solution identified.
S3.6	(1) Buildings, uses and other development are sited to - (a) minimise visual impacts on the semi-rural landscape setting; (b) protect native plants and waterways; (c) not compromise the future land use potential or patterns of development.	**P3.6**	(1) No probable solution identified.
	Environment -		
S4.1	(1) Protect the environment from impacts associated with the use or other development including - (a) stormwater run-off; (b) water quality; (c) erosion and sediment run-off; (d) weed infestation.	**P4.1**	(1) No probable solution identified.
S4.2	(1) Minimise the need for excavation and fill by uses and other development being located and designed to - (a) prevent the unnecessary removal of native plants; (b) protect overland drainage flows; (c) reduce erosion and sediment run-off; (d) protect the amenity of adjoining properties and future land uses; (e) not impede the movement of native animals.	**P4.2**	(1) No probable solution identified. **Note -** Refer to Part 8 - Division 7 - Infrastructure Works for specific assessment criteria.
S4.3	(1) Landscaping and revegetation - (a) incorporates plants that are native to the local area;	**P4.3**	(1) Species used for landscaping and revegetation are selected from the native plants listed in Part 9 -

Assessable Development			
Specific Outcomes		**Probable Solutions**	
	(b) recognises and enhances the semi-rural landscape setting; (c) supports the retention and rehabilitation of enhancement areas and corridors, (d) maximises use of permeable surfaces and landscaping to reduce stormwater run-off; (e) incorporates landscaping as a component of the stormwater management system.		(a) Schedule 10 - Vegetation Species List; (b) Schedule 9 - Street Trees where within the road reserve. **Note -** For additional assessment criteria, refer to Part 8 - ■ Division 8 - Landscape Code; ■ Division 9 - Stormwater Management Code.
	Infrastructure -		
S5.1	(1) Uses and other development are provided with - (a) reticulated water; or (b) an adequate potable water supply where the site is not able to be serviced by reticulated water.	**P5.1**	(1) Where connection to a reticulated water supply system is not available, development is provided with potable water supply capacity of at least 20,000 litres per equivalent dwelling unit.
S5.2	(1) Uses and other development are provided with - (a) reticulated sewerage; or (b) where the site is not able to be connected to a reticulated sewerage system, wastewater - (i) is treated and disposed of on-site subject to site, soil and locational constraints; (ii) reduces the potential for - a. contaminating groundwater, surface water or wetland environments; b. risks to reticulated water supply or public health; (c) stormwater management systems that - (i) utilise existing overland systems; (ii) incorporate measures to reduce stormwater run-off quantity and improve stormwater quality; (d) constructed road access that minimise removal of native plants and the concentration of stormwater run-off; (e) energy; (f) telecommunications; (g) waste and recycling collection facilities.	**P5.2**	(1) No probable solution identified.

Assessable Development			
Specific Outcomes		**Probable Solutions**	
S5.3	(1) Waste and recycling is managed to minimise impacts on the environment and nearby premises by - (a) locating waste and recycling storage areas to protect amenity and to provide safe manual handling of containers; (b) screening waste and recycling container storage areas from view; (c) providing for the cleansing of containers in a manner that does not cause adverse environmental impacts; (2) Uses and other development - (a) provide safe and efficient manoeuvring for waste collection vehicles; (b) ensure all bulk waste and recycling containers are serviced off-street and not on roads with public access; (c) ensure sufficient vertical clearance for container servicing; (d) ensure unobstructed access to containers by collection vehicles; (3) Waste and recycling storage is designed and located to - (a) provide adequate container volume to contain the waste and recyclables; (b) provide recycle containers in an equivalent or greater volume to waste containers; (c) provide a dedicated waste and recycling container storage area that is convenient and safe to use; (d) ensure containers are located on impermeable surfaces.	**P5.3**	(1) No probable solution identified. (2) No probable solution identified. (3) No probable solution identified. **Note -** Refer to Part 11 - Planning Scheme Policy 9 - Infrastructure Works – Chapter 16 – Waste Management for further information on waste and recycling container volume, storage, servicing, screening and cleansing. Refer to Part 8 - Division 1 - Access and Parking Code for waste collection vehicle servicing and manoeuvring assessment criteria.
S5.4	Community infrastructure is able to function effectively during and immediately after flood events.	**P5.4**	Community infrastructure is located at or above the recommended flood levels in Table 3 - Recommended Flood Levels for Community Infrastructure.

Table 1 - Inconsistent Uses and Other Development

Inconsistent Uses
Aged Persons and Special Needs Housing
Airport
Apartment Building
Brothel
Bulky Goods Showroom
Car Wash Facility
Cemetery
Child Care Centre
Commercial Office
Display and Sale Activity
Drive Through Restaurant
Dual Occupancy
Education Facility
Extractive Industry
Forestry
Funeral Parlour
General Industry
Health Care Centre
Heavy Industry
High Impact Industry
Hospital
Hotel
Indoor Recreation Facility
Institution
Intensive Agriculture
Marine Services
Mobile Home Park
Multiple Dwelling
Night Club
Outdoor Dining
Outdoor Recreation Facility
Passenger Terminal
Place of Worship
Refreshment Establishment
Retail Warehouse
Service Industry
Service Station
Shop
Small Lot House
Tourist Park
Vehicle Depot
Vehicle Parking Station
Vehicle Repair Premises
Veterinary Surgery
Warehouse
Inconsistent Other Development
Creating lots by subdividing another lot by a Standard Format Plan (whether or not having a Community Management Statement)

Table 2 - Noise levels at the boundary of the lot or premises for agricultural or other productive rural uses

Period	Noise level at the boundary of the lot or premises[1]
7am - 10pm	Background noise level plus 8 dB(A)
10pm - 7am	Background noise level plus 5 dB(A)

Note[1] - Measured as the adjusted maximum sound pressure level $L_{Amax,adj,T}$. as defined in the *Noise Measurement Manual* (Environmental Protection Agency, 2000)

Table 3 - Recommended Flood Levels for Community Infrastructure

Type of Community Infrastructure	Recommended Flood Level AEP (ARI)
Emergency services, other than police facilities	0.2% (1 in 500 year ARI)
Emergency shelters	0.5% (1 in 200 year ARI)
Police facilities	0.5% (1 in 200 year ARI)
Hospitals and associated facilities	0.2% (1 in 500 year ARI)
Stores of valuable records or items of historic or cultural significance such as galleries and libraries	0.5% (1 in 200 year ARI)
Power stations	0.2% (1 in 500 year ARI)
Major switch yards	0.2% (1 in 500 year ARI)
Substations	0.5% (1 in 200 year ARI)
Sewerage treatment plants	1% (1 in 100 year ARI)
Water treatment plants	0.5% (1 in 200 year ARI)
▪ State-controlled roads ▪ Works of an electricity entity not otherwise listed in this table ▪ Railway lines, stations and associated facilities ▪ Aviation facilities ▪ Communication network facilities	No specific recommended flood level but development proponents should ensure that the infrastructure is optimally located and designed to achieve suitable levels of service, having regard to the processes and policies of the administering government agency.

Reference **-** *State Planning Policy Guideline 1/03: Mitigating the Adverse Impacts of Flood, Bushfire and Landslide.*

Division 6 - Environmental Protection Zone

4.6.1 Introduction

(1) This division contains the provisions for the Environmental Protection Zone. They are -

(a) The Environmental Protection Zone Tables of Assessment, that incorporates -
- (i) Levels of assessment for development in the Environmental Protection Zone (section 4.6.2);
- (ii) Assessment criteria for development in the Environmental Protection Zone (section 4.6.3);
- (iii) Environmental Protection Zone - Table of Assessment for Material Change of Use of Premises (section 4.6.4);
- (iv) Environmental Protection Zone - Table of Assessment for Other Development not associated with a Material Change of Use of Premises (section 4.6.5).

(b) The Environmental Protection Zone Code, that incorporates -
- (i) Compliance with the Environmental Protection Zone Code (section 4.6.6);
- (ii) Overall Outcomes for the Environmental Protection Zone Code (section 4.6.7);
- (iii) Specific Outcomes and Probable Solutions applicable to Assessable Development (section 4.6.8).

4.6.2 Levels of assessment for development in the Environmental Protection Zone

(2) Sections 4.6.4 and 4.6.5 identify the level of assessment for development in the Environmental Protection Zone, as follows -

(a) section 4.6.4 Environmental Protection Zone - Table of Assessment for Making a Material Change of Use of Premises[4.44] -
- (i) column 1 identifies uses that are exempt, self-assessable or assessable;
- (ii) column 2 identifies the level of assessment for the uses listed in column 1;
- (iii) the use is impact assessable where -
  - a. it is defined in Part 9 - Schedule 3 - Dictionary, Division 1 - Uses and is not listed in column 1; or
  - b. it is listed in column 1 and does not comply with the level of assessment qualifications listed in column 2; or
  - c. it is not defined in Part 9 - Schedule 3 - Dictionary, Division 1 - Uses.

(b) section 4.6.5 Environmental Protection Zone - Table of Assessment for Other Development not associated with a Material Change of Use of Premises -
- (i) column 1 identifies other development that is exempt, self-assessable or assessable;
- (ii) column 2 identifies the level of assessment for other development listed in column 1;
- (iii) where the other development is not listed in column 1 it is exempt.

(3) Overlays may alter the level of assessment identified in (1)(a) and (b)[4.45].

[4.44] Works associated with an application for a material change of use of premises may be assessed together with the material change of use.

[4.45] Refer to Part 5 - Overlays to determine the level of assessment for the use or other development where an Overlay affects the lot and Part 1, section 1.2.5(10)(f) that explains how the highest level of assessment applies.

4.6.3 Assessment criteria for development in the Environmental Protection Zone

(4) Development in the Environmental Protection Zone is assessed against the assessment criteria listed in column 3 of sections 4.6.4 and 4.6.5, as follows -

(a) acceptable solutions of applicable codes for self-assessable development; or

(b) applicable codes for code assessable development.

(5) Self-assessable development that does not comply with all the acceptable solutions of the applicable codes is assessable development. Non compliance with only the acceptable solutions for self-assessable development in relation to setbacks and site cover under the QDC or nominated "Alternative Provisions" or Building Assessment Provisions will not elevate the level of assessment of a proposal from self assessable development to assessable development under the Redlands Planning Scheme. In these instances, the local government will undertake the functions of a referral agency with Concurrence Agency jurisdiction under IPA to assess and determine these matters.

(6) Impact assessable development will be assessed against all relevant provisions of the Redlands Planning Scheme.

Note –

- The level of assessment indicated within section 4.6.4 - Environmental Protection Zone - Table of Assessment for Material Change of Use of Premises may be affected by Division 2 of the Regulatory Provisions of the *SEQ Regional Plan 2005-2026.*
- The level of assessment for reconfiguration as indicated within section 4.6.5 - Environmental Protection Zone - Table of Assessment for Other Development not associated with a Material Change of Use of Premises, where within the Regional Landscape and Rural Production Area or Investigation Area of the *SEQ Regional Plan 2005-2026* -
  - complies with Division 3 of the Regulatory Provisions;
  - has a minimum lot size of 100 hectares, unless the subdivision meets an exclusion documented in Division 3.

4.6.4 Environmental Protection Zone - Table of Assessment for Material Change of Use of Premises

Environmental Protection Zone - Table of Assessment for Material Change of Use of Premises

column 1	column 2	column 3
Use[4.46]	**Level of Assessment**[4.47]	**Assessment Criteria**
Bed and Breakfast	Code Assessable	■ Environmental Protection Zone Code ■ Bed and Breakfast Code ■ Infrastructure Works Code ■ Landscape Code
Display Dwelling	Code Assessable	■ Environmental Protection Zone Code ■ Display Dwelling Code
Dwelling House	Code Assessable	■ Environmental Protection Zone Code ■ Dwelling House Code ■ Development Near Underground Infrastructure Code ■ Domestic Driveway Crossover Code ■ Erosion Prevention and Sediment Control Code ■ Excavation and Fill Code ■ Infrastructure Works Code ■ Stormwater Management Code
Home Business	Self-Assessable If complying with the assessment criteria being the acceptable solutions listed in column 3 Code Assessable If not self-assessable	■ Acceptable Solutions in section 6.15.4 of the Home Business Code ■ Environmental Protection Zone Code ■ Home Business Code ■ Access and Parking Code And where being carried out in a Domestic Outbuilding - ■ Domestic Outbuilding Code ■ Development Near Underground Infrastructure Code ■ Erosion Prevention and Sediment Control Code ■ Excavation and Fill Code

[4.46] See Part 9 - Schedule 3 - Dictionary, Division 1 - Uses.
[4.47] See Part 9 - Schedule 3 - Dictionary, Division 2 - Administrative Terms for a definition of level of assessment.

Environmental Protection Zone - Table of Assessment for Material Change of Use of Premises

column 1	column 2	column 3
Use[4.46]	**Level of Assessment**[4.47]	**Assessment Criteria**
Minor Utility	Exempt	
Park	Self-Assessable If - (1) Being undertaken by the local government; (2) On land in the ownership or control of the local government; (3) Complying with the assessment criteria being the acceptable solutions listed in column 3 Code Assessable If not self-assessable	■ Acceptable Solutions in section 6.20.4 of the Park Code ■ Acceptable Solutions in section 8.5.4 of the Development Near Underground Infrastructure Code ■ Environmental Protection Zone Code ■ Park Code ■ Access and Parking Code ■ Development Near Underground Infrastructure Code ■ Infrastructure Works Code ■ Landscape Code ■ Stormwater Management Code
Relatives Apartment	Self-Assessable If complying with the assessment criteria being the acceptable solutions listed in column 3 Code Assessable If not self-assessable	■ Acceptable Solutions in section 6.21.4 of Relatives Apartment Code ■ Acceptable Solutions in section 8.5.4 of the Development Near Underground Infrastructure Code ■ Acceptable Solutions in section 8.6.4 of the Erosion Prevention and Sediment Control Code ■ Acceptable Solutions A1.(1)(a) and (c) in section 7.6.4 of the Excavation and Fill Code ■ Environmental Protection Zone Code ■ Relatives Apartment Code ■ Development Near Underground Infrastructure Code ■ Erosion Prevention and Sediment Control Code ■ Excavation and Fill Code ■ Stormwater Management Code
Road	Exempt	

Environmental Protection Zone - Table of Assessment for Material Change of Use of Premises

column 1	column 2	column 3
Use[4.46]	**Level of Assessment**[4.47]	**Assessment Criteria**
Roadside Stall	Code Assessable	■ Environmental Protection Zone Code ■ Roadside Stall Code ■ Access and Parking Code ■ Development Near Underground Infrastructure Code ■ Infrastructure Works Code
Telecommunications Facility	Self-Assessable[4.48] If complying with the assessment criteria being the acceptable solutions listed in column 3 Otherwise - Impact Assessable	■ Acceptable Solutions in section 6.26.4 of the Telecommunications Facility Code ■ Acceptable Solutions in section 8.5.4 of the Development Near Underground Infrastructure Code ■ Acceptable Solutions in section 8.6.4 of the Erosion Prevention and Sediment Control Code ■ Acceptable Solutions A1(1)(a) and (c) in section 7.6.4 of the Excavation and Fill Code
Temporary Use	Self-Assessable If complying with the assessment criteria being the acceptable solutions listed in column 3 Code Assessable If not self-assessable	■ Acceptable Solutions in section 6.27.4 of the Temporary Use Code ■ Environmental Protection Zone Code ■ Temporary Use Code
Utility Installation	Code Assessable	■ Environmental Protection Zone Code ■ Access and Parking Code ■ Development Near Underground Infrastructure Code ■ Erosion Prevention and Sediment Control Code ■ Excavation and Fill Code ■ Landscape Code ■ Stormwater Management Code
Defined uses not listed in column 1	Impact Assessable	

[4.48] If not self-assessable, a Telecommunication Facility in the Environmental Protection Zone is impact assessable.

Environmental Protection Zone - Table of Assessment for Material Change of Use of Premises

column 1	column 2	column 3
Use[4.46]	Level of Assessment[4.47]	Assessment Criteria
Defined uses listed in column 1 that do not comply with the level of assessment qualifications in column 2	Impact Assessable	
Uses not defined in Part 9 - Schedule 3 - Dictionary, Division 1 - Uses	Impact Assessable	

Environmental Protection Zone

4.6.5 Environmental Protection Zone - Table of Assessment for Other Development not associated with a Material Change of Use of Premises

Environmental Protection Zone - Table of Assessment for Other Development

column 1	column 2	column 3
Other Development	**Level of Assessment**[4.49]	**Assessment Criteria**
Reconfiguration for -		
Creating lots by subdividing another lot by Standard Format Plan[4.50]	Code Assessable	■ Environmental Protection Zone Code ■ Reconfiguration Code ■ Development Near Underground Infrastructure Code ■ Excavation and Fill Code ■ Infrastructure Works Code ■ Stormwater Management Code
Creating lots by subdividing another lot by - ■ Building Format Plan; or ■ Volumetric Format Plan	Code Assessable	■ Environmental Protection Zone Code ■ Reconfiguration Code
■ Rearranging the boundaries of a lot by registering a plan of subdivision; or ■ Dividing land into parts by Agreement; or ■ Creating an easement giving access to a lot from a constructed road	Code Assessable	■ Reconfiguration Code
Building Work for -		
Communications Structures	Exempt If minor building work[4.51] Self-Assessable If - (4) Not exempt; (5) Complying with the assessment criteria being the acceptable solutions listed in column 3 Code Assessable If not self-assessable	■ Acceptable Solutions in section 7.2.4 of the Communications Structures Code ■ Communications Structures Code

[4.49] See Part 9 - Schedule 3 - Dictionary, Division 2 - Administrative Terms for a definition of level of assessment.
[4.50] Whether or not having a Community Management Statement.
[4.51] See Part 9 - Schedule 3 - Dictionary, Division 2 - Administrative Terms for a definition of minor building work.

Environmental Protection Zone

Environmental Protection Zone - Table of Assessment for Other Development

column 1	column 2	column 3
Other Development	**Level of Assessment**[4.49]	**Assessment Criteria**
Domestic Additions	Exempt If minor building work[4.Error! Bookmark not defined.] Self-Assessable If - (1) Not exempt; (2) Complying with the assessment criteria being the acceptable solutions listed in column 3 **Note -** Non-compliance with the acceptable solutions for self assessable development in relation to setbacks, site cover and built to boundary walls, or nominated "Alternative Provisions" or Building Assessment Provisions identified in the Domestic Additions Code will not elevate the level of assessment of a proposal from self assessable development to assessable development under the Redlands Planning Scheme. Refer to section 7.3.2 of the Domestic Additions Code. Code Assessable If not self-assessable	■ Acceptable Solutions in section 7.3.5 of the Domestic Additions Code ■ Acceptable Solutions in section 8.5.4 of the Development Near Underground Infrastructure Code ■ Acceptable Solutions in section 8.6.4 of the Erosion Prevention and Sediment Control Code ■ Acceptable Solutions A1.(1)(a) and (c) in section 7.6.4 of the Excavation and Fill Code ■ Environmental Protection Zone Code ■ Domestic Additions Code ■ Development Near Underground Infrastructure Code ■ Erosion Prevention and Sediment Control Code ■ Excavation and Fill Code ■ Infrastructure Works Code ■ Stormwater Management Code
Domestic Outbuilding	Exempt If minor building work[4.Error! Bookmark not defined.] Self-Assessable If - (1) Not exempt; (2) Complying with the assessment criteria being the acceptable solutions listed in column 3	■ Acceptable Solutions in section 7.5.5 of the Domestic Outbuilding Code ■ Acceptable Solutions in section 8.5.4 of the Development Near Underground Infrastructure Code ■ Acceptable Solutions in section 8.6.4 of the Erosion Prevention and Sediment Control Code ■ Acceptable Solutions A1.(1)(a) and (c) in section 7.6.4 of the Excavation and Fill Code

Environmental Protection Zone - Table of Assessment for Other Development

column 1	column 2	column 3
Other Development	**Level of Assessment**[4.49]	**Assessment Criteria**
	Note - Non-compliance with the acceptable solutions for self assessable development in relation to setbacks, site cover and built to boundary walls, or nominated "Alternative Provisions" or Building Assessment Provisions identified in the Domestic Outbuilding code will not elevate the level of assessment of a proposal from self assessable development to assessable development under the Redlands Planning Scheme. Refer to section 7.5.2 of the Domestic Outbuilding Code. Code Assessable If not self-assessable	■ Environmental Protection Zone Code ■ Domestic Outbuilding Code ■ Development Near Underground Infrastructure Code ■ Erosion Prevention and Sediment Control Code ■ Excavation and Fill Code
On-site raising or relocation of an existing dwelling unit	Self-Assessable If complying with the assessment criteria being the acceptable solutions listed in column 3 **Note -** Non-compliance with the acceptable solutions for self assessable development in relation to setbacks, site cover and built to boundary walls, or nominated "Alternative Provisions" or Building Assessment Provisions identified in the On-site Raising or Relocation Code will not elevate the level of assessment of a proposal from self assessable to assessable development under the Redlands Planning Scheme. Refer to section 7.7.2 of the On-site Raising or Relocation Code.	■ Acceptable Solutions in section 7.7.5 of the On-Site Raising or Relocation Code ■ Acceptable Solutions in section 8.5.4 of the Development Near Underground Infrastructure Code ■ Acceptable Solutions in section 8.6.4 of the Erosion Prevention and Sediment Control Code ■ Acceptable Solutions A1.(1)(a) and (c) in section 7.6.4 of the Excavation and Fill Code

Environmental Protection Zone - Table of Assessment for Other Development

column 1	column 2	column 3
Other Development	**Level of Assessment**[4.49]	**Assessment Criteria**
	Code Assessable If not self-assessable	■ Environmental Protection Zone Code ■ On-Site Raising and Relocation Code ■ Development Near Underground Infrastructure Code ■ Erosion Prevention and Sediment Control Code ■ Excavation and Fill Code ■ Infrastructure Works Code ■ Stormwater Management Code
Private Swimming Pool	Self-Assessable If complying with the assessment criteria being the acceptable solutions listed in column 3. **Note -** Non-compliance with the acceptable solutions for self assessable development in relation to setbacks, and access and parking, or nominated "Alterative Provisions" or Building Assessment Provisions identified in the Private Swimming Pool Code will not elevate the level of assessment of a proposal from self assessable development to assessable development under the Redlands Planning Scheme. Refer to section 7.8.2 of the Private Swimming Pool Code. Code Assessable If not self-assessable	■ Acceptable Solutions in section 7.8.5 of the Private Swimming Pool Code ■ Private Swimming Pool Code ■ Development Near Underground Infrastructure Code ■ Erosion Prevention and Sediment Control Code ■ Excavation and Fill Code
Private Tennis Court	Self-Assessable If complying with the assessment criteria being the acceptable solutions listed in column 3 Code Assessable If not self-assessable	■ Acceptable Solutions in section 7.9.4 of the Private Tennis Court Code ■ Private Tennis Court Code ■ Erosion Prevention and Sediment Control Code ■ Excavation and Fill Code ■ Landscape Code

Environmental Protection Zone - Table of Assessment for Other Development

column 1	column 2	column 3
Other Development	**Level of Assessment[4.49]**	**Assessment Criteria**
Operational Work for -		
Constructing a Domestic Driveway Crossover	Self-Assessable If complying with the assessment criteria being the acceptable solutions listed in column 3 Code Assessable If not self-assessable	■ Acceptable Solutions in section 7.4.4 of the Domestic Driveway Crossover Code ■ Domestic Driveway Crossover Code
Excavation and Fill	Exempt If - (1) Disturbing less than 50m^3 of soil; (2) A height/depth not exceeding 300mm measured from ground level Self-Assessable If - (1) Not exempt; (2) Complying with the assessment criteria being the acceptable solutions listed in column 3 Code Assessable If not self-assessable	■ Acceptable Solutions in section 8.6.4 of the Erosion Prevention and Sediment Control Code ■ Acceptable Solutions A1.(1)(b),(c),(d) in section 7.6.4 of the Excavation and Fill Code ■ Erosion Prevention and Sediment Control Code ■ Excavation and Fill Code
Placing an Advertising Device on Premises	Self-Assessable If complying with the assessment criteria being the acceptable solutions listed in column 3 Code Assessable If not self-assessable	■ Acceptable Solutions in section 7.1.4 of the Advertising Devices Code ■ Advertising Devices Code
Operational Work for Reconfiguring a Lot (by Standard Format Plan)	Code Assessable	■ Reconfiguration Code ■ Development Near Underground Infrastructure Code ■ Erosion Prevention and Sediment Control Code ■ Excavation and Fill Code ■ Infrastructure Works Code ■ Landscape Code ■ Stormwater Management Code

Environmental Protection Zone - Table of Assessment for Other Development

column 1	column 2	column 3
Other Development	**Level of Assessment**[4.49]	**Assessment Criteria**
Private Waterfront Structure	Code Assessable	■ Private Waterfront Structure Code ■ Development Near Underground Infrastructure Code ■ Erosion Prevention and Sediment Control Code ■ Excavation and Fill Code
All other development not listed in column 1	Exempt	

4.6.6 Compliance with Environmental Protection Zone Code

(1) Development that is consistent with the specific outcomes in section 4.6.8 complies with the Environmental Protection Zone Code.

Note -

The following planning scheme policies will assist in achieving specific outcomes within the Environmental Protection Zone Code -

- Planning Scheme Policy 4 - Ecological Impacts;
- Planning Scheme Policy 5 - Environmental Emissions;
- Planning Scheme Policy 9 - Infrastructure Works.

4.6.7 Overall Outcomes for Environmental Protection Zone Code

(1) The overall outcomes are the purpose of the Environmental Protection Zone Code.

(2) The overall outcomes for the Environmental Protection Zone are described by five key characteristics [4.52] -

(a) Environment;
(b) Uses and Other Development;
(c) Built Form and Density;
(d) Amenity;
(e) Infrastructure.

Each of these is detailed below.

(a) Environment

(i) Ensure uses and other development identify, protect and provide for the long-term management and enhancement of the environmental values associated with this zone, being -
a. habitats necessary for the long-term viability of native plants, native animals and ecosystems, whether significant for biodiversity or ecological reasons at the federal, state, regional or local level;
b. waterway, wetland, coastal, bushland and koala habitats;
c. corridors, networks, patches and mosaics of native plants, and all areas where native animals have relatively unimpeded movement when compared to urban areas;
d. corridors and patches of native plants that form links and refuges for native animals, such as koalas, to move into and out of urbanised areas;
e. native animals, native plants and ecosystems, any of which are common (least concern), vulnerable, rare or endangered as defined in the *Nature Conservation Act 1992*;
f. areas where the re-growth of native plants will support the role of remnant native plants;
g. areas where there are opportunities for enhancement of environmental values to occur through re-vegetation.

(ii) Uses and other development minimise adverse impacts on environmental values and scenic values by -
a. responding to topographical features;
b. minimising the need for excavation and fill;
c. protecting the site from erosion and sediment run-off;
d. incorporating best practice stormwater management and enhancing water quality;
e. maximising retention of native plants;
f. maximising the use of planting species that are native and characteristic to the area.

[4.52] In combination, the overall outcomes in section 4.6.7 (2)(a)-(e) define the character of the Environmental Protection Zone.

(b) Uses and Other Development

(i) Provide for a range of low-key uses and other development that -
- a. provide for a lifestyle choice that protects, maintains and positively contributes to environmental values;
- b. are based on appreciation of the natural environment where for the purpose of education or scientific study;
- c. encourage enjoyment of the natural environment including recreational and tourism uses that contribute to the public and private landscape network;
- d. provide opportunities for working from home in a bushland setting;
- e. are low-key and have a very low impact on environmental values;
- f. cover only a small proportion of the land;
- g. are less intensive than those in rural or industrial areas and provide economic opportunities, such as small-scale enterprises and, service and cottage industries.

(c) Built Form and Density

(i) The scale of uses and other development minimise adverse impacts on environmental values and the landscape setting by -
- a. using a low impact built form that reduces impacts on the land;
- b. limiting building height to maintain a low-rise appearance that sits among rather than dominates the landscape setting;
- c. using areas within the lot or premises that are already cleared or degraded;
- d. limiting and containing the footprint of the development.

(ii) Buildings incorporate a mix of materials and colours that complement the landscape setting.

(d) Amenity

(i) Uses and other development achieve a high standard of environmental and visual amenity by -
- a. protecting and enhancing places of cultural significance;
- b. protecting scenic values associated with the landscape, including bushland backdrops when viewed from nearby or at a distance;
- c. complementing the landscape setting within which development occurs;
- d. eliminating or mitigating impacts associated with light, noise, air quality and traffic.

(e) Infrastructure

(i) Uses and other development -
- a. minimise adverse impacts on environmental values by providing and designing infrastructure commensurate with the limited range of low-key activities expected in the zone;
- b. do not result in unacceptable risk to community infrastructure.

(ii) Infrastructure, specifically stormwater management, is designed to replicate the function and the appearance of natural systems.

(iii) Uses and other development are serviced by infrastructure including -
- a. reticulated water or adequate potable water supply;
- b. reticulated sewerage; or
- c. where the site is not able to be connected to a reticulated sewerage system, wastewater is treated and disposed of on-site subject to site, soil and locational constraints;
- d. stormwater drainage that maximises use and protection of natural overland drainage systems;
- e. constructed road access that minimises impact on native plants and overland drainage systems;
- f. energy;
- g. telecommunications;
- h. waste and recycling collection.

4.6.8 Specific Outcomes and Probable Solutions applicable to Assessable Development

Assessable Development			
Specific Outcomes		**Probable Solutions**	
	Environment -		
S1.1	(1) Uses and other development maintain, enhance and protect environmental values by - (a) re-vegetating degraded and cleared areas; (b) retaining and increasing native animal movement through the premises; (c) retaining as many native plants as possible; (d) preventing the introduction of non-native plants or animals into the premises; (e) controlling stormwater run-off and water quality; (f) maintaining overland drainage systems and waterways in their natural state; (g) minimising the need for excavation and fill; (h) reducing erosion and sediment run-off.	**P1.1**	(1) No probable solution identified.
S1.2	(1) Landscaping - (a) incorporates plant species that are native to the local area; (b) recognises and enhances the landscape setting of the local area; (c) supports the retention and rehabilitation of habitats and movement corridors; (2) Landscaping is included as a component of the stormwater management system; (3) Accessways and other unplanted, landscaped areas maximise stormwater infiltration through the use of permeable surfaces.	**P1.2**	(1) Species used for landscaping are selected from Part 9 - (a) Schedule 10 - Vegetation Species List as being suitable to the area; (b) Schedule 9 - Street Trees where within the road reserve; (2) No probable solution identified; (3) No probable solution identified. **Note -** For additional assessment criteria refer to Part 8 - ■ Division 8 - Landscape Code; ■ Division 9 - Stormwater Management Code.
	Uses and Other Development -		
S2.1	Uses identified as inconsistent in Table 1 are not established in the zone.	**P2.1**	No probable solution identified.
S2.2	(1) Uses and other development - (a) promote low-key tourism accommodation that is complementary to and has a direction connection with environmental values, such as cabins, cottages, eco-tourism and bed and breakfast; (b) provide opportunities	**P2.2**	(1) No probable solution identified.

Environmental Protection Zone

Assessable Development			
Specific Outcomes		**Probable Solutions**	
	recreational activities that have a direct connection with the environmental values of the land; (c) may include agricultural activities and small-scale enterprises or industries that support those activities, while protecting and enhancing environmental values; (d) support cottage industries that are managed and operated by the residents, such as timber work, pottery or similar crafts; (e) include educational, scientific and community activities that support environmental values and provide opportunities for appreciation or study of those values; (f) provide for a residential lifestyle that protects and maintains environmental values; (g) provide opportunities for working from home in a bushland setting.		
	Built Form and Density -		
S3.1	(1) All buildings, structures, car parking, accessways, service facilities, private open space, on-site waste disposal, storage, and associated tree clearing is limited to reduce adverse impacts on environmental values and the landscape setting.	**P3.1**	(1) All buildings, structures, car parking, accessways, service facilities, private open space, on-site waste disposal, storage, and associated tree clearing of all uses and other development does not exceed – (a) 30 percent for a lot or premises that is less than 1 hectare; or (b) 10 percent plus 3000m^2 for a lot or premises 1 hectare or greater.
S3.2	(1) Buildings and structures - (a) maintain a low rise appearance; (b) are not visually prominent from external areas.	**P3.2**	(1) Building height is - (a) 8.5 metres or less above ground level for residential and tourist uses; or (b) 10 metres or less when required to facilitate a productive activity.
S3.3	(1) Setbacks contribute to the maintenance and protection of environmental values and the landscape setting.	**P3.3**	(1) Buildings and other structures are set back - (a) for a lot or premises less than 2 hectares - a minimum of 10 metres from all boundaries; or (b) for a lot or premises greater than 2 hectares - (i) a minimum of 20 metres

Assessable Development			
Specific Outcomes		**Probable Solutions**	
			from all boundaries; or (ii) a minimum of 10 metres from all boundaries if screened by planted landscaping; or (c) where within a development envelope, the envelope is located to achieve P3.3(1)(a) or (b)(i) as appropriate.
S3.4	(1) Development envelopes, are established through material change of use or reconfiguration and are shaped and located to - (a) accommodate all associated activities, infrastructure, access and landscaping; (b) be within the most degraded or cleared areas of the premises; (c) minimise the footprint of the development area; (d) minimise edge effects to areas external to the development envelope.	**P3.4**	(1) No probable solution identified.
S3.5	(1) Building design incorporates architectural elements that - (a) exhibit a high degree of interest through the use of colour, angles, materials and shadows; (b) integrate with landscape planting and prevailing landscape features; (c) promote an attractive environmental landscape setting; (d) minimise any adverse overshadowing and reflective impacts; (e) are articulated to minimise appearance of building bulk and size.	**P3.5**	(1) No probable solution identified. **Note -** Refer to the relevant use codes for specific built form assessment criteria.
S3.6	(1) Fencing does not inhibit the movement of native animals - (a) within the lot or premises; (b) to external areas.	**P3.6**	(1) No probable solution identified. **Note -** Refer to Part 11 - Planning Scheme Policy 4 - Ecological Impacts for specific fauna friendly fencing criteria.
	Amenity -		
S4.1	Uses and other development do not adversely impact on cultural heritage values.	**P4.1**	No probable solution identified.
S4.2	Uses and other development protect scenic values associated with the	**P4.2**	No probable solution identified.

Environmental Protection Zone

Assessable Development			
Specific Outcomes		**Probable Solutions**	
	landscape, including bushland backdrops when viewed from nearby or at a distance.		
S4.3	(1) Artificial light does not result in unreasonable disturbance to any person, activity, or native animals; (2) Glare and reflection from the sun is minimised through materials and glazing choice.	**P4.3**	(1) The vertical or horizontal illumination resulting from direct, reflected or other incidental light emanating from the premises does not exceed 8 lux when measured at any point at or above ground level - (a) 1.5 metres outside the boundary of a development envelope; or (b) 10 metres from any buildings or work areas; (2) No probable solution identified.
S4.4	(1) Noise generated by the use or other development is compatible with that experienced in the natural environment setting of this zone.	**P4.4**	(1) The use or other development does not generate noise, measured as the $L_{Amax,adj,T}$ parameter, at the boundary of the development envelope or 20 metres from any buildings or external work areas, greater than - (a) 5dB(A) above the background noise level between 7am to 10pm; or (b) 3dB(A) above the background noise level between 10pm to 7am. **Note -** The $L_{Amax,adj,T}$ parameter is defined in the *Noise Measurement Manual* (Environmental Protection Agency, 2000).
S4.5	Air quality impacts are eliminated or mitigated to a level that is compatible with a natural environment setting and with adjoining residential development by not emitting vibration, odour, fumes, smoke, vapour, steam, soot, ash, dust, grit, oil, radio or electrical interferences beyond an approved development envelope, where one exists, or the property boundary, whichever is the lesser.	**P4.5**	No probable solution identified. **Note -** Refer to Part 11 - Planning Scheme Policy 5 - Environmental Emissions for further information on noise and air quality impacts.
S4.6	(1) Traffic movements are compatible with that experienced in an environmental setting; (2) Road and accessway design prioritise the movement of native animals.	**P4.6**	(1) Non-residential uses such as tourist, educational, community or similar are - (a) located on collector or higher order roads; (b) do not gain access from local roads; (2) No probable solution identified.

Assessable Development			
Specific Outcomes		**Probable Solutions**	
	Infrastructure -		
S5.1	Infrastructure is provided in an orderly and cost effective manner that meets the nominated level of service for the zone.	**P5.1**	No probable solution identified.
S5.2	(1) The location, alignment and design of infrastructure minimises adverse environmental impacts by - (a) replicating natural systems, specifically for stormwater management; (b) co-locating underground or above ground infrastructure along a single alignment, in conjunction with accessways; (c) minimising the removal of native plants; (d) preventing damage to tree roots; (e) maximising retention of native plants within the road reserve, specifically where new roads are proposed; (f) limiting, through co-location, the number of access points to the development.	**P5.2**	(1) No probable solution identified.
S5.3	(1) Uses and other development are provided with - (a) reticulated water; or (b) where the premises is not connected or able to be serviced by reticulated water, an adequate supply of potable water.	**P5.3**	(1) Where connection to a reticulated water supply system is not available, development is provided with a minimum potable water supply capacity of at least 20,000 litres per equivalent dwelling unit.
S5.4	(1) Uses and other development are provided with infrastructure including - (a) reticulated sewerage; or (b) where not able to be connected to a reticulated sewerage system, wastewater - (i) is treated and disposed of on-site subject to site, soil and locational constraints; (ii) reduces the potential for - a. contaminating groundwater, surface water or wetland environments; b. risks to reticulated water supply and public health; (c) stormwater management systems that - (i) utilise natural overland	**P5.4**	(1) No probable solution identified. **Note -** ■ Refer to Part 8 - Division 7 - Infrastructure Works Code for further information on provision, design and construction of infrastructure, roads and pedestrian and cycle paths. ■ Where creating new lots refer to Part 7 - Division 11 - Reconfiguration Code.

Assessable Development			
Specific Outcomes		**Probable Solutions**	
	drainage systems; (ii) incorporate measures to reduce stormwater quantity and improve stormwater quality; (d) constructed road access that minimises removal of native plants and the concentration of stormwater run-off; (e) energy; (f) telecommunications; (g) waste and recycling collection facilities.		
S5.5	(1) Waste and recycling is managed to minimise impacts on the environment by - (a) locating waste and recycling storage areas to protect amenity and to provide safe manual handling of containers; (b) screening waste and recycling container storage areas from view; (c) providing for the cleansing of containers in a manner that does not cause adverse environmental impacts.	**P5.5**	(1) No probable solution identified. **Note -** Refer to Part 11 - Planning Scheme Policy 9 - Infrastructure Works – Chapter 16 – Waste Management for further information on waste and recycling container volume, storage, servicing, screening and cleansing.
S5.6	Community infrastructure is able to function effectively during and immediately after flood events.	**P5.6**	Community infrastructure is located at or above the recommended flood levels in Table 2 - Recommended Flood Levels for Community Infrastructure;

Table 1 - Inconsistent Uses

Inconsistent Uses
Aged Persons and Special Needs Housing
Airport
Apartment Building
Brothel
Bulky Goods Showroom
Car Wash Facility
Caretakers Dwelling
Cemetery
Child Care Centre
Commercial Office
Display and Sale Activity
Drive Through Restaurant
Dual Occupancy
Extractive Industry
Funeral Parlour
General Industry
Heavy Industry
High Impact Industry
Hospital
Hotel
Indoor Recreation Facility
Institution

Inconsistent Uses
Landscape Supply Depot
Marine Services
Mobile Home Park
Multiple Dwelling
Night Club
Outdoor Dining
Outdoor Recreation Facility - where not catering primarily for tourist activities for recreational pursuits that have a direct connection with the natural or resource value of the area
Passenger Terminal
Refreshment Establishment - where having more than 100m^2 gross floor area
Retail Warehouse
Service Industry - where having more than 200m^2 gross floor area
Service Station
Shop
Small Lot House
Temporary Use
Vehicle Depot
Vehicle Parking Station
Vehicle Repair Premises
Veterinary Surgery
Warehouse

Table 2 - Recommended Flood Levels for Community Infrastructure

Type of Community Infrastructure	Recommended Flood Level AEP (ARI)
Emergency services, other than police facilities	0.2% (1 in 500 year ARI)
Emergency shelters	0.5% (1 in 200 year ARI)
Police facilities	0.5% (1 in 200 year ARI)
Hospitals and associated facilities	0.2% (1 in 500 year ARI)
Stores of valuable records or items of historic or cultural significance, such as galleries and libraries	0.5% (1 in 200 year ARI)
Power stations	0.2% (1 in 500 year ARI)
Major switch yards	0.2% (1 in 500 year ARI)
Substations	0.5% (1 in 200 year ARI)
Sewerage treatment plants	1% (1 in 100 year ARI)
Water treatment plants	0.5% (1 in 200 year ARI)
■ State-controlled roads ■ Works of an electricity entity not otherwise listed in this table ■ Railway lines, stations and associated facilities ■ Aviation facilities ■ Communication network facilities	No specific recommended flood level but development proponents should ensure that the infrastructure is optimally located and designed to achieve suitable levels of service, having regard to the processes and policies of the administering government agency.

Reference **-** *State Planning Policy Guideline 1/03: Mitigating the Adverse Impacts of Flood, Bushfire and Landslide.*

Environmental Protection Zone

this page purposely
left blank

Division 7 - General Industry Zone

4.7.1 Introduction

(1) This division contains the provisions for the General Industry Zone. They are -

(a) The General Industry Zone Tables of Assessment, that incorporates -
- (i) Levels of assessment for development in the General Industry Zone (section 4.7.2);
- (ii) Assessment criteria for development in the General Industry Zone (section 4.7.3);
- (iii) General Industry Zone - Table of Assessment for Material Change of Use of Premises (section 4.7.4);
- (iv) General Industry Zone - Table of Assessment for Other Development not associated with a Material Change of Use of Premises (section 4.7.5).

(b) The General Industry Zone Code, that incorporates -
- (i) Compliance with the General Industry Zone Code (section 4.7.6);
- (ii) Overall Outcomes for the General Industry Zone Code (section 4.7.7);
- (iii) Specific Outcomes and Probable Solutions applicable to Assessable Development (section 4.7.8).

4.7.2 Levels of assessment for development in the General Industry Zone

(2) Sections 4.7.4 and 4.7.5 identify the level of assessment for development in the General Industry Zone, as follows -

(a) section 4.7.4 General Industry Zone - Table of Assessment for Making a Material Change of Use of Premises [4.53]-
- (i) column 1 identifies uses that are exempt, self-assessable or assessable;
- (ii) column 2 identifies the level of assessment for the uses listed in column 1;
- (iii) the use is impact assessable where -
  - a. it is defined in Part 9 - Schedule 3 - Dictionary, Division 1 - Uses and is not listed in column 1; or
  - b. it is listed in column 1 and does not comply with the level of assessment qualifications listed in column 2; or
  - c. it is not defined in Part 9 - Schedule 3 - Dictionary, Division 1 - Uses.

(b) section 4.7.5 General Industry Zone - Table of Assessment for Other Development not associated with a Material Change of Use of Premises -
- (i) column 1 identifies other development that is exempt, self-assessable or assessable;
- (ii) column 2 identifies the level of assessment for other development listed in column 1;
- (iii) where the other development is not listed in column 1 it is exempt.

(3) Overlays may alter the level of assessment identified in (1)(a) and (b)[4.54].

[4.53] Works associated with an application for a material change of use of premises may be assessed together with the material change of use.

[4.54] Refer to Part 5 - Overlays to determine the level of assessment for the use or other development where an Overlay affects the lot and Part 1, section 1.2.5(10)(f) that explains how the highest level of assessment applies.

4.7.3 Assessment criteria for development in the General Industry Zone

(4) Development in the General Industry Zone is assessed against the assessment criteria listed in column 3 of sections 4.7.4 and 4.7.5, as follows -

(a) acceptable solutions of applicable codes for self-assessable development; or

(b) applicable codes for code assessable development.

(5) Self-assessable development that does not comply with all the acceptable solutions of the applicable codes is assessable development.

(6) Impact assessable development will be assessed against all relevant provisions of the Redlands Planning Scheme.

Note -

- The level of assessment indicated within section 4.7.4 - General Industry Zone - Table of Assessment for Material Change of Use of Premises may be affected by Division 2 of the Regulatory Provisions of the *SEQ Regional Plan 2005-2026.*
- The level of assessment for reconfiguration as indicated with section 4.7.5 - General Industry Zone - Table of Assessment for Other Development not associated with a Material Change of Use of Premises, where within the Regional landscape and Rural Production Area or Investigation Area of the *SEQ Regional Plan 2005-2026* -
  - complies with Division 3 of the Regulatory Provisions;
  - has a minimum lot size of 100 hectares, unless the subdivision meets an exclusion documented in Division 3.

Note -

Summary of General Industry Zone Sub-areas	
Sub-area	**Description**
Sub-area GL1	Cleveland
Sub-area GL2	Cleveland

4.7.4 General Industry Zone - Table of Assessment for Material Change of Use of Premises

General Industry Zone - Table of Assessment for Material Change of Use of Premises

column 1	column 2	column 3
Use[4.55]	**Level of Assessment**[4.56]	**Assessment Criteria**
Brothel	Code Assessable	■ General Industry Zone Code ■ *Prostitution Regulation 2000* IDAS Code[4.57] ■ Access and Parking Code ■ Development Near Underground Infrastructure Code ■ Erosion Prevention and Sediment Control Code ■ Excavation and Fill Code ■ Infrastructure Works Code ■ Landscape Code ■ Stormwater Management Code
Caretakers Dwelling	Code Assessable	■ General Industry Zone Code ■ Caretakers Dwelling Code
Education Facility	Code Assessable If in sub-area GL1 Otherwise - Impact Assessable	■ General Industry Zone Code ■ Access and Parking Code ■ Development Near Underground Infrastructure Code ■ Erosion Prevention and Sediment Control Code ■ Excavation and Fill Code ■ Infrastructure Works Code ■ Landscape Code ■ Stormwater Management Code
Emergency Service	Code Assessable	■ General Industry Zone Code ■ Access and Parking Code ■ Development Near Underground Infrastructure Code ■ Erosion Prevention and Sediment Control Code ■ Excavation and Fill Code ■ Infrastructure Works Code ■ Landscape Code ■ Stormwater Management Code
Estate Sales Office	Self-Assessable If complying with the assessment criteria being the acceptable solutions listed in column 3	■ Acceptable Solutions in section 6.12.4 of the Estate Sales Office Code ■ Acceptable Solutions in section 8.5.4 of the Development Near Underground Infrastructure Code

4.55 See Part 9 - Schedule 3 - Dictionary, Division 1 - Uses.
4.56 See Part 9 - Schedule 3 - Dictionary, Division 2 - Administrative Terms for a definition of level of assessment.
4.57 As contained in section 15 of the *Prostitution Regulation 2000* and legislated by Part 8 section 140(2)(f) of the *Prostitution Act 1999.*

General Industry Zone - Table of Assessment for Material Change of Use of Premises

column 1	column 2	column 3
Use[4.55]	**Level of Assessment**[4.56]	**Assessment Criteria**
	Code Assessable If not self-assessable	■ General Industry Zone Code ■ Estate Sales Office Code ■ Access and Parking Code ■ Development Near Underground Infrastructure Code
General Industry	Code Assessable	■ General Industry Zone Code ■ Access and Parking Code ■ Development Near Underground Infrastructure Code ■ Erosion Prevention and Sediment Control Code ■ Excavation and Fill Code ■ Infrastructure Works Code ■ Landscape Code ■ Stormwater Management Code
Hospital	Code Assessable If in sub-area GL1 Otherwise - Impact Assessable	■ General Industry Zone Code ■ Access and Parking Code ■ Development Near Underground Infrastructure Code ■ Erosion Prevention and Sediment Control Code ■ Excavation and Fill Code ■ Infrastructure Works Code ■ Landscape Code ■ Stormwater Management Code
Minor Utility	Exempt	
Park	Self-Assessable If - (1) Complying with the assessment criteria being the acceptable solutions listed in column 3; (2) Being undertaken by the local government; (3) On land in the ownership or control of the local government Code Assessable If not self-assessable	■ Acceptable Solutions in section 6.20.4 of the Park Code ■ Acceptable Solutions in section 8.5.4 of the Development Near Underground Infrastructure Code ■ General Industry Zone Code ■ Park Code ■ Access and Parking Code ■ Development Near Underground Infrastructure Code ■ Infrastructure Works Code ■ Landscape Code ■ Stormwater Management Code

General Industry Zone - Table of Assessment for Material Change of Use of Premises

column 1	column 2	column 3
Use[4.55]	**Level of Assessment**[4.56]	**Assessment Criteria**
Road	Exempt	
Service Industry	Code Assessable	■ General Industry Zone Code ■ Access and Parking Code ■ Development Near Underground Infrastructure Code ■ Erosion Prevention and Sediment Control Code ■ Excavation and Fill Code ■ Infrastructure Works Code ■ Landscape Code ■ Stormwater Management Code
Telecommunications Facility	Self-Assessable If complying with the assessment criteria being the acceptable solutions listed in column 3 Code Assessable If not self-assessable	■ Acceptable Solutions in section 6.26.4 of the Telecommunications Facility Code ■ Acceptable Solutions in section 8.5.4 of the Development Near Underground Infrastructure Code ■ Acceptable Solutions in section 8.6.4 of the Erosion Prevention and Sediment Control Code ■ Acceptable Solutions A1 (1) (a) and (c) in section 7.6.4 of the Excavation and Fill Code ■ General Industry Zone Code ■ Telecommunications Facility Code ■ Access and Parking Code ■ Development Near Underground Infrastructure Code ■ Erosion Prevention and Sediment Control Code ■ Excavation and Fill Code ■ Infrastructure Works Code ■ Landscape Code
Temporary Use	Self-Assessable If complying with the assessment criteria being the acceptable solutions listed in column 3 Code Assessable If not self-assessable	■ Acceptable Solutions in section 6.27.4 of the Temporary Use Code ■ General Industry Zone Code ■ Temporary Use Code
Utility Installation	Code Assessable	■ General Industry Zone Code ■ Access and Parking Code ■ Development Near Underground Infrastructure Code ■ Erosion Prevention and Sediment Control Code ■ Excavation and Fill Code ■ Landscape Code ■ Stormwater Management Code

General Industry Zone - Table of Assessment for Material Change of Use of Premises

column 1	column 2	column 3
Use[4.55]	**Level of Assessment**[4.56]	**Assessment Criteria**
Vehicle Depot	Code Assessable If not in sub-area GL1 Otherwise - Impact Assessable	■ General Industry Zone Code ■ Access and Parking Code ■ Development Near Underground Infrastructure Code ■ Erosion Prevention and Sediment Control Code ■ Excavation and Fill Code ■ Infrastructure Works Code ■ Landscape Code ■ Stormwater Management Code
Vehicle Parking Station	Code Assessable If not in sub-area GL1 Otherwise - Impact Assessable	■ General Industry Zone Code ■ Access and Parking Code ■ Development Near Underground Infrastructure Code ■ Erosion Prevention and Sediment Control Code ■ Excavation and Fill Code ■ Infrastructure Works Code ■ Landscape Code ■ Stormwater Management Code
Vehicle Repair Premises	Code Assessable If not in sub-area GL1 Otherwise - Impact Assessable	■ General Industry Zone Code ■ Access and Parking Code ■ Development Near Underground Infrastructure Code ■ Erosion Prevention and Sediment Control Code ■ Excavation and Fill Code ■ Infrastructure Works Code ■ Landscape Code ■ Stormwater Management Code
Warehouse	Code Assessable	■ General Industry Zone Code ■ Access and Parking Code ■ Development Near Underground Infrastructure Code ■ Erosion Prevention and Sediment Control Code ■ Excavation and Fill Code ■ Infrastructure Works Code ■ Landscape Code ■ Stormwater Management Code
Defined uses not listed in column 1	Impact Assessable	

General Industry Zone - Table of Assessment for Material Change of Use of Premises

column 1	column 2	column 3
Use[4.55]	Level of Assessment[4.56]	Assessment Criteria
Defined uses listed in column 1 that do not comply with the level of assessment qualifications in column 2	Impact Assessable	
Uses not defined in Part 9 - Schedule 3 - Dictionary, Division 1 - Uses	Impact Assessable	

4.7.5 General Industry Zone - Table of Assessment for Other Development not associated with a Material Change of Use of Premises

General Industry Zone - Table of Assessment for Other Development

column 1	column 2	column 3
Other Development	**Level of Assessment**[4.58]	**Assessment Criteria**
Reconfiguration for -		
Creating lots by subdividing another lot by Standard Format Plan[4.59]	Code Assessable If the proposal contains less than 20 lots Otherwise - Impact Assessable	■ General Industry Zone Code ■ Reconfiguration Code ■ Development Near Underground Infrastructure Code ■ Excavation and Fill Code ■ Infrastructure Works Code ■ Stormwater Management Code
Creating lots by subdividing another lot by - ■ Building Format Plan; or ■ Volumetric Plan	Code Assessable	■ General Industry Zone Code ■ Reconfiguration Code
■ Rearranging the boundaries of a lot by registering a plan of subdivision; or ■ Dividing land into parts by Agreement; or ■ Creating an easement giving access to a lot from a constructed road	Code Assessable	■ Reconfiguration Code
Building Work for -		
Communications Structures	Exempt If minor building work[4.60] Self-Assessable If - (1) Not exempt; (2) Complying with the assessment criteria being the acceptable solutions listed in column 3 Code Assessable If not self-assessable	■ Acceptable Solutions in section 7.2.4 of the Communications Structures Code ■ Communications Structures Code

[4.58] See Part 9 - Schedule 3 - Dictionary, Division 2 - Administrative Terms for a definition of level of assessment.
[4.59] Whether or not having a Community Management Statement.
[4.60] See Part 9 - Schedule 3 - Dictionary, Division 2 - Administrative Terms for a definition of minor building work.

General Industry Zone - Table of Assessment for Other Development

column 1	column 2	column 3
Other Development	**Level of Assessment**[4.58]	**Assessment Criteria**
Operational Work for -		
Excavation and Fill	Exempt If - (1) Disturbing less than 50m^3 of soil; (2) A height/depth not exceeding 300mm measured from ground level Self-Assessable If - (1) Not exempt; (2) Complying with the assessment criteria being the acceptable solutions listed in column 3; (3) Not in sub-area GL1 Code Assessable If not self-assessable	■ Acceptable Solutions in section 8.6.4 of the Erosion Prevention and Sediment Control Code ■ Acceptable Solutions A1.(1)(b),(c),(d) in section 7.6.4 of the Excavation and Fill Code ■ Erosion Prevention and Sediment Control Code ■ Excavation and Fill Code
Placing an Advertising Device on Premises	Self-Assessable If complying with the assessment criteria being the acceptable solutions listed in column 3 Code Assessable If not self-assessable	■ Acceptable Solutions in section 7.1.4 of the Advertising Devices Code ■ Advertising Devices Code
Operational Work for Reconfiguring a Lot (by Standard Format Plan)	Code Assessable	■ Reconfiguration Code ■ Development Near Underground Infrastructure Code ■ Erosion Prevention and Sediment Control Code ■ Excavation and Fill Code ■ Infrastructure Works Code ■ Landscape Code ■ Stormwater Management Code
All other development not listed in column 1	Exempt	

Note -

Summary of General Industry Zone Sub-areas	
Sub-area	**Description**
Sub-area GL1	Cleveland
Sub-area GL2	Cleveland

4.7.6 Compliance with General Industry Zone Code

(1) Development that is consistent with the specific outcomes in section 4.7.8 complies with the General Industry Zone Code.

Note -

The following planning scheme policies will assist in achieving specific outcomes in the General Industry Zone Code -

- Planning Scheme Policy 5 - Environmental Emissions;
- Planning Scheme Policy 9 - Infrastructure Works.

4.7.7 Overall Outcomes for General Industry Zone Code

(1) The overall outcomes are the purpose of the General Industry Zone Code.

(2) The overall outcomes sought for the General Industry Zone Code are described by six key characteristics[4.61] -

(a) Uses and Other Development;
(b) Built Form and Density;
(c) Amenity;
(d) Pollution Prevention;
(e) Environment;
(f) Infrastructure.

Each of these are detailed below.

(a) Uses and Other Development

(i) Provide land for general and service industrial uses that -
a. are large-scale manufacturing, assembly and processing activities;
b. serve industrial and agricultural activities;
c. store goods for distribution and sale at other locations;
d. provide local employment opportunities;
e. in sub-area GL1 - are high technology activities including research and development, information technology and manufacturing of goods related to the scientific or medical industries.
f. in sub-area GL2 – do not adversely impact on the amenity of adjoining residential areas.

(ii) Provide for non-industrial uses that –
a. is designed to minimise adverse impacts on adjoining residential areas;
b. are compatible with industrial uses;
c. do not compromise the efficient use of land in this limited land resource;
d. are associated with the use on the lot or premises;
e. serve the immediate workforce;
f. in sub-area GL1 - support the operations of the Redlands Public Hospital.

(iii) Other development does not compromise expected uses and associated activities in the zone.

(b) Built Form and Density

(i) Uses and other development have a site layout that -
a. utilise land efficiently;
b. provide for vehicle access, parking, manoeuvring and loading/unloading areas;
c. contribute to security of property and safety of people;
d. minimise noise generation and other negative impacts;
e. in sub-area GL1 - maintain significant stands of *eucalyptus racemosa* within the site.

[4.61] In combination, the overall outcomes in section 4.7.7(2)(a)-(f) define the character of the General Industry Zone.

(ii) The scale of uses and other development achieve a standard of built form that -
   a. adopt a building height, width, depth and bulk that minimise the visual impacts of the large scale built form associated with uses within this zone;
   b. in sub-area GL1 - is interspersed among the significant stands of *eucalyptus racemosa* within the site.

(iii) The density of uses and other development -
   a. result in coordinated and efficient use of the land;
   b. provide for employee and customer car parking, landscaping and service areas.

(c) Amenity

(i) Uses and other development achieve a high standard of environmental amenity by -
   a. providing a landscaped setting that complements the large-scale nature of built form in this zone;
   b. minimising visual clutter associated with fencing and signage along all street frontages.

(d) Pollution Prevention

(i) Uses and other development operate in a manner that -
   a. is within acceptable environmental standards;
   b. mitigate adverse impacts associated with light, noise and air, among other emissions;
   c. utilise best practice techniques and operations to minimise adverse impacts associated with stormwater run-off and other potentially water or soil contaminating substances.

(e) Environment

(i) The scale and operational attributes of uses and other development minimise adverse impacts on the environment by -
   a. responding to topographical features;
   b. limiting the need for excavation and fill;
   c. protecting the site from erosion;
   d. maximising the use of plant species that are native to the area;
   e. incorporating best practice stormwater management and enhancing water quality;
   f. in sub-area GL1 - retaining the *eucalyptus racemosa* species that is significant in this area.

(f) Infrastructure

(i) Uses and other development -
   a. make efficient use of existing infrastructure;
   b. provide for the extension of infrastructure in an orderly and cost effective manner;
   c. do not result in unacceptable risk to community infrastructure.

(ii) Uses and other development are serviced by infrastructure including -
   a. reticulated water;
   b. reticulated sewerage;
   c. stormwater drainage;
   d. constructed road access;
   e. energy;
   f. telecommunications.

(iii) Uses and other development manage the generation, storage and disposal, recycling or re-use of waste to a standard commensurate with the specific activities of the use.

(iv) Uses and other development reinforce an attractive, integrated, legible, efficient and safe movement network that -
   a. incorporate a full range of modes including public transport, passenger vehicles, walking and cycling;
   b. provide pedestrian, cycle and vehicle movement networks that maximise connectivity, permeability and ease of mobility.

4.7.8 Specific Outcomes and Probable Solutions applicable to Assessable Developm ent

Assessable Development			
Specific Outcomes		**Probable Solutions**	
	Uses and Other Development -		
S1.1	Uses identified as inconsistent in Table 1 are not established in the zone.	**P1.1**	No probable solution identified.
S1.2	(1) The following activities are consistent in the zone - (a) the repair, servicing, assembling and making of a range of products; (b) storage and transport logistics activities; (c) the supply, repair and service of agricultural equipment; (d) value adding or further processing of primary products; (e) in sub-area GL1 - high technology industries, scientific or medical research, or similar activities. (f) in sub-area GL2 – proposed uses will minimise amenity impacts particularly noise and odour, affecting adjoining residential areas.	**P1.2**	(1) No probable solution identified.
S1.3	(1) Other activities considered compatible are those that - (a) support - (i) industrial uses; or (ii) in sub-area GL1 - the operations of the Redlands Public Hospital; (b) do not compromise - (i) the role and function of nearby centres; (ii) the Commercial Industry Zone; (iii) the limited land in this zone; (c) require large land areas and industrial style and size buildings; (d) are ancillary to an industrial use; (e) serve the immediate workforce.	**P1.3**	(1) Other activities include - (a) activities ancillary to an industrial use, including administration offices, display areas for products manufactured, assembled or finished on the site and with less than 500m^2 or 10 percent of the gross floor area of the use, whichever is the lesser; or (b) in sub-area GL1 - activities related to or supporting Redlands Public Hospital in the form of - (i) education facility; (ii) hospital; (iii) health care centre; (iv) general or service industry for the purpose of repairing, servicing or processing medical related instruments or products; (c) emergency services; (d) refreshment establishments with 150m^2 or less gross floor area.

Assessable Development			
Specific Outcomes		**Probable Solutions**	
S1.4	Other development does not inhibit the ongoing operations and future economic opportunities of uses expected in the zone.	**P1.4**	No probable solution identified.
S2.1	Built Form and Density - (1) Site layout - (a) uses the site efficiently and allocates sufficient areas for all activities related to the use; (b) provides for vehicle access to the use that does not adversely affect the function of the road from which the use is accessed; (c) locates employee parking, manoeuvring and loading/unloading areas to the side or rear of the site; (d) locates customer parking at visible locations that have easy and direct pedestrian access to building entries; (e) provides opportunities to consolidate and co-ordinate on-site parking and service areas; (f) is designed to maximise personal safety for employees and visitors to the site; (g) where having a common boundary with the Urban Residential, Medium Density Residential or Conservation Zones ensures that - (i) openings are not located in walls facing the common boundary; (ii) potentially noise emitting equipment, machinery or outdoor work areas are located as far as practical from these zones; (iii) built form does not result in the overshadowing or loss of privacy to properties in these zones; (h) in sub-area GL1 - locates buildings, structures, accessways, parking areas and any other hard surfaces so as to maximise the retention of *eucalyptus racemosa*.	**P2.1**	(1) No probable solution identified. **Note -** Refer to Part 8 - Division 1 - Access and Parking Code for requirements related to vehicle access and parking outcomes.

Assessable Development			
Specific Outcomes		**Probable Solutions**	
S2.2	(1) Setbacks of all buildings - (a) allow for the safe and efficient use of the site; (b) allow for planted landscaping along street frontages; (c) provide employee and visitor car parking at visible locations that have easy and direct pedestrian access to building entries; (d) contribute to the building form and provide an attractive streetscape; (e) enable the effective location of overland flow paths and utility infrastructure; (f) are increased where required to provide - (i) overland flow paths associated with stormwater management, (ii) other infrastructure; (iii) car parking; (iv) access to service areas; (g) in sub-area GL1 - maximise the retention of *eucalyptus racemosa*; (2) On corner lots, setbacks to the secondary road are consistent with primary road setbacks.	**P2.2**	(1) Setback of buildings - (a) from the primary road frontage is greater than 15 metres; (b) from the side and rear boundaries is - (i) between 0 and 10 metres for buildings, structures or designated outdoor work areas; or (ii) greater than 15 metres where adjoining the Urban Residential or Medium Density Residential Zones; (c) in sub-area GL1 - may be modified from those listed in (a) and (b) where it is demonstrated that this results in the optimal retention of *eucalyptus racemosa* and habitat corridors through the site; (2) Complies with front setback requirements in P2.2(1).
S2.3	(1) Building height minimises the visual impact of the large scale built form associated with this zone.	**P2.3**	(1) Building height is no greater than - (a) 15 metres; or (b) 8.5 metres at any part of the building which is adjoining an Urban Residential Zone or Medium Density Residential Zone.
S2.4	(1) Building design and materials - (a) achieve a high quality industrial style; (b) maximise active facades to the primary street frontage through locating offices, showrooms and customer service areas towards the front of the building; (c) limit expansive blank walls along the primary street frontage through horizontal and vertical variation, solid and void, shadow detail and colour; (d) utilise non-reflective materials.	**P2.4**	(1) No probable solution identified.
S2.5	(1) Site coverage of buildings balances built and un-built areas to -	**P2.5**	(1) Uses and other development are designed so that - (a) building site coverage is a

Assessable Development			
Specific Outcomes		**Probable Solutions**	
	(a) assist in retaining existing native plants; (b) provide space for on-site landscaping and planting; (c) provide areas for access, parking, manoeuvring, outdoor work and service functions; (d) facilitate stormwater management; or (2) Site coverage in sub-area GL1 - is minimised to retain *eucalyptus racemosa*. (3) Designed to minimise impacts on adjoining residential areas.		maximum of - (i) 60 percent of the site area at the ground floor level; (ii) 70 percent of the site area above ground floor level; (b) total development area including access, parking, service and outdoor work areas is a maximum of 90 percent of the site area; (c) planted landscaping accommodates a minimum of 10 percent of the site area; or (2) In sub-area GL1 - (a) building site coverage is a maximum of 35 percent of the site; (b) total development area including access, parking, service and outdoor work areas is a maximum of 70 percent of the site area; (c) at least 30 percent of the site area accommodates retention of *eucalyptus racemosa*.
S2.6	Lot sizes efficiently utilise this land resource while facilitating uses proposed in the zone.	**P2.6**	Minimum lot size is 4000m^2. **Note -** Refer to Part 7 - Division 11 - Reconfiguration Code for further assessment criteria.
	Amenity -		
S3.1	(1) High quality landscaping including planting, paving and other components of the landscape are provided that - (a) are of a suitable scale relative to the road reserve width and the building size; (b) have regard to the nature and scale of the use and the need for any intensive screen planting where adjoining a sensitive environment; (c) are used to break up the visual bulk of large scale buildings; (d) are sensitive to site attributes and the surrounding natural environment; (e) create visual relief and shade particularly within car parking areas; (f) are used to screen outdoor storage, work and service or other obtrusive areas from	**P3.1**	(1) Landscaping - (a) incorporates a - (i) minimum 10 metre wide planted landscaped area on the primary road frontage, which may be reduced to a minimum width of 5 metres for a maximum of 50 percent of the frontage when incorporating car parking; (ii) minimum 5 metre wide planted landscaped area on any secondary road frontage; (iii) densely planted 6 metre wide landscaped buffer, in combination with a solid 2 metre high fence, where having a common boundary with the Urban Residential or Medium Density Residential Zones; (b) reduces the visual bulk and

Assessable Development			
Specific Outcomes		**Probable Solutions**	
	public view; (g) are used to define building entrances and pedestrian paths;		height of buildings by - (i) incorporating tree planting that will achieve a canopy spread over a minimum of 30 percent of the site frontage length within 5 years of planting; (ii) ensuring that a minimum of 30 percent of all trees proposed are capable of growing to the height of the eaves of the building; (iv) incorporating under tree planting of ground covers and shrubs; (c) in car parking areas incorporates planting that provides shade and breaks up large open areas.
P3.2	(1) In sub-area GL1 - existing vegetation including *eucalyptus racemosa* is utilised within the landscaping. (2) In sub-area GL2 - the operation aspects of the proposed uses do not adversely impact on the amenity of adjoining residential areas.	**P3.2**	(1) In sub-area GL1 - retain existing *eucalyptus racemosa* within the site as a component of landscaping. (2) No probable solution identified. **Note -** For additional assessment criteria refer to Part 8 - ■ Division 1 - Access and Parking Code; ■ Division 8 - Landscape Code.
S3.3	(1) Fences and non-building walls - (a) are visually attractive and contribute to or blend with planted landscaping and building materials; (b) provide an effective visual and acoustic screen to adjoining sensitive environments; (c) assist in highlighting entrances and pedestrian paths; (d) maximise safety and security; (e) in sub-area GL1 - facilitate the movement of native animals through the site.	**P3.3**	(1) Fences and non-building walls - (a) on the property boundary to any street frontage are not greater than 1.2 metres high; (b) at the front and side, where greater than 1.2 metres in height are - (i) erected behind the front building line rather than the property boundary of any street frontage; (ii) screened by landscaping; (c) on rear boundaries are chain wire rather than solid and a colour that blends with the surrounding built, planted or natural environment; (d) which are an extension of retaining walls or earth batters are landscaped or planted; (e) where having a common boundary with the Urban Residential or Medium Density Residential Zones are 2 metres high, solid and incorporate planted landscaping.

Assessable Development			
Specific Outcomes		**Probable Solutions**	
S3.4	(1) Signage clutter is minimised, especially to the external streetscape; (2) Communal signage is provided, preferably in the form of an architectural and landscaped feature.	**P3.4**	(1) No probable solution identified; (2) No probable solution identified. **Note -** Refer to Part 7 - Division 1 - Advertising Devices Code for signage requirements.
	Pollution Prevention -		
S4.1	(1) Noise and vibration emissions generated by the operational activities of the use are minimised by - (a) acoustically housing noise emitting plant and equipment; (b) locating away from sensitive environments - (i) major openings in buildings; (ii) outdoor work areas.	**P4.1**	(1) Noise generated by the use - (a) complies with - (i) Table 2 - Noise levels at the boundary of the General Industry Zone; or (ii) Table 3 - Noise levels at the boundary of the nearest residential zone; or (iii) approval issued under the *Environmental Protection Act 1994*; (b) is minimised between 6pm and 7am Monday to Saturday, and all day Sunday by - (i) not carrying out any activities in outdoor use areas; (ii) limiting indoor activities to office and administrative tasks, and other activities that are not audible or visible from outside the building; (iii) not receiving any deliveries.
S4.2	(1) Uses and other development minimise emissions of dust and odour and the generation of airborne pollutants; (2) Dust impacts of vehicle movements and stockpiling of materials are eliminated or mitigated.	**P4.2**	(1) Emissions of dust or odour and the generation of airborne pollutants do not exceed the relevant guidelines set out in Schedule 1 of the *Environmental Protection (Air) Policy 1997*. (2) No probable solution identified. **Note -** Refer to Part 11 - Planning Scheme Policy 5 - Environmental Emissions for further information relating to noise and air quality impacts.
S4.3	(1) Artificial lighting does not result in unreasonable disturbance to any person or activity; (2) Glare and reflection from the sun are minimised through material and glazing choice.	**P4.3**	(1) The vertical illumination resulting from direct, reflected or other incidental light emanating from the site does not exceed 8 lux when measured at any point 1.5 metres outside the boundary at or above ground level; (2) No probable solution identified.

Assessable Development			
Specific Outcomes		**Probable Solutions**	
S4.4	(1) Land contamination is minimised by - (a) ensuring storage, use and spillage of potential contaminants does not result in the contamination of land; (b) incorporating waste storage and collection measures that protect against spillage of contaminated materials; (c) ensuring storage areas for potentially contaminating substances are roofed and located on impermeable surfaces; (d) incorporating space for accidental spill areas to be bunded and the contaminant retained on-site in an impervious area/system, before removal by an approved means.	**P4.4**	(1) No probable solution identified.
S4.5	(1) Emission of contaminants, including heat, radioactivity, electromagnetic radiation or the like do not cause adverse environmental impacts; (2) The use or other development does not involve radioactive or bio-hazardous - (a) materials; (b) processes.	**P4.5**	(1) No probable solution identified; (2) No probable solution identified.
S4.6	(1) Eliminate risk to people, property and the environment from hazards including, fire, explosion and chemical release.	**P4.6**	(1) The use is not defined in the *Dangerous Goods Safety Management Regulation 2001* as a- (a) Dangerous Goods Location or Large Dangerous Goods Location; (b) Major Hazardous Facility. **Note -** Refer to Schedule 1 and 2 of the *Dangerous Goods Safety Management Regulation 2001*.
	Environment -		
S5.1	(1) Uses and other development on land with environmental values is consistent with the effective protection of those values from external impacts, including - (a) stormwater run-off; (b) water quality; (c) erosion and sediment run-off; (d) weed infestation.	**P5.1**	(1) No probable solution identified.

Assessable Development			
Specific Outcomes		**Probable Solutions**	
S5.2	(1) Minimise the need for excavation and fill by uses and other development being located and designed to - (a) prevent the unnecessary removal of native plants; (b) protect overland drainage flows; (c) reduce erosion and sediment run-off.	**P5.2**	(1) No probable solution identified. **Note -** Refer to Part 7 - Division 6 - Excavation and Fill Code for assessment criteria where the site requires earthworks.
S5.3	(1) Landscaping - (a) incorporates plant species native to the local area; (b) maximises permeable surfaces to improve the quality and reduce the quantity of stormwater run-off; (c) is incorporated as a component of the stormwater management system; (d) acts as a filter for stormwater run-off from car parking areas contaminated by hydrocarbons; (2) In sub-area GL1 - existing *eucalyptus racemosa* are retained, and only additional species that are compatible with this significant vegetation community are utilised in landscaping.	**P5.3**	(1) Landscaping - (a) maximises the use of native species listed in Part 9 - (b) Schedule 10 - Vegetation Species List; (c) Schedule 9 - Street Trees where within the road reserve; (2) No probable solution identified. **Note -** For additional assessment criteria refer to Part 8 - ■ Division 8 - Landscape Code; ■ Division 9 - Stormwater Management Code.
	Infrastructure -		
S6.1	Uses and other development efficiently utilise existing infrastructure and does not inhibit future extension of infrastructure.	**P6.1**	No probable solution identified.
S6.2	(1) Uses and other development are serviced by infrastructure including - (a) reticulated water; (b) reticulated sewerage; (c) energy; (d) telecommunications.	**P6.2**	(1) No probable solution identified.
S6.3	(1) Stormwater management for the site - (a) enhances water quality at receiving waters; (b) protects waterways from potential contamination; (c) effectively provides for overland drainage flows due to large hard stand and roof areas associated with built forms in this zone.	**P6.3**	(1) Stormwater management for the site ensures that the quality of stormwater leaving the lot or premises achieves the standards detailed in Part 9 - Schedule 11 - Water Quality Objectives. **Note -** Refer to Part 8 - Division 9 - Stormwater Management Code for stormwater

Assessable Development			
Specific Outcomes		**Probable Solutions**	
			management assessment criteria.
S6.4	(1) Waste and recycling is managed to minimise impacts on the environment and nearby premises by - (a) locating waste and recycling storage areas to protect amenity and to provide safe manual handling of containers; (b) screening waste and recycling container storage areas from view; (c) providing for the cleansing of containers in a manner that does not cause adverse environmental impacts; (2) Uses and other development - (a) provide safe and efficient manoeuvring for waste collection vehicles; (b) ensure all bulk waste and recycling containers are serviced off-street and not on roads with public access; (c) ensure sufficient vertical clearance for container servicing; (d) ensure unobstructed access to containers by collection vehicles; (3) Waste and recycling storage is designed and located to - (a) provide adequate container volume to contain the waste and recyclables; (b) provide recycle containers in an equivalent or greater volume to waste containers; (c) provide a dedicated waste and recycling container storage area that is convenient and safe to use; (d) ensure containers are located on impermeable surfaces.	**P6.4**	(1) No probable solution identified. (2) No probable solution identified. (3) No probable solution identified. **Note -** Refer to Part 11 - Planning Scheme Policy 9 - Infrastructure Works – Chapter 16 – Waste Management for further information on waste and recycling container volume, storage, servicing, screening and cleansing. Refer to Part 8 - Division 1 - Access and Parking Code for waste collection vehicle servicing and manoeuvring assessment criteria.
S6.5	(1) Vehicle access, parking facilities and service delivery areas are located and designed to - (a) minimise conflicts between pedestrians and cyclists with vehicles and service delivery vehicles; (b) provide for integrated car parking and service delivery areas.	**P6.5**	(1) No probable solution identified. **Note -** For additional assessment criteria refer to Part 8 - ■ Division 1 - Access and Parking Code; ■ Division 7 - Infrastructure Works Code.
S6.6	(1) Opportunities for cycling as a modal choice for employees and customers are provided through -	**P6.6**	(1) Cycling facilities include - (a) on-site bicycle facilities that are designed and constructed in

Assessable Development			
Specific Outcomes		**Probable Solutions**	
	(a) clearly defined on-site cycle paths and facilities; (b) secure cycle storage areas, and facilities including showers and lockers for employees; (c) provision of cycle racks for customers.		accordance with *AUSTROAD's Traffic Engineering Practice*, Part 14 - Bicycles; (b) the following for employees - (i) 1 bicycle space per 500m^2 of gross floor area; (ii) 1 personal locker per 2 bicycle parking spaces; (iii) 1 shower cubicle with a change area per 5 bicycle spaces; or (iv) 1 shower cubicle with a change area if less than 5 bicycle spaces are required; (c) 1 bicycle space per 500m^2 of gross floor area for customers up to a maximum of 10 spaces.
S6.7	Community infrastructure is able to function effectively during and immediately after flood events.	**P6.7**	Community infrastructure is located at or above the recommended flood levels in Table 4 - Recommended Flood Levels for Community Infrastructure.

Table 1 - Inconsistent Uses

Inconsistent Uses
Aged Persons and Special Needs Housing
Agriculture
Airport - in sub-area GL1
Animal Keeping
Apartment Building
Bed and Breakfast
Bulky Goods Showroom
Car Wash Facility
Cemetery
Commercial Office
Community Facility - except in sub-area GL1
Display and Sale Activity
Display Dwelling
Drive Through Restaurant
Dual Occupancy
Dwelling House
Education Facility - except in sub-area GL1
Extractive Industry
Forestry
Funeral Parlour
Garden Centre
Health Care Centre - except in sub-area GL1
Heavy Industry - in sub-area GL1 and sub-area GL2
High Impact Industry
Home Business
Hospital - except in sub-area GL1
Hotel
Indoor Recreation Facility
Intensive Agriculture
Marine Services
Mobile Home Park
Multiple Dwelling
Night Club
Outdoor Dining

Inconsistent Uses
Outdoor Recreation Facility
Passenger Terminal - in sub-area GL1
Place of Worship
Produce Store - in sub-area GL1
Refreshment Establishment - where having more than 150m^2 gross floor area
Relatives Apartment
Retail Warehouse
Roadside Stall
Rural Enterprise - in sub-area GL1
Service Station - in sub-area GL1
Shop
Small Lot House
Tourist Accommodation
Tourist Park
Vehicle Depot - in sub-area GL1
Vehicle Parking Station - in sub-area GL1
Vehicle Repair Premises - in sub-area GL1
Veterinary Surgery

Table 2 - Noise levels at the boundary of the General Industry Zone

Period	Noise level at the boundary of the General Industry Zone[1]
7am - 10pm	Background noise level plus 10dB(A)
10pm - 7am	Background noise level plus 8 dB(A)

Note[1] - Measured as the adjusted maximum sound pressure level $L_{Amax,adj,T}$ - as defined in the *Noise Measurement Manual* (Environmental Protection Agency, 2000).

Table 3 - Noise levels at the boundary of the nearest residential zone

Period	Noise level at the boundary of the nearest residential zone[1]
7am - 10pm	Background noise level plus 5 dB(A)
10pm - 7am	Background noise level plus 3 dB(A)

Note[1] - Measured as the adjusted maximum sound pressure level $L_{Amax,adj,T}$ - as defined in the *Noise Measurement Manual* (Environmental Protection Agency, 2000).

Table 4 - Recommended Flood Levels for Community Infrastructure

Type of Community Infrastructure	Recommended Flood Level AEP (ARI)
Emergency services, other than police facilities	0.2% (1 in 500 year ARI)
Emergency shelters	0.5% (1 in 200 year ARI)
Police facilities	0.5% (1 in 200 year ARI)
Hospitals and associated facilities	0.2% (1 in 500 year ARI)
Stores of valuable records or items of historic or cultural significance such as galleries and libraries	0.5% (1 in 200 year ARI)
Power stations	0.2% (1 in 500 year ARI)
Major switch yards	0.2% (1 in 500 year ARI)
Substations	0.5% (1 in 200 year ARI)
Sewerage treatment plants	1% (1 in 100 year ARI)
Water treatment plants	0.5% (1 in 200 year ARI)
■ State-controlled roads ■ Works of an electricity entity not otherwise listed in this table ■ Railway lines, stations and associated facilities ■ Aviation facilities ■ Communication network facilities	No specific recommended flood level but development proponents should ensure that the infrastructure is optimally located and designed to achieve suitable levels of service, having regard to the processes and policies of the administering government agency.

Reference - *State Planning Policy Guideline 1/03: Mitigating the Adverse Impacts of Flood, Bushfire and Landslide.*

this page purposely
left blank

Division 8 - Investigation Zone

4.8.1 Introduction

(1) This division contains the provisions for the Investigation Zone. They are -

(a) The Investigation Zone Tables of Assessment, that incorporates -
- (i) Levels of assessment for development in the Investigation Zone (section 4.8.2);
- (ii) Assessment criteria for development in the Investigation Zone (section 4.8.3);
- (iii) Table of Assessment for Material Change of Use of Premises (section 4.8.4);
- (iv) Investigation Zone - Table of Assessment for Other Development not associated with a Material Change of Use of Premises (section 4.8.5).

(b) The Investigation Zone Code, that incorporates -
- (i) Compliance with the Investigation Zone Code (section 4.8.6);
- (ii) Overall Outcomes for the Investigation Zone Code (section 4.8.7);
- (iii) Specific Outcomes and Probable Solutions applicable to Assessable Development (section 4.8.8).

4.8.2 Levels of assessment for development in the Investigation Zone

(2) Sections 4.8.4 and 4.8.5 identify the level of assessment for development in the Investigation Zone, as follows -

(a) section 4.8.4 Investigation Zone - Table of Assessment for Making a Material Change of Use of Premises [4.62] -
- (i) column 1 identifies uses that are exempt, self-assessable or assessable;
- (ii) column 2 identifies the level of assessment for the uses listed in column 1;
- (iii) the use is impact assessable where -
  - a. it is defined in Schedule 3 - Dictionary, Division 1 - Uses and is not listed in column 1; or
  - b. it is listed in column 1 and does not comply with the level of assessment qualifications listed in column 2; or
  - c. it is not defined in Schedule 3 - Dictionary, Division 1 - Uses.

(b) section 4.8.5 Investigation Zone - Table of Assessment for Other Development not associated with a Material Change of Use of Premises -
- (i) column 1 identifies other development that is exempt, self-assessable or assessable;
- (ii) column 2 identifies the level of assessment for other development listed in column 1;
- (iii) where the other development is not listed in column 1 it is exempt.

(3) Overlays may alter the level of assessment identified in (1)(a) and (b)[4.63].

[4.62] Works associated with an application for a material change of use of premises may be assessed together with the material change of use.

[4.63] Refer to Part 5 - Overlays to determine the level of assessment for the use or other development where an Overlay affects the lot and Part 1, section 1.2.5(10)(f) that explains how the highest level of assessment applies.

4.8.3 Assessment criteria for development in the Investigation Zone

(4) Development in the Investigation Zone is assessed against the assessment criteria listed in column 3 of sections 4.8.4 and 4.8.5, as follows -

(a) acceptable solutions of applicable codes for self-assessable development; or

(b) applicable codes for code assessable development.

(5) Self-assessable development that does not comply with all the acceptable solutions of the applicable codes is assessable development. Non compliance with only the acceptable solutions for self-assessable development in relation to setbacks and site cover under the QDC or nominated "Alternative Provisions" or Building Assessment Provisions will not elevate the level of assessment of a proposal from self assessable development to assessable development under the Redlands Planning Scheme. In these instances, the local government will undertake the functions of a referral agency with Concurrence Agency jurisdiction under IPA to assess and determine these matters.

(6) Impact assessable development will be assessed against all relevant provisions of the Redlands Planning Scheme.

Note -

- The level of assessment indicated within Section 4.8.4 - Investigation Zone - Table of Assessment for Material Change of Use of Premises may be affected by Division 2 of the Regulatory Provisions of the *SEQ Regional Plan 2005-2026.*
- The level of assessment for reconfiguration as indicated within section 4.8.5 - Investigation Zone - Table of Assessment for Other Development not associated with a Material Change of Use of Premises, where within the Regional Landscape and Rural Production Area or Investigation Area of the *SEQ Regional Plan 2005-2026* -
  - complies with Division 3 of the Regulatory Provisions;
  - has a minimum lot size of 100 hectares, unless the subdivision meets an exclusion documented in Division 3.

4.8.4 Investigation Zone - Table of Assessment for Material Change of Use of Premises

Investigation Zone - Table of Assessment for Material Change of Use of Premises

column 1	column 2	column 3
Use[4.64]	**Level of Assessment**[4.65]	**Assessment Criteria**
Agriculture	Code Assessable	■ Investigation Zone Code ■ Agriculture Code ■ Access and Parking Code ■ Infrastructure Works Code ■ Stormwater Management Code
Animal Keeping	Code Assessable	■ Investigation Zone Code ■ Animal Keeping Code ■ Access and Parking Code ■ Infrastructure Works Code ■ Stormwater Management Code
Bed and Breakfast	Self-Assessable If complying with the assessment criteria being the acceptable solutions listed in column 3 Code Assessable If not self-assessable	■ Acceptable Solutions in section 6.5.4 of the Bed and Breakfast Code ■ Investigation Zone Code ■ Bed and Breakfast Code ■ Infrastructure Works Code ■ Landscape Code
Caretakers Dwelling	Code Assessable	■ Investigation Zone Code ■ Caretakers Dwelling Code
Community Facility	Code Assessable	■ Investigation Zone Code ■ Access and Parking Code ■ Development Near Underground Infrastructure Code ■ Erosion Prevention and Sediment Control Code ■ Excavation and Fill Code ■ Infrastructure Works Code ■ Landscape Code ■ Stormwater Management Code
Dwelling House	Code Assessable	■ Investigation Zone Code ■ Dwelling House Code ■ Development Near Underground Infrastructure Code ■ Erosion Prevention and Sediment Control Code ■ Excavation and Fill Code ■ Infrastructure Works Code ■ Stormwater Management Code

[4.64] See Schedule 3 - Dictionary, Division 1 - Uses.
[4.65] Schedule 3 - Dictionary, Division 2 - Administrative Terms for a definition of level of assessment.

Investigation Zone - Table of Assessment for Material Change of Use of Premises

column 1	column 2	column 3
Use[4.64]	**Level of Assessment**[4.65]	**Assessment Criteria**
Home Business	Self-Assessable If complying with the assessment criteria being the acceptable solutions listed in column 3 Code Assessable If not self-assessable	■ Acceptable Solutions in section 6.15.4 of the Home Business Code ■ Investigation Zone Code ■ Home Business Code ■ Access and Parking Code And where being carried out in a domestic outbuilding - ■ Domestic Outbuilding Code ■ Development Near Underground Infrastructure Code ■ Erosion Prevention and Sediment Control Code ■ Excavation and Fill Code
Minor Utility	Exempt	
Park	Self-Assessable If - (1) Being undertaken by the local government; (2) On land in the ownership or control of the local government; (3) Complying with the assessment criteria being the acceptable solutions listed in column 3 Code Assessable If not self-assessable	■ Acceptable Solutions in section 6.20.4 of the Park Code ■ Acceptable Solutions of section 8.5.4 of the Development Near Underground Infrastructure Code ■ Investigation Zone Code ■ Park Code ■ Access and Parking Code ■ Development Near Underground Infrastructure Code ■ Infrastructure Works Code ■ Landscape Code ■ Stormwater Management Code
Relatives Apartment	Code Assessable	■ Investigation Zone Code ■ Relatives Apartment Code ■ Development Near Underground Infrastructure Code ■ Erosion Prevention and Sediment Control Code ■ Excavation and Fill Code ■ Stormwater Management Code

Investigation Zone - Table of Assessment for Material Change of Use of Premises

column 1	column 2	column 3
Use[4.64]	**Level of Assessment**[4.65]	**Assessment Criteria**
Road	Exempt	
Roadside Stall	Code Assessable	■ Investigation Zone Code ■ Roadside Stall Code ■ Access and Parking Code ■ Development Near Underground Infrastructure Code ■ Infrastructure Works Code
Telecommunications Facility	Self-Assessable [4.66] If complying with the assessment criteria being the acceptable solutions listed in column 3 Otherwise - Impact Assessable	■ Acceptable Solutions in section 6.26.4 of the Telecommunications Facility Code ■ Acceptable Solutions in section 8.5.4 of the Development Near Underground Infrastructure Code ■ Acceptable Solution in section 8.6.4 of the Erosion Prevention and Sediment Control Coe ■ Acceptable Solutions A1.(1)(a) and (c) in section 7.6.4 of the Excavation and Fill Code
Temporary Use	Self-Assessable If complying with the assessment criteria being the acceptable solutions listed in column 3 Code Assessable If not self-assessable	■ Acceptable Solutions in section 6.27.4 of the Temporary Use Code ■ Investigation Zone Code ■ Temporary Use Code
Utility Installation	Code Assessable	■ Investigation Zone Code ■ Access and Parking Code ■ Development Near Underground Infrastructure Code ■ Erosion Prevention and Sediment Control Code ■ Excavation and Fill Code ■ Landscape Code ■ Stormwater Management Code
Defined uses not listed in column 1	Impact Assessable	
Defined uses listed in column 1 that do not comply with the level of assessment qualifications in column 2	Impact Assessable	

[4.66] If not self-assessable, a Telecommunication Facility in the Investigation Zone is impact assessable.

Investigation Zone - Table of Assessment for Material Change of Use of Premises

column 1	column 2	column 3
Use[4.64]	Level of Assessment[4.65]	Assessment Criteria
Uses not defined in Part 9 - Schedule 3 - Dictionary, Division 1 - Uses	Impact Assessable	

Investigation Zone

4.8.5 Investigation Zone - Table of Assessment for Other Development not associated with a Material Change of Use of Premises

Investigation Zone - Table of Assessment for Other Development

column 1	column 2	column 3
Other Development	**Level of Assessment**[4.67]	**Assessment Criteria**
Reconfiguration for -		
Creating lots by subdividing another lot by Standard Format Plan[4.68]	Impact Assessable	
Creating lots by subdividing another lot by - ■ Building Format Plan; or ■ Volumetric Format Plan	Code Assessable	■ Investigation Zone Code ■ Reconfiguration Code
■ Rearranging the boundaries of a lot by registering a plan of subdivision; or ■ Dividing land into parts by Agreement; or ■ Creating an easement giving access to a lot from a constructed road	Code Assessable	■ Reconfiguration Code
Building Work for -		
Communications Structures	Exempt If minor building work[4.69] Self-Assessable If - (1) Not exempt; (2) Complying with the assessment criteria being the acceptable solutions listed in column 3 Code Assessable If not self-assessable	■ Acceptable Solutions in section 7.2.4 of the Communications Structures Code ■ Communications Structures Code

[4.67] See Schedule 3 - Dictionary, Division 2 - Administrative Terms for a definition of level of assessment.
[4.68] Whether or not having a Community Management Statement.
[4.69] See Schedule 3 - Dictionary, Division 2 - Administrative Terms for a definition of minor building work

Investigation Zone - Table of Assessment for Other Development

column 1	column 2	column 3
Other Development	**Level of Assessment**[4.67]	**Assessment Criteria**
Domestic Additions	Exempt If minor building work[4.69] Self-Assessable If - (1) Not exempt; (2) Complying with the assessment criteria being the acceptable solutions listed in column 3 **Note -** Non-compliance with the acceptable solutions for self assessable development in relation to setbacks, site cover and built to boundary walls, or nominated "Alternative Provisions" or Building Assessment Provisions identified in the Domestic Additions Code will not elevate the level of assessment of a proposal from self assessable development to assessable development under the Redlands Planning Scheme. Refer to section 7.3.2 of the Domestic Additions Code. Code Assessable If not self-assessable	■ Acceptable Solutions in section 7.3.5 of the Domestic Additions Code ■ Acceptable Solutions in section 8.5.4 of the Development Near Underground Infrastructure Code ■ Acceptable Solution in section 8.6.4 of the Erosion Prevention and Sediment Control Code ■ Acceptable Solutions A1.(1)(a) and(c) in section 7.6.4 of the Excavation and Fill Code ■ Investigation Zone Code ■ Domestic Additions Code ■ Development Near Underground Infrastructure Code ■ Erosion Prevention and Sediment Control Code ■ Excavation and Fill Code ■ Infrastructure Works Code ■ Stormwater Management Code
Domestic Outbuilding	Exempt If minor building work[4.69] Self-Assessable If - (1) Not exempt; (2) Complying with the assessment criteria being the acceptable solutions listed in column 3	■ Acceptable Solutions in section 7.5.5 of the Domestic Outbuilding Code ■ Acceptable Solutions in section 8.5.4 of the Development Near Underground Infrastructure Code ■ Acceptable Solutions in section 8.6.4 of the Erosion Prevention and Sediment Control Code ■ Acceptable Solutions A1(1)(a) and(c) in section 7.6.4 of the Excavation and Fill Code

Investigation Zone - Table of Assessment for Other Development

column 1	column 2	column 3
Other Development	**Level of Assessment**[4.67]	**Assessment Criteria**
	Note - Non-compliance with the acceptable solutions for self assessable development in relation to setbacks, site cover and built to boundary walls, or nominated "Alternative Provisions" or Building Assessment Provisions identified in the Domestic Outbuilding Code will not elevate the level of assessment of a proposal from self assessable development to assessable development under the Redlands Planning Scheme. Refer to section 7.5.2 of the Domestic Outbuilding Code. Code Assessable If not self-assessable	■ Investigation Zone Code ■ Domestic Outbuilding Code ■ Development Near Underground Infrastructure Code ■ Erosion Prevention and Sediment Control Code ■ Excavation and Fill Code
On-site raising or relocation of an existing dwelling unit	Self-Assessable If complying with the assessment criteria being the acceptable solutions listed in column 3 **Note -** Non-compliance with the acceptable solutions for self assessable development in relation to setbacks, site cover and built to boundary walls, or nominated "Alternative Provisions" or Building Assessment Provisions identified in the On-site Raising or Relocation Code will not elevate the level of assessment of a proposal from self assessable development to assessable development under the Redlands Planning Scheme. Refer to section 7.7.2 of the On-site Raising or Relocation Code.	■ Acceptable Solutions in section 7.7.5 of the On-Site Raising or Relocation Code ■ Acceptable Solutions in section 8.5.4 of the Development Near Underground Infrastructure Code ■ Acceptable Solution in Section 8.6.4 of the Erosion Prevention and Sediment Control Code ■ Acceptable Solutions A1.(1)(a) and(c) in section 7.6.4 of the Excavation and Fill Code

Investigation Zone - Table of Assessment for Other Development

column 1	column 2	column 3
Other Development	**Level of Assessment**[4.67]	**Assessment Criteria**
	Code Assessable If not self-assessable	■ Investigation Zone Code ■ On-Site Raising and Relocation Code ■ Development Near Underground Infrastructure Code ■ Erosion Prevention and Sediment Control Code ■ Excavation and Fill Code ■ Infrastructure Works Code ■ Stormwater Management Code
Private Swimming Pool	Self-Assessable If complying with the assessment criteria being the acceptable solutions listed in column 3 **Note -** Non-compliance with the acceptable solutions for self assessable development in relation to setbacks, and access and parking, or nominated "Alternative Provisions" or Building Assessment Provisions identified in the Private Swimming Pool Code will not elevate the level of assessment of a proposal from self assessable development to assessable development under the Redlands Planning Scheme. Refer to section 7.8.2 of the Private Swimming Pool Code. Code Assessable If not self-assessable	■ Acceptable Solutions in section 7.8.5 of the Private Swimming Spool Code ■ Private Swimming Pool Code ■ Development Near Underground Infrastructure Code ■ Erosion Prevention and Sediment Control Code ■ Excavation and Fill Code
Private Tennis Court	Self-Assessable If complying with the assessment criteria being the acceptable solutions listed in column 3 Code Assessable If not self-assessable	■ Acceptable Solutions in section 7.9.4 of the Private Tennis Court Code ■ Private Tennis Court Code ■ Excavation and Fill Code ■ Landscape Code

Investigation Zone - Table of Assessment for Other Development

column 1	column 2	column 3
Other Development	**Level of Assessment**[4.67]	**Assessment Criteria**
Operational Work for -		
Constructing a Domestic Driveway Crossover	Self-Assessable If complying with the assessment criteria being the acceptable solutions listed in column 3 Code Assessable If not self-assessable	■ Acceptable Solutions in section 7.4.4 of the Domestic Driveway Crossover Code ■ Domestic Driveway Crossover Code
Excavation and Fill	Exempt If - (1) Disturbing less than 50m^3 of soil; (2) A height/depth not exceeding 300mm measured from ground level Self-Assessable If - (1) Not exempt; (2) Complying with the assessment criteria being the acceptable solutions listed in column 3 Code Assessable If not self-assessable	■ Acceptable Solution in section 8.6.4 of the Erosion Prevention and Sediment Control Code ■ Acceptable Solutions A1.(1)(b),(c),(d) in section 7.6.4 of the Excavation and Fill Code ■ Erosion Prevention and Sediment Control Code ■ Excavation and Fill Code
Placing an Advertising Device on Premises	Self-Assessable If complying with the assessment criteria being the acceptable solutions listed in column 3 Code Assessable If not self-assessable	■ Acceptable Solutions in section 7.1.4 of the Advertising Devices Code ■ Advertising Devices Code
Operational Work for Reconfiguring a Lot (by Standard Format Plan)	Code Assessable	■ Reconfiguration Code ■ Development Near Underground Infrastructure Code ■ Erosion Prevention and Sediment Control Code ■ Excavation and Fill Code ■ Infrastructure Works Code ■ Landscape Code ■ Stormwater Management Code

Investigation Zone - Table of Assessment for Other Development

column 1	column 2	column 3
Other Development	**Level of Assessment[4.67]**	**Assessment Criteria**
Private Waterfront Structures	Code Assessable	■ Private Waterfront Structure Code ■ Development Near Underground Infrastructure Code ■ Erosion Prevention and Sediment Control Code ■ Excavation and Fill Code
All other development not listed in column 1	Exempt	

4.8.6 Compliance with Investigation Zone Code

(1) Development that is consistent with the specific outcomes in section 4.8.7 complies with the Investigation Zone Code.

Note -

The following planning scheme policies will assist in achieving specific outcomes within the Investigation Zone Code -

- Planning Scheme Policy 2 - Community Consultation;
- Planning Scheme Policy 4 - Ecological Impact;
- Planning Scheme Policy 5 - Environmental Emissions;
- Planning Scheme Policy 9 - Infrastructure Works;
- Planning Scheme Policy 11 - Rural Lands and Uses.

4.8.7 Overall Outcomes for Investigation Zone

(1) The overall outcomes are the purpose of the Investigation Zone Code.

Note -

The zone comprises an area of the City located at the southern extremity of the Redland urban area, between the coastline and the Koala Conservation Area. The *SEQ Regional Plan 2005-2026* includes all land contained in the zone within the Investigation Area regional land use category. Before development of the Southern Redland Bay area could proceed, a number of specific issues need to be resolved including the -

- Optimum and most suitable use of the land;
- Form and intensity of development;
- Impact on the adjacent area of scenic and conservation value;
- Protection and full public access to the coastline and the bay;
- Impact on external infrastructure.

The *SEQ Regional Plan* indicates that, if suitable, development of the Southern Redland Bay area is not anticipated to proceed until 2010-2015. In addition to the specific requirements for the Southern Redland Bay area, the *SEQ Regional Plan* also identifies generic criteria for the Investigation Area regional land use category which must be satisfied prior to urban development taking place, these include -

- A detailed study has been undertaken to determine potential development opportunities and constraints;
- The proposed development is demonstrated to be consistent with the intent of the Regional Plan;
- There is a clearly demonstrated public need for the development;
- Significant environmental values, open space corridor and inter-urban breaks are identified and protected;
- Major transport and infrastructure corridors are identified and protected;
- Land for the proposed development has been formally incorporated into the Urban Footprint, with the balance area included in appropriate regional land use categories;
- A structure plan has been developed setting out the overall intent of the proposed development;
- Appropriate State Infrastructure Agreement(s) have been finalised;
- The relevant local government planning scheme is amended followed by development approval being obtained.

  The Investigation Zone will protect the Southern Redland Bay area from fragmentation and intervening inappropriate uses until such time as the studies and investigations are requested by the *SEQ Regional Plan* are conducted and completed.

(2) The overall outcomes sought for the Investigation Zone Code are described by five key characteristics[4.70] -

(a) Uses and Other Development;
(b) Built Form and Density;
(c) Amenity;
(d) Environment;
(e) Infrastructure.

Each of these is detailed below.

(a) Uses and Other Development

(i) Provide for a limited range of uses that -
a. protect the productive traditional rural activities that rely on the use of the land;
b. maintain the current low-intensity and open character of the land;
c. provide for a rural lifestyle with detached housing on existing individual lots;
d. restrict development, including reconfiguration, until such time as the suitability or otherwise of the land for possible future urban purposes is established.

(b) Built Form and Density

(i) The scale of uses and other development contributes positively to the maintenance of a rural landscape setting by -
a. limiting building height to maintain a low-rise appearance;
b. protecting the open landscape and Moreton Bay setting;
c. ensuring buildings have recognisable elements in relation to siting, width, depth and bulk that are consistent with lot size and the rural landscape setting;
(ii) The density of uses and other development are characterised by a predominance of land being used for rural purposes and associated structures on large lots;
(iii) Buildings incorporate a mix of materials that are responsive to local conditions and styles.

(c) Amenity

(i) Uses and other development achieve a high standard of rural amenity by -
a. protecting and enhancing places of cultural significance or landscape value;
b. having access to natural light and ventilation, privacy and private open space commensurate with the use;
c. providing a landscape setting that complements the rural nature of development;
d. mitigating impacts associated with light, noise, air and traffic to a level commensurate to a rural environment.

(ii) Uses are compatible with the maintenance of a high standard of rural amenity that is characterised by -
a. the retention of scenic landscapes and vistas, including productive rural land, bushland, waterways and Moreton Bay;
b. buildings and other structures minimising visual impacts on the rural landscape setting.

(d) Environment

(i) Uses and other development minimise adverse impacts on environmental and scenic values by -
a. responding to topographical features;
b. minimising the need for excavation and fill;
c. protecting the site from erosion;
d. maximising the retention of native plants;
e. maximising the use of planting species that are native and characteristic to the area;
f. protecting, managing and enhancing environmental corridors;
g. incorporating best practice stormwater management and enhancing water quality.

[4.70] In combination, the overall outcomes in section 4.8.7 (2)(a)-(e) define the character of the Investigation Zone.

(e) Infrastructure

(i) Uses and other development -
a. make efficient use of existing infrastructure;
b. do not result in unacceptable risk to community infrastructure.

(ii) Uses and other development are serviced by infrastructure including -
a. reticulated water or adequate potable water supply;
b. wastewater treatment systems which treat and dispose of wastewater on-site subject to site, soil and locational constraints;
c. constructed roads that are low-impact and that provide all weather access;
d. stormwater management;
e. energy;
f. telecommunications;
g. waste and recycling collection.

4.8.8 Specific Outcomes and Probable Solutions applicable to Assessable Development

Assessable Development			
Specific Outcomes		**Probable Solutions**	
	Uses and Other Development -		
S1.1	Uses and other development identified as inconsistent in Table 1 are not established or undertaken in the zone.	**P1.1**	No probable solution identified.
S1.2	(1) Uses and other development include those that - (a) protect traditional rural activities such as agriculture, including horticulture and grazing; (b) maintain the current low intensity and open rural character of the land; (c) provide for a rural lifestyle with detached dwelling houses on existing individual lots.	**P1.2**	(1) No probable solution identified.
S1.3	(1) Uses and other development do not compromise the future land use potential or patterns of development of this land by - (a) contaminating land; (b) having an adverse impact on scenic values; (c) prejudicing the protection of and the opportunity for full public access to the coastline and bay.	**P1.3**	(1) No probable solution identified. **Note -** For additional assessment criteria refer to Part 6 - ■ Division 2 - Agriculture; ■ Division 5 - Bed and Breakfast; ■ Division 11 - Dwelling House; ■ Division 22 - Roadside Stall; or any other relevant Use Code.
S1.4	Reconfiguration does not result in the fragmentation of land and creation of additional lots.	**P1.4**	No probable solution identified.
	Built Form and Density -		
S2.1	(1) The height, scale and density of the use is consistent with the maintenance of a rural landscape setting in relation to - (a) height; (b) setback; (c) site coverage.	**P2.1**	(1) Buildings and structures - (a) do not exceed 8.5 metres above ground level; (b) are setback - (i) for a lot or premises less than 2 hectares - a minimum of 10 metres from all boundaries; or (ii) for a lot or premises greater than 2 hectares - a. a minimum of 20 metres from all boundaries; or b. a minimum of 10 metres from all boundaries if screened by planted

Assessable Development			
Specific Outcomes		**Probable Solutions**	
			landscaping; (c) site coverage does not exceed 2.5 percent of the area of the site.
S2.2	(1) Residential building design incorporates architectural elements that - (a) exhibit a high degree of interest through the use of colour, angles and materials; (b) include verandahs, decks, eaves, window hoods or similar elements to create shade and cast shadow; (c) promote an attractive semi-rural landscape setting; (d) provide interesting and attractive facades that contribute to the rural setting and the experience of passers-by; (2) Other uses have a functional built form typical of a rural environment.	**P2.2**	(1) No probable solution identified; (2) No probable solution identified.
	Amenity -		
S3.1	Uses and other development do not adversely impact on the cultural heritage values of a registered heritage place(s).	**P3.1**	No probable solution identified.
S3.2	(1) Artificial lighting does not result in unreasonable disturbance to any person, or activity; (2) Glare and reflection from the sun are minimised through material and glazing choice.	**P3.2**	(1) No probable solution identified; (2) No probable solution identified.
S3.3	(1) Noise generated by the use or other development is compatible with that experienced in a rural environment.	**P3.3**	(1) Noise emissions comply with the following - (a) comply with Table 2 - Noise levels at the boundary of the lot or premises, except for uses that rely on external activities such as agriculture; or (b) for an Environmentally Relevant Activity, comply with any approval issued under the *Environmental Protection Act 1994*.
S3.4	Air quality impacts are eliminated or mitigated to a level that is compatible with a rural environment.	**P3.4**	No probable solution identified. **Note -** Refer to Part 11 - Planning Scheme Policy 5 - Environmental Emissions for

Assessable Development			
Specific Outcomes		**Probable Solutions**	
			further information on noise and air quality impacts.
S3.5	Traffic movements are compatible with that experienced in a rural environment.	**P3.5**	No probable solution identified.
S3.6	(1) Buildings, uses and other development are sited to - (a) minimise visual impacts on the rural landscape setting; (b) protect native plants and waterways; (c) not compromise the future land use potential or patterns of development.	**P3.6**	(1) No probable solution identified.
	Environment -		
S4.1	(1) Protect the environment from impacts associated with the use or other development including - (a) stormwater run-off; (b) water quality; (c) erosion and sediment run-off; (d) weed infestation.	**P4.1**	(1) No probable solution identified.
S4.2	(1) Minimise the need for excavation and fill by uses and other development being located and designed to - (a) prevent the unnecessary removal of native plants; (b) protect overland drainage flows; (c) reduce erosion and sediment run-off; (d) protect the amenity of adjoining properties and future land uses; (e) not impede the movement of native animals.	**P4.2**	(1) No probable solution identified. **Note -** Refer to Part 8 - Division 7 - Infrastructure Works for specific assessment criteria.
S4.3	(1) Landscaping and revegetation - (a) incorporates plants that are native to the local area; (b) recognises and enhances the semi-rural landscape setting; (c) supports the retention and rehabilitation of enhancement areas and corridors, (d) maximises use of permeable surfaces and landscaping to reduce stormwater run-off; (e) incorporates landscaping as a component of the stormwater management system.	**P4.3**	(1) Species used for landscaping and revegetation are selected from the native plant species listed in Part 9 - (a) Schedule 10 - Vegetation Species List; (b) Schedule 9 - Street Trees for landscaping within the road reserve. **Note -** For additional assessment criteria, refer to Part 8 - ■ Division 8 - Landscape Code;

Assessable Development			
Specific Outcomes		**Probable Solutions**	
			■ Division 9 - Stormwater Management Code.
	Infrastructure -		
S5.1	(1) Uses and other development are provided with - (a) reticulated water; or (b) an adequate potable water supply where the site is not able to be serviced by reticulated water.	**P5.1**	(1) Where connection to a reticulated water supply system is not available, dwellings are provided with potable water supply capacity of at least 20,000 litres.
S5.2	(1) Uses and other development are provided with - (a) wastewater disposal systems that - (i) treat and dispose of wastewater on-site subject to site soil and locational constraints; (ii) reduces the potential for - a. contaminating groundwater, surface water or wetland environments; b. risks to reticulated water supply and public health; (b) stormwater management systems that - (i) utilise existing overland systems; (ii) incorporate measures to reduce stormwater run-off quantity and improve stormwater quality; (c) constructed road access that minimise removal of native plants and the concentration of stormwater run-off; (d) energy; (e) telecommunications; (f) waste and recycling collection facilities.	**P5.2**	(1) No probable solution identified.
S5.3	(1) Waste and recycling is managed to minimise impacts on the environment and nearby premises by - (a) locating waste and recycling storage areas to protect amenity and to provide safe manual handling of containers; (b) screening waste and recycling container storage areas from view; (c) providing for the cleansing of containers in a manner that	**P5.3**	(1) No probable solution identified. (2) No probable solution identified. (3) No probable solution identified. **Note -** Refer to Part 11 - Planning Scheme Policy 9 - Infrastructure Works – Chapter 16 – Waste Management for further information on waste and recycling container volume, storage, servicing, screening and cleansing. Refer to Part 8 - Division 1 - Access

Assessable Development			
Specific Outcomes		**Probable Solutions**	
	does not cause adverse environmental impacts; (2) Uses and other development - (a) provide safe and efficient manoeuvring for waste collection vehicles; (b) ensure all bulk waste and recycling containers are serviced off-street and not on roads with public access; (c) ensure sufficient vertical clearance for container servicing; (d) ensure unobstructed access to containers by collection vehicles; (3) Waste and recycling storage is designed and located to - (a) provide adequate container volume to contain the waste and recyclables; (b) provide recycle containers in an equivalent or greater volume to waste containers; (c) provide a dedicated waste and recycling container storage area that is convenient and safe to use; (d) ensure containers are located on impermeable surfaces.		and Parking Code for waste collection vehicle servicing and manoeuvring assessment criteria.
S5.4	Community infrastructure is able to function effectively during and immediately after flood events.	**P5.4**	Community infrastructure is located at or above the recommended flood levels in Table 3 - Recommended Flood Levels for Community Infrastructure.

Table 1 - Inconsistent Uses and Other Development

Inconsistent Uses
Aged Persons and Special Needs Housing
Airport
Apartment Building
Brothel
Bulky Goods Showroom
Car Wash Facility
Cemetery
Child Care Centre
Commercial Office
Display and Sale Activity
Drive Through Restaurant
Dual Occupancy
Education Facility
Extractive Industry
Forestry
Funeral Parlour
General Industry
Health Care Centre
Heavy Industry

Inconsistent Uses
High Impact Industry
Hospital
Hotel
Indoor Recreation Facility
Institution
Intensive Agriculture
Marine Services
Mobile Home Park
Multiple Dwelling
Night Club
Outdoor Dining
Outdoor Recreation Facility
Passenger Terminal
Place of Worship
Refreshment Establishment
Retail Warehouse
Service Industry
Service Station
Shop
Small Lot House
Tourist Park
Vehicle Depot
Vehicle Parking Station
Vehicle Repair Premises
Veterinary Surgery
Warehouse
Inconsistent Other Development
Creating lots by subdividing another lot by a Standard Format Plan (whether or not having a Community Management Statement)

Table 2 - Noise levels at the boundary of the lot or premises for agricultural or other productive rural uses

Period	Noise level at the boundary of the lot or premises[1]
7am - 10pm	Background noise level plus 8 dB(A)
10pm - 7am	Background noise level plus 5 dB(A)

Note[1] - Measured as the adjusted maximum sound pressure level $L_{Amax,adj,T}$. as defined in the *Noise Measurement Manual* (Environmental Protection Agency, 2000)

Table 3 - Recommended Flood Levels for Community Infrastructure

Type of Community Infrastructure	Recommended Flood Level AEP (ARI)
Emergency services, other than police facilities	0.2% (1 in 500 year ARI)
Emergency shelters	0.5% (1 in 200 year ARI)
Police facilities	0.5% (1 in 200 year ARI)
Hospitals and associated facilities	0.2% (1 in 500 year ARI)
Stores of valuable records or items of historic or cultural significance such as galleries and libraries	0.5% (1 in 200 year ARI)
Power stations	0.2% (1 in 500 year ARI)
Major switch yards	0.2% (1 in 500 year ARI)
Substations	0.5% (1 in 200 year ARI)
Sewerage treatment plants	1% (1 in 100 year ARI)
Water treatment plants	0.5% (1 in 200 year ARI)
■ State-controlled roads ■ Works of an electricity entity not otherwise listed in this table ■ Railway lines, stations and associated facilities ■ Aviation facilities ■ Communication network facilities	No specific recommended flood level but development proponents should ensure that the infrastructure is optimally located and designed to achieve suitable levels of service, having regard to the processes and policies of the administering government agency.

Reference - *State Planning Policy Guideline 1/03: Mitigating the Adverse Impacts of Flood, Bushfire and Landslide.*

Division 9 - Island Industry Zone

4.9.1 Introduction

(1) This division contains the provisions for the Island Industry Zone. They are -

(a) The Island Industry Zone Tables of Assessment, that incorporates -
- (i) Levels of assessment for development in the Island Industry Zone (section 4.9.2);
- (ii) Assessment criteria for development in the Island Industry Zone (section 4.9.3);
- (iii) Island Industry Zone - Table of Assessment for Material Change of Use of Premises (section 4.9.4);
- (iv) Island Industry Zone - Table of Assessment for Other Development not associated with a Material Change of Use of Premises (section 4.9.5).

(b) The Island Industry Zone Code, that incorporates -
- (i) Compliance with the Island Industry Zone Code (section 4.9.6);
- (ii) Overall Outcomes for the Island Industry Zone Code (section 4.9.7);
- (iii) Specific Outcomes and Probable Solutions applicable to Assessable Development (section 4.9.8).

4.9.2 Levels of assessment for development in the Island Industry Zone

(1) Sections 4.9.4 and 4.9.5 identify the level of assessment for development in the Island Industry Zone, as follows -

(a) section 4.9.4 Island Industry Zone - Table of Assessment for Making a Material Change of Use of Premises[4.71] -
- (i) column 1 identifies uses that are exempt, self-assessable or assessable;
- (ii) column 2 identifies the level of assessment for the uses listed in column 1;
- (iii) the use is impact assessable where -
  - a. it is defined in Part 9 - Schedule 3 - Dictionary, Division 1 - Uses and is not listed in column 1; or
  - b. it is listed in column 1 and does not comply with the level of assessment qualifications listed in column 2; or
  - c. it is not defined in Part 9 - Schedule 3 - Dictionary, Division 1 - Uses.

(b) section 4.9.5 Island Industry Zone - Table of Assessment for Other Development not associated with a Material Change of Use of Premises -
- (i) column 1 identifies other development that is exempt, self-assessable or assessable;
- (ii) column 2 identifies the level of assessment for other development listed in column 1;
- (iii) where the other development is not listed in column 1 it is exempt.

(2) Overlays may alter the level of assessment identified in (1)(a) and (b)[4.72].

[4.71] Works associated with an application for a material change of use of premises may be assessed together with the material change of use.

[4.72] Refer to Part 5 - Overlays to determine the level of assessment for the use or other development where an Overlay affects the lot and Part 1, section 1.2.5(10)(f) that explains how the highest level of assessment applies.

4.9.3 Assessment criteria for development in the Island Industry Zone

(1) Development in the Island Industry Zone is assessed against the assessment criteria listed in column 3 of sections 4.9.4 and 4.9.5, as follows -

(a) acceptable solutions of applicable codes for self-assessable development; or

(b) applicable codes for code assessable development.

(2) Self-assessable development that does not comply with all the acceptable solutions of the applicable codes is assessable development.

(3) Impact assessable development will be assessed against all relevant provisions of the Redlands Planning Scheme.

Note -

- The level of assessment indicated within section 4.9.4 - Island Industry Zone - Table of Assessment for Material Change of Use of Premises may be affected by Division 2 of the Regulatory Provisions of the *SEQ Regional Plan 2005-2026.*
- The level of assessment for reconfiguration as indicated within section 4.9.5 - Island Industry Zone -Table of Assessment for Other Development not associated with a Material Change of Use of Premises, where within the Regional Landscape and Rural Production Area or Investigation Area of the *SEQ Regional Plan 2005-2026* -
  - complies with Division 3 of the Regulatory Provisions;
  - has a minimum lot size of 100 hectares, unless the subdivision meets an exclusion documented in Division 3.

4.9.4 Island Industry Zone - Table of Assessment for Material Change of Use of Premises

Island Industry Zone - Table of Assessment for Material Change of Use of Premises

column 1	column 2	column 3
Use[4.73]	**Level of Assessment**[4.74]	**Assessment Criteria**
Caretakers Dwelling	Code Assessable	■ Island Industry Zone Code ■ Caretakers Dwelling Code
Car Wash Facility	Code Assessable	■ Island Industry Zone Code ■ Access and Parking Code ■ Development Near Underground Infrastructure Code ■ Erosion Prevention and Sediment Control Code ■ Excavation and Fill Code ■ Infrastructure Works Code ■ Landscape Code ■ Stormwater Management Code
Emergency Services	Code Assessable	■ Island Industry Zone Code ■ Access and Parking Code ■ Development Near Underground Infrastructure Code ■ Erosion Prevention and Sediment Control Code ■ Excavation and Fill Code ■ Infrastructure Works Code ■ Landscape Code ■ Stormwater Management Code
Garden Centre	Self-Assessable If complying with the assessment criteria being the acceptable solutions listed in column 3 Code Assessable If not self-assessable	■ Acceptable Solutions in section 8.4.4 of the Commercial Industry Activity Code ■ Island Industry Zone Code ■ Access and Parking Code ■ Development Near Underground Infrastructure Code ■ Excavation and Fill Code ■ Erosion Prevention and Sediment Control Code ■ Infrastructure Works Code ■ Landscape Code ■ Stormwater Management Code
General Industry	Self-Assessable If - (1) Not in sub-area IS1; or (2) 400m^2 or less gross floor area; (3) Not involving chemical, coal and petroleum products and	■ Acceptable Solutions in section 8.4.4 of the Commercial Industry Activity Code

[4.73] See Schedule 3 - Dictionary, Division 1 - Uses.
[4.74] See Schedule 3 - Dictionary, Division 2 - Administrative Terms for a definition of level of assessment.

Island Industry Zone - Table of Assessment for Material Change of Use of Premises

column 1	column 2	column 3
Use[4.73]	**Level of Assessment**[4.74]	**Assessment Criteria**
	activities, or battery recycling and tyre recycling; (4) Complying with the assessment criteria being the acceptable solutions listed in column 3 Code Assessable If - (1) Not self-assessable; (2) Not in sub-area IS1; (3) Not involving chemical, coal and petroleum products and activities, or battery recycling and tyre recycling Otherwise - Impact Assessable	■ Island Industry Zone Code ■ Access and Parking Code ■ Development Near Underground Infrastructure Code ■ Erosion Prevention and Sediment Control Code ■ Excavation and Fill Code ■ Infrastructure Works Code ■ Landscape Code ■ Stormwater Management Code
Landscape Supply Depot	Self-Assessable If - (1) Not in sub-area IS1; (2) Complying with the assessment criteria being the acceptable solutions listed in column 3 Code Assessable If - (1) Not self-assessable; (2) Not in sub-area IS1 Otherwise - Impact Assessable	■ Acceptable Solutions in section 8.4.4 of the Commercial Industry Activity Code ■ Island Industry Zone Code ■ Access and Parking Code ■ Development Near Underground Infrastructure Code ■ Erosion Prevention and Sediment Control Code ■ Excavation and Fill Code ■ Infrastructure Works Code ■ Landscape Code ■ Stormwater Management Code
Minor Utility	Exempt	
Park	Self-Assessable If - (1) Being undertaken by the local government; (2) On land in the ownership or control of the local government; (3) Complying with the assessment criteria being the acceptable solutions listed in column 3	■ Acceptable Solutions in section 6.20.4 of the Park Code ■ Acceptable Solutions of section 8.5.4 of the Development Near Underground Infrastructure Code

Island Industry Zone - Table of Assessment for Material Change of Use of Premises

column 1	column 2	column 3
Use[4.73]	**Level of Assessment**[4.74]	**Assessment Criteria**
	Code Assessable If not self-assessable	■ Island Industry Zone Code ■ Park Code ■ Access and Parking Code ■ Development Near Underground Infrastructure Code ■ Infrastructure Works Code ■ Landscape Code ■ Stormwater Management Code
Road	Exempt	
Service Industry	Self-Assessable If complying with the assessment criteria being the acceptable solutions listed in column 3 Code Assessable If not self-assessable	■ Acceptable Solutions in section 8.4.4 of the Commercial Industry Activity Code ■ Island Industry Zone Code ■ Access and Parking Code ■ Development Near Underground Infrastructure Code ■ Erosion Prevention and Sediment Control Code ■ Excavation and Fill Code ■ Infrastructure Works Code ■ Landscape Code ■ Stormwater Management Code
Telecommunications Facility	Self-Assessable If complying with the assessment criteria being the acceptable solutions listed in column 3 Code Assessable If not self-assessable	■ Acceptable Solutions in section 6.26.4 of the Telecommunications Facility Code ■ Acceptable Solutions in section 8.5.4 of the Development Near Underground Infrastructure Code ■ Acceptable Solutions in section 8.6.4 of the Erosion Prevention and Sediment Control Code ■ Acceptable Solutions A1.(1)(a) and (c) in section 7.6.4 of the Excavation and Fill Code ■ Island Industry Zone Code ■ Telecommunications Facility Code ■ Access and Parking Code ■ Development Near Underground Infrastructure Code ■ Erosion Prevention and Sediment Control Code ■ Excavation and Fill Code ■ Infrastructure Works Code ■ Landscape Code
Temporary Use	Self-Assessable If complying with the assessment criteria being the acceptable solutions listed in	■ Acceptable Solutions in section 6.27.4 of the Temporary Use Code

Island Industry Zone - Table of Assessment for Material Change of Use of Premises

column 1	column 2	column 3
Use[4.73]	**Level of Assessment**[4.74]	**Assessment Criteria**
	column 3 Code Assessable If not self-assessable	■ Island Industry Zone Code ■ Temporary Use Code
Utility Installation	Code Assessable	■ Island Industry Zone Code ■ Access and Parking Code ■ Development Near Underground Infrastructure Code ■ Erosion Prevention and Sediment Control Code ■ Excavation and Fill Code ■ Landscape Code ■ Stormwater Management Code
Vehicle Depot	Self-Assessable If - (1) Not in sub-area IS1; or (2) Storing no more than 50 vehicles; (3) Complying with the assessment criteria being the acceptable solutions listed in column 3 Code Assessable If - (1) Not self-assessable; (2) Not in sub-area IS1 Otherwise - Impact Assessable	■ Acceptable Solutions in section 8.4.4 of the Commercial Industry Activity Code ■ Island Industry Zone Code ■ Access and Parking Code ■ Development Near Underground Infrastructure Code ■ Erosion Prevention and Sediment Control Code ■ Excavation and Fill Code ■ Infrastructure Works Code ■ Landscape Code ■ Stormwater Management Code
Vehicle Repair Premises	Self-Assessable If - (1) Not in sub-area IS1; (2) Complying with the assessment criteria being the acceptable solutions listed in column 3 Code Assessable If - (1) Not self-assessable; (2) Not in sub-area IS1 Otherwise - Impact Assessable	■ Acceptable Solutions in section 8.4.4 of the Commercial Industry Activity Code ■ Island Industry Zone Code ■ Access and Parking Code ■ Development Near Underground Infrastructure Code ■ Erosion Prevention and Sediment Control Code ■ Excavation and Fill Code ■ Infrastructure Works Code ■ Landscape Code ■ Stormwater Management Code

Island Industry Zone - Table of Assessment for Material Change of Use of Premises

column 1	column 2	column 3
Use[4.73]	**Level of Assessment[4.74]**	**Assessment Criteria**
Warehouse	Self-Assessable If - (3) Not in sub-area IS1; (4) Complying with the assessment criteria being the acceptable solutions listed in column 3 Code Assessable If - (1) Not self-assessable; (2) Not in sub-area IS1 Otherwise - Impact Assessable	■ Acceptable Solutions in section 8.4.4 of the Commercial Industry Activity Code ■ Island Industry Zone Code ■ Access and Parking Code ■ Development Near Underground Infrastructure Code ■ Erosion Prevention and Sediment Control Code ■ Excavation and Fill Code ■ Infrastructure Works Code ■ Landscape Code ■ Stormwater Management Code
Defined uses not listed in column 1	Impact Assessable	
Defined uses listed in column 1 that do not comply with the level of assessment qualifications in column 2	Impact Assessable	
Uses not defined in Part 9 - Schedule 3 - Dictionary, Division 1 - Uses	Impact Assessable	

4.9.5 Island Industry Zone - Table of Assessment for Other Development not associated with a Material Change of Use of Premises

Island Industry Zone - Table of Assessment for Other Development

column 1	column 2	column 3
Other Development	**Level of Assessment**[4.75]	**Assessment Criteria**
Reconfiguration for -		
Creating lots by subdividing another lot by Standard Format Plan[4.76]	Code Assessable	■ Island Industry Zone Code ■ Reconfiguration Code ■ Development Near Underground Infrastructure Code ■ Excavation and Fill Code ■ Infrastructure Works Code ■ Stormwater Management Code
Creating lots by subdividing another lot by - ■ Building Format Plan; or ■ Volumetric Format Plan	Code Assessable	■ Island Industry Zone Code ■ Reconfiguration Code
■ Rearranging the boundaries of a lot by registering a plan of subdivision; or ■ Dividing land into parts by Agreement; or ■ Creating an easement giving access to a lot from a constructed road.	Code Assessable	■ Reconfiguration Code
Building Work for -		
Communications Structures	Exempt If minor building work[4.77] Self-Assessable If - (1) Not exempt; (2) Complying with the assessment criteria being the acceptable solutions listed in column 3 Code Assessable If not self-assessable	■ Acceptable Solutions in section 7.2.4 of the Communications Structures Code ■ Communications Structures Code

[4.75] See Schedule 3 - Dictionary, Division 2 - Administrative Terms for a definition of level of assessment.
[4.76] Whether or not having a Community Management Statement.
[4.77] See Schedule 3 - Dictionary, Division 2 - Administrative Terms for a definition of minor building work.

Island Industry Zone - Table of Assessment for Other Development

column 1	column 2	column 3
Other Development	**Level of Assessment[4.75]**	**Assessment Criteria**
Domestic Additions	Exempt If minor building work[4.77] Code Assessable If - (1) Not exempt; (2) The building height is - (a) 8.5 metres or less above ground level; (b) 2 storey or less; (3) The additions do not involve built to boundary walls Otherwise - Impact Assessable	■ Island Industry Zone Code ■ Domestic Additions Code ■ Development Near Underground Infrastructure Code ■ Erosion Prevention and Sediment Control Code ■ Excavation and Fill Code ■ Stormwater Management Code
Domestic Outbuilding	Exempt If minor building work[4.77] Code Assessable If not exempt	■ Island Industry Zone Code ■ Domestic Outbuilding Code ■ Development Near Underground Infrastructure Code ■ Erosion Prevention and Sediment Control Code ■ Excavation and Fill Code
On-site raising or relocation of an existing dwelling unit	Code Assessable If - (1) The building height is - (a) 8.5 metres or less above ground level; (b) 2 storey or less; (2) The relocation does not result in built to boundary walls Otherwise - Impact Assessable	■ Island Industry Zone Code ■ On-Site Raising and Relocation Code ■ Development Near Underground Infrastructure Code ■ Erosion Prevention and Sediment Control Code ■ Excavation and Fill Code ■ Infrastructure Works Code ■ Stormwater Management Code
Private Swimming Pool	Code Assessable	■ Island Industry Zone Code ■ Private Swimming Pool Code ■ Development Near Underground Infrastructure Code ■ Erosion Prevention and Sediment Control Code ■ Excavation and Fill Code

Island Industry Zone - Table of Assessment for Other Development

column 1	column 2	column 3
Other Development	**Level of Assessment**[4.75]	**Assessment Criteria**
Private Tennis Court	Code Assessable	■ Island Industry Zone Code ■ Private Tennis Court Code ■ Erosion Prevention and Sediment Control Code ■ Excavation and Fill Code ■ Landscape Code
Operational Work for -		
Constructing a Domestic Driveway Crossover	Self-Assessable If complying with the assessment criteria being the acceptable solutions listed in column 3 Code Assessable If not self-assessable	■ Acceptable Solutions in section 7.4.4 of the Domestic Driveway Crossover Code ■ Domestic Driveway Crossover Code
Excavation and Fill	Exempt If - (1) Disturbing less than 50m^3 of soil; (2) A height/depth not exceeding 300mm measured from ground level Self-Assessable If - (1) Not exempt; (2) Complying with the assessment criteria being the acceptable solutions listed in column 3 Code Assessable If not self-assessable	■ Acceptable Solution in section 8.6.4 of the Erosion Prevention and Sediment Control Code ■ Acceptable Solutions A1.(1)(b),(c),(d) in section 7.6.4 of the Excavation and Fill Code ■ Erosion Prevention and Sediment Control Code ■ Excavation and Fill Code
Placing an Advertising Device on Premises	Self-Assessable If complying with the assessment criteria being the acceptable solutions listed in column 3 Code Assessable If not self-assessable	■ Acceptable Solutions in section 7.1.4 of the Advertising Devices Code ■ Advertising Devices Code

Island Industry Zone - Table of Assessment for Other Development

column 1	column 2	column 3
Other Development	**Level of Assessment[4.75]**	**Assessment Criteria**
Operational Work for Reconfiguring a Lot (by Standard Format Plan)	Code Assessable	■ Reconfiguration Code ■ Development Near Underground Infrastructure Code ■ Erosion Prevention and Sediment Control Code ■ Excavation and Fill Code ■ Infrastructure Works Code ■ Landscape Code ■ Stormwater Management Code
Private Waterfront Structure	Code Assessable	■ Island Industry Zone Code ■ Private Waterfront Structure Code ■ Development Near Underground Infrastructure Code ■ Erosion Prevention and Sediment Control Code ■ Excavation and Fill Code
All other development not listed in column 1	Exempt	

4.9.6 Compliance with Island Industry Zone Code

(1) Development that is consistent with the specific outcomes in section 4.9.8 complies with the Island Industry Zone Code.

Note -

The following planning scheme policies will assist in achieving specific outcomes in the Island Industry Zone Code -
- Planning Scheme Policy 5 - Environmental Emissions;
- Planning Scheme Policy 9 - Infrastructure Works.

4.9.7 Overall Outcomes for Island Industry Zone Code

(1) The overall outcomes are the purpose of the Island Industry Zone Code.

(2) The overall outcomes sought for the Island Industry Zone Code are described by five key characteristics[4.78] -

(a) Uses and Other Development;
(b) Built Form and Density;
(c) Amenity;
(d) Environment;
(e) Infrastructure.

Each of these is detailed below.

(a) Uses and Other Development

(i) Provide for small-scale non-intrusive service industrial uses and a limited range of general industry uses that -
a. directly support the Islands' community by satisfying the needs of residents in terms of access to services;
b. do not have significant off-site impacts or involve outdoor dismantling of vehicles, machinery or other goods;
c. support the role and function of Island centres, while not undermining the retail and commercial functions of these centres;
d. provide local employment opportunities.

(ii) Sub-area IS1 - is identified at specific locations to provide a limited range of industrial uses that-
a. do not hinder the future development and operation of a school on the adjoining Community Purposes Zone sub-area CP3 - Education Facility on Russell Island;
b. do not detrimentally impact on the amenity of -
- the Point Lookout Tourist Zone sub-area PT7 in George Nothling Drive;
- the Urban Residential Zone and Conservation Zone at Amity, North Stradbroke Island.

(iii) Reconfiguration of existing lots improves the function of the zone and minimises off-site impacts.

(iv) Other development does not compromise uses and associated activities expected in the zone.

(b) Built Form and Density

(i) The scale of uses and other development achieve a high standard of built form that -
a. contributes to a built form that is sympathetic to the natural environment and topography of the land;

[4.78] In combination, the overall outcomes in section 4.9.7 (2)(a)-(e) define the character of the Island Industry Zone.

b. complements the scale of surrounding buildings by maintaining a low-rise appearance;
c. limits the bulk of buildings to ensure they are in proportion to lot size.

(ii) Uses and other development have a site layout that -
a. utilise land efficiently;
b. minimise noise generation and other adverse impacts;
c. provide sufficient area for employee and customer car parking, landscaping, on-site wastewater disposal, stormwater systems and service areas;
d. provide for vehicle access, parking, manoeuvring and loading/unloading areas;
e. contribute to security of property and safety of people;
f. provide for bicycle access to the site including parking and storage;
g. where in sub-area IS1 provide sufficient space for on-site landscaping and buffering treatments.

(iii) Building architecture and style maintains the low-key industrial built form.

(c) Amenity

(i) Uses and other development achieve a high standard of environmental amenity by -
a. providing extensive landscaping that incorporates native plants to ensure built form integrates with the Islands landscaped setting;
b. mitigating impacts associated with light, noise and air, among other emissions;
c. utilising best practice techniques and operations to minimise adverse impacts associated with stormwater run-off and other potentially water or soil contaminating substances;
d. minimising visual clutter associated with fencing and signage along all street frontages.

(d) Environment

(i) The scale and operational attributes of uses and other development minimise adverse impacts on environmental values by -
a. responding to topographical features;
b. limiting the need for excavation and fill;
c. protecting the site from erosion;
d. retaining native plants;
e. maximising the use of plant species that are native to the area;
f. incorporating best practice stormwater management and enhancing water quality;
g. in sub-area IS1 at George Nothling Drive, Point Lookout the land is not released until an environmental impact statement is undertaken.

(e) Infrastructure

(i) Uses and other development -
a. make efficient use of existing infrastructure;
b. provide for the extension of infrastructure in an orderly and cost effective manner through appropriate staging that is tailored to the specific needs of each island;
c. do not result in unacceptable risk to community infrastructure.

(ii) Uses and other development within the zone are serviced by infrastructure including -
a. reticulated water;
b. stormwater drainage that maximises use and protection of natural drainage systems;
c. energy;
d. telecommunications;
e. low impact road systems that minimise impact on native plants and natural drainage systems;
f. on-site sewerage systems that ensure wastewater is treated and disposed of on-site subject to site, soil and locational constraints.

(iii) Uses manage the generation, storage and disposal of waste to a standard commensurate with the operational activities of the use.

(iv) Uses and other development provide on-site cycling facilities.

4.9.8 Specific Outcomes and Probable Solutions applicable to Assessable Development

Assessable Development			
Specific Outcomes		**Probable Solutions**	
	Uses and Other Development -		
S1.1	Uses identified as inconsistent in Table 1 are not established in the zone.	**P1.1**	No probable solution identified.
S1.2	General industry uses involving chemical, coal and petroleum products and activities, and battery and tyre recycling are not established in the zone.	**P1.2**	No probable solution identified.
S1.3	(1) Service industry uses and a limited range of general industry uses that are small-scale and non-intrusive provide for the repair, servicing, assembling and making of products that - (a) directly support the Islands' community by satisfying the needs of residents in terms of access to services; (b) do not have significant off-site impacts or involve the outdoor dismantling of vehicles, machinery or other goods; (c) support the role and function of Island centres, while not undermining the retail and commercial functions of these centres; (d) provide local employment opportunities; (2) In sub-area IS1 - the range of uses is limited so that they do not - (a) hinder the future development and operation of a school on the adjoining Community Purposes Zone sub-area CP 3 - Education Facility on Russell Island; (b) detrimentally affect the amenity of the Point Lookout Tourist Zone sub-area PT7 on George Nothling Drive and the Urban Residential and Conservation Zones at Amity, North Stradbroke Island.	**P1.3**	(1) No probable solution identified; (2) No probable solution identified.
S1.4	Other development does not hinder the ongoing operation and future economic opportunities of industrial uses expected in the zone.	**P1.4**	No probable solution identified.

Assessable Development			
Specific Outcomes		**Probable Solutions**	
S1.5	Reconfiguration of existing lots improves the function of the industrial area and minimises off-site impacts.	**P1.5**	No probable solution identified. **Note -** Refer to Part 7 - Division 11 - Reconfiguration Code for further assessment criteria.
	Built Form and Density -		
S2.1	(1) The height of buildings and structures maintains the Islands' low-key industrial built form and does not dominate the streetscape and landscape when viewed from a public place or Moreton Bay.	**P2.1**	(1) Building height is no greater than - (a) 10 metres; or (b) in sub-area IS1 - 8.5 metres along boundaries that adjoin the - (i) Community Purposes Zone sub-area CP 3 - Education Facility on Russell Island; or (ii) Point Lookout Tourist Zone sub-area PT7 in George Nothling Drive; or (iii) Urban Residential or Conservation Zones at Amity.
S2.2	(1) Site coverage of buildings balances built and unbuilt areas to - (a) facilitate the retention or reinstatement of native plants; (b) ensure adequate area for the disposal of wastewater on-site where reticulated sewerage is not available; (c) provide areas for access, parking, manoeuvring, outdoor work and service functions; (d) facilitate stormwater management.	**P2.2**	(1) Uses and other development are designed so that - (a) building site coverage is a maximum of 50 percent of the site area; (b) total development area including access, parking, service and outdoor work areas is a maximum of 85 percent of the site area; (c) planted landscaping accommodates at least 15 percent of the site area.
S2.3	(1) Setbacks for all buildings - (a) allow for the safe and efficient use of the site; (b) provide employee and customer car parking at visible locations that have easy and direct pedestrian access to building entries; (c) contribute to the built form and provide an attractive streetscape; (d) enable the effective location of overland drainage paths and utility infrastructure; (e) do not adversely affect existing and future uses of adjoining land;	**P2.3**	(1) No probable solution identified.

Assessable Development			
Specific Outcomes		Probable Solutions	
	(f) are increased where required to provide - (i) overland flow paths associated with stormwater management; (ii) other infrastructure; (iii) car parking; (iv) access to services.		
S2.4	(1) Site layout - (a) Uses the site efficiently and allocates sufficient areas for all activities related to the use; (b) locates staff parking, manoeuvring and loading/unloading areas to the side or rear of the site except in sub-area IS1 where the site adjoins - (i) the Community Purposes Zone sub-area CP3 - Education Facility on Russell Island; or (ii) Point Lookout Tourist Zone sub-area PT7 in George Nothling Drive; or (iii) Urban Residential Zone at Amity. (c) locates customer parking with direct access to the building entry; (d) provides opportunities to consolidate and co-ordinate on-site parking and service areas; (e) is designed to maximise personal safety for employees and visitors to the site; (f) in sub-area IS1 - openings are not located in walls and potential noise emitting equipment, machinery or outdoor work areas are located as far as practical from the common boundary with - (i) the Community Purposes Zone sub-area CP3 - Education Facility on Russell Island; or (ii) northern boundary adjoining the Point Lookout Tourist Zone sub-area PT7on George Nothling Drive; or (iii) or eastern boundary adjoining to the Urban Residential zone at Amity	**P2.4**	(1) No probable solution identified.

Assessable Development			
Specific Outcomes		**Probable Solutions**	
S2.5	(1) Effective architectural design is used to ensure built form - (a) maintains human scale and promotes an attractive streetscape with any entrances or other similar features orientated towards the street frontage; (b) integrates with landscape planting and prevailing landscape features; (c) incorporates articulated walls through horizontal and vertical variation, solid and void, shadow detail and colour to reduce the impact of expansive blank walls; (d) utilises non-reflective materials; (e) does not result in the overshadowing or loss of privacy to adjoining areas	**P2.5**	(1) No probable solution identified.
S2.6	Outdoor storage, loading and service areas are designed and located to minimise adverse visual impacts on the streetscape.	**P2.6**	No probable solution identified.
S2.7	Offices, showrooms and customer service areas, where in conjunction with industrial uses, are orientated towards the street.	**P2.7**	No probable solution identified.
	Amenity-		
S3.1	(1) High quality landscaping including planting, paving and other components of the landscape are provided that - (a) have regard to the proximity and location of the use to the street; (b) in sub-area IS1 - have regard to the nature and scale of the use and the need for any intensive screen planting where adjoining the - (i) Community Purposes Zone sub-area CP3 - Education Facility on Russell Island; or (ii) Point Lookout Tourist Zone sub-area PT7 on George Nothling Drive; or (iii) Urban Residential zone at Amity; (c) are sensitive to the site attributes and the surrounding landscape features;	**P3.1**	(1) Landscaping (a) incorporates - (i) a 2-metre wide planted landscaped area on the primary and secondary road frontage; (ii) in sub-area IS1 - a densely planted 2-metre wide landscaped buffer, in combination with a 2-metre high solid fence, where a lot boundary adjoins the - a. Community Purposes Zone sub-area CP3 - Education Facility on Russell Island; or b. Point Lookout Tourist Zone sub-area PT7 on George Nothling Drive; or c. Urban Residential zone at Amity; (b) reduces the visual bulk and height of buildings by -

Assessable Development			
Specific Outcomes		**Probable Solutions**	
	(d) create visual relief and shade particularly within car parking areas; (e) are used to screen outdoor storage, work and service or other obtrusive areas from public view; (f) are used to define building entrances and pedestrian paths.		(i) incorporating tree planting that will achieve a canopy spread over a minimum of 30 percent of the primary road frontage within 5 years of planting; (ii) ensuring that a minimum of 15 percent of all trees proposed are capable of growing to the height of the eaves of the building; (iii) incorporating under tree ground cover and shrub planting. **Note -** Refer to Part 8 - ■ Division 1 - Access and Parking Code for car parking landscape requirements; ■ Division 8 - Landscape Code for general landscaping requirements.
S3.2	(1) Fences and non-building walls - (a) are visually attractive and contribute to or blend with planted landscaping and building materials; (b) are designed and detailed to provide visual interest to the streetscape; (c) assist in highlighting entrances and pedestrian paths; (d) maximise safety and security; (e) in sub-area IS1 - provide an effective visual and acoustic screen to - (i) Community Purposes Zone sub-area CP3 - Education Facility on Russell Island; or (ii) Point Lookout Tourist Zone sub-area PT7 on George Nothling Drive; or (iii) Urban Residential zone at Amity.	**P3.2**	(1) Fences and non-building walls **-** (a) on the property boundary to any street frontage are not greater than 1.2 metres high; (b) at the front and side, where greater than 1.2 metres in height are - (i) erected behind the front building line rather than the property boundary of any street frontage; (ii) screened by landscaping; (c) on rear boundaries are chain wire rather than solid and a colour that blends with the surrounding built, planted or natural environment; (d) which are an extension of retaining walls or earth batters are landscaped or planted; (e) in sub-area IS1 - are 2-metres high and are supported by planted landscaping to screen views and mitigate noise impacts where adjoining - (i) Community Purposes Zone sub-area CP3 - Education Facility on Russell Island; (ii) Point Lookout Tourist Zone sub-area PT7 on George Nothling Drive; or (iii) Urban Residential Zone at Amity.

Assessable Development			
Specific Outcomes		**Probable Solutions**	
S3.3	(1) Signage clutter is minimised, especially to the external streetscape; (2) Communal signage is provided, preferably in the form of an architectural and landscaped feature.	**P3.3**	(1) No probable solution identified; (2) No probable solution identified. **Note -** Refer to Part 7 - Division 1 - Advertising Devices Code for signage assessment criteria.
S3.4	(1) Noise and vibration emissions generated by the operational activities of the use are minimised by - (a) locating and acoustically housing noise emitting plant and equipment; (b) locating, away from sensitive environments - (i) major opening in buildings; (ii) outdoor work areas.	**P3.4**	(1) Noise generated by the use - (a) complies with - (i) Table 2 - Noise levels at the boundary of the Island Industry Zone; or (ii) Table 3 - Noise levels at the boundary of the nearest residential zone; or (iii) any approval issued under the *Environmental Protection Act 1994*; (b) is minimised between 6pm and 7am Monday to Saturday, and all day Sunday by - (i) not carrying out any activities in outdoor work areas; (ii) limiting indoor activities to office and administrative tasks, and other activities that are not audible or visible from outside the building at a sensitive receiving environment located outside the zone.
S3.5	(1) Uses and other development minimise emissions of dust and odour and the generation of airborne pollutants; (2) Dust impacts of vehicle movements and stockpiling of materials are eliminated or mitigated.	**P3.5**	(1) Emissions of dust or odour and the generation of airborne pollutants do not exceed the relevant guidelines set out in Schedule 1 of the *Environmental Protection (Air) Policy 1997*; (2) No probable solution identified. **Note -** Refer to Part 11 - Planning Scheme Policy 5 - Environmental Emissions for further information on noise and air quality impacts.
S3.6	(1) Artificial lighting does not result in unreasonable disturbance to any person or activity; (2) Glare and reflection from the sun are minimised through material and glazing choice.	**P3.6**	(1) The vertical illumination resulting from direct, reflected or other incidental light emanating from the site does not exceed 8 lux when measured at any point 1.5 metres outside the boundary at or above ground level; (2) No probable solution identified.

Assessable Development			
Specific Outcomes		**Probable Solutions**	
S3.7	(1) Land contamination is minimised by - (a) ensuring storage, use and spillage of potential contaminants do not result in the contamination of the land; (b) incorporating waste storage and collection measures that protect against spillage of contaminated materials; (c) ensuring storage areas for potentially contaminating substances are roofed and located on impermeable surfaces; (d) incorporating space for accidental spill areas to be bunded and the contaminant retained on-site in an impermeable area/system, before removal by an approved means.	**P3.7**	(1) No probable solution identified.
S3.8	(1) Emissions of contaminants, including heat, radioactivity, electromagnetic radiation or the like do not cause adverse environmental impacts; (2) The use or other development does not involve radioactive or bio-hazardous - (a) materials; (b) processes.	**P3.8**	(1) No probable solutions identified; (2) No probable solutions identified.
S3.9	(1) Eliminate risk to people, property and the environment from hazards including, fire, explosion and chemical release.	**P3.9**	(1) The use is not defined in the *Dangerous Goods Safety Management Regulation 2001* as a - (a) Dangerous Goods Location or Large Dangerous Goods Location; (b) Major Hazardous Facility. **Note -** Refer to Schedule 1 and 2 of the *Dangerous Goods Safety Management Regulation 2001*.
	Environment -		
S4.1	(1) Protect the environment from impacts associated with the use or other development including - (a) stormwater run-off; (b) water quality; (c) erosion and sediment run-off; (d) weed infestation.	**P4.1**	(1) No probable solution identified.

Assessable Development			
Specific Outcomes		**Probable Solutions**	
S4.2	(1) Minimise the need for excavation and fill by uses and other development being located and designed to - (a) prevent the unnecessary removal of existing native plants; (b) protect natural drainage systems; (c) protect the amenity of adjoining properties; (d) reduce erosion and sediment run-off.	**P4.2**	(1) No probable solution is identified. **Note -** Refer to Part 7 - Division 6 - Excavation and Fill Code for assessment criteria where the site requires earthworks.
S4.3	(1) Maximise the retention or reinstatement of native vegetation within the site and adjoining road reserve.	**P4.3**	(1) Landscaping - (a) allows for retention and reinstatement of native plants in an undisturbed area that is no less than 10 percent of the site; or (b) on a cleared site ensures the reinstatement of an area of not less than 10 percent of the site with native plants; (c) utilises species from the native species listed in Part 9 - (i) Schedule 10 - Vegetation Species List; (ii) Schedule 9 - Street Trees where within the road reserve. **Note -** No vegetation is removed prior to commencement of construction without Local Government approval in accordance with Local Law 6 - Protection of Vegetation.
S4.4	(1) Landscaping - (a) maximises use of permeable surfaces to improve and reduce stormwater run-off; (b) is incorporated as a component of the stormwater management system; (c) acts as filter for stormwater run-off from car parking areas contaminated by hydrocarbons.	**P4.4**	(1) No probably solution identified. **Note -** For additional assessment criteria refer to Part 8 - ■ Division 8 - Landscape Code; ■ Division 9 - Stormwater Management Code.
S5.1	Infrastructure - Infrastructure is provided in an orderly and cost effective manner that minimises disturbance and adverse impacts on the island environment and Moreton Bay.	**S5.1**	No probable solutions identified; **Note -** Refer to Part 11 - Planning Scheme Policy 9 - Infrastructure Works.

Assessable Development			
Specific Outcomes		**Probable Solutions**	
S5.2	(1) All uses and other development are serviced by infrastructure including - (a) reticulated water; (b) reticulated sewerage; or (c) where not able to be connected to a reticulated sewerage system, wastewater - (i) is treated and disposed of on-site subject to site, soil and locational constraints; (ii) reduces the potential for - a. contaminating groundwater, surface water or wetland environments; b. risks to reticulated water supply and public health; (d) stormwater management systems that - (i) utilise existing overland flow and drainage systems; (ii) incorporates measures to reduce stormwater quantity and manage stormwater quality; (e) constructed road that minimise native tree removal and the concentration of stormwater run-off; (f) energy; (g) telecommunications; (h) waste and recycling collection facilities.	**S5.2**	(1) No probable solutions identified.
S5.3	(1) Stormwater management for the site - (a) enhances water quality at receiving waters; (b) protects waterways from potential contamination; (c) effectively provide for overland drainage flows due to large hard stand and roof areas associated with built forms in this zone.	**P5.3**	(1) Stormwater management for the site ensures that the quality of stormwater leaving the lot or premises achieves the standards detailed in Part 9 - Schedule 11 - Water Quality Objectives. **Note -** Refer to Part 8 - Division 9 - Stormwater Management Code for additional requirements on stormwater management.
S5.4	(1) Waste and recycling is managed to minimise impacts on the environment and nearby premises by - (a) locating waste and recycling storage areas to protect	**P5.4**	(1) No probable solution identified. (2) No probable solution identified. (3) No probable solution identified.

Assessable Development			
Specific Outcomes		**Probable Solutions**	
	amenity and to provide safe manual handling of containers; (b) screening waste and recycling container storage areas from view; (c) providing for the cleansing of containers in a manner that does not cause adverse environmental impacts; (2) Uses and other development - (a) provide safe and efficient manoeuvring for waste collection vehicles; (b) ensure all bulk waste and recycling containers are serviced off-street and not on roads with public access; (c) ensure sufficient vertical clearance for container servicing; (d) ensure unobstructed access to containers by collection vehicles; (3) Waste and recycling storage is designed and located to - (a) provide adequate container volume to contain the waste and recyclables; (b) provide recycle containers in an equivalent or greater volume to waste containers; (c) provide a dedicated waste and recycling container storage area that is convenient and safe to use; (d) ensure containers are located on impermeable surfaces.		**Note -** Refer to Part 11 - Planning Scheme Policy 9 - Infrastructure Works – Chapter 16 – Waste Management for further information on waste and recycling container volume, storage, servicing, screening and cleansing. Refer to Part 8 - Division 1 - Access and Parking Code for waste collection vehicle servicing and manoeuvring assessment criteria.
S5.5	Community infrastructure is able to function effectively during and immediately after food events.	**P5.5**	Community infrastructure is located at or above the recommended flood levels in Table 4 - Recommended Flood Levels for Community Infrastructure.
S5.6	Uses and other development provide bicycle access to and within the site, and secure and convenient bicycle parking or storage.	**P5.6**	On-site bicycle facilities are designed and constructed in accordance with *AUSTROAD's Traffic Engineering Practice, Part 14 - Bicycles*.

Table 1 - Inconsistent Uses

Inconsistent Uses
Aged Persons and Special Needs Housing
Agriculture
Airport
Animal Keeping
Apartment Building
Bed and Breakfast
Brothel
Bulky Goods Showroom
Cemetery
Child Care Centre
Commercial Office
Community Facility
Display Dwelling
Display and Sale Activity - in sub-area IS1
Drive Through Restaurant
Dual Occupancy
Dwelling House
Education Facility
Estate Sales Office
Extractive Industry
Forestry
Funeral Parlour
General Industry- in sub-area IS1; or where involving chemical, coal and petroleum products and activities, and battery recycling and tyre recycling
Health Care Centre
Heavy Industry
High Impact Industry
Home Business
Hospital
Hotel
Indoor Recreation Facility
Institution
Intensive Agriculture
Landscape Supply Depot - in sub-area IS1
Marine Services
Mobile Home Park
Multiple Dwelling
Night Club
Outdoor Dining
Outdoor Recreation Facility
Passenger Terminal
Place of Worship
Produce Store
Refreshment Establishment
Relatives Apartment
Retail Warehouse
Roadside Stall
Rural Enterprise
Service Station - in sub-area IS1
Shop
Small Lot House
Tourist Accommodation
Tourist Park
Veterinary Surgery

Table 2 - Noise levels at the boundary of the Island Industry Zone

Period	Noise level at the boundary of the Island Industry Zone[1]
7am - 10pm	Background noise level plus 10dB(A)
10pm - 7am	Background noise level plus 8 dB(A)

Note[1] - Measured as the adjusted maximum sound pressure level $L_{Amax,adj,T}$ - as defined in the *Noise Measurement Manual* (Environmental Protection Agency, 2000).

Table 3 - Noise levels at the boundary of the nearest residential zone

Period	Noise level at the boundary of the nearest residential zone[1]
7am - 10pm	Background noise level plus 5 dB(A)
10pm - 7am	Background noise level plus 3 dB(A)

Note[1] - Measured as the adjusted maximum sound pressure level $L_{Amax,adj,T}$ - as defined in the *Noise Measurement Manual* (Environmental Protection Agency, 2000).

Table 4 - Recommended Flood Levels for Community Infrastructure

Type of Community Infrastructure	Recommended Flood Level AEP (ARI)
Emergency services, other than police facilities	0.2% (1 in 500 year ARI)
Emergency shelters	0.5% (1 in 200 year ARI)
Police facilities	0.5% (1 in 200 year ARI)
Hospitals and associated facilities	0.2% (1 in 500 year ARI)
Stores of valuable records or items of historic or cultural significance, such as galleries and libraries	0.5% (1 in 200 year ARI)
Power stations	0.2% (1 in 500 year ARI)
Major switch yards	0.2% (1 in 500 year ARI)
Substations	0.5% (1 in 200 year ARI)
Sewerage treatment plants	1% (1 in 100 year ARI)
Water treatment plants	0.5% (1 in 200 year ARI)
■ State-controlled roads ■ Works of an electricity entity not otherwise listed in this table ■ Railway lines, stations and associated facilities ■ Aviation facilities ■ Communication network facilities	No specific recommended flood level but development proponents should ensure that the infrastructure is optimally located and designed to achieve suitable levels of service, having regard to the processes and policies of the administering government agency.

Reference - *State Planning Policy Guideline 1/03; Mitigating the Adverse Impacts of Flood, Bushfire and Landslide.*

this page purposely
left blank

Division 10 - Local Centre Zone

4.10.1 Introduction

(1) This division contains the provisions for the Local Centre Zone. They are -

(a) The Local Centre Zone Tables of Assessment, that incorporates -
- (i) Levels of assessment for development in the Local Centre Zone (section 4.10.2);
- (ii) Assessment criteria for development in the Local Centre Zone (section 4.10.3);
- (iii) Local Centre Zone - Table of Assessment for Material Change of Use of Premises (section 4.10.4);
- (iv) Local Centre Zone - Table of Assessment for Other Development not associated with a Material Change of Use of Premises (section 4.10.5).

(b) The Local Centre Zone Code, that incorporates -
- (i) Compliance with the Local Centre Zone Code (section 4.10.6);
- (ii) Overall Outcomes for the Local Centre Zone Code (section 4.10.7);
- (iii) Specific Outcomes and Probable Solutions applicable to Assessable Development (section 4.10.8).

4.10.2 Levels of assessment for development in the Local Centre Zone

(1) Sections 4.10.4 and 4.10.5 identify the level of assessment for development in the Local Centre Zone, as follows -

(a) section 4.10.4 Local Centre Zone - Table of Assessment for Making a Material Change of Use of Premises[4.79]-
- (i) column 1 identifies uses that are exempt, self-assessable or assessable;
- (ii) column 2 identifies the level of assessment for the uses listed in column 1;
- (iii) the use is impact assessable where -
  - a. it is defined in Part 9 - Schedule 3 - Dictionary, Division 1 - Uses and is not listed in column 1; or
  - b. it is listed in column 1 and does not comply with the level of assessment qualifications listed in column 2; or
  - c. it is not defined in Part 9 - Schedule 3 - Dictionary, Division 1 - Uses.

(b) section 4.10.5 Local Centre Zone - Table of Assessment for Other Development not associated with a Material Change of Use of Premises -
- (i) column 1 identifies other development that is exempt, self-assessable or assessable;
- (ii) column 2 identifies the level of assessment for other development listed in column 1;
- (iii) where the other development is not listed in column 1 it is exempt.

(2) Overlays may alter the level of assessment identified in (1) (a) and (b)[4.80].

[4.79] Work associated with an application for a material change of use of premises may be assessed together with a material change of use.

[4.80] Refer to Part 5 - Overlays to determine the level of assessment for the use or other development where an Overlay affects the lot and Part 1, section 1.2.5(10)(f) that explains how the highest level of assessment applies.

4.10.3 Assessment criteria for development in the Local Centre Zone

(3) Development in the Local Centre Zone is assessed against the assessment criteria listed in column 3 of sections 4.10.4 and 4.10.5, as follows -

(a) acceptable solutions of applicable codes for self-assessable development; or

(b) applicable codes for code assessable development.

(4) Self-assessable development that does not comply with all the acceptable solutions of the applicable codes is assessable development. Non compliance with only the acceptable solutions for self-assessable development in relation to setbacks and site cover under the QDC or nominated "Alternative Provisions" or Building Assessment Provisions will not elevate the level of assessment of a proposal from self assessable development to assessable development under the Redlands Planning Scheme. In these instances, the local government will undertake the functions of a referral agency with Concurrence Agency jurisdiction under IPA to assess and determine these matters.

(5) Impact assessable development will be assessed against all relevant provisions of the Redlands Planning Scheme.

Note -

- The level of assessment indicated within section 4.10.4 - Local Centre Zone - Table of Assessment for Material Change of Use of Premises may be affected by Division 2 of the Regulatory Provisions of the *SEQ Regional Plan 2005-2026.*
- The level of assessment for reconfiguration as indicated within section 4.10.5 - Local Centre Zone Table of Assessment for Other Development not associated with a Material Change of Use of Premises, where within the Regional Landscape and Rural Production Area or Investigation Area of the *SEQ Regional Plan 2005-2026* -
  - complies with Division 3 of the Regulatory Provisions;
  - has a minimum lot size of 100 hectares, unless the subdivision meets an exclusion documented in Division 3.

4.10.4 Local Centre Zone - Table of Assessment for Material Change of Use of Premises

Local Centre Zone - Table of Assessment for Material Change of Use of Premises

column 1	column 2	column 3
Use[4.81]	**Level of Assessment**[4.82]	**Assessment Criteria**
Bed and Breakfast	Code Assessable	■ Local Centre Zone Code ■ Bed and Breakfast Code ■ Centre Design Code ■ Infrastructure Works Code ■ Landscape Code
Caretakers Dwelling	Code Assessable	■ Local Centre Zone Code ■ Caretakers Dwelling Code ■ Centre Design Code
Child Care Centre	Code Assessable	■ Local Centre Zone Code ■ Child Care Centre Code ■ Access and Parking Code ■ Centre Design Code ■ Development Near Underground Infrastructure code ■ Erosion Prevention and Sediment Control Code ■ Excavation and Fill Code ■ Infrastructure Works Code ■ Landscape Code ■ Stormwater Management Code
Commercial Office	Self-Assessable If complying with the assessment criteria being the acceptable solutions listed in column 3 Code Assessable If - (6) Not self-assessable; (7) 200m^2 or less gross floor area Otherwise - Impact Assessable	■ Acceptable Solutions in section 8.2.4 of the Centre Activity Code ■ Local Centre Zone Code ■ Access and Parking Code ■ Centre Design Code ■ Development Near Underground Infrastructure Code ■ Erosion Prevention and Sediment Control Code ■ Excavation and Fill Code ■ Infrastructure Works Code ■ Landscape Code ■ Stormwater Management Code

[4.81] See Part 9 - Schedule 3 - Dictionary, Division 1 - Uses.
[4.82] See Part 9 - Schedule 3 - Dictionary, Division 2 - Administrative Terms for a definition of level of assessment.

Local Centre Zone - Table of Assessment for Material Change of Use of Premises

column 1	column 2	column 3
Use[4.81]	**Level of Assessment**[4.82]	**Assessment Criteria**
Community Facility	Code Assessable	■ Local Centre Zone Code ■ Access and Parking Code ■ Centre Design Code ■ Development Near Underground Infrastructure Code ■ Erosion Prevention and Sediment Control Code ■ Excavation and Fill Code ■ Infrastructure Works Code ■ Landscape Code ■ Stormwater Management Code
Emergency Services	Code Assessable	■ Local Centre Zone Code ■ Access and Parking Code ■ Centre Design Code ■ Development Near Underground Infrastructure Code ■ Erosion Prevention and Sediment Control Code ■ Excavation and Fill Code ■ Infrastructure Works Code ■ Landscape Code ■ Stormwater Management Code
Health Care Centre	Self-Assessable If complying with the assessment criteria being the acceptable solutions listed in column 3 Code Assessable If not self-assessable	■ Acceptable Solutions in section 8.2.4 of the Centre Activity Code ■ Local Centre Zone Code ■ Access and Parking Code ■ Centre Design Code ■ Development Near Underground Infrastructure Code ■ Erosion Prevention and Sediment Control Code ■ Excavation and Fill Code ■ Infrastructure Works Code ■ Landscape Code ■ Stormwater Management Code
Home Business	Self-Assessable If complying with the assessment criteria being the acceptable solutions listed in column 3 Code Assessable If not self-assessable	■ Acceptable Solutions in section 6.15.4 of the Home Business Code ■ Local Centre Zone Code ■ Home Business Code ■ Access and Parking Code And where being carried out in a Domestic Outbuilding - ■ Domestic Outbuilding Code

Local Centre Zone - Table of Assessment for Material Change of Use of Premises

column 1	column 2	column 3
Use[4.81]	**Level of Assessment**[4.82]	**Assessment Criteria**
		■ Development Near Underground Infrastructure Code ■ Erosion Prevention and Sediment Control Code ■ Excavation and Fill Code
Minor Utility	Exempt	
Outdoor Dining	Code Assessable	■ Local Centre Zone Code ■ Outdoor Dining Code
Park	Self-Assessable If - (1) Being undertaken by the local government; (2) On land in the ownership or control of the local government; (3) Complying with the assessment criteria being the acceptable solutions listed in column 3. Code Assessable If not self-assessable	■ Acceptable Solutions in section 6.20.4 of the Park Code ■ Local Centre Zone Code ■ Park Code ■ Access and Parking Code ■ Development Near Underground Infrastructure Code ■ Infrastructure Works Code ■ Landscaping Code ■ Stormwater Management Code
Refreshment Establishment	Self-Assessable If - (1) 100m^2 or less gross floor area; (2) Complying with the assessment criteria being the acceptable solutions listed in column 3 Code Assessable If - (1) Not self-assessable; (2) 100m^2 or less gross floor area Otherwise - Impact Assessable	■ Acceptable Solutions in section 8.2.4 of the Centre Activity Code ■ Local Centre Zone Code ■ Access and Parking Code ■ Centre Design Code ■ Development Near Underground Infrastructure Code ■ Erosion Prevention and Sediment Control Code ■ Excavation and Fill Code ■ Infrastructure Works Code ■ Landscape Code ■ Stormwater Management Code

Local Centre Zone - Table of Assessment for Material Change of Use of Premises

column 1	column 2	column 3
Use[4.81]	**Level of Assessment**[4.82]	**Assessment Criteria**
Road	Exempt	
Service Industry	Self-Assessable If complying with the assessment criteria being the acceptable solutions listed in column 3 Code Assessable If - (1) Not self-assessable; (2) 100m^2 or less gross floor area Otherwise - Impact Assessable	■ Acceptable Solutions in section 8.2.4 of the Centre Activity Code ■ Local Centre Zone Code ■ Access and Parking Code ■ Centre Design Code ■ Development Near Underground Infrastructure Code ■ Erosion Prevention and Sediment Control Code ■ Excavation and Fill Code ■ Infrastructure Works Code ■ Landscape Code ■ Stormwater Management Code
Shop	Self-Assessable If complying with the assessment criteria being the acceptable solutions listed in column 3 Code Assessable If - (1) Not self-assessable; (2) 500m^2 or less gross floor area; or (3) In sub-area LC1 - 400m^2 or less gross floor area Otherwise - Impact Assessable	■ Acceptable solutions in section 8.2.4 of the Centre Activity Code ■ Local Centre Zone Code ■ Access and Parking Code ■ Centre Design Code ■ Development Near Underground Infrastructure Code ■ Erosion Prevention and Sediment Control Code ■ Excavation and Fill Code ■ Infrastructure Works Code ■ Landscape Code ■ Stormwater Management Code
Telecommunications Facility	Self-Assessable If complying with the assessment criteria being the acceptable solutions listed in column 3	■ Acceptable Solutions in section 6.26.4 of the Telecommunications Facility Code ■ Acceptable Solutions in section 8.5.4 of the Development Near Underground Infrastructure Code ■ Acceptable Solutions in section 8.6.4 of the Erosion Prevention and Sediment Control Code ■ Acceptable Solutions A1.(1)(a) and (c) in section 7.6.4 of the Excavation and Fill Code

Local Centre Zone - Table of Assessment for Material Change of Use of Premises

column 1	column 2	column 3
Use[4.81]	**Level of Assessment**[4.82]	**Assessment Criteria**
	Code Assessable If not self-assessable	■ Local Centre Zone Code ■ Telecommunications Facility Code ■ Access and Parking Code ■ Development Near Underground Infrastructure Code ■ Erosion Prevention and Sediment Control Code ■ Excavation and Fill Code ■ Infrastructure Works Code ■ Landscape Code
Temporary Use	Self-Assessable If complying with the assessment criteria being the acceptable solutions listed in column 3 Code Assessable If not self-assessable	■ Acceptable Solutions in section 6.27.4 of the Temporary Use Code ■ Local Centre Zone Code ■ Temporary Use Code
Utility Installation	Code Assessable	■ Local Centre Zone Code ■ Access and Parking Code ■ Centre Design Code ■ Development Near Underground Infrastructure Code ■ Erosion Prevention and Sediment Control Code ■ Excavation and Fill Code ■ Landscape Code ■ Stormwater Management Code
Veterinary Surgery	Code Assessable	■ Local Centre Zone Code ■ Access and Parking Code ■ Centre Design Code ■ Development Near Underground Infrastructure Code ■ Erosion Prevention and Sediment Control Code ■ Excavation and Fill Code ■ Infrastructure Works Code ■ Landscape Code ■ Stormwater Management Code
Defined uses not listed in column 1	Impact Assessable	
Defined uses listed in column 1 that do not comply with the level of assessment qualifications in column 2	Impact Assessable	

Local Centre Zone - Table of Assessment for Material Change of Use of Premises

column 1	column 2	column 3
Use[4.81]	**Level of Assessment[4.82]**	**Assessment Criteria**
Uses not defined in Part 9 - Schedule 3 - Dictionary, Division 1 - Uses	Impact Assessable	

4.10.5 Local Centre Zone - Table of Assessment for Other Development not associated with a Material Change of Use of Premises

Local Centre Zone - Table of Assessment for Other Development

column 1	column 2	column 3
Other Development	**Level of Assessment**[4.83]	**Assessment Criteria**
Reconfiguration for -		
Creating lots by subdividing another lot by Standard Format Plan [4.84]	Code Assessable If not in sub-area LC1 Otherwise - Impact Assessable	■ Local Centre Zone Code ■ Reconfiguration Code ■ Development Near Underground Infrastructure Code ■ Excavation and Fill Code ■ Infrastructure Works Code ■ Stormwater Management Code
Creating lots by subdividing another lot by - ■ Building Format Plan; or ■ Volumetric Format Plan	Code Assessable	■ Local Centre Zone Code ■ Reconfiguration Code
■ Rearranging the boundaries of a lot by registering a plan of subdivision; or ■ Dividing land into parts by Agreement; or ■ Creating an easement giving access to a lot from a constructed road	Code Assessable	■ Reconfiguration Code
Building Work for -		
Communications Structures	Exempt If minor building work[4.85] Self-Assessable If - (1) Not exempt; (2) Complying with the assessment criteria being the acceptable solutions listed in column 3 Code Assessable If not self-assessable	■ Acceptable Solutions in section 7.2.4 of the Communications Structure Code ■ Communications Structures Code

[4.83] See Part 9 - Schedule 3 - Dictionary, Division 2 - Administrative Terms for a definition of level of assessment.
[4.84] Whether or not having a Community Management Statement.
[4.85] See Part 9 - Schedule 3 - Dictionary, Division 2 - Administrative Terms for a definition of minor building work.

Local Centre Zone - Table of Assessment for Other Development

column 1	column 2	column 3
Other Development	**Level of Assessment**[4.83]	**Assessment Criteria**
Domestic Additions	Exempt If minor building work[4.85] Self-Assessable If - (1) Not exempt; (2) Not in sub-area LC1; (3) Complying with the assessment criteria being the acceptable solutions listed in column 3 **Note -** Non-compliance with the acceptable solutions for self assessable development in relation to setbacks, site cover and built to boundary walls, or nominated "Alternative Provisions" or Building Assessment Provisions identified in the Domestic Additions Code will not elevate the level of assessment of a proposal from self assessable development to assessment development under the Redlands Planning Scheme. Refer to section 7.3.2 of the Domestic Additions Code. Code Assessable If - (1) Not self-assessable; (2) The building height is - (a) 8.5 metres or less above ground level; (b) 2 storey or less; (3) The addition does not involve built to boundary walls Otherwise - Impact Assessable	■ Acceptable Solutions in section 7.3.5 of the Domestic Additions Code ■ Acceptable Solutions in section 8.6.4 of the Erosion Prevention and Sediment Control Code ■ Acceptable Solutions A1.(1)(a)and(c) in section 7.6.4 of the Excavation and Fill Code ■ Acceptable Solutions in section 8.5.4 of the Development Near Underground Infrastructure Code ■ Local Centre Zone Code ■ Domestic Additions Code ■ Development Near Underground Infrastructure Code ■ Erosion Prevention and Sediment Control Code ■ Excavation and Fill Code ■ Infrastructure Works Code ■ Stormwater Management Code
Domestic Outbuilding	Exempt If minor building work[4.85] Self-Assessable If - (1) Not exempt; (2) Complying with the assessment criteria being	■ Acceptable Solutions in section 7.5.5 of the Domestic Outbuilding Code ■ Acceptable Solutions in section 8.6.4 of the Erosion Prevention and Sediment Control Code

Local Centre Zone - Table of Assessment for Other Development

column 1	column 2	column 3
Other Development	**Level of Assessment**[4.83]	**Assessment Criteria**
	the acceptable solutions listed in column 3 **Note -** Non-compliance with the acceptable solutions for self assessable development in relation to setbacks, site cover and built to boundary walls or nominated "Alternative Provisions" or Building Assessment Provisions identified in the Domestic Outbuilding Code will not elevate the level of assessment of a proposal from self assessable development to assessable development under the Redlands Planning Scheme. Refer to section 7.5.2 of the Domestic Outbuilding Code. Code Assessable If not self-assessable	■ Acceptable Solutions A1.(1) (a)and(c) in section 7.6.4 of the Excavation and Fill Code ■ Acceptable Solutions in section 8.5.4 of the Development Near Underground Infrastructure Code ■ Local Centre Zone Code ■ Domestic Outbuilding Code ■ Development Near Underground Infrastructure Code ■ Erosion Prevention and Sediment Control Code ■ Excavation and Fill Code
On-site raising or relocation of an existing dwelling unit	Self-Assessable If - (1) Not in sub-area LC1; (2) Complying with the assessment criteria being the acceptable solutions listed in column 3; **Note -** Non-compliance with the acceptable solutions for self assessable development in relation to setbacks, site cover and built to boundary walls, or nominated "Alternative Provisions" or Building Assessment Provisions identified in the On-site Raising or Relocation Code will not elevate the level of assessment of a proposal from self assessable development to assessable development under the Redlands Planning Scheme. Refer to section 7.7.2 of the On-	■ Acceptable Solutions in section 7.7.5 of the On-Site Raising or Relocation Code ■ Acceptable Solutions in section 8.5.4 of the Development Near Underground Infrastructure Code ■ Acceptable Solutions in section 8.6.4 of the Erosion Prevention and Sediment Control Code ■ Acceptable Solutions A1.(1) (a)and(c) in section 7.6.4 of the Excavation and Fill Code

Local Centre Zone - Table of Assessment for Other Development

column 1	column 2	column 3
Other Development	**Level of Assessment**[4.83]	**Assessment Criteria**
	site Raising and Relocation Code. Code Assessable If - (1) Not self-assessable; (2) The building height is - (a) 8.5 metres or less above ground level; (b) 2 storey or less; (3) The relocation does not result in built to boundary walls Otherwise - Impact Assessable	■ Local Centre Zone Code ■ On-Site Raising and Relocation Code ■ Development Near Underground Infrastructure Code ■ Erosion Prevention and Sediment Control Code ■ Excavation and Fill Code ■ Infrastructure Works Code ■ Stormwater Management Code
Private Swimming Pool	Self-Assessable If complying with the assessment criteria being the acceptable solutions listed in column 3 **Note -** Non-compliance with the acceptable solutions for self assessable development in relations to setbacks, and access and parking, or nominated "Alternative Provisions" or Building Assessment Provisions identified in the Private Swimming Pool Code will not elevate the level of assessment of a proposal from self assessable development to assessable development under the Redlands Planning Scheme. Refer to section 7.8.2 of the Private Swimming Pool Code. Code Assessable If not self-assessable	■ Acceptable Solutions in section 7.8.5 of the Private Swimming Pool Code ■ Local Centre Zone Code ■ Private Swimming Pool Code ■ Development Near Underground Infrastructure Code ■ Erosion Prevention and Sediment Control Code ■ Excavation and Fill Code

Local Centre Zone - Table of Assessment for Other Development

column 1	column 2	column 3
Other Development	**Level of Assessment**[4.83]	**Assessment Criteria**
Private Tennis Court	Code Assessable	■ Private Tennis Court Code ■ Erosion Prevention and Sediment Control Code ■ Excavation and Fill Code ■ Landscape Code
Operational Works for -		
Constructing a Domestic Driveway Crossover	Self-Assessable If complying with the assessment criteria being the acceptable solutions listed in column 3 Code Assessable If not self-assessable	■ Acceptable Solutions in section 7.4.4 of the Domestic Driveway Crossover Code ■ Domestic Driveway Crossover Code
Excavation and Fill	Exempt If - (1) Disturbing less than 50m^3 of soil; (2) A height/depth not exceeding 300mm measured from ground level Self-Assessable If - (1) Not exempt; (2) Complying with the assessment criteria being the acceptable solutions listed in column 3 Code Assessable If not self-assessable	■ Acceptable Solutions in section 8.6.4 of the Erosion Prevention and Sediment Control Code ■ Acceptable Solutions A1.(1)(b),(c),(d) in section 7.6.4 of the Excavation and Fill Code ■ Erosion Prevention and Sediment Control Code ■ Excavation and Fill Code
Placing an Advertising Device on Premises	Self-Assessable If complying with the assessment criteria being the acceptable solutions listed in column 3 Code Assessable If not self-assessable	■ Acceptable Solutions in section 7.1.4 of the Advertising Devices Code ■ Advertising Devices Code

Local Centre Zone - Table of Assessment for Other Development

column 1	column 2	column 3
Other Development	**Level of Assessment[4.83]**	**Assessment Criteria**
Operational Works for Reconfiguring a Lot (by Standard Format Plan)	Code Assessable	■ Reconfiguration Code ■ Development Near Underground Infrastructure ■ Erosion Prevention and Sediment Control Code ■ Excavation and Fill Code ■ Infrastructure Works Code ■ Landscape Code ■ Stormwater Management Code
Private Waterfront Structure	Code Assessable	■ Private Waterfront Structure Code ■ Development Near Underground Infrastructure Code ■ Erosion Prevention and Sediment Control Code ■ Excavation and Fill Code
All other development not listed in column 1	Exempt	

4.10.6 Compliance with Local Centre Zone Code

(1) Development that is consistent with the specific outcomes in section 4.10.8 complies with the Local Centre Zone Code.

Note -

The following planning scheme policies will assist in achieving specific outcomes within the Local Centre Code -

- Planning Scheme Policy 5 - Environmental Emissions;
- Planning Scheme Policy 9 - Infrastructure Works;
- Planning Scheme Policy 12 - Social and Economic Impact Assessment.

4.10.7 Overall Outcomes for Local Centre Zone Code

(1) The overall outcomes are the purpose of the Local Centre Zone Code.

(2) The overall outcomes sought for the Local Centre Zone Code are described by five key characteristics[4.86] -

(a) Uses and other development;
(b) Built Form and Density;
(c) Amenity;
(d) Environment;
(e) Infrastructure.

Each of these is detailed below.

(a) Uses and Other Development

(i) Provide for a range of centre uses that -
a. enhance and protect the primacy, vitality and vibrancy of the City's network of centres;
b. serve a local catchment;
c. provide local convenience shopping for day to day needs;
d. provide for local employment opportunities;
e. provide a focus for local community interaction and activity;
f. are located, near schools, parkland and community facilities to form part of a local community node;
g. are conveniently accessible to the catchment area they serve by private vehicles, public transport and pedestrian and cycle routes.

(ii) Provide for a limited range of residential and tourist accommodation uses that -
a. contribute to the economic and social vitality of the centre;
b. maximise accessibility for residents and tourists to services, facilities and employment;
c. are designed and integrated as part of a mixed use development;
d. in sub-area LC1 - are responsive to the setting by restricting residential uses to dual occupancy only.

(b) Built Form and Density

(i) The scale of uses and other development achieve a high standard of built form and urban design that -
a. reinforce the "sense of place" established by the local centre;
b. maintain a low-rise appearance consistent with adjoining residential zones;
c. limit the impact of overshadowing on public and civic places and adjoining residential zones;
d. contribute to an attractive streetscape along all road frontages;
e. ensure a high level of physical and visual interaction and pedestrian access at ground level.

[4.86] In combination, the overall outcomes in section 4.10.7(2)(a)-(e) define the character of the Local Centre Zone.

(c) Amenity

(i) Uses and other development achieve a high standard of centre amenity by -
a. ensuring car parking areas are discretely located and do not visually dominate the centre;
b. ensuring residential and tourist accommodation uses have access to natural light and ventilation, privacy and private and communal open space;
c. protecting and enhancing places of cultural significance and streetscape value;
d. providing useable public places encompassing private land and the public road reserve;
e. providing a high quality landscape and streetscape setting that complement the centre;
f. mitigating impacts associated with light, noise, air and traffic.

(d) Environment

(i) Uses and other development minimise adverse impacts on environmental and scenic values by -
a. responding to topographical features;
b. minimising the need for excavation and fill;
c. protecting the site from erosion;
d. incorporating best practice stormwater management and enhancing water quality;
e. maximising the use of planting species that are native to the area.

(e) Infrastructure

(i) Uses and other development -
a. maximise the efficient use of existing infrastructure;
b. provide for the planned extension of infrastructure in an orderly and cost effective manner.

(ii) Uses and other development serviced by infrastructure including -
a. reticulated water;
b. reticulated sewerage; or
c. in sub-area LC1 - where the site is not able to be connected to a reticulated sewerage system, wastewater is treated and disposed of on-site subject to site, soil and locational constraints;
d. stormwater drainage;
e. constructed road access;
f. energy;
g. telecommunications;
h. waste and recycling collection.

(iii) Uses and other development reinforce a legible, integrated, efficient, safe and attractive movement network that -
a. incorporate a range of transport modes and facilities including public transport, passenger vehicles and walking and cycling;
b. provide pedestrian, cycle and vehicle connectivity and ease of mobility between the centre and adjoining residential areas and public transport stops;
c. minimise conflicts between traffic using the centre and local residential traffic and between pedestrians, cyclists and vehicles;
d. maximise opportunities for the provision of pedestrian and cycle paths.

4.10.8 Specific Outcomes and Probable Solutions applicable to Assessable Development

Assessable Development			
Specific Outcomes		**Probable Solutions**	
	Uses and Other Development -		
S1.1	Uses and other development identified as inconsistent in Table 1 are not established or undertaken in the zone.	**P1.1**	No probable solution identified.
S1.2	(1) Local centres serve a local catchment providing opportunities for convenience shopping for day to day needs only.	**P1.2**	(1) The local centre provides for the convenience shopping of the local catchment by limiting the size of shops and the overall gross floor area of the centre to - (a) where the total land area zoned Local Centre is 1500m^2 or less, the gross floor area of - (i) a single 'shop' tenancy does not exceed 400m^2; (ii) all uses does not exceed 1200m^2; or (b) where the total land area zoned Local Centre is greater than 1500m^2, the gross floor area of - (i) a single 'shop' tenancy does not exceed 800m^2; (ii) all 'shops' does not exceed 2000m^2; (iii) all uses does not exceed 50 percent of the total land area zoned Local Centre; or (c) where in sub-area LC1 - the gross floor area of a single 'shop' tenancy does not exceed 600m^2.
S1.3	Residential and tourist accommodation uses are designed and integrated as part of a mixed use development ensuring the maintenance of an active street frontage at ground level.	**P1.3**	No probable solution identified.
	Built Form and Density -		
S2.1	(1) Building height adopts a low-rise built form consistent with adjoining residential zones; (2) Where a use proposes a building height greater than an existing dwelling unit in an adjoining residential zone, site layout and building design minimises any potential privacy and overshadowing impacts.	**P2.1**	(1) The height of buildings or structures does not exceed - (a) 10.5 metres above ground level; or (b) where in sub-area LC1 - 8.5 metres above ground level; (2) No probable solution identified.

Assessable Development			
Specific Outcomes		**Probable Solutions**	
S2.2	(1) Site coverage maintains a balance between built and unbuilt areas of the site and contributes to a high quality urban centre design by - (a) providing areas for service functions such as car parking; (b) providing adequate areas for landscaping and streetscape treatments; (c) in sub-area LC1 - ensuring adequate areas for on-site wastewater disposal.	**P2.2**	(1) Site coverage is a maximum of - (a) 75 percent for up to 1200m^2 total gross floor area; or (b) 50 percent for greater than 1200m^2 gross floor area.
S2.3	(1) Front setbacks are consistent with the desired streetscape for that part of the centre and provide a generous pedestrian environment; (2) Side and rear setbacks - (a) maintain privacy, breezes and solar access to adjoining residential zones; (b) provide areas for service functions such as car parking; (c) provide areas for landscaping and streetscape treatments; (3) Where land is adjacent to a residential zone across a street, high quality streetscape treatments, inclusive of landscaped buffers, are provided along the whole of the rear frontage.	**P2.3**	(1) No probable solution identified; (2) Where a rear and/or side boundary adjoins a residential zone - (a) the building setback from the boundary is a minimum of 3 metres or half the height of the building at that point, whichever is greater; (b) this boundary is landscaped with trees that are capable of growing to above the height of the eaves of the building within 5 years of planting; (c) is supported by a solid 2 metre high acoustic and visual screen fence along the entire length of the boundary; (3) No probable solution identified.
S2.4	(1) Building design and layout incorporates architectural elements that - (a) are consistent in terms of height, bulk and mass with the predominant building form in adjoining residential zones; (b) exhibit a high degree of interest through the use of colour, angles, materials and shadows; (c) provide functional and attractive facades that contribute to a high quality built form and streetscape along all road frontages; (d) minimise any adverse overshadowing, reflective impacts and loss of privacy on adjoining residential zones; (e) ensure centre buildings have their primary address to the main street frontage; (f) incorporate covered pedestrian walkways by use of awnings throughout the centre;	**P2.4**	(1) No probable solution identified.

Assessable Development			
Specific Outcomes		**Probable Solutions**	
	(g) ensure high levels of physical and visual interaction and pedestrian access at ground level.		
	Amenity -		
S3.1	(1) High quality landscape and streetscape treatments are incorporated to - (a) contribute to the overall attractiveness and function of the local centre; (b) provide appropriate screening treatments to adjoining residential zones.	**P3.1**	(1) No probable solution identified.
S3.2	Development does not impact on the cultural heritage values of a registered heritage place(s) or character precinct.	**P3.2**	No probable solution identified.
S3.3	(1) Residential and tourist accommodation uses are capable of receiving solar access; (2) Building design maintains solar access to the habitable rooms and open space areas of adjoining residential properties.	**P3.3**	(1) No probable solution identified; (2) No probable solution identified.
S3.4	(1) Residential and tourist accommodation uses maximise privacy (visual and acoustic) through - (a) locating habitable rooms so they do not directly overlook habitable rooms of adjacent residential uses either within or adjoining the development; (b) separating noise generating areas from sleeping areas.	**P3.4**	(1) No probable solution identified.
S3.5	(1) Residential and tourist accommodation uses ensure private and community open space areas are - (a) clearly defined for their intended user and use; (b) easily accessible from living or common areas; (c) useable in size and dimension.	**P3.5**	(1) No probable solution identified.
S3.6	(1) Artificial light does not result in unreasonable disturbance to any person or activity; (2) Lighting is designed to avoid spilling onto adjoining residential zones; (3) Glare and reflection of the sun are minimised through material and	**P3.6**	(1) No probable solution identified; (2) Where adjoining a residential zone the vertical illumination resulting from direct, reflected or other incidental light emanating from non-residential uses on the site does not exceed 8 lux when measured at any point 1.5 metres

Assessable Development			
Specific Outcomes		**Probable Solutions**	
	glazing choice.		outside the boundary at or above ground level; (3) No probable solution identified.
S3.7	(1) Noise generated by the use or other development is compatible with that experienced in a local centre environment; (2) Where residential uses are incorporated as part of a mixed use development or the development adjoins a residential zone, non-residential uses are located, and designed to ameliorate noise impacts.	**P3.7**	(1) No probable solution identified; (2) The use or other development does not generate noise, measured as the $L_{Amax,adj,T}$ parameter, at the boundary of the nearest residential zone, greater than - (a) 5dB(A) above the background noise level between 7am to 10pm; or (b) 3dB(A) above the background noise level between 10pm to 7am. **Note -** The $L_{Amax,adj,T}$ parameter is defined in the *Noise Measurement Manual* (Environmental Protection Agency, 2000).
S3.8	Air quality impacts are eliminated or mitigated to a level that is compatible with a centre environment.	**P3.8**	No probable solution identified. **Note -** Refer to Part 11 - Planning Scheme Policy 5 - Environmental Emissions for further information on noise and air quality impacts.
S3.9	(1) Uses and other development reinforce the maintenance of a high standard of centre amenity by - (a) locating air conditioning units and/or refrigeration units so that they are not visually obtrusive and do not cause adverse visual or noise impacts on adjoining premises; (b) locating car parking and servicing areas to minimise impacts on adjoining premises and on the streetscape.	**P3.9**	(1) No probable solution identified.
S3.10	(1) Uses and other development are designed in accordance with the principles of Crime Prevention through Environmental Design (CPTED) to assist in crime prevention, by being - (a) orientated towards the street to provide opportunities for casual surveillance of public places;	**P3.10**	(1) No probable solution identified.

Assessable Development			
Specific Outcomes		**Probable Solutions**	
	(b) designed and well lit to ensure safety and casual surveillance of car parking areas and pedestrian and cycle paths.		
	Environment -		
S4.1	(1) Uses and other development are consistent with the effective protection of environmental values from external impacts, including - (a) stormwater run-off; (b) water quality; (c) erosion and sediment run-off; (d) pollution control.	**P4.1**	(1) No probable solution identified.
S4.2	Uses and other development are designed to minimise the need for excavation and fill.	**P4.2**	No probable solution identified. **Note -** Refer to Part 7 - Division 6 - Excavation and Fill Code for assessment criteria where the site requires earthworks.
S4.3	(1) Landscaping is designed to - (a) incorporate plant species that are native to the local area within landscaped areas; (b) recognise and enhance the landscape character of the centre; (c) incorporate landscaping as a component of the stormwater management system.	**P4.3**	(1) Species used for landscaping are selected from the native species listed in Part 9 - (a) Schedule 10 - Vegetation Species List; (b) Schedule 9 - Street Trees where within the road reserve. **Note -** For additional assessment criteria refer to Part 8 - ■ Division 8 - Landscape Code; ■ Division 9 - Stormwater Management Code.
	Infrastructure -		
S5.1	Infrastructure is provided to be readily integrated with existing systems and facilitates the orderly provision of future systems.	**P5.1**	No probable solution identified.
S5.2	Infrastructure is designed, located, constructed and managed in a manner which recognises and contributes to the sense of place and attractiveness of the local centre.	**P5.2**	No probable solution identified.
S5.3	(1) All uses and other development are serviced by infrastructure including - (a) reticulated water;	**P5.3**	(1) No probable solution identified.

Assessable Development			
Specific Outcomes		**Probable Solutions**	
	(b) reticulated sewerage; or (c) in sub-area LC1 - where the site is not able to be connected to a reticulated sewerage system, wastewater - (i) is treated and disposed of on-site subject to site, soil and locational constraints; (ii) reduces the potential for - a. contaminating groundwater, surface water or wetland environments; b. risks to reticulated water supply and public health; (d) stormwater management systems that incorporate measures to reduce stormwater quantity and manage stormwater quality; (e) constructed road access; (f) energy; (g) telecommunications; (h) waste and recycling collection facilities.		
S5.4	(1) Waste and recycling is managed to minimise impacts on the environment and nearby premises by - (a) locating waste and recycling storage areas to protect amenity and to provide safe manual handling of containers; (b) screening waste and recycling container storage areas from view; (c) providing for the cleansing of containers in a manner that does not cause adverse environmental impacts; (2) Uses and other development - (a) provide safe and efficient manoeuvring for waste collection vehicles; (b) ensure all bulk waste and recycling containers are serviced off-street and not on roads with public access; (c) ensure sufficient vertical clearance for container servicing; (d) ensure unobstructed access to containers by collection vehicles; (3) Waste and recycling storage is designed and located to -	**P5.4**	(1) No probable solution identified. (2) No probable solution identified. (3) No probable solution identified. **Note -** Refer to Part 11 - Planning Scheme Policy 9 - Infrastructure Works – Chapter 16 – Waste Management for further information on waste and recycling container volume, storage, servicing, screening and cleansing. Refer to Part 8 -Division 1 - Access and Parking Code for waste collection vehicle servicing and manoeuvring assessment criteria.

Assessable Development			
Specific Outcomes		**Probable Solutions**	
	(a) provide adequate container volume to contain the waste and recyclables; (b) provide recycle containers in an equivalent or greater volume to waste containers; (c) provide a dedicated waste and recycling container storage area that is convenient and safe to use; (d) ensure containers are located on impermeable surfaces.		
S5.5	(1) Uses and other development maximise the safe, convenient and comfortable movement of public transport passengers, pedestrians and cyclists by providing - (a) links to public transport routes and stops in the most accessible and convenient locations to promote their use; (b) pedestrian and cycle paths to surrounding neighbourhoods; (c) pathways, building entrances, amenities and seating that support accessibility for people with special needs.	**P5.5**	(1) No probable solution identified.
S5.6	(1) Opportunities for cycling as a modal choice for employees and customers are provided through - (a) clearly defined on-site cycle paths and facilities; (b) secure cycle storage areas, and facilities including showers and lockers for employees; (c) provision for cycle racks for customers.	**P5.6**	(1) Cycling facilities include - (a) on-site bicycle facilities that are designed and constructed in accordance with *AUSTROAD's Traffic Engineering Practice*, Part 14 - Bicycles; (b) the following for employees - (i) 1 bicycle space per 200m^2 of gross floor area; (ii) 1 personal locker per 2 bicycle parking spaces; (iii) 1 shower cubicle with change area per 5 bicycle spaces; or (iv) 1 shower cubicle with change area if less than 5 bicycle spaces are required; (c) 1 bicycle space per 200m^2 of gross floor area for customers, up to a maximum of 10 spaces.
S5.7	(1) The design and layout of vehicular access, parking facilities and service delivery areas are - (a) located to minimise disruption to traffic flow and impact on adjoining residential areas;	**P5.7**	(1) No probable solution identified. **Note -** Refer to Part 8 - ■ Division 7 - Infrastructure Works

Assessable Development			
Specific Outcomes		**Probable Solutions**	
	(b) located to maintain an attractive streetscape and complement surrounding residential areas along all road frontages; (c) located and designed to minimise conflicts between pedestrians and cyclists with vehicles an		Code for further assessment criteria on provision, design and constriction of utility infrastructure and pedestrian and cycle paths; ■ Division 1 - Access and Parking Code for further assessment criteria related to access and internal movement.
S5.8	Community infrastructure is able to function effectively during and immediately after flood events.	**P5.8**	Community infrastructure is located at or above the recommended flood levels in Table 2 - Recommended Flood Levels for Community Infrastructure.

Table 1 - Inconsistent Uses and Other Development

Inconsistent Uses
Agriculture
Airport
Animal Keeping
Apartment Building - in sub-area LC1; or where not part of a mixed use development
Brothel
Bulky Goods Showroom
Car Wash Facility
Cemetery
Commercial Office - where having more than 400m^2 gross floor area
Dual Occupancy - where not part of a mixed use development
Dwelling House
Extractive Industry
Forestry
General Industry
Heavy Industry
High Impact Industry
Hotel
Intensive Agriculture
Landscape Supply Depot
Marine Services
Mobile Home Park
Multiple Dwelling - in sub-area LC1; or where not part of a mixed use development
Night Club
Produce Store
Refreshment establishment - where having more than 200m^2 gross floor area
Relatives Apartment
Retail Warehouse
Roadside Stall
Rural Enterprise
Service Industry - where having more than 100m^2 gross floor area
Shop - where having more than 800m^2 gross floor area; or in sub-area LC1 where having more than 600m^2 of gross floor area
Small Lot House
Tourist Accommodation - where not part of a mixed use development
Tourist Park
Vehicle Repair Premises
Warehouse
Inconsistent Other Development
Creating lots by subdividing another lot by a Standard Format Plan (whether or not having a Community Management Statement) - in sub-area LC1

Table 2 - Recommended Flood Levels for Community Infrastructure

Type of Community Infrastructure	Recommended Flood Level AEP (ARI)
Emergency services, other than police facilities	0.2% (1 in 500 year ARI)
Emergency shelters	0.5% (1 in 200 years ARI)
Police facilities	0.5% (1 in 200 years ARI)
Hospitals and associated facilities	0.2% (1 in 500 years ARI)
Stores of valuable records or items of historic or cultural significance such as galleries and libraries	0.5% (1 in 200 years ARI)
Power stations	0.2% (1 in 500 years ARI)
Major switch yards	0.2% (1 in 500 years ARI)
Substations	0.5% (1 in 200 years ARI)
Sewerage treatment plants	1% (1 in 100 years ARI)
Water treatment plants	0.5% (1 in 200 years ARI)
■ State-controlled roads ■ Works of an electricity entity not otherwise listed in this table ■ Railway lines, stations and associated facilities ■ Aviation facilities ■ Communication network facilities	No specific recommended flood level by development proponents should ensure that the infrastructure is optimally located and designed to achieve suitable levels of service, having regard to the processes and policies of the administering government agency.

Reference - *State Planning Policy Guideline 1/03: Mitigating the Adverse Impacts of Flood, Bushfire and Landslide*.

this page purposely
left blank

Division 11 - Low Density Residential Zone

4.11.1 Introduction

(1) This division contains the provisions for the Low Density Residential Zone. They are -

(a) The Low Density Residential Zone Tables of Assessment, that incorporates -
- (i) Levels of assessment for development in the Low Density Residential Zone (section 4.11.2);
- (ii) Assessment criteria for development in the Low Density Residential Zone (section 4.11.3);
- (iii) Low Density Residential Zone - Table of Assessment for Material Change of Use of Premises (section 4.11.4);
- (iv) Low Density Residential Zone - Table of Assessment for Other Development not associated with a Material Change of Use of Premises (section 4.11.5).

(b) The Low Density Residential Zone Code, that incorporates -
- (i) Compliance with the Low Density Residential Zone Code (section 4.11.6);
- (ii) Overall Outcomes for the Low Density Residential Zone Code (section 4.11.7);
- (iii) Specific Outcomes and Probable Solutions applicable to Assessable Development (section 4.11.8).

4.11.2 Levels of assessment for development in the Low Density Residential Zone

(2) Sections 4.11.4 and 4.11.5 identify the level of assessment for development in the Low Density Residential Zone, as follows -

(a) section 4.11.4 Low Density Residential Zone - Table of Assessment for Making a Material Change of Use of Premises[4.87] -
- (i) column 1 identifies uses that are exempt, self-assessable or assessable;
- (ii) column 2 identifies the level of assessment for the uses listed in column 1;
- (iii) the use is impact assessable where -
  - a. it is defined in Part 9 - Schedule 3 - Dictionary, Division 1 - Uses and is not listed in column 1; or
  - b. it is listed in column 1 and does not comply with the level of assessment qualifications listed in column 2; or
  - c. it is not defined in Part 9 - Schedule 3 - Dictionary, Division 1 - Uses.

(b) section 4.11.5 Low Density Residential Zone - Table of Assessment for Other Development not associated with a Material Change of Use of Premises -
- (i) column 1 identifies other development that is exempt, self-assessable or assessable;
- (ii) column 2 identifies the level of assessment for other development listed in column 1;
- (iii) where the other development is not listed in column 1 it is exempt.

(3) Overlays may alter the level of assessment identified in (1)(a) and (b)[4.88].

[4.87] Works associated with an application for a material change of use of premises may be assessed together with the material change of use.

[4.88] Refer to Part 5 - Overlays to determine the level of assessment for the use or other development where an Overlay affects the lot and Part 1, section 1.2.5(10)(f) that explains how the highest level of assessment applies.

4.11.3 Assessment criteria for development in the Low Density Residential Zone

(4) Development in the Low Density Residential Zone is assessed against the assessment criteria listed in column 3 of sections 4.11.4 and 4.11.5, as follows -

(a) acceptable solutions of applicable codes for self-assessable development; or

(b) applicable codes for code assessable development.

(5) Self-assessable development that does not comply with all the acceptable solutions of the applicable codes is assessable development. Non compliance with only the acceptable solutions for self-assessable development in relation to setbacks and site cover under the QDC or nominated "Alternative Provisions" or Building Assessment Provisions will not elevate the level of assessment of a proposal from self assessable development to assessable development under the Redlands Planning Scheme. In these instances, the local government will undertake the functions of a referral agency with Concurrence Agency jurisdiction under IPA to assess and determine these matters.

(6) Impact assessable development will be assessed against all relevant provisions of the Redlands Planning Scheme.

Note -

- The level of assessment indicated within section 4.11.4 - Low Density Residential Zone - Table of Assessment for Material Change of Use of Premises may be affected by Division 2 of the Regulatory Provisions of the *SEQ Regional Plan 2005-2026.*
- The level of assessment for reconfiguration as indicated within section 4.11.5 - Low Density Residential Zone -Table of Assessment for Other Development not associated with a Material Change of Use of Premises, where within the Regional Landscape and Rural Production Area or Investigation Area of the *SEQ Regional Plan 2005-2026* -
  - complies with Division 3 of the Regulatory Provisions;
  - has a minimum lot size of 100 hectares, unless the subdivision meets an exclusion documented in Division 3.

4.11.4 Low Density Residential Zone - Table of Assessment for Material Change of Use of Premises

Low Density Residential Zone - Table of Assessment for Material Change of Use of Premises

column 1	column 2	column 3
Use[4.89]	**Level of Assessment**[4.90]	**Assessment Criteria**
Bed and Breakfast	Self-Assessable If complying with the assessment criteria being the acceptable solutions listed in column 3 Code Assessable If not self-assessable	■ Acceptable Solutions in section 6.5.4 of the Bed and Breakfast Code ■ Low Density Residential Zone Code ■ Bed and Breakfast Code ■ Infrastructure Works Code ■ Landscape Code
Display Dwelling	Code Assessable	■ Low Density Residential Zone Code ■ Display Dwelling Code
Dwelling House	Self-Assessable If complying with the assessment criteria being the acceptable solutions listed in column 3 **Note -** Non-compliance with the acceptable solutions for self assessable development in relation to setbacks, site cover and built to boundary walls, or nominated "Alternative Provisions" or Building Assessment Provisions identified in the Dwelling House Code will not elevate the level of assessment of a proposal from self assessable development to assessable development under the Redlands Planning Scheme. Refer to section 6.11.2 of the Dwelling House Code. Code Assessable If - (1) Not self-assessable; (2) The building height is - (a) 8.5 metres or less above ground level;	■ Acceptable Solutions in section 6.11.5 of the Dwelling House Code ■ Acceptable Solutions of section 8.5.4 of the Development Near Underground Infrastructure Code ■ Acceptable Solutions in section 7.4.4 of the Domestic Driveway Crossover Code ■ Acceptable Solutions in section 8.6.4 of the Erosion Prevention and Sediment Control Code ■ Acceptable Solutions A1.(1)(a)and (c) in section 7.6.4 of the Excavation and Fill Code ■ Low Density Residential Zone Code ■ Dwelling House Code ■ Development Near Underground Infrastructure Code ■ Domestic Driveway Crossover Code ■ Erosion Prevention and Sediment

[4.89] See Schedule 3 - Dictionary, Division 1 - Uses.
[4.90] See Schedule 3 - Dictionary, Division 2 - Administrative Terms for a definition of level of assessment.

Low Density Residential Zone - Table of Assessment for Material Change of Use of Premises

column 1	column 2	column 3
Use[4.89]	**Level of Assessment**[4.90]	**Assessment Criteria**
	(b) 2 storey or less Otherwise - Impact Assessable	Control Code ■ Excavation and Fill Code ■ Infrastructure Works Code ■ Stormwater Management Code
Estate Sales Office	Self-Assessable If complying with the assessment criteria being the acceptable solutions listed in column 3 Code Assessable If not self-assessable	■ Acceptable Solutions in section 6.12.4 of the Estate Sales Office Code ■ Low Density Residential Zone Code ■ Estate Sales Office Code ■ Access and Parking Code ■ Development Near Underground Infrastructure Code
Home Business	Self-Assessable If complying with the assessment criteria being the acceptable solutions listed in column 3 Code Assessable If not self-assessable	■ Acceptable Solutions in section 6.15.4 of the Home Business Code ■ Low Density Residential Zone Code ■ Home Business Code ■ Access and Parking Code And where being carried out in a Domestic Outbuilding - ■ Domestic Outbuilding Code ■ Development Near Underground Infrastructure Code ■ Erosion Prevention and Sediment Control Code ■ Excavation and Fill Code
Minor Utility	Exempt	
Park	Self-Assessable If - (1) Being undertaken by the local government; (2) On land in the ownership or control of the local government; (3) Complying with the assessment criteria being the acceptable solutions	■ Acceptable Solutions in section 6.20.4 of the Park Code ■ Acceptable Solutions in section 8.5.4 of the Development Near Underground Infrastructure Code

Low Density Residential Zone - Table of Assessment for Material Change of Use of Premises

column 1	column 2	column 3
Use[4.89]	**Level of Assessment**[4.90]	**Assessment Criteria**
	listed in column 3 Code Assessable If not self-assessable	■ Low Density Residential Zone Code ■ Park Code ■ Access and Parking Code ■ Development Near Underground Infrastructure Code ■ Infrastructure Works Code ■ Landscape Code ■ Stormwater Management Code
Relatives Apartment	Self-Assessable If complying with the assessment criteria being the acceptable solutions listed in column 3 Code Assessable If not self-assessable	■ Acceptable Solutions in section 6.21.4 of Relatives Apartment Code ■ Acceptable Solutions of section 8.5.4 of the Development Near Underground Infrastructure Code ■ Acceptable Solutions in section 8.6.4 of the Erosion Prevention and Sediment Control Code ■ Acceptable Solutions A1.(1)(a)and (c) in section 7.6.4 of the Excavation and Fill Code ■ Low Density Residential Zone Code ■ Relatives Apartment Code ■ Development Near Underground Infrastructure Code ■ Erosion Prevention and Sediment Control Code ■ Excavation and Fill Code ■ Stormwater Management Code
Road	Exempt	
Telecommunications Facility	Self-Assessable[4.91] If complying with the assessment criteria being the acceptable solutions listed in column 3 Otherwise - Impact Assessable	■ Acceptable Solutions in section 6.26.4 of the Telecommunications Facility Code ■ Acceptable Solutions in section 8.5.4 of the Development Near Underground Infrastructure Code ■ Acceptable Solutions in section 8.6.4 of the Erosion Prevention and Sediment Control Code ■ Acceptable Solutions A1.(1)(a) and (c) in section 7.6.4 of the Excavation and Fill Code

[4.91] If not self-assessable, a Telecommunication Facility in the Low Density Residential Zone is impact assessable.

Low Density Residential Zone - Table of Assessment for Material Change of Use of Premises

column 1	column 2	column 3
Use[4.89]	**Level of Assessment[4.90]**	**Assessment Criteria**
Utility Installation	Code Assessable	■ Low Density Residential Zone Code ■ Access and Parking Code ■ Development Near Underground Infrastructure Code ■ Erosion Prevention and Sediment Control Code ■ Excavation and Fill Code ■ Landscape Code ■ Stormwater Management Code
Defined uses not listed in column 1	Impact Assessable	
Defined uses listed in column 1 that do not comply with the level of assessment qualifications in column 2	Impact Assessable	
Uses not defined in Part 9 - Schedule 3 - Dictionary, Division 1 - Uses	Impact Assessable	

4.11.5 Low Density Residential Zone - Table of Assessment for Other Development not associated with a Material Change of Use of Premises

Low Density Residential Zone - Table of Assessment for Other Development

column 1	column 2	column 3
Other Development	**Level of Assessment**[4.92]	**Assessment Criteria**
Reconfiguration for -		
Creating lots by subdividing another lot by Standard Format Plan[4.93]	Code Assessable	■ Low Density Residential Zone Code ■ Reconfiguration Code ■ Development Near Underground Infrastructure Code ■ Excavation and Fill Code ■ Infrastructure Works Code ■ Stormwater Management Code
Creating lots by subdividing another lot by - ■ Building Format Plan; or ■ Volumetric Format Plan	Code Assessable	■ Low Density Residential Zone Code ■ Reconfiguration Code
■ Rearranging the boundaries of a lot by registering a plan of subdivision; or ■ Dividing land into parts by Agreement; or ■ Creating an easement giving access to a lot from a constructed road	Code Assessable	■ Reconfiguration Code
Building Work for -		
Communications Structures	Exempt If minor building work[4.94] Self-Assessable If - (1) Not exempt; (2) Complying with the assessment criteria being the acceptable solutions listed in column 3 Code Assessable If not self-assessable	■ Acceptable Solutions in section 7.2.4 of the Communications Structures Code ■ Communications Structures Code

[4.92] See Schedule 3 - Dictionary, Division 2 - Administrative Terms for a definition of level of assessment.
[4.93] Whether or not having a Community Management Statement.
[4.94] See Schedule 3 - Dictionary, Division 2 - Administrative Terms for a definition of minor building work.

Low Density Residential Zone - Table of Assessment for Other Development

column 1	column 2	column 3
Other Development	**Level of Assessment**[4.92]	**Assessment Criteria**
Domestic Additions	Exempt If minor building work[4.94] Self-Assessable If - (1) Not exempt; (2) Complying with the assessment criteria being the acceptable solutions listed in column 3 **Note -** Non-compliance with the acceptable solutions for self assessable development in relation to setbacks, site cover and built to boundary walls, or nominated "Alternative Provisions" or Building Assessment Provision identified in the Domestic Additions Code will not elevate the level of assessment of a proposal from self assessable development to assessable development under the Redlands Planning Scheme. Refer to section 7.3.2 of the Domestic Additions Code. Code Assessable If - (1) Not self-assessable; (2) The building height is - (a) 8.5 metres or less above ground level; (b) 2 storey or less Otherwise - Impact Assessable	■ Acceptable Solutions in section 7.3.5 of the Domestic Additions Code ■ Acceptable Solutions in section 8.5.4 of the Development Near Underground Infrastructure Code ■ Acceptable Solutions in section 8.6.4 of the Erosion Prevention and Sediment Control Code ■ Acceptable Solutions A1.(1)(a) and (c) in section 7.6.4 of the Excavation and Fill Code ■ Low Density Residential Zone Code ■ Domestic Additions Code ■ Development Near Underground Infrastructure Code ■ Erosion Prevention and Sediment Control Code ■ Excavation and Fill Code ■ Infrastructure Works Code ■ Stormwater Management Code
Domestic Outbuilding	Exempt If minor building work[4.94] Self-Assessable If - (1) Not exempt; (2) Complying with the assessment criteria being the acceptable solutions listed in column 3	■ Acceptable Solutions in section 7.5.5 of the Domestic Outbuilding Code ■ Acceptable Solutions in section 8.5.4 of the Development Near Underground Infrastructure Code ■ Acceptable Solutions in section 8.6.4 of the Erosion Prevention and Sediment Control Code ■ Acceptable Solutions A1.(1)(a) and (c) in section 7.6.4 of the

Low Density Residential Zone - Table of Assessment for Other Development

column 1	column 2	column 3
Other Development	**Level of Assessment**[4.92]	**Assessment Criteria**
	Note - Non-compliance with the acceptable solutions for self assessable development in relation to setbacks, site cover and built to boundary walls, or nominated "Alternative Provisions" or Building Assessment Provisions identified in the Domestic Outbuilding Code will not elevate the level of assessment of a proposal from self assessable development to assessable development under the Redlands Planning Scheme. Refer to section 7.5.2 of the Domestic Outbuilding Code. Code Assessable If not self-assessable	Excavation and Fill Code ■ Low Density Residential Zone Code ■ Domestic Outbuilding Code ■ Development Near Underground Infrastructure Code ■ Erosion Prevention and Sediment Control Code ■ Excavation and Fill Code
On-site raising or relocation of an existing dwelling unit	Self-Assessable If complying with the assessment criteria being the acceptable solutions listed in column 3 **Note -** Non-compliance with the acceptable solutions for self assessable development in relation to setbacks, site cover and built to boundary walls, or nominated "Alternative Provisions" or Building Assessment Provisions identified in the On-site Raising or Relocation Code will not elevate the level of assessment of a proposal from self assessable development to assessable development under the Redlands Planning Scheme. Refer to section 7.7.2 of the On-site Raising or Relocation Code.	■ Acceptable Solutions in section 7.7.5 of the On-Site Raising or Relocation Code ■ Acceptable Solutions in section 8.5.4 of the Development Near Underground Infrastructure Code ■ Acceptable Solutions in section 8.6.4 of the Erosion Prevention and Sediment Control Code ■ Acceptable Solutions A1.(1)(a) and (c) in section 7.6.4 of the Excavation and Fill Code

Low Density Residential Zone - Table of Assessment for Other Development

column 1	column 2	column 3
Other Development	**Level of Assessment**[4.92]	**Assessment Criteria**
	Code Assessable If - (1) Not self-assessable; (2) The building height is - (a) 8.5 metres or less above ground level; (b) 2 storey or less Otherwise - Impact Assessable	■ Low Density Residential Zone Code ■ On-Site Raising and Relocation Code ■ Development Near Underground Infrastructure Code ■ Erosion Prevention and Sediment Control Code ■ Excavation and Fill Code ■ Infrastructure Works Code ■ Stormwater Management Code
Private Swimming Pool	Self-Assessable If complying with the assessment criteria being the acceptable solutions listed in column 3 **Note -** Non-compliance with the acceptable solutions for self assessable development in relation to setbacks, and access and parking, or nominated "Alternative Provisions" or Building Assessment Provisions identified in the Private Swimming Pool Code will not elevate the level of assessment of a proposal from self assessable development to assessable development under the Redlands Planning Scheme. Refer to section 7.8.2 of the Private Swimming Pool Code. Code Assessable If not self-assessable	■ Acceptable Solutions in section 7.8.5 of the Private Swimming Pool Code ■ Private Swimming Pool Code ■ Development Near Underground Infrastructure Code ■ Erosion Prevention and Sediment Control Code ■ Excavation and Fill Code
Private Tennis Court	Self-Assessable If complying with the assessment criteria being the acceptable solutions listed in column 3 Code Assessable If not self-assessable	■ Acceptable Solutions in section 7.9.4 of the Private Tennis Court Code ■ Private Tennis Court Code ■ Erosion Prevention and Sediment Control Code ■ Excavation and Fill Code ■ Landscape Code

Low Density Residential Zone - Table of Assessment for Other Development

column 1	column 2	column 3
Other Development	**Level of Assessment**[4.92]	**Assessment Criteria**
Operational Work for -		
Constructing a Domestic Driveway Crossover	Self-Assessable If complying with the assessment criteria being the acceptable solutions listed in column 3 Code Assessable If not self-assessable	■ Acceptable Solutions in section 7.4.4 of the Domestic Driveway Crossover Code ■ Domestic Driveway Crossover Code
Excavation and Fill	Exempt If - (1) Disturbing less than 50m^3 of soil; (2) A height/depth not exceeding 300mm measured from ground level Self-Assessable If - (1) Not exempt; (2) Complying with the assessment criteria being the acceptable solutions listed in column 3 Code Assessable If not self-assessable	■ Acceptable Solutions in section 8.6.4 of the Erosion Prevention and Sediment Control Code ■ Acceptable Solutions A1.(1)(b),(c),(d) in section 7.6.4 of the Excavation and Fill Code ■ Erosion Prevention and Sediment Control Code ■ Excavation and Fill Code
Placing an Advertising Device on Premises	Self-Assessable If complying with the assessment criteria being the acceptable solutions listed in column 3 Code Assessable If not self-assessable	■ Acceptable Solutions in section 7.1.4 of the Advertising Devices Code ■ Advertising Devices Code
Operational Work for Reconfiguring a Lot (by Standard Format Plan)	Code Assessable	■ Reconfiguration Code ■ Development Near Underground Infrastructure Code ■ Erosion Prevention and Sediment Control Code ■ Excavation and Fill Code ■ Infrastructure Works Code ■ Landscape Code ■ Stormwater Management Code

Low Density Residential Zone - Table of Assessment for Other Development

column 1	column 2	column 3
Other Development	**Level of Assessment**[4.92]	**Assessment Criteria**
Private Waterfront Structure	Code Assessable	■ Private Waterfront Structure Code ■ Development Near Underground Infrastructure Code ■ Erosion Prevention and Sediment Control Code ■ Excavation and Fill Code
All other development not listed in column 1	Exempt	

4.11.6 Compliance with Low Density Residential Zone Code

(1) Development that is consistent with the specific outcomes in section 4.11.7 complies with the Low Density Residential Zone Code.

Note -

The following will assist in achieving specific outcomes within the Low Density Residential Zone Code -

- Planning Scheme Policy 5 - Environmental Emissions;
- Planning Scheme Policy 9 - Infrastructure Works;
- Planning Scheme Policy 12 - Social and Economic Impact Assessment.

4.11.7 Overall Outcomes for Low Density Residential Zone Code

(1) The overall outcomes are the purpose of the Low Density Residential Zone Code.

(2) The overall outcomes sought for the Low Density Residential Zone Code are described by five key characteristics[4.95] -

(a) Uses and Other Development;
(b) Built Form and Density;
(c) Amenity;
(d) Environment;
(e) Infrastructure.

Each of these is detailed below.

(a) Uses and Other Development

(i) Provide for a range of low density residential uses that -
a. are predominantly low-rise detached houses on individual lots;
b. encourage opportunities for working from home.

(ii) Provide for a limited range of non-residential uses that -
a. fulfill a local community need and provide opportunities for social interaction and activity;
b. are accessible to the residents served;
c. are located on the major road network or entry points to land in this zone rather than local residential streets;
d. do not compromise the role and function of centres;
e. do not result in commercial ribbon development.

(b) Built Form and Density

(i) The scale of uses and other development contribute to a predominantly detached built form by -
a. limiting building height to maintain a low-rise appearance;
b. protecting the spacious nature of the zone;
c. buildings are sited and of a width, depth and bulk that are consistent with the lot size and a residential streetscape;
d. non-residential uses being consistent with the preferred building types expected in the zone.

(ii) The density of uses and other development maintains existing streetscapes and lot sizes established in this zone.

(iii) Lot layout is climatically responsive.

[4.95] In combination, the overall outcomes in section 4.11.7 (2)(a)-(e) define the character of the Low Density Residential Zone.

(iv) Buildings incorporate a mix of materials that are responsive to local conditions and styles.

(c) Amenity

(i) Uses and other development achieve a high standard of residential amenity by -
a. protecting and enhancing of places of cultural significance or streetscape value;
b. having access to natural light and ventilation, privacy and private open space commensurate with the use;
c. providing high quality useable public open space that meets the needs of the community;
d. maintaining the safety of people and property;
e. eliminating or mitigating impacts associated with light, noise, air and traffic.

(ii) The scale, operational attributes and impacts of non-residential uses maintains a high standard of residential amenity.

(d) Environment

(i) Uses and other development minimise adverse impacts on environmental and scenic values by -
a. responding to topographical features;
b. minimising the need for excavation and fill;
c. protecting the site from erosion;
d. maximising the retention of native vegetation;
e. maximising the use of planting species that are native and characteristic to the area;
f. incorporating best practice stormwater management and enhancing water quality.

(e) Infrastructure

(i) Uses and other development -
a. provide for the extension of urban infrastructure in a orderly and cost effective manner;
b. do not result in unacceptable risk to community infrastructure.

(ii) Uses and other development are serviced by urban infrastructure including -
a. reticulated water;
b. reticulated sewerage;
c. stormwater drainage;
d. constructed road access;
e. energy;
f. telecommunications;
g. waste and recycling collection.

(iii) Uses and other development reinforce an integrated, legible, efficient and safe movement network that -
a. incorporate a full range of movement modes including public transport, passenger vehicles, walking and cycling;
b. provide pedestrian, cycle and vehicle movement networks that maximise connectivity, permeability and ease of mobility.

4.11.8 Specific Outcomes and Probable Solutions applicable to Assessable Development

Assessable Development			
Specific Outcomes		**Probable Solutions**	
	Uses and Other Development -		
S1.1	Uses identified as inconsistent in Table 1 are not established in the zone.	**P1.1**	No probable solution identified.
S1.2	(1) Non-residential uses, such as local shopping, medical facilities, churches, child care centres and the like may be contemplated in appropriate locations and subject to detailed development requirements including - (a) being located on the major road network; (b) co-locating with other similar uses; (c) providing only for the identified convenience needs of the local community; (d) not impacting on the role and function of the City's network of centres; (e) resulting in positive economic and social benefits for the local community. **Note -** Refer to Part 11 - Planning Scheme Policy 12 - Social and Economic Impact Assessment.	**P1.2**	(1) Non-residential uses - (a) locate on the corner of collector or higher order roads; (b) where of - (i) retail or commercial nature - a. are co-located with other similar uses; b. are 600m^2 or less gross floor area, with no one tenancy exceeding 400m^2 gross floor area; c. are not within 800 metres of any similar uses or a centre zone; (ii) community facilities, health care centres, child care centres, or uses of a similar community nature - a. are 400m^2 or less of gross floor area per use; b. are co-located with other similar uses or retail or commercial uses.
S1.3	(1) The following uses are encouraged - (a) bed and breakfast; (b) home business; (c) relatives apartment.	**P1.3**	(1) No probable solution identified. **Note -** Refer to Part 6 - ■ Division 5 - Bed and Breakfast Code; ■ Division 15 - Home Business Code; ■ Division 21 - Relatives Apartment Code.
	Built Form and Density -		
S2.1	(1) The height of buildings and structures maintain a low-rise built form by - (a) being compatible with the existing streetscape; (b) adopting the predominant height of surrounding buildings; (2) Where a use proposes a building height greater than that of the	**P2.1**	(1) Building height 8.5 metres or less above ground level; (2) No probable solution identified. **Note -** Refer to the relevant use code for specific building height assessment criteria.

Assessable Development			
Specific Outcomes		**Probable Solutions**	
	adjoining, building, site layout and building design minimises any potential impacts of overshadowing and loss of privacy.		
S2.2	(1) Site coverage of buildings balance built and unbuilt areas to - (a) be consistent with maintaining the spacious nature of the zone; (b) provide solar access to living and open space areas; (c) assist in retaining existing native plants; (d) enhance privacy between buildings; (e) provide useable open space for the occupants; (f) provide space for service functions including car parking and clothes drying.	**P2.2**	(1) Site coverage is a maximum of 30 percent or less. **Note -** Refer to the relevant use code for site specific site coverage assessment criteria.
S2.3	(1) Setbacks - (a) complement existing front setbacks in the street; (b) maximise the usability of side and rear setbacks for outdoor open space areas, privacy and solar access for the occupants and adjoining uses.	**P2.3**	(1) No probable solution identified. **Note -** Refer to the relevant use code for specific site coverage assessment criteria.
S2.4	Density of reconfiguration provides for lot sizes that accommodate detached dwellings and are compatible with the spacious character of the zone.	**P2.4**	Minimum lot size is 2000m^2. **Note -** Refer to Part 7 - Division 11 - Reconfiguration Code for additional assessment criteria.
S2.5	(1) Building design incorporates architectural elements that - (a) exhibit a high degree of interest through the use of colour, angles and materials; (b) include verandahs, decks, eaves, window hoods or similar elements to create shade and cast shadow; (c) promote an attractive streetscape and encourage safety and surveillance through orientating entrances towards the street; (d) minimise adverse overshadowing and reflective impacts on adjoining dwelling units; (e) integrate with landscape planting and features.	**P2.5**	(1) No probable solution identified. **Note -** Refer to the relevant use code for specific built form assessment criteria.

Assessable Development			
Specific Outcomes		**Probable Solutions**	
S2.6	(2) Reconfiguration results in pleasant environments and reduces energy consumption through being climatically responsive by - (a) lots being orientated and of a length and width to - (i) maximise solar access to the north in winter; (ii) minimise solar access to the east and west in summer; (b) having regard to the topography of the land.	**P2.6**	(1) No probable solution identified. **Note -** Refer to the relevant use code or Part 7 - Division 11 - Reconfiguration Code for specific climate control assessment criteria.
	Amenity -		
S3.1	Uses and other development do not adversely impact on the cultural heritage values of a registered heritage place(s) or character precinct.	**P3.1**	No probable solution identified.
S3.2	(1) Uses are capable of - (a) receiving solar access; (b) maintaining solar access to the habitable rooms and open space areas of adjoining uses.	**P3.2**	(1) No probable solution identified. **Note -** Refer to relevant use code for specific solar access assessment criteria.
S3.3	(1) Building layout and design maximise privacy (visual and acoustic) through - (a) locating habitable rooms so they are not directly overlooking habitable rooms of adjoining uses; (b) separating noise generating areas from sleeping areas.	**P3.3**	(1) No probable solution identified. **Note -** Refer to the relevant use code for specific privacy assessment criteria.
S3.4	(1) Private open space areas are - (a) clearly defined for private use; (b) easily accessible from living or common areas; (c) useable in size and dimension; (d) of a suitable slope; (e) capable of receiving solar access.	**P3.4**	(1) No probable solution identified. **Note -** Refer to the relevant use code for specific private open space assessment criteria.
S3.5	(1) Areas set aside for public open space - (a) provide for recreational, aesthetic and environmental needs; (b) incorporate stormwater management needs, while not hindering the function of the open space.	**P3.5**	(1) No probable solution identified. **Note -** For additional assessment criteria for public open space refer - ■ Part 6 - Division 20 - Park Code; ■ Part 7 - Division 11 - Reconfiguration Code.

Assessable Development			
Specific Outcomes		**Probable Solutions**	
S3.6	(1) Uses and other development are designed in accordance with the principles of Crime Prevention through Environmental Design (CPTED) to assist in crime prevention, including being - (a) orientated towards the street or parkland to provide opportunities for casual surveillance; (b) designed and well lit to ensure casual surveillance opportunities, particularly for parkland and pedestrian and cycle paths.	**P3.6**	(1) No probable solution identified.
S3.7	(1) Artificial lighting does not result in unreasonable disturbance to any person or activity; (2) Glare and reflection from the sun are minimised through material and glazing choice.	**P3.7**	(1) The vertical illumination resulting from direct, reflected or other incidental light emanating from the site does not exceed 8 lux when measured at any point 1.5 metres outside the boundary at or above ground level; (2) No probable solution identified.
S3.8	(1) Noise generated by the use or other development is compatible with that experienced in a residential environment.	**P3.8**	(1) The use or other development does not generate noise, measured as the $L_{Amax,adj,T}$ parameter, at the boundary of the lot or premises, greater than - (a) 5dB(A) above the background noise level between 7am to 10pm; or (b) 3dB(A) above the background noise level between 10pm to 7am. **Note -** The $L_{Amax,adj,T}$ parameter is defined in the *Noise Measurement Manual* (Environmental Protection Agency, 2000).
S3.9	Air quality impacts are eliminated or mitigated to a level that is compatible with a residential environment by no emission of vibration, odour, fumes, smoke, vapour, steam, soot, ash, dust, grit, oil, radio or electrical interference beyond the premises.	**P3.9**	No probable solution identified. **Note -** Refer to Part 11 - Planning Scheme Policy 5 - Environmental Emissions for further information on noise and air quality impacts.
S3.10	(1) Traffic movements are compatible with that experienced in a residential environment	**P3.10**	(1) Non-residential uses for commercial, retail and community facilities and services, or similar are - (a) located on collector or higher order roads;

Assessable Development			
Specific Outcomes		**Probable Solutions**	
			(b) do not gain access from local roads. **Note -** Refer to Part 11 - Planning Scheme Policy 5 - Environmental Emissions for further information on air quality and noise impacts.
	Environment -		
S4.1	(1) Protect the environment from impacts associated with the use or other development including - (a) stormwater run-off; (b) water quality; (c) erosion and sediment run-off; (d) weed infestation.	**P4.1**	(1) No probable solution identified.
S4.2	Uses and other development are designed to complement, rather than detract from the landscape setting.	**P4.2**	No probable solution identified.
S4.3	(1) Minimise the need for excavation and fill by uses and other development being located and designed to - (a) prevent the unnecessary removal of native plants; (b) protect overland drainage flows; (c) protect the amenity of adjoining properties; (d) reduce erosion and sediment run-off.	**P4.3**	(1) No probable solution identified. **Note -** Refer to Part 7 - Division 6- Excavation and Fill Code for specific assessment criteria.
S4.4	(1) Uses and other development - (a) retain native plants over 30 percent of the lot, particularly stands of mature native trees; (b) roads and driveways are aligned and designed to maximise the retention of mature native plants; (c) associated development, such as swimming pools, tennis courts, domestic outbuildings and the like are located to minimise removal of native plants.	**P4.4**	(1) No probable solution is identified.
S4.5	(1) Landscaping - (a) incorporates plant species that are native to the local area; (b) recognises and enhances the landscape setting of the local area; (c) supports the retention and	**P4.5**	(1) Species used for landscaping are selected from the native plant species listed in Part 9 - (a) Schedule 10 - Vegetation Species List; (b) Schedule 9 - Street Trees where within the road reserve.

Assessable Development			
Specific Outcomes		**Probable Solutions**	
	rehabilitation of enhancement areas and corridors; (d) maximises use of permeable surfaces and landscaping to reduce stormwater run-off; (e) incorporate landscaping as a component of the stormwater management system; (f) filters views of the built environment from higher order roads; (g) establishes a treed streetscape.		**Note -** For additional assessment criteria refer to Part 8 - ■ Division 8 - Landscape Code; ■ Division 9 - Stormwater Management Code.
	Infrastructure -		
S5.1	(1) All uses and other development are serviced by infrastructure including - (a) reticulated water; (b) reticulated sewerage; (c) stormwater drainage; (d) constructed road access; (e) energy; (f) telecommunications; (g) waste and recycling collection facilities.	**P5.1**	(1) No probable solution identified.
S5.2	Road, driveway and utility infrastructure alignment and design do not adversely impact the environmental values of the area and maximise the retention of mature native trees.	**P5.2**	No probable solution identified.
S5.3	Uses and other development maximise opportunities to provide and to upgrade pedestrian and cycle paths.	**P5.3**	No probable solution identified. **Notes -** Refer to - ■ Part 8 - Division 7 - Infrastructure Works Code for further information on provision, design and construction of utility infrastructure, roads and pedestrian and cycle paths; ■ Part 8 - Division 9 - Stormwater Management Code for requirements on roof and surface drainage; ■ Where creating new lots refer to Part 7 - Division 11 - Reconfiguration Code.
S5.4	(1) Waste and recycling is managed to minimise impacts on the environment by - (a) locating waste and recycling storage areas to protect amenity and to provide safe	**P5.4**	(1) No probable solution identified. **Note -** Refer to Part 11 - Planning Scheme Policy 9 - Infrastructure Works –

Assessable Development			
Specific Outcomes		**Probable Solutions**	
	manual handling of containers; (b) screening waste and recycling container storage areas from view; (c) providing for the cleansing of containers in a manner that does not cause adverse environmental impacts.		Chapter 16 – Waste Management for further information on waste and recycling container volume, storage, servicing, screening and cleansing.
S5.5	Community infrastructure is able to function effectively during and immediately after flood events.	**P5.5**	Community infrastructure is located at or above the recommended flood levels in Table 2 - Recommended Flood Levels for Community Infrastructure.

Table 1 - Inconsistent Uses

Inconsistent Uses
Agriculture
Airport
Animal Keeping
Apartment Building
Brothel
Bulky Goods Showroom
Car Wash Facility
Cemetery
Commercial Office - where having more than 400m^2 gross floor area
Display and Sale Activity
Drive Through Restaurant
Dual Occupancy
Extractive Industry
Forestry
Funeral Parlour
General Industry
Heavy Industry
High Impact Industry
Hotel
Intensive Agriculture
Landscape Supply Depot
Marine Services
Mobile Home Park
Multiple Dwelling
Night Club
Outdoor Dining - where having more than 100m^2 gross floor area
Passenger Terminal
Produce Store
Refreshment Establishment - where having more than 400m^2 gross floor area
Retail Warehouse
Roadside Stall
Rural Enterprise
Service Industry
Service Station
Shop - where having more than 400m^2 gross floor area
Small Lot House
Temporary Use
Tourist Park
Vehicle Depot
Vehicle Parking Station
Vehicle Repair Premises
Warehouse

Table 2 - Recommended Flood Levels for Community Infrastructure

Type of Community Infrastructure	Recommended Flood Level AEP (ARI)
Emergency services, other than police facilities	0.2% (1 in 500 year ARI)
Emergency shelters	0.5% (1 in 200 year ARI)
Police facilities	0.5% (1 in 200 year ARI)
Hospitals and associated facilities	0.2% (1 in 500 year ARI)
Stores of valuable records or items of historic or cultural significance, such as galleries and libraries	0.5% (1 in 200 year ARI)
Power stations	0.2% (1 in 500 year ARI)
Major switch yards	0.2% (1 in 500 year ARI)
Substations	0.5% (1 in 200 year ARI)
Sewerage treatment plants	1% (1 in 100 year ARI)
Water treatment plants	0.5% (1 in 200 year ARI)
■ State-controlled roads ■ Works of an electricity entity not otherwise listed in this table ■ Railway lines, stations and associated facilities ■ Aviation facilities ■ Communication network facilities	No specific recommended flood level but development proponents should ensure that the infrastructure is optimally located and designed to achieve suitable levels of service, having regard to the processes and policies of the administering government agency.

Reference - *State Planning Policy Guideline 1/03: Mitigating the Adverse Impacts of Flood, Bushfire and Landslide*.

Division 12 - Major Centre Zone

4.12.1 Introduction

(1) This division contains the provisions for the Major Centre Zone. They are -

(a) The Major Centre Zone Tables of Assessment, that incorporates -
- (i) levels of assessment for development in the Major Centre Zone (section 4.12.2);
- (ii) assessment criteria for development in the Major Centre Zone (section 4.12.3);
- (iii) Major Centre Zone - Table of Assessment for Material Change of Use of Premises (section 4.12.4);
- (iv) Major Centre Zone - Table of Assessment for Other Development not associated with a Material Change of Use of Premises (section 4.12.5).

(b) The Major Centre Zone Code, that incorporates -
- (i) compliance with the Major Centre Zone Code (section 4.12.6);
- (ii) overall Outcomes for the Major Centre Zone Code (section 4.12.7);
- (iii) Specific Outcomes and Probable solutions applicable to Assessable Development (section 4.12.8).

4.12.2 Levels of Assessment for Development in the Major Centre Zone

(2) Sections 4.12.4 and 4.12.5 identify the level of assessment for development in the Major Centre Zone, as follows -

(a) section 4.12.4 Major Centre Zone - Table of Assessment for Making a Material Change of Use of Premises[4.96] -
- (i) column 1 identifies uses that are exempt, self-assessable or assessable;
- (ii) column 2 identifies the level of assessment for the uses listed in column 1;
- (iii) the use is impact assessable where -
  - a. it is defined in Part 9 Schedule 3 - Dictionary, Division 1 - Uses and is not listed in column 1; or
  - b. it is listed in column 1 and does not comply with the level of assessment qualifications listed in column 2; or
  - c. it is not defined in Part 9 - Schedule 3 - Dictionary, Division 1 - Uses.

(b) section 4.12.5 Major Centre Zone - Table of Assessment for Other Development not associated with a Material Change of Use of Premises -
- (i) column 1 identifies other development that is exempt self-assessable or assessable;
- (ii) column 2 identifies the level of assessment for other development listed in column 1;
- (iii) where the other development is not listed in column 1 it is exempt.

(3) Overlays may alter the level of assessment identified in (1) (a) and (b)[4.97].

[4.96] Works associated with an application for a material change of use of premises may be assessed together with the material change of use.

[4.97] Refer to Part 5 - Overlays to determine the level of assessment for the use or other development where an Overlay affects the lot and Part 1, section 1.2.5(10)(f) that explains how the highest level of assessment applies.

4.12.3 Assessment Criteria for Development in the Major Centre Zone

(4) Development in the Major Centre Zone is assessed against the assessment criteria listed in column 3 of sections 4.12.4 and 4.12.5, as follows -

(a) acceptable solutions of applicable codes for self-assessable development; or

(b) applicable codes for code assessable development.

(5) Self-assessable development which does not comply with all the acceptable solutions of the applicable codes is assessable development.

(6) Impact assessable development will be assessed against all relevant provisions of the Redlands Planning Scheme.

Note -

- The level of assessment indicated within section 4.12.4 - Major Centre Zone - Table of Assessment for Material Change of Use of Premises may be affected by Division 2 of the Regulatory Provisions of the *SEQ Regional Plan 2005-2026.*
- The level of assessment for reconfiguration as indicated within section 4.12.5 - Major Centre Zone - Table of Assessment for Other Development not associated with a Material Change of Use of Premises, where within the Regional Landscape and Rural Production Area or Investigation Area of the *SEQ Regional Plan 2005-2026* -
  - complies with Division 3 of the Regulatory Provisions;
  - has a minimum lot size of 100 hectares, unless the subdivision meets an exclusion documented in Division 3.

Note -

Summary of Major Centre Zone Sub-areas	
Sub-area	**Description**
Sub-area MC1	Capalaba - central core
Sub-area MC2	Capalaba - to the north of Old Cleveland Road
Sub-area MC3	Cleveland - Bloomfield Street and surrounds
Sub-area MC4	Cleveland - Harbour Precinct
Sub-area MC5	Cleveland - Cleveland Railway Station Precinct
Sub-area MC6	Cleveland - Performing Arts Precinct
Sub-area MC7	Cleveland - Waterloo Street, Russell Street, Bloomfield Street and Ross Court
Sub-area MC8	Cleveland - Waterloo Street, Ross Court, Bloomfield Street and Princess Street
Sub-area MC9	Victoria Point - North of Bunker Road
Sub-area MC10	Victoria Point - South East Corner of Colburn Avenue and Cleveland/Redland Bay Road
Sub-area MC11	Victoria Point - East of Colburn Avenue and Cleveland/Redland Bay Road to the rear of land on the south east corner of Colburn Avenue and Cleveland/Redland Bay Road.
Sub-area MC12	Victoria Point - South of Bunker Road on Cleveland/Redland Bay Road

4.12.4 Major Centre Zone - Table of Assessment for Material Change of Use of Premises

Major Centre Zone - Table of Assessment for Material Change of Use of Premises

Column 1	column 2	Column 3
Use[4.98]	**Level of Assessment**[4.99]	**Assessment Criteria**
Aged Persons and Special Needs Housing	Code Assessable If - (1) Not in sub-area - (a) MC7; or (b) MC9;or (c) MC10; or (d) MC11; or (e) MC12; (2) The use is undertaken as part of a mixed use development; (3) Building height does not exceed the height limits shown on - (a) Map 1 - Capalaba Height Limit Map; or (b) Map 2 - Cleveland Height Limit Map Otherwise - Impact Assessable	■ Major Centre Zone Code ■ Aged Persons and Special Needs Housing Code ■ Access and Parking Code ■ Centre Design Code ■ Development Near Underground Infrastructure Code ■ Erosion Prevention and Sediment Control Code ■ Excavation and Fill Code ■ Infrastructure Works Code ■ Landscape Code ■ Stormwater Management Code
Apartment Building	Code Assessable If - (1) Not in sub-area - (a) MC7; or (b) MC9; or (c) MC10; or (d) MC11; or (e) MC12; (2) The use is undertaken as part of a mixed use development; (3) Building height does not exceed the height limits shown on - (a) Map 1 - Capalaba Height Limit Map; or (b) Map 2 - Cleveland Height Limit Map Otherwise - Impact Assessable	■ Major Centre Zone Code ■ Apartment Building Code ■ Access and Parking Code ■ Centre Design Code ■ Development Near Underground Infrastructure Code ■ Erosion Prevention and Sediment Control Code ■ Excavation and Fill Code ■ Infrastructure Works Code ■ Landscape Code ■ Stormwater Management Code
Bulky Goods Showroom	Code Assessable If - (1) Not in sub-area - (a) MC4; or	■ Major Centre Zone Code ■ Access and Parking Code ■ Centre Design Code ■ Development Near Underground Infrastructure Code

[4.98] See Part 9 - Schedule 3 - Dictionary, Division 1 - Uses.
[4.99] See Part 9 - Schedule 3 - Dictionary, Division 2 - Administrative Terms for a definition of level of assessment.

Major Centre Zone - Table of Assessment for Material Change of Use of Premises

Column 1	column 2	Column 3
Use[4.98]	**Level of Assessment**[4.99]	**Assessment Criteria**
	(b) MC5; or (c) MC6; or (d) MC8 Otherwise - Impact Assessable	■ Erosion Prevention and Sediment Control Code ■ Excavation and Fill Code ■ Infrastructure Works Code ■ Landscape Code ■ Stormwater Management Code
Car Wash Facility	Code Assessable If - (1) Not in sub-area - (a) MC1; or (b) MC2; or (c) MC3; or (d) MC4; or (e) MC5; or (f) MC6; or (g) MC8; or (h) MC9; or (i) MC12 Otherwise - Impact Assessable	■ Major Centre Zone Code ■ Access and Parking Code ■ Centre Design Code ■ Development Near Underground Infrastructure Code ■ Erosion Prevention and Sediment Control Code ■ Excavation and Fill Code ■ Infrastructure Works Code ■ Landscape Code ■ Stormwater Management Code
Caretakers Dwelling	Code Assessable	■ Major Centre Zone Code ■ Caretakers Dwelling Code ■ Centre Design Code
Child Care Centre	Code Assessable If - (1) Not in sub-area MC7; (2) The use is undertaken as part of a mixed use development Otherwise - Impact Assessable	■ Major Centre Zone Code ■ Child Care Centre Code ■ Access and Parking Code ■ Centre Design Code ■ Development Near Underground Infrastructure Code ■ Erosion Prevention and Sediment Control Code ■ Excavation and Fill Code ■ Infrastructure Works Code ■ Landscape Code ■ Stormwater Management Code
Commercial Office	Self-Assessable If - (1) Not in sub-area - (a) MC7; or (b) MC8; (2) Complying with the assessment criteria being the acceptable solutions listed in column 3 Code Assessable If -	■ Acceptable Solutions in section 8.2.4 of the Centre Activity Code ■ Major Centre Zone Code ■ Access and Parking Code ■ Centre Design Code

Major Centre Zone - Table of Assessment for Material Change of Use of Premises

Column 1	column 2	Column 3
Use[4.98]	**Level of Assessment**[4.99]	**Assessment Criteria**
	(1) Not self-assessable; (2) Not in sub-area - (a) MC7; or (b) MC8; (3) Building height does not exceed the height limits shown on - (a) Map 1 - Capalaba Height Limit Map; or (b) Map 2 - Cleveland Height Limit Map; or (c) 14 metres in sub-areas MC9, MC10, MC11, MC12 at Victoria Point Otherwise - Impact Assessable	■ Development Near Underground Infrastructure Code ■ Erosion Prevention and Sediment Control Code ■ Excavation and Fill Code ■ Infrastructure Works Code ■ Landscape Code ■ Stormwater Management Code
Community Facility	Code Assessable If not in sub-area MC7 Otherwise - Impact Assessable	■ Major Centre Zone Code ■ Access and Parking Code ■ Centre Design Code ■ Development Near Underground Infrastructure Code ■ Erosion Prevention and Sediment Control Code ■ Excavation and Fill Code ■ Infrastructure Works Code ■ Landscape Code ■ Stormwater Management Code
Display and Sale Activity	Code Assessable If - (1) Not in sub-area - (a) MC1; or (b) MC2; or (c) MC3; or (d) MC4; or (e) MC5; or (f) MC6; or (g) MC8; or (h) MC12 Otherwise - Impact Assessable	■ Major Centre Zone Code ■ Access and Parking Code ■ Centre Design Code ■ Development Near Underground Infrastructure Code ■ Erosion Prevention and Sediment Control Code ■ Excavation and Fill Code ■ Infrastructure Works Code ■ Landscape Code ■ Stormwater Management Code
Display Dwelling	Self-Assessable If complying with the assessment criteria being the acceptable solutions listed in column 3 Code Assessable If - (1) Not self-assessable; (2) Within a dwelling unit approved under this	■ Acceptable Solutions in section 6.8.4 of the Display Dwelling Code ■ Major Centre Zone Code ■ Display Dwelling Code

Major Centre Zone - Table of Assessment for Material Change of Use of Premises

Column 1	column 2	Column 3
Use[4.98]	**Level of Assessment**[4.99]	**Assessment Criteria**
	planning scheme Otherwise - Impact Assessable	
Drive Through Restaurant	Code Assessable If - (1) Not in sub-area - (a) MC1; or (b) MC4; or (c) MC5; or (d) MC6; or (e) MC8 Otherwise - Impact Assessable	■ Major Centre Zone Code ■ Drive Through Restaurant Code ■ Access and Parking Code ■ Centre Design Code ■ Development Near Underground Infrastructure Code ■ Erosion Prevention and Sediment Control Code ■ Excavation and Fill Code ■ Infrastructure Works Code ■ Landscape Code ■ Stormwater Management Code
Education Facility	Code Assessable If - (1) Not in sub-area MC7; (2) The use is undertaken as part of a mixed use development Otherwise - Impact Assessable	■ Major Centre Zone Code ■ Centre Design Code ■ Access and Parking Code ■ Development Near Underground Infrastructure Code ■ Erosion Prevention and Sediment Control Code ■ Excavation and Fill Code ■ Infrastructure Works Code ■ Landscape Code ■ Stormwater Management Code
Emergency Services	Code Assessable	■ Major Centre Zone Code ■ Access and Parking Code ■ Centre Design Code ■ Development Near Underground Infrastructure Code ■ Erosion Prevention and Sediment Control Code ■ Excavation and Fill Code ■ Infrastructure Works Code ■ Landscape Code ■ Stormwater Management Code
Estate Sales Office	Self-Assessable If complying with the assessment criteria being the acceptable solutions listed in column 3 Code Assessable If - (1) Not self-assessable; (2) Not in sub-area MC6 Otherwise -	■ Acceptable Solutions in section 6.12.4 of the Estate Sales Office Code ■ Major Centre Zone Code ■ Estate Sales Office Code

Major Centre Zone - Table of Assessment for Material Change of Use of Premises

Column 1	column 2	Column 3
Use[4.98]	Level of Assessment[4.99]	Assessment Criteria
	Impact Assessable	
Funeral Parlour	Code Assessable If - (1) Not in sub-area - (a) MC1; or (b) MC3; or (c) MC4; or (d) MC5; or (e) MC6; or (f) MC8; or (g) MC12 Otherwise - Impact Assessable	■ Major Centre Zone Code ■ Access and Parking Code ■ Centre Design Code ■ Development Near Underground Infrastructure Code ■ Erosion Prevention and Sediment Control Code ■ Excavation and Fill Code ■ Infrastructure Works Code ■ Landscape Code ■ Stormwater Management Code
Garden Centre	Code Assessable If - (1) Not in sub-area - (a) MC1; or (b) MC2; or (c) MC3; or (d) MC4; or (e) MC5; or (f) MC6; or (g) MC8; or (h) MC12 Otherwise - Impact Assessable	■ Major Centre Zone Code ■ Access and Parking Code ■ Centre Design Code ■ Development Near Underground Infrastructure Code ■ Erosion Prevention and Sediment Control Code ■ Excavation and Fill Code ■ Infrastructure Works Code ■ Landscape Code ■ Stormwater Management Code
Health Care Centre	Self-Assessable If - (1) Not in sub-area MC7; (2) Complying with the assessment criteria being the acceptable solutions listed in column 3 Code Assessable If - (1) Not self-assessable; (2) Not in sub-area MC7 Otherwise - Impact Assessable	■ Acceptable Solutions in section 8.2.4 of the Centre Activity Code ■ Major Centre Zone Code ■ Access and Parking Code ■ Centre Design Code ■ Development Near Underground Infrastructure Code ■ Erosion Prevention and Sediment Control Code ■ Excavation and Fill Code ■ Infrastructure Works Code ■ Landscape Code ■ Stormwater Management Code

Major Centre Zone - Table of Assessment for Material Change of Use of Premises

Column 1	column 2	Column 3
Use[4.98]	**Level of Assessment**[4.99]	**Assessment Criteria**
Home Business	Self-Assessable If complying with the assessment criteria being the acceptable solutions listed in column 3 Code Assessable If - (1) Not self-assessable; (2) Within a dwelling unit approved under this planning scheme Otherwise - Impact Assessable	■ Acceptable Solutions in section 6.15.4 of the Home Business Code ■ Major Centre Zone Code ■ Home Business Code ■ Access and Parking Code
Hospital	Code Assessable If - (1) Not in sub-area - (a) MC3; or (b) MC4; or (c) MC5; or (d) MC7; or (e) MC12 Otherwise - Impact Assessable	■ Major Centre Zone Code ■ Access and Parking Code ■ Centre Design Code ■ Development Near Underground Infrastructure Code ■ Erosion Prevention and Sediment Control Code ■ Excavation and Fill Code ■ Infrastructure Works Code ■ Landscape Code ■ Stormwater Management Code
Hotel	Code Assessable If - (1) Not in sub-area - (a) MC4; or (b) MC5; or (c) MC6; or (d) MC7; or (e) MC8; or (f) MC9; or (g) MC10; or (h) MC12 Otherwise - Impact Assessable	■ Major Centre Zone Code ■ Access and Parking Code ■ Centre Design code ■ Development Near Underground Infrastructure Code ■ Erosion Prevention and Sediment Control Code ■ Excavation and Fill Code ■ Infrastructure Works Code ■ Landscape Code ■ Stormwater Management Code
Indoor Recreation Facility	Code Assessable If - (1) Not in sub-area - (a) MC4; or (b) MC5; or (c) MC6; or (d) MC8	■ Major Centre Zone Code ■ Access and Parking Code ■ Centre Design Code ■ Development Near Underground Infrastructure Code ■ Erosion Prevention and Sediment Control Code ■ Excavation and Fill Code

Major Centre Zone - Table of Assessment for Material Change of Use of Premises

Column 1	column 2	Column 3
Use[4.98]	**Level of Assessment**[4.99]	**Assessment Criteria**
	Otherwise - Impact Assessable	■ Infrastructure Works Code ■ Landscape Code ■ Stormwater Management Code
Landscape Supply Depot	Code Assessable If in sub-area MC7 Otherwise - Impact Assessable	■ Major Centre Zone Code ■ Access and Parking Code ■ Centre Design Code ■ Development Near Underground Infrastructure Code ■ Erosion Prevention and Sediment Control Code ■ Excavation and Fill Code ■ Infrastructure Works Code ■ Landscape Code ■ Stormwater Management Code
Minor Utility	Exempt	
Outdoor Dining	Code Assessable	■ Major Centre Zone Code ■ Outdoor Dining Code
Park	Self-Assessable If - (1) Being undertaken by the local government; (2) On land in the ownership or control of the local government; (3) Complying with the assessment criteria being the acceptable solutions listed in column 3 Code Assessable If not self-assessable	■ Acceptable Solutions in section 6.20.4 of the Park Code ■ Acceptable Solutions of section 8.5.4 of the Development Near Underground Infrastructure Code ■ Major Centre Zone Code ■ Park Code ■ Access and Parking Code ■ Development Near Underground Infrastructure Code ■ Infrastructure Works Code ■ Landscape Code ■ Stormwater Management Code
Passenger Terminal	Code Assessable	■ Major Centre Zone Code ■ Access and Parking Code ■ Centre Design Code ■ Development Near Underground Utility Infrastructure Code ■ Erosion Prevention and Sediment Control Code ■ Excavation and Fill Code ■ Infrastructure Works Code ■ Landscaping Code ■ Stormwater Management Code

Major Centre Zone - Table of Assessment for Material Change of Use of Premises

Column 1	column 2	Column 3
Use[4.98]	**Level of Assessment**[4.99]	**Assessment Criteria**
Place of Worship	Self-Assessable If complying with the assessment criteria being the acceptable solutions listed in column 3 Code Assessable If not self-assessable	■ Acceptable Solutions in section 8.2.4 of the Centre Activity Code ■ Major Centre Zone Code ■ Access and Parking Code ■ Centre Design Code ■ Development Near Underground Infrastructure Code ■ Erosion Prevention and Sediment Control Code ■ Excavation and Fill Code ■ Infrastructure Works Code ■ Landscape Code ■ Stormwater Management Code
Produce Store	Code Assessable If in sub-area MC7 Otherwise - Impact Assessable	■ Major Centre Zone Code ■ Access and Parking Code ■ Centre Design Code ■ Development Near Underground Infrastructure Code ■ Erosion Prevention and Sediment Control Code ■ Excavation and Fill Code ■ Infrastructure Works Code ■ Landscape Code ■ Stormwater Management Code
Refreshment Establishment	Self-Assessable If complying with the assessment criteria being the acceptable solutions listed in column 3 Code Assessable If - (1) Not self-assessable; (2) Not in sub-area - (a) MC7; or (b) MC8 Otherwise - Impact Assessable	■ Acceptable Solutions in section 8.2.4 of the Centre Activity Code ■ Major Centre Zone Code ■ Access and Parking Code ■ Centre Design Code ■ Development Near Underground Infrastructure Code ■ Erosion Prevention and Sediment Control Code ■ Excavation and Fill Code ■ Infrastructure Works Code ■ Landscape Code ■ Stormwater Management Code
Retail Warehouse	Code Assessable If - (1) Not in sub-area - (a) MC4; or (b) MC5; or (c) MC6; or (d) MC8	■ Major Centre Zone Code ■ Access and Parking Code ■ Centre Design Code ■ Development Near Underground Infrastructure Code ■ Erosion Prevention and Sediment Control Code ■ Excavation and Fill Code

Major Centre Zone - Table of Assessment for Material Change of Use of Premises

Column 1	column 2	Column 3
Use[4.98]	**Level of Assessment**[4.99]	**Assessment Criteria**
	Otherwise - Impact Assessable	■ Infrastructure Works Code ■ Landscape Code ■ Stormwater Management Code
Road	Exempt	
Service Industry	Self-Assessable If - (1) Not in sub-area - (a) MC6; or (b) MC8; or (2) 100m^2 or less gross floor area in sub-area - (a) MC1; or (b) MC2; or (c) MC3; or (d) MC4; or (e) MC5; or (f) MC9; or (g) MC12; or (3) 500m^2 or less gross floor area in sub-area - (a) MC7; or (b) MC10; or (c) MC11; (4) Complying with the assessment criteria being the acceptable solutions listed in column 3	Acceptable Solution in section 8.2.4 of the Centre Activity Code
	Code Assessable If - (1) Not in sub-area - (a) MC6; or (b) MC8; or (2) 100m^2 or less gross floor area in sub-area - (a) MC1; or (b) MC2; or (c) MC3; or (d) MC4; or (e) MC5; or (f) MC9; or (g) MC12; or (3) 500m^2 or less gross floor area in sub-area - (a) MC7; or (b) MC10; or (c) MC11 Otherwise - Impact Assessable	■ Major Centre Zone Code ■ Access and Parking Code ■ Centre Design Code ■ Development Near Underground Infrastructure Code ■ Erosion Prevention and Sediment Control Code ■ Excavation and Fill Code ■ Infrastructure Works Code ■ Landscape Code ■ Stormwater Management Code

Major Centre Zone - Table of Assessment for Material Change of Use of Premises

Column 1	column 2	Column 3
Use[4.98]	**Level of Assessment**[4.99]	**Assessment Criteria**
Service Station	Code Assessable If - (1) In sub-area - (a) MC7; or (b) MC9; or (c) MC10; or (d) MC11;or (e) MC12 Otherwise - Impact Assessable	■ Major Centre Zone Code ■ Service Station Code ■ Access and Parking Code ■ Centre Design Code ■ Development Near Underground Infrastructure Code ■ Erosion Prevention and Sediment Control Code ■ Excavation and Fill Code ■ Infrastructure Works Code ■ Landscape Code ■ Stormwater Management Code
Shop	Self-Assessable If - (1) In sub-area - (a) MC1; or (b) MC3; or (c) MC4; or (d) MC5; or (e) MC6; or (f) MC9; or (g) MC12;or (2) If 1000m^2 or less gross floor area in sub-area - (a) MC2; or (b) MC10; or (3) If 200m^2 or less gross floor area in sub-area MC7; or (4) If 2000m^2 or less gross floor area in sub-area MC11; (5) Complying with the assessment criteria being the acceptable solutions listed in column 3 Code Assessable If - (1) Not self-assessable; (2) In sub-area - (a) MC1; or (b) MC3; or (c) MC4; or (d) MC5; or (e) MC6; or (f) MC9; or (g) MC12; or (3) 1000m^2 or less gross floor area in sub-area - (a) MC2; or (b) MC10; or (4) 200m^2 or less gross floor area in sub-area MC7; or (5) 2000m^2 or less gross floor area in sub-area MC11;	■ Acceptable Solutions in section 8.2.4 of the Centre Activity Code ■ Major Centre Zone Code ■ Access and Parking Code ■ Centre Design Code ■ Development Near Underground Infrastructure Code ■ Erosion Prevention and Sediment Control Code ■ Excavation and Fill Code ■ Infrastructure Works Code ■ Landscape Code ■ Stormwater Management Code

Major Centre Zone - Table of Assessment for Material Change of Use of Premises

Column 1	column 2	Column 3
Use[4.98]	**Level of Assessment**[4.99]	**Assessment Criteria**
	(6) Building height does not exceed the height limits shown on - (a) Map 1 - Capalaba Height Limit Map; (b) Map 2 - Cleveland Height Limit Map; or (c) 14 metres in sub-areas MC9, MC10, MC11 and MC12 at Victoria Point; Otherwise - Impact Assessable	
Telecommunications Facility	Self-Assessable If complying with the assessment criteria being the acceptable solutions listed in column 3 Code Assessable If not self-assessable	■ Acceptable Solutions in section 6.26.4 of the Telecommunications Facility Code ■ Acceptable Solutions in section 8.5.4 in the Development Near Underground Infrastructure Code ■ Acceptable Solutions in section 8.6.4 of the Erosion Prevention and Sediment Control Code ■ Acceptable Solutions A1.(1)(a) and (c) in section 7.6.4 of the Excavation and Fill Code ■ Major Centre Zone Code ■ Telecommunications Facility Code ■ Access and parking Code ■ Development Near Underground Infrastructure Code ■ Erosion Prevention and Sediment Control Code ■ Excavation and Fill Code ■ Landscape Code
Temporary Use	Self-Assessable If complying with the assessment criteria being the acceptable solutions listed in column 3 Otherwise - Impact Assessable	■ Acceptable Solutions in section 6.27.4 of the Temporary Use Code
Tourist Accommodation	Code Assessable If - (1) The use is undertaken as part of a mixed use development; (2) Building height does not exceed the height limits shown on - (a) Map 1 - Capalaba Height Limit Map; or (b) Map 2 - Cleveland	■ Major Centre Zone Code ■ Tourist Accommodation Code ■ Access and Parking Code ■ Centre Design Code ■ Development Near Underground Infrastructure Code ■ Erosion Prevention and Sediment Control Code ■ Excavation and Fill Code ■ Infrastructure Works Code ■ Landscape Code ■ Stormwater Management Code

Major Centre Zone - Table of Assessment for Material Change of Use of Premises

Column 1	column 2	Column 3
Use[4.98]	**Level of Assessment[4.99]**	**Assessment Criteria**
	Height Limit Map (c) ; or (d) 14 metres in sub-area MC9; (3) Not in sub-areas - (a) MC6; or (b) MC10; or (c) MC11; or (d) MC12 Otherwise - Impact Assessable	
Utility Installation	Code Assessable	■ Major Centre Zone Code ■ Access and Parking Code ■ Centre Design Code ■ Development near Underground Infrastructure Code ■ Erosion Prevention and Sediment Control Code ■ Excavation and Fill Code ■ Landscape Code ■ Stormwater Management Code
Vehicle Parking Station	Code Assessable If the use is undertaken as part of a mixed use development Otherwise - Impact Assessable	■ Major Centre Zone Code ■ Access and Parking Code ■ Centre Design Code ■ Development Near Underground Infrastructure Code ■ Erosion Prevention and Sediment Control Code ■ Excavation and Fill Code ■ Infrastructure Works Code ■ Landscape Code ■ Stormwater Management Code
Defined uses not listed in column 1	Impact Assessable	
Defined uses listed in column 1 that do not comply with the level of assessment qualifications in column 2	Impact Assessable	
Uses not defined in Part 9 - Schedule 3 - Dictionary, Division 1 - Uses	Impact Assessable	

4.12.5 Major Centre Zone - Table of Assessment for Other Development not associated with a Material Change of Use

Major Centre Zone - Table of Assessment for Other Development

column 1	column 2	column 3
Other Development	**Level of Assessment**[4.100]	**Assessment Criteria**
Reconfiguration for -		
Creating lots by subdividing another lot by Standard Format Plan[4.101]	Code Assessable	■ Major Centre Zone Code ■ Reconfiguration Code ■ Excavation and Fill Code ■ Development Near Underground Infrastructure Code ■ Infrastructure Works Code ■ Stormwater Management Code
Creating lots by subdividing another lot by - ■ Building Format Plan; or ■ Volumetric Format Plan	Code Assessable	■ Major Centre Zone Code ■ Reconfiguration Code
■ Rearranging the boundaries of a lot by registering a plan of subdivision; or ■ Dividing land into parts by Agreement; or ■ Creating an easement giving access to a lot from a constructed road	Code Assessable	■ Reconfiguration Code
Building Work for -		
Communications Structures	Exempt If minor building works[4.102] Self-Assessable If - (1) Not exempt; (2) Complying with the assessment criteria being the acceptable solutions listed in column 3 Code Assessable If not self-assessable	■ Acceptable Solutions in section 7.2.4 of the Communications Structure Code ■ Communications Structures Code

[4.100] See Part 9 - Schedule 3 - Dictionary, Division 2 - Administrative Terms for a definition of level of assessment.
[4.101] Whether or not having a Community management State
[4.102] See Part 9 - Schedule 3 - Dictionary, Division 2 - Administrative Terms for a definition of minor building work.

Major Centre Zone - Table of Assessment for Other Development

column 1	column 2	column 3
Other Development	**Level of Assessment**[4.100]	**Assessment Criteria**
Domestic Additions	Exempt If minor building work[4.102] Code Assessable If - (1) Not exempt; (2) The building height is - (a) 8.5 metres or less above ground level; (b) 2 storey or less; (3) The addition does not result in built to the boundary walls Otherwise - Impact Assessable	■ Major Centre Zone Code ■ Domestic Additions Code ■ Development Near Underground Infrastructure Code ■ Erosion Prevention and Sediment Control Code ■ Excavation and Fill Code
Domestic Outbuilding	Exempt If minor building work[4.102] Code Assessable If not exempt	■ Major Centre Zone Code ■ Domestic Outbuilding Code ■ Development Near Underground Infrastructure Code ■ Erosion Prevention and Sediment Control Code ■ Excavation and Fill Code
On-site raising or relocation of an existing dwelling unit	Code Assessable If - (1) The building height is - (a) 8.5 metres or less above ground level; (b) 2 storey or less; (2) The relocation does not result in built to the boundary walls Otherwise - Impact Assessable	■ Major Centre Zone Code ■ On-Site Raising or Relocation Code ■ Development Near Underground Infrastructure Code ■ Erosion Prevention and Sediment Control Code ■ Excavation and Fill Code ■ Infrastructure Works Code ■ Stormwater Management Code
Private Swimming Pool	Exempt If minor building work[4.102] Code Assessable If not exempt	■ Major Centre Zone Code ■ Private Swimming Pool Code ■ Development Near Underground Infrastructure Code ■ Erosion Prevention and Sediment Control Code ■ Excavation and Fill Code

Major Centre Zone - Table of Assessment for Other Development

column 1	column 2	column 3
Other Development	**Level of Assessment**[4.100]	**Assessment Criteria**
Private Tennis Court	Code Assessable	■ Major Centre Zone Code ■ Private Tennis Court Code ■ Erosion Prevention and Sediment Control Code ■ Excavation and Fill Code ■ Landscape Code
Operational Work for -		
Constructing a Domestic Driveway Crossover	Code Assessable	■ Domestic Driveway Crossover Code
Excavation and Fill	Exempt If - (1) Disturbing less than 50m^3 of soil; (2) A height/depth not exceeding 300mm measured from ground level Self-Assessable If - (1) Not exempt; (2) Complying with the assessment criteria being the acceptable solutions listed in column 3 Code Assessable If not self-assessable	■ Acceptable Solutions in section 8.6.4 of the Erosion Prevention and Sediment Control Code ■ Acceptable Solutions A1.(1)(b),(c),(d) in section 7.6.4 of the Excavation and Fill Code ■ Erosion Prevention and Sediment Control Code ■ Excavation and Fill Code
Placing an Advertising Device on Premises	Self-Assessable If complying with the assessment criteria being the acceptable solutions listed in column 3 Code Assessable If not self-assessable	■ Acceptable Solutions in section 7.1.4 of the Advertising Devices Code ■ Advertising Devices Code
Operational Work for Reconfiguring a Lot (by Standard Format Plan)	Code Assessable	■ Reconfiguration Code ■ Development Near Underground Infrastructure Code ■ Erosion Prevention and Sediment Control Code ■ Excavation and Fill Code ■ Infrastructure Works Code ■ Landscape Code ■ Stormwater Management Code

Major Centre Zone - Table of Assessment for Other Development

column 1	column 2	column 3
Other Development	**Level of Assessment[4.100]**	**Assessment Criteria**
All other development not listed in column 1	Exempt	

4.12.6 Compliance with Major Centre Zone Code

(1) Development that is consistent with the specific outcomes in section 4.12.8 complies with the Major Centre Zone Code.

Note -

The following planning scheme policies will assist in achieving specific outcomes within the Major Centre Zone Code -

- Planning Scheme Policy No. 5 - Environmental Emissions;
- Planning Scheme Policy No. 9 - Infrastructure Works;
- Planning Scheme Policy No. 12 - Social and Economic Impact Assessment.

4.12.7 Overall Outcomes for Major Centre Zone Code

(1) The overall outcomes are the purpose of the Major Centre Zone Code.

(2) Capalaba, Cleveland and Victoria Point comprise the major centres of the City.

(3) The overall outcomes sought by the Major Centre Zone are described by six characteristics[4.103] -

(a) Uses, Role and Function;
(b) Built Form and Density;
(c) Linkages;
(d) Amenity;
(e) Environment;
(f) Infrastructure.

Each of these is detailed below.

(a) Uses, Role and Function

(i) Provide for a range of centre uses that -
a. enhance the primacy, vitality and vibrancy of the City's major centres;
b. service the primary retail, commercial, administrative, entertainment, cultural and community needs of the City;
c. provide a key source of economic activity and employment;
d. provide a major focus for community interaction and civic life;
e. are highly accessible by private vehicle, public transport and pedestrian and cycle routes.

(ii) Provide for a range of residential and tourist accommodation uses that -
a. contribute to the economic and social vitality and vibrancy of the centre;
b. maximise accessibility for a residential and tourist population to the range of services, facilities and employment opportunities provided within the centre;
c. are designed and integrated as part of a mixed use development that ensure the maintenance of active street frontages at ground level.

(iii) Sub-areas MC1 and MC2 comprise the Capalaba Major Centre which provides for a range of uses that -
a. recognise Capalaba as a Principal Centre for south east Queensland and the primary retail and commercial centre in the City;
b. serve a catchment greater than 50 000 people;
c. include discount department stores, supermarkets, a full range of specialty stores and commercial activities;
d. incorporate administrative functions that are secondary to those of Cleveland and are limited to local government support branches and State and Commonwealth government services;
e. encourage residential mixed use development;

[4.103] In combination, the overall outcomes in section 4.12.7(3)(a) - (f) define the character of the Major Centre Zone.

f. recognise Capalaba as a tourist gateway to the City as well as a centre for special events facilitated by traders and the local community;
g. provide entertainment facilities such as cinemas, nightclubs, restaurants and bowling alleys;
h. incorporate a major transport interchange providing public transport to many areas within and outside the City;
i. incorporate good road access to the City's arterial road network ensuring a driving time of approximately 20 minutes or less to much of the City;
j. within sub-area MC1 - encourages key businesses and facilities to concentrate in the area and pursue opportunities for mixed use development;
k. within sub-area MC2 do not have the intensity and activity of the sub-area MC1 the centre core but provide a key supporting business and commercial area and because of proximity to the open space to the north fronting Tingalpa Creek encourages, mixed use residential development.

(iv) Sub-areas MC3, MC4, MC5, MC6, MC7 and MC8 comprise the Cleveland Major Centre which provides for a range of uses that -
a. recognise Cleveland as a Principal Centre for south east Queensland and one of two secondary retail and commercial centres in the City;
b. serve a catchment less than 50 000 people;
c. include one (1) discount department store, supermarkets, specialty stores and commercial activities;
d. reflect the primary administrative functions of the City including the local government administrative headquarters and State and Commonwealth government services;
e. encourage residential and tourist mixed use development;
f. recognise Cleveland as the major tourist centre for events and displays including markets, fairs, carnivals and tourist information for the City;
g. recognise Cleveland as a centre for performing arts, galleries, and restaurants;
h. incorporate Cleveland as a major transport interchange providing public and private transport to most areas within the City and acknowledge the role of Cleveland as a Transit Oriented Development centre in south east Queensland;
i. within sub-area MC3 - being the centre core and the heart of the Cleveland Centre encourages key businesses and facilities to concentrate in this area and pursue opportunities for mixed use development;
j. within sub-area MC4 - encourages mixed use development that incorporates apartment buildings, commercial activities, and limited retail uses including tourist shopping and restaurants;
k. within sub-area MC5 - encourages mixed use development that is compatible with rail uses and incorporates a passenger terminal, interchange, apartment buildings, commercial activities, retail uses of a limited floor area and tourism opportunities;
l. within sub-area MC6 - provides for uses that cater primarily for significant civic developments such as cultural centres, courthouses, libraries, and Government and municipal services such as police stations and community halls;
m. within sub-area MC7 - encourages a range of uses that supports the Cleveland Centre and which ordinarily cannot be located within a centre by the nature of the types of uses or their site coverage requirements;
n. within sub-area MC8 - encourages potential redevelopment for apartment buildings and a range of other non-retail uses that are appropriate on the land and support the centre but do not result in the fragmentation or decentralisation of the centres business core.

(v) Sub-areas MC9, MC10, MC11 and MC12 comprise the Victoria Point Major Centre which provides for a range of uses that -
a. recognise Victoria Point as one of two secondary retail and commercial centres in the City;
b. serve a catchment of less than 50 000 people;
c. include one (1) discount department store, supermarkets, specialty stores and commercial activities;
d. recognise Victoria Point as a third tier administrative centre serviced by local government shop front services and branch library services;
e. recognise Victoria Point as third tier tourist centre providing tourist information for the City, particularly relating to the southern parts of the City through facilities defined in (d);

f. provide entertainment facilities such as cinemas, nightclubs, restaurants and other like activities;
g. incorporates a public transport interchange;
h. has high accessibility by private transport with driving time of less than 15 minutes to the majority of its catchment and provides higher order services to the Southern Moreton Bay Islands;
i. within sub-area MC9 - encourages retail, commercial, educational, entertainment, community and recreation uses in areas requiring high visual exposure with commercial, bulky goods showrooms and retail warehouses located within areas close to Eprapah Creek. Entertainment activities such as cinemas and restaurants are also encouraged with residential development being accommodated within the northern portion of the sub-area or part of mixed use development;
j. within sub-area MC10 - encourages convenience retailing, retail showrooms, service industry, up to 500m^2 gross floor area, service shops, medical facilities and employment based activities that are highly accessible from Colburn Avenue and Cleveland-Redland Bay Road;
k. within sub-area MC11 - encourages service, convenience, education, hospitality and other businesses that offer high accessibility to residents and which require exposure to passing traffic. Uses regarded as being consistent with the sub-area include commercial offices, retail showrooms, refreshment establishments, shops, health care centre, hotel and service station. Other uses which may be consistent depending on design and siting issues include indoor recreation centres, service industry, education facilities and display and sales activities;
l. within sub-area MC12 - encourages higher order convenience retail and shopping including shops such as shopping centres, discount department store and supermarkets, and commercial premises. Similarly higher order boutique and specialist retail shops and refreshment establishments offering outdoor dining are also encouraged.

(b) Built Form and Density

(i) The scale of uses and other development achieve a high standard of built form that -
a. reinforce a “sense of place” established by the centre;
b. maintain a mid-rise integrated development appearance;
c. do not overwhelm or dominate the centre or adjacent land;
d. limit adverse impacts of overshadowing on public and civic places;
e. contribute to an attractive high quality and distinctive streetscape when viewed from all road frontages and public or civic places;
f. within sub-area MC1 - concentrates building mass around the central core, establishing a critical mass through increased building height and identifying the heart of the Centre through physical building form;
g. within sub-areas MC3, MC4, MC5, MC6, MC7 and MC8 built form -
- maintains the ability to view part of the vegetated backdrop of North Stradbroke Island above the building line when viewed from Shore Street between Delancey and Grant Streets;
- respects and enhances the nature of the centre as a traditional Australian town with a grid street pattern, wide streets and with businesses fronting these streets;
- reinforces the concept of connecting the Raby Bay Harbour and parkland to the centre.

(ii) The density of uses and other development -
a. maximises the coherent and efficient use of land;
b. provides areas for public and civic places, landscaping and streetscape works;
c. with sub-areas MC3, MC4, MC5, MC6 and MC8 - Cleveland - increased densities retain and enhance the nature of the centre as a traditional Australian town with a grid street pattern, wide streets and businesses fronting these streets.

(c) Linkages

(i) Pedestrian permeability and connectivity is maximised throughout the centre;

(ii) Streetscaping works are undertaken within the major centre to enable a comfortable, generous, safe and attractive pedestrian environment.

(d) Amenity

(i) Uses and other development achieve a high standard of amenity by -
a. ensuring business, commercial and retail activities provide high levels of physical and visual interaction and access at ground level;
b. ensuring car parking areas and servicing areas are sensitively located and do not visually dominate the centre;
c. ensuring residential uses and tourist accommodation, where incorporated as part of a mixed use development, have access to natural light and ventilation, privacy and private and communal open space;
d. protecting and enhancing of places of cultural significance or streetscape value;
e. providing high quality useable public and civic places within and external to the built form;
f. providing a high quality landscape and streetscape setting that complements the built form and recognises the centre function;
g. mitigating impacts associated with light, noise, air and traffic.

(e) Environment

(i) Uses and other development avoid adverse impacts on environmental values by -
a. protecting the site from erosion;
b. incorporating best practice stormwater management and enhancing water quality;
c. maximising the use of planting species that are native or characteristic to the area.

(f) Infrastructure

(i) Uses and other development -
a. maximise efficient use of existing infrastructure;
b. provide for the planned extension of urban infrastructure in an orderly and cost effective manner.

(ii) Uses and other development are serviced by infrastructure including -
a. reticulated water;
b. reticulated sewerage;
c. stormwater drainage;
d. constructed road access;
e. energy;
f. telecommunications;
g. waste and recycling collection.

(iii) Uses and other development reinforce an integrated, legible, efficient, safe and attractive movement network that -
a. incorporate a full range of movement modes including public transport, passenger vehicles and delivery and freight vehicles, pedestrians and cyclists;
b. provide pedestrian and cycle connectivity and ease of mobility both within the centre and with surrounding neighbourhoods, and public transport stops, stations and interchanges;
c. minimise conflicts between traffic using the centre and through traffic and between pedestrians, cyclists and passenger and delivery vehicles;
d. maximise opportunities for pedestrian and cycle paths throughout the centre.

Note -

Summary of Major Centre Zone Sub-areas	
Sub-area	**Description**
Sub-area MC1	Capalaba - central core
Sub-area MC2	Capalaba - to the north of Old Cleveland Road
Sub-area MC3	Cleveland - Bloomfield Street and surrounds
Sub-area MC4	Cleveland - Harbour Precinct
Sub-area MC5	Cleveland - Cleveland Railway Station Precinct
Sub-area MC6	Cleveland - Performing Arts Precinct
Sub-area MC7	Cleveland - Waterloo Street, Russell Street, Bloomfield Street and Ross Court
Sub-area MC8	Cleveland - Waterloo Street, Ross Court, Bloomfield Street and Princess Street
Sub-area MC9	Victoria Point - North of Bunker Road
Sub-area MC10	Victoria Point - south east corner of Colburn Avenue and Cleveland/Redland Bay Road
Sub-area MC11	Victoria Point - east of Cleveland/Redland Bay Road to the rear of land on the south east corner of Colburn Avenue and Cleveland Redland Bay Road
Sub-area MC12	Victoria Point - South of Bunker Road on Cleveland/Redland Bay Road

4.12.8 Specific Outcomes and Probable Solutions applicable to Assessable Development

Assessable Development			
Specific Outcomes		**Probable Solutions**	
	Uses, Role and Function -		
S1.1	Uses identified as inconsistent in Table 1 are not established in the zone.	**P1.1**	(1) No probable solution identified.
S1.2	(1) Significant centre development greater than 4000m^2 in gross floor area demonstrates - (a) positive economic and social benefits to the community; (b) enhances and protects the role and function of the City's major centres; (c) integration of the building with the desired built form and character of the centre. **Note -** Refer to Part 11 - Planning Scheme Policy 12 - Social and Economic Impact Assessment.	**P1.2**	(1) No probable solution identified.
S1.3	Residential and tourist accommodation uses are designed and integrated as part of a mixed use development ensuring the maintenance of active street frontages at ground level.	**P1.3**	(1) No probable solution identified.
S1.4	(1) Sub-area MC1 – encourages key businesses and facilities to concentrate in the area and pursue opportunities for mixed use development; (2) Sub-area MC2 – does not have the intensity and activity of the sub-area MC1, but provides a key supporting business and commercial area and because of proximity to the open space to the north fronting Tingalpa Creek, encourages mixed use residential development.	**P1.4**	(1) No probable solution identified.
S1.5	(1) Sub-area MC3 – being the centre core and the heart of the Cleveland Centre encourages key businesses and facilities to concentrate in this area and pursue opportunities for mixed use development; (2) Sub-area MC4 – encourages mixed use development that	**P1.5**	(1) No probable solution identified.

Assessable Development			
Specific Outcomes		**Probable Solutions**	
	incorporates apartment buildings, commercial activities and limited retail uses including tourist shopping and restaurants; (3) Sub-area MC5 – encourages mixed use development that is compatible with rail uses and incorporates a passenger terminal, interchange, apartment buildings, commercial activities, retail uses of a limited floor area and tourism opportunities; (4) Sub- area MC6 – provides for uses that cater primarily for significant civic developments such as cultural centres, courthouses, libraries, Government and municipal services such as police stations and community halls; (5) Sub-area MC7 – encourages a range of uses that supports the Cleveland Centre and which ordinarily cannot be located within a centre by the nature of the types of the uses or their site cover requirements; (6) Sub-area MC8 – encourages potential redevelopment for apartment buildings and a range of other non-retail uses that are appropriate on the land and support the centre but do not result in the fragmentation or decentralisation of the centre's business core.		
S1.6	(1) Sub-area MC9 encourages – (a) retail, commercial, educational, entertainment, community and recreation uses in areas requiring high visual exposure with commercial, bulky goods showrooms and retail warehouses located within areas close to Eprapah Creek; (b) entertainment activities such as cinemas and restaurants with residential development being accommodated within the northern portion of MC9 or part of mixed use development; (2) Sub-area MC10 encourages activities that are highly	**P1.6**	(1) No probable solution identified.

Assessable Development			
Specific Outcomes		**Probable Solutions**	
	accessible from Colburn Avenue and Cleveland-Redland Bay Road such as – (a) convenience retailing, retail showrooms and service industry up to 500m^2 in gross floor area; (b) service shops, medical facilities and employment based activities; (3) Sub-area MC11 encourages – (a) service, convenience, education, hospitality and other businesses that offer high accessibility to residents and which require exposure to passing traffic; (b) commercial offices, retail showrooms, refreshment establishments, shops, health care centre, hotel and service station; (c) indoor recreation centres, service industry, education facilities and display and sales activities where achieving design and siting assessment criteria; (4) Sub-area MC12 encourages higher order – (a) convenience retail and shopping including shops such as shopping centres, discounted department store and supermarkets, and commercial premises. (b) boutique, specialist retail shops and refreshment establishments offering outdoor dining. **Note -** Refer to Part 11 – Planning Scheme Policy 12 – Social and Economic Impact Assessment.		
S2.1	Built Form and Density – (1) The height of buildings - (a) does not overwhelm or dominate the centre; (b) respects the desired streetscape; (c) ensures a high quality appearance when viewed from both within and external to the centre; (2) In sub-area MC1 at Capalaba - building height within the	**P2.1**	(1) Buildings or structures do not exceed - (a) the height limits as shown on the following - (i) Map 1 - Capalaba Height Limits; or (ii) Map 2 - Cleveland height Limits; or (b) 14 metres in sub-areas MC9, MC10, MC11 and MC12 at Victoria Point;

Assessable Development			
Specific Outcomes		**Probable Solutions**	
	centre - (a) establishes a critical mass through increased building height; (b) identifies the heart of the centre through physical form; (c) limits overshadowing impacts on public places, in particular Capalaba Place; (3) In sub-areas MC3, MC4, MC5, MC6, MC7 and MC8 at Cleveland building height - (a) maintains the ability to view the vegetated backdrop of North Stradbroke Island above buildings when approaching Cleveland along Shore Street, particularly from the section of road between Delancey and Grant Street; (b) maintains the existing view corridor down Bloomfield Street, through the Raby Bay Harbour to Moreton Bay; (c) limits overshadowing impacts on public places including Bloomfield Street, the park in Bloomfield Street and the parklands of Raby Bay Harbour, specifically during winter months; (d) addresses streetscape character and amenity where adjoining a zone requiring a lower building height.		(2) Buildings or structures do not exceed the height limits shown on Map 1 - Capalaba Height Limits; (3) Buildings or structures do not exceed the height limits shown on Map 2 - Cleveland Height Limits.
S2.2	(1) Podium height in sub-areas MC1 and MC2 at Capalaba reflects - (a) desired built form; (b) recognition that the centre is the major retailing centre within the City; (2) Podium Height in sub-areas MC3, MC4, MC5, MC7 and MC8 at Cleveland reflects - (a) Cleveland's active streets and walkable centre; (b) the detail and quality of the public realm by ensuring buildings do not dominate or overshadow public or civic places; (3) Podium height in sub-area MC9, MC10, MC11 and MC12	**P2.2**	(1) The podium height above the mid-point of the main frontage of the site does not exceed - (a) 11 metres in sub-areas MC1; (b) 8 metres in sub-areas MC2; (2) The podium height above the mid point of the main frontage of the site does not exceed - (a) 11 metres in sub-area MC5; (b) 8 metres in sub-areas MC3, MC4, MC7 and MC8; (3) The podium height above the mid point of the main frontage of the site does not exceed 8 metres in sub-areas MC9, MC10, MC11 and MC12. **Note -**

Assessable Development			
Specific Outcomes		**Probable Solutions**	
	at Victoria Point reflects the intended character of the Victoria Point Centre as a vibrant and pedestrian orientated centre.		■ Refer to Diagrams 1a and 1b - Podium Heights. ■ Podium heights do not apply in sub-area MC6 - Cleveland.
S2.3	(1) Setbacks are consistent with the desired streetscape for that part of the centre; (2) Setbacks minimise impacts on adjacent residential areas and provide a transition between the centre activities and adjoining zones; (3) Setbacks for above podium development - (a) allow light penetration and reduces building bulk; (b) enhance the character of the streetscape; (c) maintain a sense of open space and pedestrian scale in public and pedestrian areas; (4) Side and rear boundary setbacks for above podium development ensure buildings are well separated from each other to allow light penetration, air circulation and outlook.	**P2.3**	(1) Setbacks on the primary street frontage are - (a) a minimum of 6 metres from the kerb at pavement level to provide pedestrian space; or (b) setback to match existing or approved buildings in the street; (2) Where a rear and/or side boundary adjoins a residential zone - (a) the building is setback from the boundary a minimum of 3 metres or half the height of the building at that point, whichever is greater; (b) this boundary is landscaped with trees that are capable of growing to 5 metres in height within 5 years of planting; (c) is supported by a 2 metre high acoustic and visual screen fence along the entire length of the boundary; (3) Above podium development is setback a minimum of 6 metres from the building alignment; (4) Above podium development is setback a minimum of - (a) 5 metres from any side boundary; or (b) where the adjoining site contains a blank wall on a common boundary with the site, the new building is built to that boundary; (c) 6 metres from the rear building alignment. **Note -** Refer to - ■ Diagram 2 - Above Podium Street Setbacks; ■ Diagram 3 - Above Podium Side and Rear Setbacks.
S2.4	Residential and tourist accommodation uses are maximised to ensure a greater number of residents and tourists can reside or be accommodated in close proximity to services, attractions, facilities and employment opportunities within	**P2.4**	No probable solution identified.

Assessable Development			
Specific Outcomes		**Probable Solutions**	
	the centre.		
S2.5	(1) Above podium development only occurs where the site has adequate dimensions and size that allows for physical and visual integration with the centre; (2) Building design and layout incorporates architectural elements that - (a) reinforce a high quality centre environment; (b) exhibit a high degree of interest through the use of colour, angles, materials and shadows; (c) provide functional and attractive facades that contribute to a high quality built form and streetscape along all road frontages; (d) ensures high levels of physical and visual interaction and access with adjoining pedestrian areas at ground level; (e) minimise any adverse overshadowing and reflective impacts on public and civic places and adjoining zones; (f) provide physical connections and linkages between buildings, and between buildings and public places, to encourage pedestrian movement; (g) ensure buildings have their primary address to the primary street frontage and provide an active frontage to all secondary street frontages; (h) incorporate covered pedestrian walkways that provide direct access to shops and civic places and links all areas of the centre; (3) Building design of gateway sites is reinforced by ensuring - (a) buildings are higher or at least as high as adjoining buildings; (b) the built form contributes to the sense of arrival to the centre due to their landmark location.	**P2.5**	(1) Above podium development only occurs where the development site has a minimum primary street frontage of 40 metres or more; (2) No probable solution identified; (3) No probable solution identified. **Note -** Primary and secondary frontages and gateway sites are identified in the following - ■ Diagram 4 - Capalaba Key Elements, ■ Diagram 5 - Cleveland Key Elements; ■ Diagram 6 - Victoria Point Key Elements.
S2.6	(1) Building design in sub-areas	**P2.6**	(1) No probable solution identified.

Assessable Development			
Specific Outcomes		**Probable Solutions**	
	MC1 and MC2 at Capalaba ensure buildings - (a) between Redland Bay Road and Noeleen Street and to the south of Dollery Road - (i) are designed to allow for pedestrian movement between Redland Bay Road and Noeleen Street and reinforce the connection between Capalaba Place, Capalaba Central and Capalaba Park Shopping Centres; (ii) address both streets recognising that car parking will be located on the Redland Bay Road frontage; (iii) address the bus station plaza and interact with this place; (b) fronting Capalaba Place are designed to - (i) maintain natural light and solar access to the public place; (ii) maintain the ability for centre activities to interact with this public place; (iii) delineate the linkage function of the public space between the existing Capalaba Central and Capalaba Park shopping centre; (c) between Dollery Road and Raymond Street and to the south of Old Cleveland Road - (i) address Old Cleveland Road; (ii) are designed to promote pedestrian and vehicular access through to Lorraine Street.		
S2.7	(1) Building design in sub-area MC5 ensures - (a) activity within the mixed use development focuses on public places including Shore Street and in particular the Harbour Side Park;	**P2.7**	(1) No probable solution identified; (2) No probable solution identified; (3) No probable solution identified.

Assessable Development			
Specific Outcomes		**Probable Solutions**	
	(b) retail elements and other activity generating uses within the centre are located primarily on the ground floor interacting with the adjacent public space; (c) multi-deck car parking areas are designed to ensure they do not become the dominant element of the development through external articulation and façade treatments; (d) a landmark development is created to announce entry to the centre that - (i) reinforces it's public role and function; (ii) has an effective interface with the public domain; (iii) respects but takes advantage of its visual prominence; (iv) uses high quality finishes; (2) Building design in sub-area MC6 ensures a landmark development is created to the north of Middle Street that - (a) architecturally reflects the importance of the civic centre within Cleveland; (b) responds to the importance of the site at the entrance to the centre; (c) strengthens the connection between the site and the centre; (3) Building design in sub-area MC8 addresses the relationship of the sub-area to the rest of the centre by - (a) incorporating linkages to the centre; (b) addressing the relationship to adjacent land uses, and in particular the Redland Showgrounds.		
S2.8	(1) Building design in sub-area MC9 ensures - (a) buildings address the Bunker Road, Lakeside Street and the "main street"; (b) visual access to the lake; (c) the development of a Lakeside Plaza; (2) Building design in sub-areas	**P2.8**	(1) No probable solution identified; (2) No probable solution identified; (3) No probable solution identified. **Note -** Refer to Diagram 6 - Victoria Point - Key Elements.

Assessable Development			
Specific Outcomes		**Probable Solutions**	
	MC10 and MC11 ensure buildings address the Colburn Street and Cleveland/Redland Bay Road frontage as well as internal streets; (3) Building design in sub-area MC12 ensures - (a) the development of a Main Street; (b) the development of a "main street" at the southern end of the Main Street; (c) the development of a central mall entry which is highly visible from Cleveland/Redland Bay Road.		
	Linkages -		
S3.1	(1) Pedestrian permeability is maximised throughout the centre with pedestrian links established through mid blocks.	**P3.1**	(1) No probable solution identified. **Note -** To assist in achieving S3.1 refer to - ■ Diagram 4 - Capalaba Key Elements; ■ Diagram 5 - Cleveland Key Elements; ■ Diagram 6 - Victoria Point Key Elements.
S3.2	(1) In sub-areas MC1 and MC2 at Capalaba - development strengthens the two major pedestrian spines being - (a) an east/west spine linking Capalaba Central Shopping Centre, Capalaba Place, Capalaba Park Shopping Centre and Capalaba Regional Park; (b) a north/south spine linking the community facility sites on the north side of Old Cleveland Road with Capalaba Place, the bus station and Capalaba Park and Capalaba Central Shopping Centres.	**P3.2**	(1) No probable solution identified. **Note -** Refer to Diagram 4 - Capalaba Key Elements to assist in achieving S3.2.
S3.3	(1) In sub-areas MC3, MC4, MC5, MC6, MC7 and MC8 at Cleveland - development strengthens the pedestrian spines including - (a) a mid block north/south connection between Middle Street and the Cleveland Railway Station to the west	**P3.3**	(1) No probable solution identified. **Note -** Refer to Diagram 5 - Cleveland Key Elements to assist in achieving S3.3.

Assessable Development			
Specific Outcomes		**Probable Solutions**	
	of Bloomfield Street; (b) a mid block north/south connection between Middle Street and the harbourside development to the east of Bloomfield Street.		
S3.4	(1) In sub-areas MC9, MC10, MC11 and MC12 at Victoria Point - development strengthens pedestrian spines including - (a) the provision of a pedestrian promenade along the lake and Main Street in sub-area MC9; (b) a connection between sub-areas MC11 and MC12 across Cleveland/Redland bay Road; (c) a connection between sub-area MC9 and MC12 across Bunker Road joining the "main street"; (d) the provision of a "main street" in sub-area MC12.	**P3.4**	(1) No probable solution identified. **Note -** Refer to Diagram 6 - Victoria Point Key Elements to assist in achieving S3.4.
	Amenity -		
S4.1	High quality landscape and streetscape treatments, including planting, street art and furniture are provided to contribute to and enhance the overall attractiveness and function of the centre.	**P4.1**	No probable solution identified. **Note -** To assist in achieving S4.1 refer to - ■ Planning Scheme Policy 17 - Streetscape Design Manuals ■ Diagram 6 - Victoria Point Key Elements.
S4.2	Development does not impact on the cultural heritage values of a registered heritage place(s).	**P4.2**	No probable solution identified.
S4.3	(1) Where possible residential and tourist accommodation uses are capable of receiving solar access; (2) Buildings design maintains solar access to public and civic places within the centre.	**P4.3**	(1) No probable solution identified; (2) No probable solution identified.
S4.4	(1) Residential and tourist accommodation uses maximise privacy (visual and acoustic) through - (a) locating habitable rooms so they do not directly overlook habitable rooms of adjacent uses either within or adjoining the	**P4.4**	(1) No probable solution identified.

Assessable Development			
Specific Outcomes		**Probable Solutions**	
	development; (b) separating noise generating areas from sleeping areas.		
S4.5	(1) Residential and tourist accommodation uses ensure private and communal open space areas are - (a) clearly defined for their intended uses and use; (b) easily accessible from living or common areas; (c) useable in size and dimension.	**P4.5**	(1) No probably solution identified.
S4.6	(1) Artificial light does not result in unreasonable disturbance to any person or activity; (2) Artificial light is designed to avoid spilling onto adjoining zones; (3) Glare and reflection of the sun are minimised through material and glazing choice.	**P4.6**	(1) No probable solution identified; (2) Where adjoining a residential zone the vertical illumination resulting from direct, reflected or other incidental light emanating from non residential uses on the site does not exceed 8 lux when measured at any point 1.5 metres outside the boundary at or above ground level; (3) No probable solution identified.
S4.7	(1) Noise generated by the use or other development is compatible with the experience in a centre environment; (2) Where residential and tourist accommodation uses are incorporated as part of a mixed use development or the development adjoins a residential zone, non-residential uses are located and designed to ameliorate noise impacts.	**P4.7**	(1) No probable solution identified; (2) The use or other development does not generate noise, measured as the $L_{Amax,adj,T}$ parameter, at the boundary of the nearest residential zone, greater than - (a) 5dB(A) above the background noise level between 7 am to 10 pm; or (b) 3dB(A) above the background noise level between 10 pm to 7 am. **Note -** The $L_{Amax,adj,T}$ parameter is defined in the *Noise Measurement Manual* (Environmental Protection Agency 2000).
S4.8	Air quality impacts are eliminated or mitigated to a level that is compatible with a centre environment.	**P4.8**	No probable solution identified. **Note -** Refer to Part 11 - Planning Scheme Policy 5 - Environmental Emissions for further information on noise and air quality impacts.
S4.9	(1) Uses and other development reinforce the maintenance of high standard of centre amenity	**P4.9**	(1) No probable solution identified.

Assessable Development			
Specific Outcomes		**Probable Solutions**	
	by - (a) locating air conditioning units and/or refrigeration units so that they are not visually obtrusive and do not cause adverse visual or noise impacts on adjoining premises; (b) locating car parking and servicing areas to minimise impacts on adjoining premises and on the streetscape.		
S4.10	(1) Uses and other development are designed in accordance with the principles of Crime Prevention through Environmental Design (CPTED) to assist in crime prevention by - (a) orientating building towards the street to provide opportunities for casual surveillance of public places; (b) being designed and well lit to ensure safety and casual surveillance of car parking areas, public places, open spaces and pedestrian and cycle paths.	**P4.10**	(1) No probable solution identified. **Note -** To assist in achieving S4.10 refer to Planning Scheme Policy 16 - Safer By Design.
	Environment -		
S5.1	(1) Uses and other development are consistent with the effective protection of environmental values from external impacts, including - (a) stormwater run-off; (b) water quality; (c) erosion and sediment run-off; (d) pollution control.	**S5.1**	(1) No probable solution identified.
S5.2	Uses and other development minimise environmental impacts by reducing the need for excavation and fill external to areas required for building, basement car parking and facilities associated with the use.	**P5.2**	No probable solution identified. **Note -** Refer to Part 7 - Division 6 - Excavation and Fill Code for assessment criteria where the site requires earthworks.
S5.3	(1) Landscaping is designed to - (a) incorporate plant species that are native or characteristic to the area; (b) recognise and enhance	**P5.3**	(1) Species used for landscaping are selected from the native plants listed in Part 9 - (a) Schedule 10 - Vegetation Species List;

Assessable Development			
Specific Outcomes		**Probable Solutions**	
	landscape and streetscape character of the centre; (c) incorporate landscaping as a component of the stormwater management system; (d) incorporate landscaping on podium levels, and balconies and verandahs fronting the street below podium level.		(b) Schedule 9 - Street Trees where within the road reserve. **Note -** For additional assessment criteria refer to Part 8 - ■ Division 8 - Landscape Code; ■ Division 9 - Stormwater Management Code.
	Infrastructure -		
S6.1	Infrastructure is provided to be readily integrated with existing systems and facilities for the orderly provision of future systems.	**P6.1**	No probable solution identified.
S6.2	Infrastructure is designed, located, constructed and managed in a manner that recognises and contributes to the sense of place and attractiveness of the centre.	**P6.2**	No probable solution identified.
S6.3	(1) Uses and other development are serviced by infrastructure, including - (a) reticulated water; (b) reticulated sewerage; (c) stormwater drainage; (d) constructed road access; (e) energy; (f) telecommunications; (g) waste and recycling collection facilities.	**P6.3**	(1) No probable solution identified.
S6.4	(1) Waste and recycling is managed to minimise impacts on the environment and nearby premises by - (a) locating waste and recycling storage areas to protect amenity and to provide safe manual handling of containers; (b) screening waste and recycling container storage areas from view; (c) providing for the cleansing of containers in a manner that does not cause adverse environmental impacts; (2) Uses and other development - (a) provide safe and efficient manoeuvring for waste collection vehicles; (b) ensure all bulk waste and recycling containers are	**P6.4**	(1) No probable solution identified. (2) No probable solution identified. (3) No probable solution identified. **Note -** Refer to Part 11 - Planning Scheme Policy 9 - Infrastructure Works – Chapter 16 – Waste Management for further information on waste and recycling container volume, storage, servicing, screening and cleansing. Refer to Part 8 - Division 1 - Access and Parking Code for waste collection vehicle servicing and manoeuvring assessment criteria.

Assessable Development			
Specific Outcomes		**Probable Solutions**	
	serviced off-street and not on roads with public access; (c) ensure sufficient vertical clearance for container servicing; (d) ensure unobstructed access to containers by collection vehicles; (3) Waste and recycling storage is designed and located to - (a) provide adequate container volume to contain the waste and recyclables; (b) provide recycle containers in an equivalent or greater volume to waste containers; (c) provide a dedicated waste and recycling container storage area that is convenient and safe to use; (d) ensure containers are located on impermeable surfaces.		
S6.5	(1) Uses and other development maximise the safe, convenient and comfortable movement of public transport passengers, pedestrians and cyclists by providing - (a) links to public transport routes, stops and interchanges in the most accessible and convenient locations to maximise their use; (b) pedestrian and cycle paths, throughout the centre and linking to surrounding areas; (c) pathways, building entrances, amenities and seating that support accessibility for people with special needs.	**P6.5**	(1) No probable solution identified. **Note -** For additional assessment criteria refer to Part 8 - ■ Division 1 - Access and Parking Code for further assessment criteria related to access and internal movement; ■ Division 7 - Infrastructure Works Code for further assessment criteria on provision, design and construction of utility infrastructure and pedestrian and cycle paths.
S6.6	(1) Opportunities for cycling as a model choice for employees and customers are provided through - (a) clearly defined on-site paths and facilities; (b) secure cycle storage areas and facilities, including showers and lockers for employees; (c) provision of cycle racks for customers.	**P6.6**	(1) Cycle facilities include - *(a)* on-site bicycle facilities that are designed and constructed in accordance with *AUSTROAD's Traffic Engineering Practice,* Part 14 - Bicycles*;* (b) the following for employees - (i) 1 bicycle space per 200m^2 of gross floor area; (ii) 1 personal locker per 2 bicycle parking spaces;

Assessable Development			
Specific Outcomes		**Probable Solutions**	
			(iii) 1 shower cubicle with a change area per 5 bicycle space; or (iv) 1 shower cubicle with a change area if less than 5 bicycle spaces are required; (c) 1 bicycle space per 200m^2 of gross floor area of customers, to a maximum of 10 spaces.
S6.7	(1) The design and layout of vehicular access, parking facilities and service delivery areas are located - (a) to minimise disruption to traffic flow, promote efficiency and public transport priority and minimise impact on adjoining areas; (b) and designed to minimise conflicts between pedestrians and cyclists with vehicles and service delivery vehicles and cars; (c) to maintain a high quality built form and streetscape along all road frontages; (d) to provide for integrated car parks and service delivery areas.	**P6.7**	(1) No probable solution identified.
S6.8	(1) Where on-street parking cannot be provided, car parking is provided in a mid-block location or behind the main frontage of the development, to ensure that - (a) large expanses of car parking are not the first impression and introduction to a centre development; (b) buildings address the street.	**P6.8**	(1) No probable solution identified. **Note -** To assist in achieving S6.8 refer to - ■ Diagram 4 - Capalaba Key Elements; ■ Diagram 5 - Cleveland Key Elements; ■ Diagram 6 - Victoria Point Key Elements.
S6.9	Within sub-area MC11 - Victoria Point local bus stops are provided on the main internal connection road, near the shopping centre.	**P6.9**	No probable solution identified.
S6.10	(1) Within sub-area MC12 - Victoria Point - Koala Park - (a) a line haul, commuter, bus station is provided adjacent to the southern mall entry; (b) a commuter car parking facility is provided at the southern end of the sub-area within comfortable	**P6.10**	(1) No probable solution identified.

Assessable Development			
Specific Outcomes		**Probable Solutions**	
	walking distance of the bus station; (c) local bus stops are provided at the southern end of the "main street", near the plaza.		
S6.11	Community infrastructure is able to function effectively during and immediately after flood events.	**P6.11**	Community infrastructure is located at or above the recommended flood levels in Table 2 - Recommended Flood Levels or Community Infrastructure.

Table 1 - Inconsistent Uses

Inconsistent Uses
Aged Persons and Special Needs Housing - in sub-area MC7; or where not part of a mixed use development
Agriculture
Airport
Animal Keeping
Apartment Building - in sub-area MC7; or where not part of a mixed used development
Bed and Breakfast
Brothel
Bulky Goods Showroom - in sub-area MC6, sub-area MC8
Cemetery
Dual Occupancy
Dwelling House
Extractive Industry
Forestry
General Industry
Heavy Industry
High Impact Industry
Home Business - except where in a dwelling unit approved under this planning scheme
Hotel - in sub-area MC7, sub-area MC8
Intensive Agriculture
Landscape Supply Depot - except where in sub-area MC7
Marine Services
Mobile Home Park
Multiple Dwelling
Nightclub - in sub-area MC8
Relatives Apartment
Retail Warehouse - in sub-area MC6, sub-area MC8
Roadside Stall
Rural Enterprise
Service Industry - in sub-area MC6 and sub-area MC8; or in sub-areas MC1, sub-area MC2, sub-area MC3, sub-area MC4, sub-area MC5, sub-area MC9 and sub-area MC12 - where having more than 100m^2 gross floor area; or in sub-area MC7, sub-area MC10 and sub-area MC11 where having more than 500m^2 gross floor area
Service Station - where in sub-area MC5, sub-area MC6
Shop - in sub-area MC8; or in sub-area MC2 - where having more than 1000m^2 gross floor area; or in sub-area MC7 - where having more than 200m^2 gross floor area
Small Lot House
Tourist Accommodation - in sub-area MC7; or where not part of a mixed use development
Tourist Park
Vehicle Depot
Vehicle Repair Premises - if not in conjunction with a service station; or not in sub-area MC7
Warehouse - except in sub-area MC8, sub-area MC9 and sub-area MC11

Table 2 - Recommended Flood Levels for Community Infrastructure

Type of Community Infrastructure	Recommended Flood Level AEP (ARI)
Emergency services, other than police facilities	0.2% (1 in 500 year ARI)
Emergency shelters	0.5% (1 in 200 years ARI)
Police facilities	0.5% (1 in 200 years ARI)
Hospitals and associated facilities	0.2% (1 in 500 years ARI)
Stores of valuable records or items of historic or cultural significance, such as galleries and libraries	0.5% (1 in 200 years ARI)
Power stations	0.2% (1 in 500 years ARI)
Major switch yards	0.2% (1 in 500 years ARI)
Substations	0.5% (1 in 200 years ARI)
Sewerage treatment plants	1% (1 in 100 years ARI)
Water treatment plants	0.5% (1 in 200 years ARI)
■ State-controlled roads ■ Works of an electricity entity not otherwise listed in this table ■ Railway lines, stations and associated facilities ■ Aviation facilities ■ Communication network facilities	No specific recommended flood level by development proponents should ensure that the infrastructure is optimally located and designed to achieve suitable levels of service, having regard to the processes and policies of the administering government agency.

Reference - *State Planning Policy Guideline 1/03: Mitigating the Adverse Impacts of Flood, Bushfire and Landslide.*

Map 1 - Capalaba Height Limits

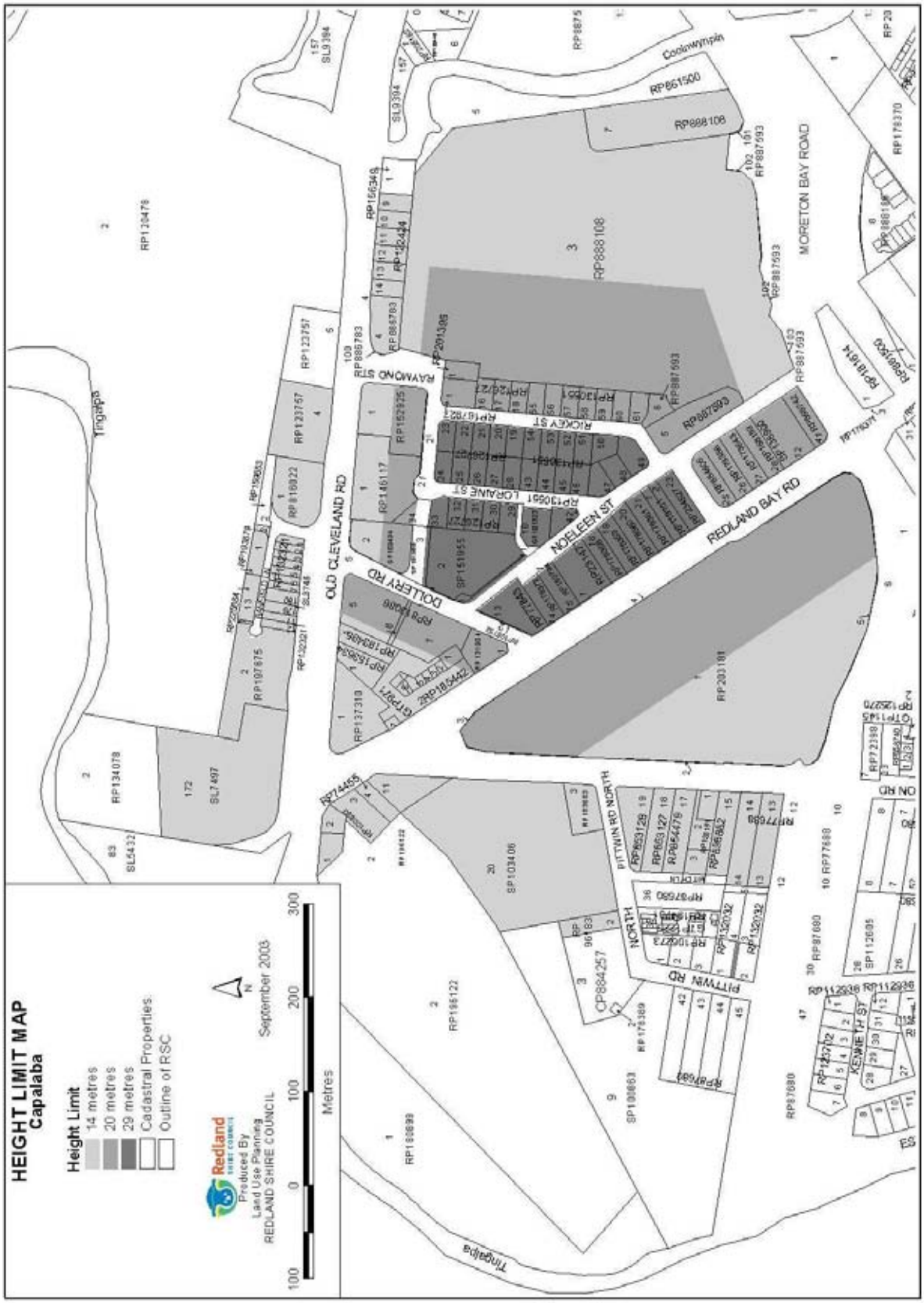

Major Centre Zone

Map 2 - Cleveland Height Limits

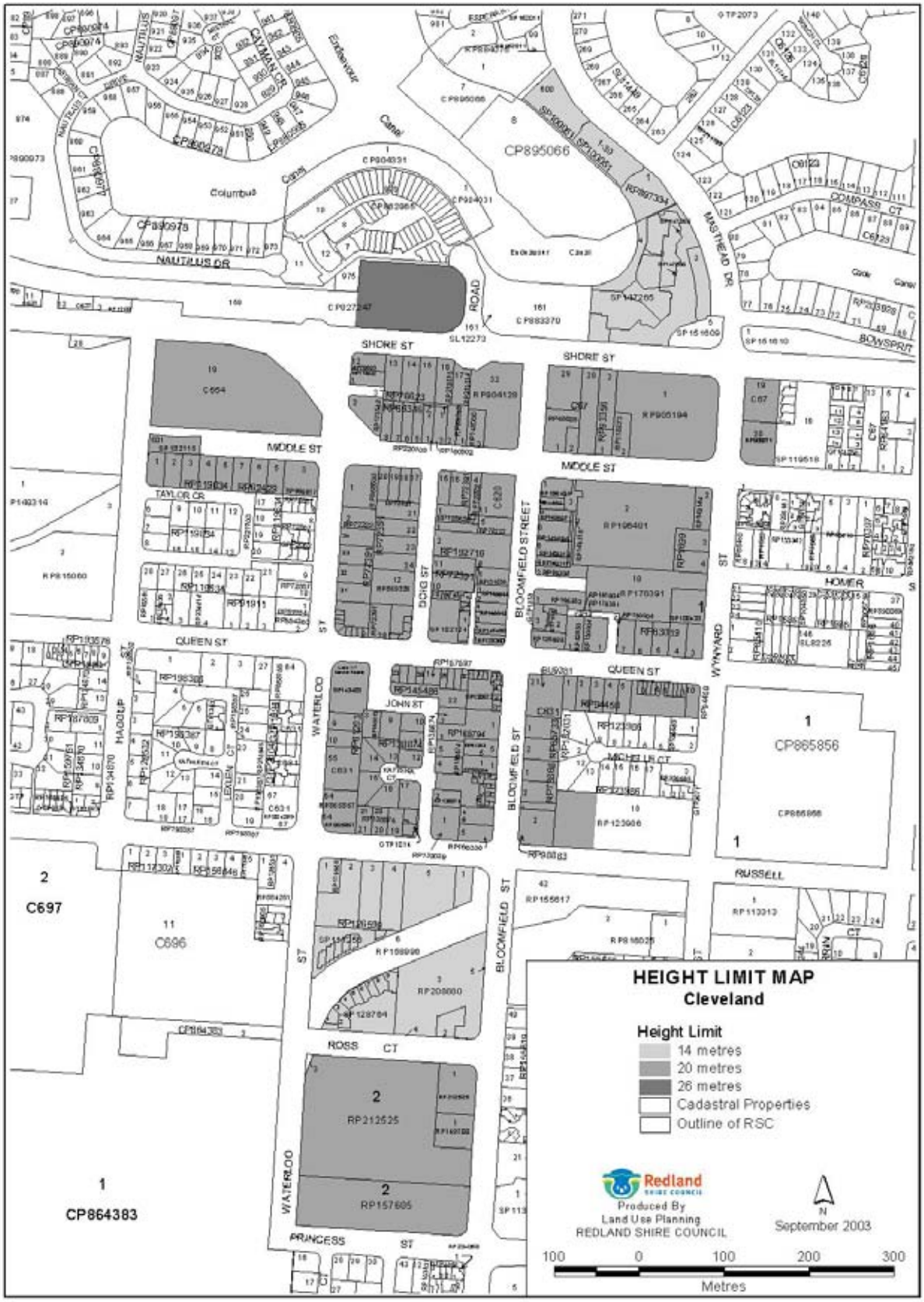

Major Centre Zone

Diagram 1a - Podium Heights in sub-areas MC2, MC3, MC4, MC7, MC8, MC9, MC10, MC11, MC12

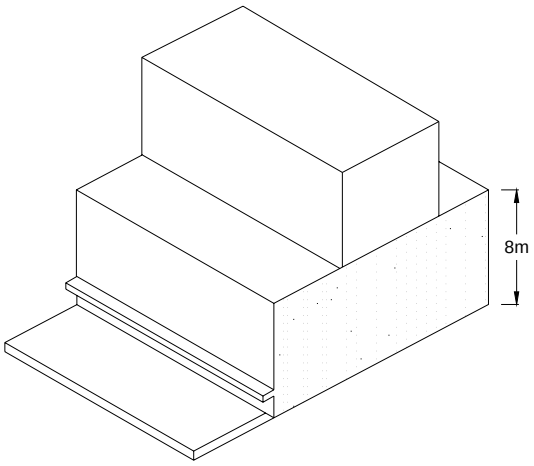

Diagram 1b - Podium Height in sub-areas MC1 and MC5

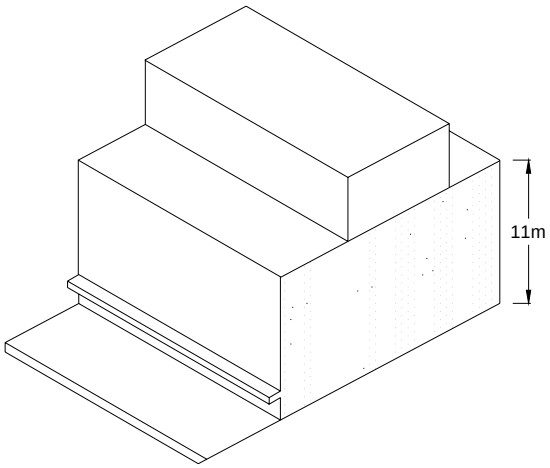

Diagram 2 - Above Podium Street Setbacks

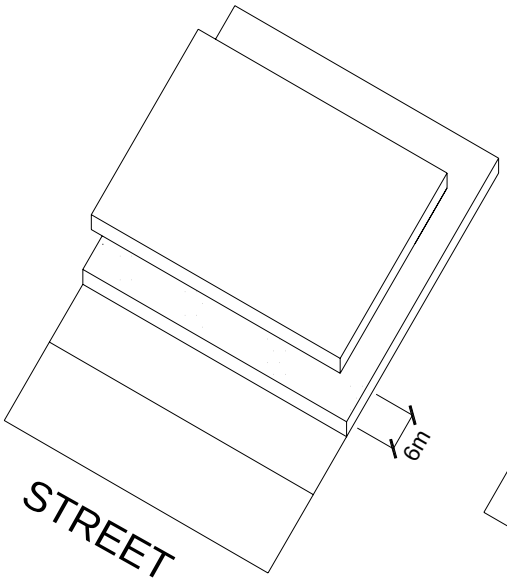

Diagram 3 - Above Podium Side and Rear Setbacks

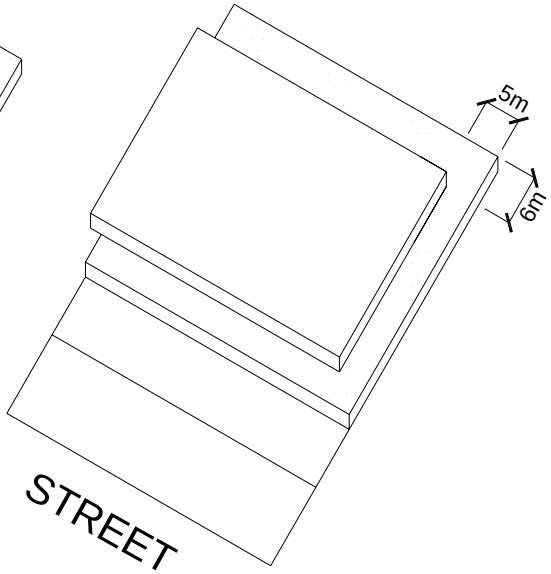

Diagram 4 - Capalaba Key Elements

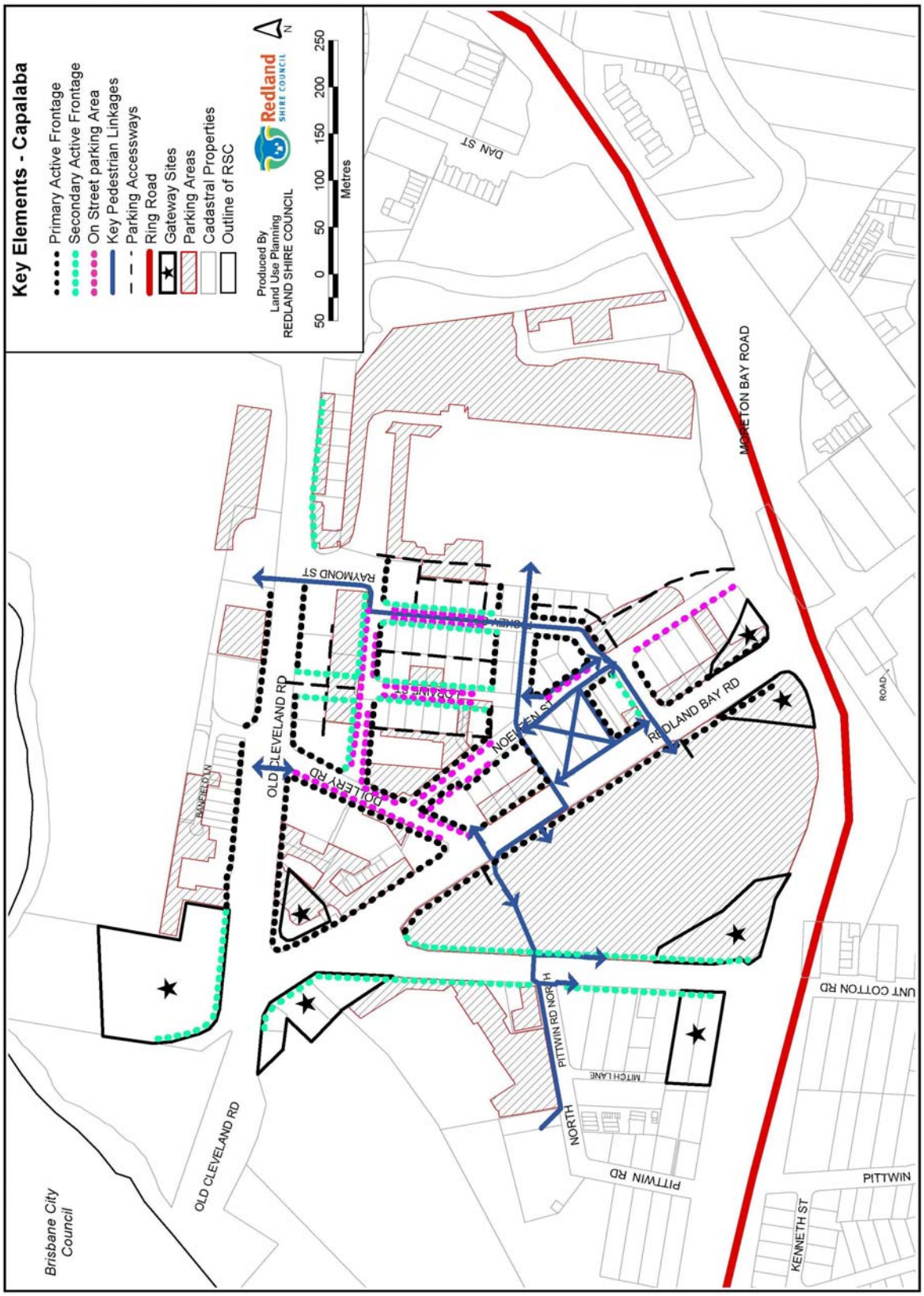

Major Centre Zone

Diagram 5 - Cleveland Key Elements

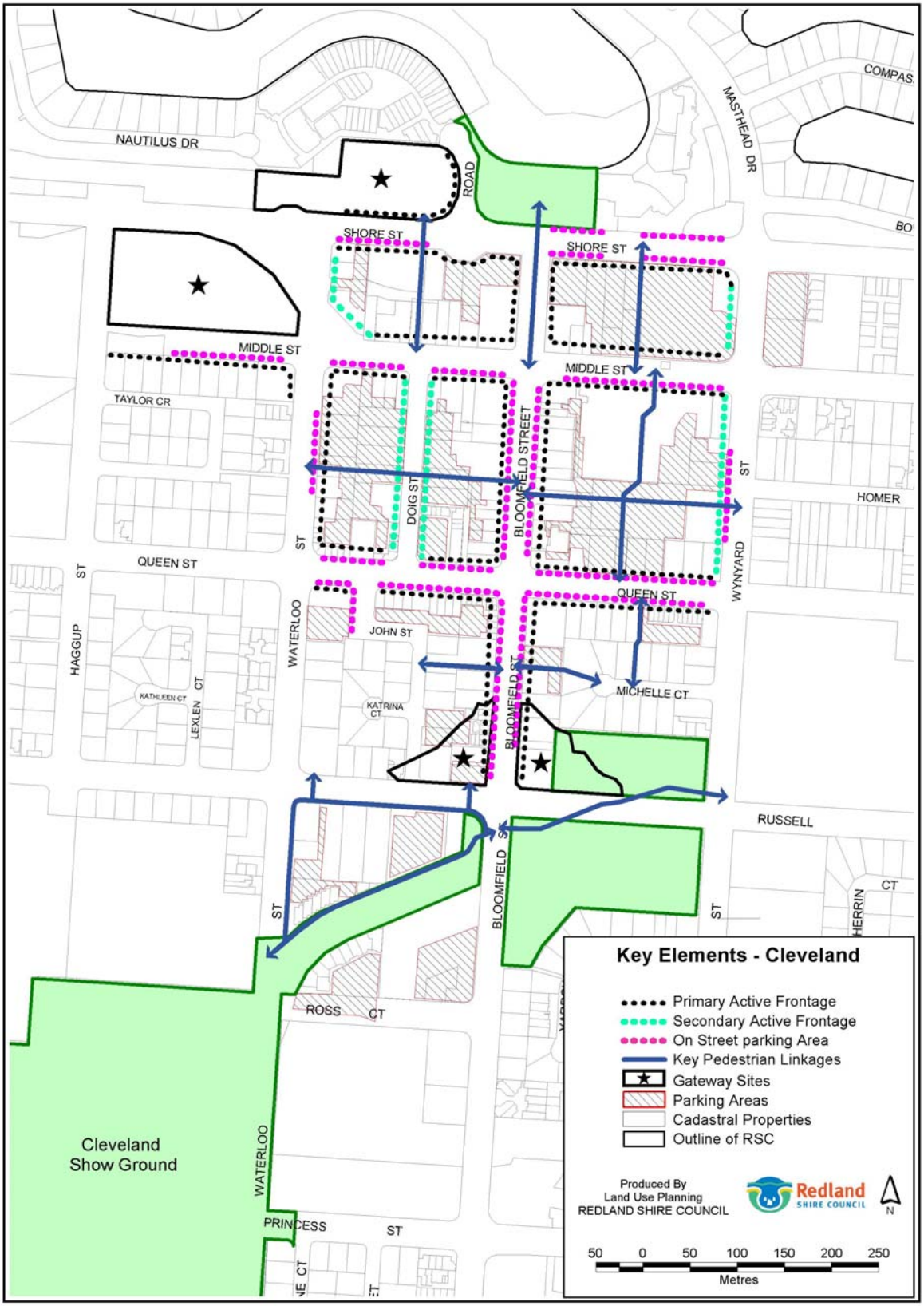

Diagram 6 - Victoria Point Key Elements

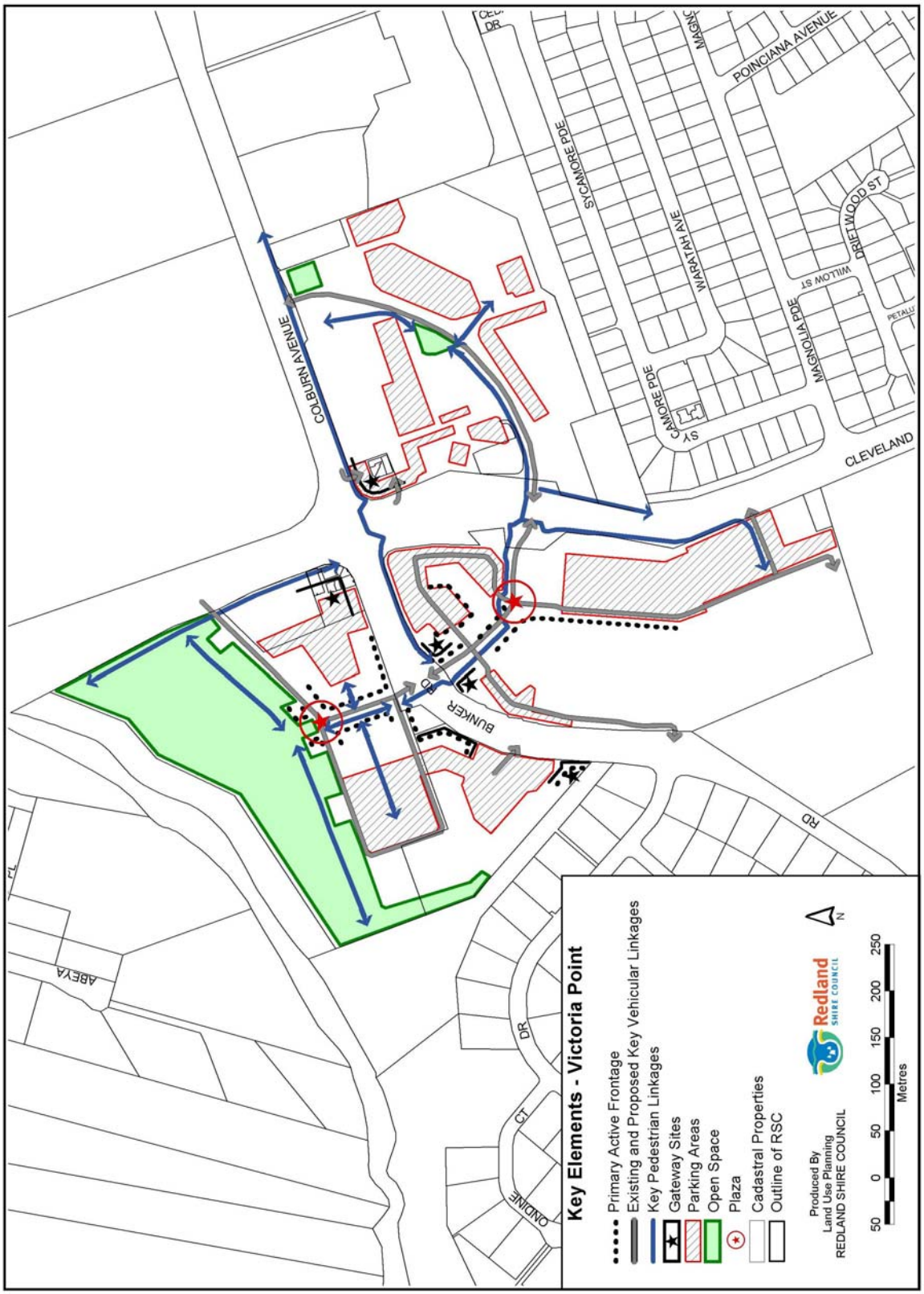

Major Centre Zone

Division 13 - Marine Activity Zone

4.13.1 Introduction

(1) This division contains the provisions for the Marine Activity Zone. They are -

(a) The Marine Activity Zone Tables of Assessment, that incorporates -
- (i) Levels of assessment for development in the Marine Activity Zone (section 4.13.2);
- (ii) Assessment criteria for development in the Marine Activity Zone (section 4.13.3);
- (iii) Marine Activity Zone - Table of Assessment for Material Change of Use of Premises (section 4.13.4);
- (iv) Marine Activity Zone - Table of Assessment for Other Development not associated with a Material Change of Use of Premises (section 4.13.5).

(b) The Marine Activity Zone Code, that incorporates -
- (i) Compliance with the Marine Activity Zone Code (section 4.13.6);
- (ii) Overall Outcomes for the Marine Activity Zone Code (section 4.13.7);
- (iii) Specific Outcomes and Probable Solutions applicable to Assessable Development (section 4.13.8).

4.13.2 Levels of assessment for development in the Marine Activity Zone

(2) Sections 4.13.4 and 4.13.5 identify the level of assessment for development in the Marine Activity Zone, as follows -

(a) section 4.13.4 Marine Activity Zone - Table of Assessment for Making a Material Change of Use of Premises[4.104] -
- (i) column 1 identifies uses that are exempt, self-assessable or assessable;
- (ii) column 2 identifies the level of assessment for the uses listed in column 1;
- (iii) the use is impact assessable where -
  - a. it is defined in Part 9 - Schedule 3 - Dictionary, Division 1 - Uses and is not listed in column 1; or
  - b. it is listed in column 1 and does not comply with the level of assessment qualifications listed in column 2; or
  - c. it is not defined in Part 9 - Schedule 3 - Dictionary, Division 1 - Uses.

(b) section 4.13.5 Marine Activity Zone - Table of Assessment for Other Development not associated with a Material Change of Use of Premises -
- (i) column 1 identifies other development that is exempt, self-assessable or assessable;
- (ii) column 2 identifies the level of assessment for other development listed in column 1;
- (iii) where the other development is not listed in column 1 it is exempt.

(3) Overlays may alter the level of assessment identified in (1) (a) and (b)[4.105].

[4.104] Works associated with an application for a material change of use of premises may be assessed together with the material change of use.

[4.105] Refer to Part 5 - Overlays to determine the level of assessment for the use or other development where an Overlay affects the lot and Part 1, section 1.2.5(10)(f) that explains how the highest level of assessment applies.

4.13.3 Assessment criteria for development in the Marine Activity Zone

(4) Development in the Marine Activity Zone is assessed against the assessment criteria listed in column 3 of sections 4.13.4 and 4.13.5, as follows -

(a) acceptable solutions of applicable codes for self-assessable development; or

(b) applicable codes for code assessable development.

(5) Self-assessable development that does not comply with all the acceptable solutions of the applicable codes is Assessable Development.

(6) Impact assessable development will be assessed against all relevant provisions of the Redlands Planning Scheme.

Note -

- The level of assessment indicated within section 4.13.4 - Marine Activity Zone - Table of Assessment for Material Change of Use of Premises may be affected by Division 2 of the Regulatory Provisions of the *SEQ Regional Plan 2005-2026.*
- The level of assessment for reconfiguration as indicated within section 4.13.5 - Marine Activity - Table of Assessment for Other Development not associated with a Material Change of Use of Premises, where within the Regional Landscape and Rural Production Area or Investigation Area of the *SEQ Regional Plan 2005-2026* -
  - complies with Division 3 of the Regulatory Provisions;
  - has a minimum lot size of 100 hectares, unless the subdivision meets an exclusion documented in Division 3.

Note -

Summary of Marine Activity Zone Sub-area	
Sub-area	**Description**
Sub-area MA1	Toondah Harbour, Cleveland and Weinam Creek, Redland Bay
Sub-area MA2	Beveridge Road
Sub-area MA3	Dunwich on North Stradbroke Island

4.13.4 Marine Activity Zone - Table of Assessment for Material Change of Use of Premises

Marine Activity Zone - Table of Assessment for Material Change of Use of Premises

column 1	column 2	column 3
Use[4.106]	**Level of Assessment**[4.107]	**Assessment Criteria**
Apartment Building	Code Assessable If - (1) In sub-area MA1 - at Toondah Harbour, Cleveland; (2) The use is undertaken as part of a mixed use development Otherwise - Impact Assessable	■ Marine Activity Zone Code ■ Apartment Building Code ■ Access and Parking Code ■ Development Near Underground Infrastructure Code ■ Erosion Prevention and Sediment Control Code ■ Excavation and Fill Code ■ Infrastructure Works Code ■ Landscape Code ■ Stormwater Management Code
Caretakers Dwelling	Code Assessable	■ Marine Activity Zone Code ■ Caretakers Dwelling Code
Commercial Office	Self-Assessable If - (1) In sub-area MA1; (2) Complying with the assessment criteria being the acceptable solutions listed in column 3 Code Assessable If - (1) Not self-assessable; (2) In sub-area - (a) MA1; or (b) MA3 Otherwise - Impact Assessable	■ Acceptable Solutions in section 8.2.4 of the Centre Activity Code ■ Marine Activity Zone Code ■ Access and Parking Code ■ Development Near Underground Infrastructure Code ■ Erosion Prevention and Sediment Control Code ■ Excavation and Fill Code ■ Infrastructure Works Code ■ Landscape Code ■ Stormwater Management Code
Community Facility	Code Assessable If - (1) In sub-area - (a) MA1; or (b) MA3 Otherwise - Impact Assessable	■ Marine Activity Zone Code ■ Access and Parking Code ■ Development Near Underground Infrastructure Code ■ Erosion Prevention and Sediment Control Code ■ Excavation and Fill Code ■ Infrastructure Works Code ■ Landscape Code ■ Stormwater Management Code

[4.106] See Part 9 - Schedule 3 - Dictionary, Division 1 - Uses.
[4.107] See Part 9 - Schedule 3 - Dictionary, Division 2 - Administrative Terms for a definition of level of assessment.

Marine Activity Zone - Table of Assessment for Material Change of Use of Premises

column 1	column 2	column 3
Use[4.106]	**Level of Assessment**[4.107]	**Assessment Criteria**
Emergency Service	Code Assessable	■ Marine Activity Zone Code ■ Access and Parking Code ■ Development Near Underground Infrastructure Code ■ Erosion Prevention and Sediment Control Code ■ Excavation and Fill Code ■ Infrastructure Works Code ■ Landscape Code ■ Stormwater Management Code
General Industry	Code Assessable If - (2) In sub-area - (a) MA1; or (b) MA2; (3) Associated with boat building Otherwise - Impact Assessable	■ Marine Activity Zone Code ■ Access and Parking Code ■ Development Near Underground Infrastructure Code ■ Erosion Prevention and Sediment Control Code ■ Excavation and Fill Code ■ Infrastructure Works Code ■ Landscape Code ■ Stormwater Management Code
Heavy Industry	Code Assessable If - (1) In sub-area MA2; (2) Associated with boat building Otherwise - Impact Assessable	■ Marine Activity Zone Code ■ Access and Parking Code ■ Development Near Underground Infrastructure Code ■ Erosion Prevention and Sediment Control Code ■ Excavation and Fill Code ■ Infrastructure Works Code ■ Landscape Code ■ Stormwater Management Code
Home Business	Self-Assessable If - (1) Within a dwelling unit approved under this planning scheme; (2) Complying with the assessment criteria being the acceptable solutions listed in column 3 Code Assessable If - (1) Not self-assessable; (2) Within a dwelling unit approved under this planning scheme Otherwise - Impact Assessable	■ Acceptable Solutions in section 6.15.4 of the Home Business Code ■ Marine Activity Zone Code ■ Home Business Code ■ Access and Parking Code

Marine Activity Zone - Table of Assessment for Material Change of Use of Premises

column 1	column 2	column 3
Use[4.106]	**Level of Assessment**[4.107]	**Assessment Criteria**
Marine Services	Code Assessable	■ Marine Activity Zone Code ■ Access and Parking Code ■ Development Near Underground Infrastructure Code ■ Erosion Prevention and Sediment Control Code ■ Excavation and Fill Code ■ Infrastructure Works Code ■ Landscape Code ■ Stormwater Management Code
Minor Utility	Exempt	
Park	Self-Assessable If - (1) Being undertaken by the local government; (2) On land in the ownership or control of the local government; (3) Complying with the assessment criteria being the acceptable solutions listed in column 3 Code Assessable If not self-assessable	■ Acceptable Solutions in section 6.20.4 of the Park Code ■ Acceptable Solutions in section 8.5.4 of the Development Near Underground Infrastructure Code ■ Marine Activity Zone Code ■ Park Code ■ Access and Parking Code ■ Development Near Underground Infrastructure Code ■ Infrastructure Works Code ■ Landscape Code ■ Stormwater Management Code
Passenger Terminal	Code Assessable If - (1) In sub-area - (a) MA1; or (b) MA3 Otherwise - Impact Assessable	■ Marine Activity Zone Code ■ Access and Parking Code ■ Development Near Underground Infrastructure Code ■ Erosion Prevention and Sediment Control Code ■ Excavation and Fill Code ■ Infrastructure Works Code ■ Landscape Code ■ Stormwater Management Code
Refreshment Establishment	Self-Assessable If - (1) In sub-area MA1; (2) Complying with the assessment criteria being the acceptable solutions listed in column 3	■ Acceptable Solutions in section 8.2.4 of the Centre Activity Code

Marine Activity Zone - Table of Assessment for Material Change of Use of Premises

column 1	column 2	column 3
Use[4.106]	**Level of Assessment**[4.107]	**Assessment Criteria**
	Code Assessable If - (1) Not self-assessable; (2) In sub-area MA1; (3) 100m^2 or less of gross floor area Otherwise - Impact Assessable	■ Marine Activity Zone Code ■ Access and Parking Code ■ Development Near Underground Infrastructure Code ■ Erosion Prevention and Sediment Control Code ■ Excavation and Fill Code ■ Infrastructure Works Code ■ Landscape Code ■ Stormwater Management Code
Road	Exempt	
Shop	Self-Assessable If - (1) In sub-area MA1; (2) Complying with the assessment criteria being the acceptable solutions listed in column 3 Code Assessable If - (1) Not self-assessable; (2) In sub-area MA1; (3) 200m^2 or less of gross floor area Otherwise - Impact Assessable	■ Acceptable Solutions in section 8.2.4 of the Centre Activity Code ■ Marine Activity Zone Code ■ Access and Parking Code ■ Development Near Underground Infrastructure Code ■ Erosion Prevention and Sediment Control Code ■ Excavation and Fill Code ■ Infrastructure Works Code ■ Landscape Code ■ Stormwater Management Code
Telecommunications Facility	Self-Assessable If complying with the assessment criteria being the acceptable solutions listed in column 3 Code Assessable If not self-assessable	■ Acceptable Solutions in section 6.26.4 of the Telecommunications Facility Code ■ Acceptable Solutions in section 8.5.4 of the Development Near Underground Infrastructure Code ■ Acceptable Solutions in section 8.6.4 of the Erosion Prevention and Sediment Control Code ■ Acceptable Solutions in section 7.6.4 of the Excavation and Fill Code ■ Marine Activity Zone Code ■ Telecommunications Facility Code ■ Access and Parking Code ■ Development Near Underground Infrastructure Code ■ Erosion Prevention and Sediment Control Code ■ Excavation and Fill Code ■ Infrastructure Works Code

Marine Activity Zone - Table of Assessment for Material Change of Use of Premises

column 1	column 2	column 3
Use[4.106]	**Level of Assessment**[4.107]	**Assessment Criteria**
Temporary Use	Self-Assessable If complying with the assessment criteria being the acceptable solutions listed in column 3 Code Assessable If not self-assessable	■ Acceptable Solutions in section 6.27.4 of the Temporary Use Code ■ Marine Activity Zone Code ■ Temporary Use Code
Tourist Accommodation	Code Assessable If - (1) If in sub-area MA1 - at Toondah Harbour, Cleveland; (2) The use is undertaken as part of a mixed use development Otherwise - Impact Assessable	■ Marine Activity Zone Code ■ Tourist Accommodation Code ■ Access and Parking Code ■ Development Near Underground Infrastructure Code ■ Erosion Prevention and Sediment Control Code ■ Excavation and Fill Code ■ Infrastructure Works Code ■ Landscape Code ■ Stormwater Management Code
Utility Installation	Code Assessable	■ Marine Activity Zone Code ■ Access and Parking Code ■ Development Near Underground Infrastructure Code ■ Erosion Prevention and Sediment Control Code ■ Excavation and Fill Code ■ Landscape Code ■ Stormwater Management Code
Vehicle Depot	Code Assessable If - (1) In sub-area - (a) MA1; or (b) MA2 Otherwise - Impact Assessable	■ Marine Activity Zone Code ■ Access and Parking Code ■ Development Near Underground Infrastructure Code ■ Erosion Prevention and Sediment Control Code ■ Excavation and Fill Code ■ Infrastructure Works Code ■ Landscape Code ■ Stormwater Management Code
Vehicle Parking Station	Code Assessable If - (1) In sub-area - (a) MA1; or (b) MA3; (2) The use is undertaken as part of a mixed use development Otherwise - Impact Assessable	■ Marine Activity Zone Code ■ Access and Parking Code ■ Development Near Underground Infrastructure Code ■ Erosion Prevention and Sediment Control Code ■ Excavation and Fill Code ■ Infrastructure Works Code ■ Landscape Code ■ Stormwater Management Code

Marine Activity Zone - Table of Assessment for Material Change of Use of Premises

column 1	column 2	column 3
Use[4.106]	Level of Assessment[4.107]	Assessment Criteria
Defined uses not listed in column 1	Impact Assessable	
Defined uses listed in column 1 that do not comply with the level of assessment qualifications in column 2	Impact Assessable	
Uses not defined in Part 9 - Schedule 3 - Dictionary, Division 1 - Uses	Impact Assessable	

4.13.5 Marine Activity Zone - Table of Assessment for Other Development not associated with a Material Change of Use of Premises

Marine Activity Zone - Table of Assessment for Other Development

column 1	column 2	column 3
Other Development	**Level of Assessment**[4.108]	**Assessment Criteria**
Reconfiguration for -		
Creating lots by subdividing another lot by Standard Format Plan[4.109]	Code Assessable If - (1) In sub-area - (a) MA1; or (b) MA3 Otherwise - Impact Assessable	■ Marine Activity Zone Code ■ Reconfiguration Code ■ Development Near Underground Infrastructure Code ■ Excavation and Fill Code ■ Infrastructure Works Code ■ Stormwater Management Code
Creating lots by subdividing another lot by - ■ Building Format Plan; or ■ Volumetric Format Plan	Code Assessable	■ Marine Activity Zone Code ■ Reconfiguration Code
■ Rearranging the boundaries of a lot by registering a plan of subdivision; or ■ Dividing land into parts by Agreement; or ■ Creating an easement giving access to a lot from a constructed road	Code Assessable	■ Reconfiguration Code
Building Work for -		
Communications Structures	Exempt If minor building work[4.110] Self-Assessable If - (1) Not exempt; (2) Complying with the assessment criteria being the acceptable solutions listed in column 3 Code Assessable If not self-assessable	■ Acceptable Solutions in section 7.2.4 of the Communications Structures Code ■ Communications Structures Code

[4.108] See Part 9 - Schedule 3 - Dictionary, Division 2 - Administrative Terms for a definition of level of assessment.
[4.109] Whether or not having a Community Management Statement.
[4.110] See Part 9 - Schedule 3 - Dictionary, Division 2 - Administrative Terms for a definition of minor building work.

Marine Activity Zone - Table of Assessment for Other Development

column 1	column 2	column 3
Other Development	**Level of Assessment[4.108]**	**Assessment Criteria**
Domestic Additions	Exempt If - (1) Minor building work[4.110] (2) In sub-area MA2 Code Assessable If not exempt	■ Marine Activity Zone Code ■ Domestic Additions Code ■ Development Near Underground Infrastructure Code ■ Erosion Protection and Sediment Control Code ■ Excavation and Fill Code ■ Stormwater Management Code
Domestic Outbuilding	Exempt If - (1) Minor building work[4.110] (2) In sub-area MA2 Code Assessable If not exempt	■ Marine Activity Zone Code ■ Domestic Outbuilding Code ■ Development Near Underground Infrastructure Code ■ Erosion Prevention and Sediment Control Code ■ Excavation and Fill Code ■ Stormwater Management Code
On-site raising or relocation of an existing dwelling unit	Code Assessable	■ Marine Activity Zone Code ■ On-Site Raising or Relocation Code ■ Development Near Underground Infrastructure Code ■ Erosion Prevention and Sediment Control Code ■ Excavation and Fill Code ■ Stormwater Management Code
Private Swimming Pool	Code Assessable	■ Private Swimming Pool Code ■ Development Near Underground Infrastructure Code
Private Tennis Court	Code Assessable	■ Private Tennis Court Code ■ Erosion Prevention and Sediment Control Code ■ Excavation and Fill Code ■ Landscape Code

Marine Activity Zone - Table of Assessment for Other Development

column 1	column 2	column 3
Other Development	**Level of Assessment**[4.108]	**Assessment Criteria**
Operational Work for -		
Constructing a Domestic Driveway Crossover	Self-Assessable If complying with the assessment criteria being the acceptable solutions listed in column 3 Code Assessable If not self-assessable	■ Acceptable Solutions in section 7.4.4 of the Domestic Driveway Crossover Code ■ Domestic Driveway Crossover Code
Excavation and Fill	Exempt If - (1) Disturbing less than 50m^3 of soil; (2) A height/depth not exceeding 300mm measured from ground level Self-Assessable If - (1) Not exempt; (2) Complying with the assessment criteria being the acceptable solutions listed in column 3 Code Assessable If not self-assessable	■ Acceptable Solutions in section 8.6.4 of the Erosion Prevention and Sediment Control Code ■ Acceptable Solutions A1.(1)(b),(c),(d) in section 7.6.4 of the Excavation and Fill Code ■ Marine Activity Zone Code ■ Erosion Prevention and Sediment Control Code ■ Excavation and Fill Code
Placing an Advertising Device on Premises	Self-Assessable If complying with the assessment criteria being the acceptable solutions listed in column 3 Code Assessable If not self-assessable	■ Acceptable Solutions in section 7.1.4 of the Advertising Devices Code ■ Marine Activity Zone Code ■ Advertising Devices Code
Operational Work for Reconfiguring a Lot (by Standard Format Plan)	Code Assessable	■ Reconfiguration Code ■ Development Near Underground Infrastructure ■ Erosion Prevention and Sediment Control Code ■ Excavation and Fill Code ■ Infrastructure Works Code ■ Landscape Code ■ Stormwater Management Code

Marine Activity Zone - Table of Assessment for Other Development

column 1	column 2	column 3
Other Development	**Level of Assessment**[4.108]	**Assessment Criteria**
Private Waterfront Structure	Code Assessable	■ Marine Activity Zone Code ■ Private Waterfront Structure Code ■ Development near Underground Infrastructure Code ■ Erosion Prevention and Sediment Control Code ■ Excavation and Fill Code
All other development not listed in column 1	Exempt	

4.13.6 Compliance with Marine Activity Zone Code

(1) Development that is consistent with the specific outcomes in section 4.13.8 complies with the Marine Activity Zone Code.

Note -

The following planning scheme policies will assist in achieving specific outcomes within the Marine Activity Zone Code -

- Planning Scheme Policy 5 - Environmental Emissions;
- Planning Scheme Policy 9 - Infrastructure Works.

4.13.7 Overall Outcomes for Marine Activity Zone Code

(1) The overall outcomes are the purpose of the Marine Activity Zone Code.

(2) The overall outcomes sought for the Marine Activity Zone Code are described by six key characteristics[4.111] -

(a) Uses and Other Development;
(b) Built Form and Density;
(c) Amenity;
(d) Pollution Prevention;
(e) Environment;
(f) Infrastructure.

Each of these are detailed below -

(a) Uses and Other Development

(i) Provide for a specified range of uses that -

a. within sub-area MA1 -
- incorporate the primary vehicular and passenger terminals and associated facilities servicing North Stradbroke Island (Minjerribah) and the Southern Moreton Bay Islands;
- contain marine transport, marine-related commercial, research, storage, tourist, retail, community and government based activities;
- at Toondah Harbour, Cleveland, tourist and residential accommodation is a component of mixed-use development and above ground level;
- provide for a limited range of marine service activities in the Weinam Creek area;

b. within sub-area MA2 include manufacture, repair, servicing and display of boats;

c. within sub-area MA3 -
- incorporate the primary marine-based passenger, vehicular and freight terminal and associated facilities servicing North Stradbroke Island;
- contain marine transport, marine-related commercial, commercial sand loading facilities and storage activities compatible with the passenger terminal function.

(ii) Reconfiguration involving the creation of additional lots does not occur in sub-area MA2, to maintain the usability and integrity of the land for existing and future marine activity purposes.

(iii) Other development does not compromise the uses and associated activities expected in the zone.

(b) Built Form and Density -

(i) The layout of uses and other development within the lot or premises -

a. utilises land efficiently;

[4.111] In combination, the overall outcomes in section 4.13.7 (2)(a)-(f) define the character of the Marine Activity Zone.

b. provides for vehicle and pedestrian access, parking, manouevring and loading/unloading areas and landscaping;
c. contributes to security of property and safety of people;
d. minimises noise generation and other negative impacts.

(ii) The scale of uses and buildings contribute to a built form that respects the foreshore location by -
a. adopting building heights, width, depth and bulk that minimise visual impacts;
b. ensuring in sub-areas MA1 and MA3 building design incorporates -
- building materials that complement the water front locality;
- articulated roof form;
- high quality materials and architectural treatments that reinforce the area's strategic position as a gateway between the mainland and islands;

c. in sub-area MA2 - buildings are sited and screened from adjoining properties and are compatible with a high quality marine industry design.

(c) Amenity

(i) Uses and other development achieve a high standard of amenity by -
a. protecting and enhancing places of cultural significance or scenic value;
b. maintaining the character and amenity of the foreshore areas of Moreton Bay;
c. avoiding adverse impacts on the amenity of surrounding uses;
d. minimising visual clutter associated with fencing and signage along all street frontages.

(d) Pollution Prevention

(i) Uses and other development operate in a manner that -
a. is within acceptable environmental standards;
b. mitigates adverse impacts associated with light, noise, air, and other emissions;
c. utilises best practice to minimise adverse impacts associated with stormwater run-off and other potentially water or soil contaminating substances.

(e) Environment

(i) The scale and operational attributes of uses and other development minimise adverse impacts on the environment by -
a. responding to topographical features;
b. limiting the need for excavation and fill;
c. protecting the site from erosion;
d. retaining native plants;
e. maximising the use of plant species that are native to the area;
f. incorporating best practice stormwater management and enhancing water quality;
g. ensuring the marine environment is not subject to unreasonable harm or disturbance by activities conducted within this zone.

(ii) In sub-area MA2 - uses and other development minimise adverse impacts by -
a. protecting the ecology of the adjoining coastal, tidal and sub-tidal areas, fish habitat reserve, and areas listed under the Ramsar Convention;
b. protecting the water quality of Eprapah Creek or Moreton Bay;
c. not requiring the dredging of the Eprapah Creek for all tide vessel access or the creation of further mooring basins;
d. minimising the removal of coastal vegetation.

(f) Infrastructure

(i) Uses and other development -
a. make efficient use of existing infrastructure;
b. provide for the upgrading and extension of infrastructure in an orderly and cost effective manner;
c. do not result in unacceptable risk to community infrastructure.

(ii) Uses and other development are serviced by infrastructure including -

a. reticulated water;
b. reticulated sewerage; or
c. in sub-area MA2 - waste water is treated and disposed on-site subject to the location, design and performance or the treatment system;
d. stormwater drainage;
e. constructed road access;
f. energy;
g. telecommunications;
h. waste management and recycling collection.

(iii) Uses manage the generation, storage, disposal, recycling and reuse of waste.

(iv) Uses and other development reinforce an attractive, integrated, legible efficient and safe movement network that -
a. in sub-area MA1 and MA3 -
- incorporate a full range of transport modes including public transport, water and land based, passenger and freight vehicles, walking and cycling);
- minimise conflicts between passengers, pedestrians, cyclists, freight and private vehicles using the water based transport systems;
- provide pedestrian pathways that maximise connectivity, permeability and ease of mobility between public transport modes (land and water based);

b. in sub-area MA2 - minimise conflicts between traffic generated by the use and local traffic.

Note -

Summary of Marine Activity Zone Sub-area	
Sub-area	**Description**
Sub-area MA1	Toondah Harbour, Cleveland and Weinam Creek, Redland Bay
Sub-area MA2	Beveridge Road
Sub-area MA3	Dunwich on North Stradbroke Island

4.13.8 Specific Outcomes and Probable Solutions applicable to Assessable Development

Assessable Development			
Specific Outcomes		**Probable Solutions**	
	Uses and Other Development -		
S1.1	Uses and other development identified as inconsistent in Table 1 are not established or undertaken in the zone.	**P1.1**	No probable solution identified.
S1.2	(1) In sub-area MA1 - (a) a range of commercial, retail, tourism based, community and education uses may be established where such uses - (i) do not impact on the primary marine orientated activities of the sub-area; (ii) result in positive economic and social benefits; (b) tourist and residential uses are within a mixed used development and above ground level; (c) general industry uses associated with the building of boats may be established on the southern side of Weinam Creek.	**P1.2**	(1) No probable solution identified.
S1.3	(1) In sub-area MA2 - uses are restricted to - (a) general and heavy industry uses associated with the building of boats; (b) dwelling houses on existing lots; (c) home businesses or similar uses which are compatible with uses expected in the sub-area.	**P1.3**	(1) No probable solution identified.
S1.4	(1) In sub-area MA3 - uses (a) are compatible with the primary marine orientated facilities and functions of the sub-area, (b) provide a range of marine-related transport, commercial, sand loading and storage facilities and services in conjunction with the passenger terminal functions.	**P1.4**	(1) No probable solution identified.
S1.5	Other development does not hinder the ongoing operation and future economic development of marine uses within the zone.	**P1.5**	No probable solution identified.

Assessable Development			
Specific Outcomes		**Probable Solutions**	
S1.6	Reconfiguration of existing lots within sub-areas MA1 and sub-area MA3 improves the function of the area and minimises off-site impacts.	**P1.6**	No probable solution identified.
	Built Form and Density -		
S2.1	(1) Site layout - (a) uses the site efficiently and allocates sufficient areas for all activities related to the use; (b) locates employee parking, manoeuvring and loading/unloading areas to - (i) the side or rear of the site; (ii) in sub-area MA1 and MA3 - away from public transport facilities; (c) locates customer and passenger parking - (i) at visible locations that have easy and direct pedestrian access to building entries and (ii) with easy and direct pedestrian access to public transport facilities where in sub-areas MA1 and MA3; (d) provides opportunities to consolidate and co-ordinate on-site parking and service areas; (e) is designed to maximise personal safety for employees, customers and passengers; (f) in sub-areas MA1 and MA3 - minimises conflicts between foot passengers and vehicles; (g) ensures uses that have a common boundary with a sensitive receiving environment - (i) do not locate openings walls facing the common boundary; (ii) locate potentially noise emitting equipment, machinery, or outdoor work areas as far as practical from the common boundary.	**P2.1**	(1) No probable solution identified. **Note -** Refer to Part 8 - Division 1 - Access and Parking for requirements related to vehicle access and parking outcomes
S2.2	(1) Setbacks - (a) allow for the safe and efficient use of the site; (b) allow for planted landscaping along street frontages; (c) contribute to the built form and provide an attractive	**P2.2**	(1) No probable solution identified.

Assessable Development			
Specific Outcomes		**Probable Solutions**	
	streetscape; (d) enable the effective location of stormwater overland flow paths and utility infrastructure; (e) minimise visual impacts on Moreton Bay, Eprapah Creek and Weinam Creek; (f) are increased where required to provide - (i) overland flow paths associated with stormwater management; (ii) other infrastructure; (iii) car parking.		
S2.3	(1) Building height respects the foreshore location.	**P2.3**	(1) Building height is no greater than - (a) 11 metres; or (b) 8.5 metres at any part of the building where having a common boundary with a sensitive receiving environment; or (c) in sub-area MA1 at Toondah Harbour, Cleveland - 14 metres where a mixed use development including marine related activities and tourist or residential accommodation.
S2.4	(1) Building design incorporates architectural elements that - (a) integrate with landscape planting and prevailing coastal landscape features; (b) minimise any adverse overshadowing and reflective impacts; (c) incorporate articulated walls with horizontal and vertical variations, shadow detail and colour, to reduce the impact of blank walls.	**P2.4**	(1) No probable solution identified.
S2.5	(1) Building design in sub-areas MA1 and MA3 - recognises the importance of the highly prominent foreshore location by - (a) providing interesting, functional and attractive facades that contribute to the streetscape and coastal setting and customer and passenger experience; (b) providing physical connections and linkages between buildings and public transport facilities, and between car parking areas and public transport facilities; (c) incorporating open frame	**P2.5**	(1) No probable solution identified.

Assessable Development			
Specific Outcomes		**Probable Solutions**	
	architecture; (d) incorporating variation to the external appearance and shape of the built form through - (i) surface decoration and detailing; (ii) wall recesses and protections; (iii) variation of wall finishes and fenestration; (iv) attractive roofscapes.		
S2.6	Building design and materials in sub-area MA2 - are compatible with a high quality marine industry design.	**P2.6**	No probable solution identified.
S2.7	(1) Site coverage of buildings balances built and unbuilt areas to - (a) assist in retaining existing native plants; (b) provide space for on-site landscaping and planting; (c) provide areas for access, parking, manoeuvring, outdoor work and service functions; (d) facilitate stormwater management.	**P2.7**	(1) Uses and other development are designed so that - (a) building site coverage is a maximum of - (i) in sub-areas MA1 and MA3 - 50 percent of the site area; or (ii) in sub-area MA2 - 30 percent of the site area; (b) total development area including access, parking, service and outdoor work areas is a maximum of - (i) in sub-areas MA1 and MA3 - 80 percent of the site area; or (ii) in sub-area MA2 - 50 percent of the site area; (c) planted landscaping accommodates at least - (i) in sub-areas MA1 and MA3 - 20 percent of the site area; or (ii) in sub-area MA2 - 50 percent of the site area.
	Amenity -		
S3.1	(1) High quality landscaping including planting and other components of the landscape are provided that - (a) have regard to the proximity and location of the use to the street, Moreton Bay, Weinam Creek and Eprapah Creek; (b) are of a suitable scale relative to the road reserve width and the building size; (c) have regard to the nature and scale of the use and the need for any intensive screen planting where adjoining a sensitive environment;	**P3.1**	(1) No probable solution identified. **Note -** Refer to Part 8 - ■ Division 1 - Access and Parking Code for car parking landscape assessment criteria; ■ Division 8 - Landscape Code for general landscaping assessment criteria.

Assessable Development			
Specific Outcomes		**Probable Solutions**	
	(d) are used to break up the visual bulk of buildings; (e) are sensitive to site attributes and the surrounding natural environment; (f) create visual relief and shade, particularly within car parking areas; (g) are used to screen outdoor storage, work and service or other obtrusive areas from public view; (h) are used to define building entrances and pedestrian paths.		
S3.2	(1) Fences - (a) are finished and maintained to be visually attractive and contribute to or blend with planted landscaping and building materials; (b) are designed and detailed to provide visual interest to the streetscape, Moreton Bay, Weinam Creek and Eprapah Creek; (c) are not erected on a boundary directly adjoining Moreton Bay, Eprapah Creek or Weinam Creek; (d) provide an effective visual and acoustic screen to adjoining sensitive environments; (e) assist in highlighting entrances and pedestrian paths; (f) maximise safety and security.	**P3.2**	(1) No probable solution identified.
S3.3	(1) Signage clutter is minimised, especially to the external streetscape; (2) Communal signage is provided, preferably in the form of an architectural and landscaped feature.	**P3.3**	(1) No probable solution identified; (2) No probable solution identified. **Note -** Refer to Part 7 - Division 1 - Advertising Devices Code for signage assessment criteria.
S3.4	Development does not adversely impact on cultural heritage values.	**P3.4**	No probable solution identified.
	<u>Pollution Prevention -</u>		
S4.1	(1) Noise and vibration emissions generated by the operational activities of the use are minimised by - (a) acoustically housing noise emitting plant and equipment; (b) locating, away from sensitive environments -	**P4.1**	(1) Noise generated by the use - (a) complies with - (i) Table 2 - Noise levels at the boundary of the Marine Activity Zone; (ii) Table 3 - Noise levels at the boundary of the nearest residential zone;

Assessable Development			
Specific Outcomes		**Probable Solutions**	
	(i) major opening in buildings; (ii) outdoor work areas.		or (iii) the requirements of any development approval issued under the *Environmental Protection Act 1994*; (b) for marine industries within sub-area MA2 - activities are minimised between 6pm and 7am Monday to Saturday, and all day Sunday by - (i) not carrying out any activities in outdoor work areas; (ii) limiting indoor activities to office and administrative tasks, and other activities that are not audible or visible from outside the building; (iii) not receiving any deliveries.
S4.2	(1) Uses and other development minimise emissions of dust and odour and the generation of airborne pollutants; (2) Dust impacts of vehicle movements and stockpiling of materials are eliminated or mitigated.	**P4.2**	(1) Emissions of dust or odour and the generation of airborne pollutants do not exceed the relevant guidelines set out in Schedule 1 of the *Environmental Protection (Air) Policy 1997*; (2) No probable solution identified. **Note -** Refer to Part 11 - Planning Scheme Policy 5 - Environmental Emissions for further information on noise and air quality impacts.
S4.3	(1) Artificial lighting does not result in unreasonable disturbance to any person or activity; (2) Glare and reflection from the sun are minimised through material and glazing choice.	**P4.3**	(1) The vertical illumination resulting from direct, reflected or other incidental light emanating from the site does not exceed 8 lux when measured at any point 1.5 metres outside the boundary at or above ground level; (2) No probable solution identified
S4.4	(1) Land contamination is mitigated by - (a) ensuring storage, use and spillage of potential contaminants does not result in the contamination of land; (b) incorporating waste storage and collection measures that protect against spillage of contaminated materials; (c) ensuring storage areas for potentially contaminating substances are roofed and	**P4.4**	(1) No probable solution identified.

Assessable Development			
Specific Outcomes		**Probable Solutions**	
	located on impermeable surfaces; (d) incorporating space for accidental spill areas to be bunded and the contaminant retained on-site in an impermeable area/system, before removal by an approved means.		
S4.5	(1) Emissions of contaminants including heat, radioactivity, electromagnetic radiation or the like do not cause adverse environmental impacts; (2) The use or other development does not involve radioactive or bio-hazardous - (a) materials; (b) processes.	**P4.5**	(1) No probable solution identified; (2) No probable solution identified.
S4.6	(1) Eliminate risk to people, property and the environment from hazards including, fire, explosion and chemical release.	**P4.6**	(1) The use is not defined in the *Dangerous Goods Safety Management Regulation 2001* as a - (a) Dangerous Goods Location or Large Dangerous Goods Location; (b) Major Hazardous Facility. **Note -** Refer to Schedule 1 and 2 of the *Dangerous Goods Safety Management Regulation 2001.*
	Environment -		
S5.1	(1) Protect the environment from impacts associated with the use or other development including - (a) stormwater run-off; (b) water quality; (c) erosion and sediment run-off; (d) weed infestation.	**P5.1**	(1) No probable solution identified.
S5.2	(1) Minimise the need for excavation and fill by uses and other development being located and designed to - (a) prevent the unnecessary removal of native plants; (b) protect overland stormwater flow paths; (c) reduce erosion and sediment run-off.	**P5.2**	(1) No probable solution identified. **Note -** Refer to Part 7 - Division 6 - Excavation and Fill for assessment criteria where the site requires earthworks.
S5.3	(1) Landscaping - (a) incorporates plant species native to the local area;	**P5.3**	(1) Landscaping - (a) maximises the use of native species listed in Part 9 -

Assessable Development			
Specific Outcomes		**Probable Solutions**	
	(b) maximises use of permeable surfaces to improve and reduce stormwater run-off; (c) is incorporated as a component of the stormwater management system.		(i) Schedule 10 - Vegetation Species List; (ii) Schedule 9 - Street Trees where within the road reserve; (iii) acts as a filter for stormwater run-off from car parking areas contaminated by hydrocarbons. **Note -** Refer to - ■ Part 8 - Division 8 - Landscape Code; ■ Division 9 - Stormwater Management Code
S5.4	(1) Uses and other development minimise adverse impacts by - (a) protecting the ecology of the adjoining coastal, tidal and sub-tidal areas, fish habitat reserves and areas listed under the Ramsar convention; (b) maintaining the water quality of Moreton Bay, Eprapah Creek and Weinam Creek; (c) not involving the removal of significant coastal vegetation.	**P5.4**	(1) No probable solution identified.
S5.5	(1) In sub-area MA2 - uses and other development minimise adverse impacts by - (a) not requiring the dredging of the Eprapah Creek mouth for all tide, all vessel access; (b) not involving the dredging of the Eprapah creek for the creation of further mooring basins; (c) requiring the provision of shared slipping facilities and shared access arrangements between landowners.	**P5.5**	(1) No probable solution identified.
	Infrastructure -		
S6.1	Uses and other development efficiently utilise existing infrastructure and do not inhibit future extension of the infrastructure.	**P6.1**	No probable solution identified.
S6.2	(1) All uses in the zone are serviced by infrastructure including - (a) reticulated water; (b) reticulated sewerage; or (c) in sub-area MA2 -where the site is not able to connect to a reticulated sewerage system,	**P6.2**	(1) No probable solution identified.

Assessable Development			
Specific Outcomes		**Probable Solutions**	
	wastewater - (i) is treated and disposed of on-site subject to site, soil and locational constraints; (ii) reduces the potential for - a. contaminating groundwater, surface water or wetland environments; b. risks to reticulated water supply and public health; (d) stormwater management systems that - (i) utilise natural overland drainage systems; (ii) incorporate measures to reduce stormwater quantity and improve stormwater quality; (e) constructed road access; (f) energy; (g) telecommunications; (h) waste and recycling facilities		
S6.3	(1) Stormwater management for the site - (a) enhances water quality at receiving waters; (b) protects waterways from potential contamination; (c) effectively provides for overland drainage flows due to large hard stand and roof areas associated with built forms in this zone.	**P6.3**	(1) Stormwater management for the site ensures that the quality of stormwater leaving the lot or premises achieves the standards detailed in Part 9 - Schedule 11 - Water Quality Objectives. **Note -** Refer to Part 8 - Division 9 - Stormwater Management Code for stormwater management assessment criteria.
S6.4	(1) Waste and recycling is managed to minimise impacts on the environment and nearby premises by - (a) locating waste and recycling storage areas to protect amenity and to provide safe manual handling of containers; (b) screening waste and recycling container storage areas from view; (c) providing for the cleansing of containers in a manner that does not cause adverse environmental impacts; (2) Uses and other development - (a) provide safe and efficient manoeuvring for waste collection vehicles; (b) ensure all bulk waste and recycling containers are	**P6.4**	(1) No probable solution identified. (2) No probable solution identified. (3) No probable solution identified. **Note -** Refer to Part 11 - Planning Scheme Policy 9 - Infrastructure Works – Chapter 16 – Waste Management for further information on waste and recycling container volume, storage, servicing, screening and cleansing. Refer to Part 8 - Division 1 - Access and Parking Code for waste collection vehicle servicing and manoeuvring assessment criteria.

Assessable Development			
Specific Outcomes		**Probable Solutions**	
	serviced off-street and not on roads with public access; (c) ensure sufficient vertical clearance for container servicing; (d) ensure unobstructed access to containers by collection vehicles; (3) Waste and recycling storage is designed and located to - (a) provide adequate container volume to contain the waste and recyclables; (b) provide recycle containers in an equivalent or greater volume to waste containers; (c) provide a dedicated waste and recycling container storage area that is convenient and safe to use; (d) ensure containers are located on impermeable surfaces.		
S6.5	(1) In sub-area MA1 and MA3 -vehicle access, parking facilities and service delivery areas are located and designed to - (a) minimise conflicts between pedestrians and cyclists with passenger vehicles, freight and public transport; (b) provide for integrated car parking areas; (c) ensure priority access and manoeuvring areas for buses and taxis servicing water-based passenger terminus facilities.	**P6.5**	(1) No probable solution identified. **Note -** Refer to Part 8 - ■ Division 1 - Access and Parking Code; ■ Division 7 - Infrastructure Works Code.
S6.6	In sub-area MA2 - the design and layout of vehicle access and service delivery areas are located to minimise impact on adjoining sensitive receiving environments and local roads.	**P6.6**	No probable solution identified.
S6.7	(1) Opportunities for cycling as a modal choice for employees and customers and are provided through - (a) clearly defined on-site cycle paths and facilities; (b) secure cycle storage areas, and facilities including showers and lockers for employees; (c) provision of cycle racks for customers; (d) within sub-area MA1 and MA3 - secured bicycle storage facilities are provided for use by water transport passengers.	**P6.7**	(1) Cycling facilities include - (a) on-site bicycle facilities that are designed and constructed in accordance with *AUSTROAD's Traffic Engineering Practice, Part 14 - Bicycles;* (b) the following for employees - (i) 1 bicycle space per 350m^2 of gross floor area; (ii) 1 personal locker per 2 bicycle parking spaces; (iii) 1 shower cubicle with change area per 5 bicycle spaces; or

Assessable Development			
Specific Outcomes		**Probable Solutions**	
			(iv) 1 shower cubicle with change area if less than 5 bicycle spaces are required.
S6.8	Community infrastructure is able to function effectively during and immediately after flood events.	**P6.8**	Community infrastructure is located at or above the recommended flood levels in Table 4 - Recommended Flood Levels for Community Infrastructure.

Table 1 - Inconsistent Uses and Other Development

Inconsistent Uses
Aged Persons and Special Needs Housing
Agriculture
Animal Keeping
Apartment Building - except in sub-area MA1 - where part of a mixed use development
Bed and Breakfast
Car Wash Facility
Cemetery
Child Care Centre
Commercial Office - in sub-area MA2
Community Facility - in sub-area MA2
Display and Sale activity
Display Dwelling - in sub-area MA2 and sub-area MA3
Drive Through Restaurant
Dual Occupancy
Dwelling House - in sub-area MA1and sub-area MA3
Education Facility - in sub-area MA2
Estate Sales Office - in sub-area MA2 and sub-area MA3
Extractive Industry
Forestry
Funeral Parlour
Garden Centre
General Industry - except in sub-area MA1; or sub-area MA2 - where associated with boat building
Health Care Centre
Heavy Industry - except in sub-area MA2 - where associated with boat building
High Impact Industry
Hospital
Hotel - except in sub-area MA1 at Toondah Harbour, Cleveland and where part of a mixed use development
Indoor Recreation Facility - in sub-area MA2 and sub-area MA3
Institution
Intensive Agriculture
Landscape Supply Depot
Mobile Home Park
Multiple Dwelling - except in sub-area MA1 and where part of a mixed use development
Night Club
Outdoor Dining - in sub-area MA2 and sub-area MA3
Outdoor Recreation Facility
Place of Worship
Produce Store
Refreshment Establishment - in sub-area MA2 and sub-area MA3
Relatives Apartment
Retail Warehouse
Roadside Stall
Rural Enterprise
Service Station
Shop - in sub-area MA2 and sub-area MA3
Small Lot House
Tourist Accommodation - except in sub-area MA1 and where part of a mixed use development
Tourist Park

Inconsistent Uses
Vehicle Depot - in sub-area MA3
Vehicle Parking Station - in sub-area MA2
Vehicle Repair Premises
Veterinary Surgery
Warehouse
Inconsistent Other Development
Creating lots by subdividing another lot by Standard Format Plan - in sub-area MA2

Table 2 - Noise levels at the boundary of the Marine Activity Zone

Period	Noise level at the boundary of the Marine Activity Zone[1]
7am - 10pm	Background noise level plus 10 dB(A)
10pm - 7am	Background noise level plus 8 dB(A)

Note[1] - Measured as the adjusted maximum sound pressure level $L_{Amax,adj,T}$ as defined in the *Noise Measurement Manual* (Environmental Protection Agency, 2000)

Table 3 - Noise levels at the boundary of the nearest residential zone

Period	Noise level at the boundary of the nearest residential zone[1]
7am - 10pm	Background noise level plus 5 dB(A)
10pm - 7am	Background noise level plus 3 dB(A)

Note[1] - Measured as the adjusted maximum sound pressure level $L_{Amax,adj,T}$. as defined in the *Noise Measurement Manual* (Environmental Protection Agency, 2000)

Table 4 - Recommended Flood Levels for Community Infrastructure

Type of Community Infrastructure	Recommended Flood Level AEP (ARI)
Emergency services, other than police facilities	0.2% (1 in 500 year ARI)
Emergency shelters	0.5% (1 in 200 year ARI)
Police facilities	0.5% (1 in 200 year ARI)
Hospitals and associated facilities	0.2% (1 in 500 year ARI)
Stores of valuable records or items of historic or cultural significance, such as galleries and libraries	0.5% (1 in 200 year ARI)
Power stations	0.2% (1 in 500 year ARI)
Major switch yards	0.2% (1 in 500 year ARI)
Substations	0.5% (1 in 200 year ARI)
Sewerage treatment plants	1% (1 in 100 year ARI)
Water treatment plants	0.5% (1 in 200 year ARI)
■ State-controlled roads ■ Works of an electricity entity not otherwise listed in this table ■ Railway lines, stations and associated facilities ■ Aviation facilities ■ Communication network facilities	No specific recommended flood level but development proponents should ensure that the infrastructure is optimally located and designed to achieve suitable levels of service, having regard to the processes and policies of the administering government agency.

Reference - *State Planning Policy Guideline 1/03: Mitigating the Adverse Impacts of Flood, Bushfire and Landslide.*

Division 14 - Medium Density Residential Zone

4.14.1 Introduction

(1) This division contains the provisions for the Medium Density Residential Zone. They are -

(a) The Medium Density Residential Zone Tables of Assessment, that incorporates -
- (i) Levels of assessment for development in the Medium Density Residential Zone (section 4.14.2);
- (ii) Assessment criteria for development in the Medium Density Residential Zone (section 4.14.3);
- (iii) Medium Density Residential Zone - Table of Assessment for Material Change of Use of Premises (section 4.14.4);
- (iv) Medium Density Residential Zone - Table of Assessment for Other Development not associated with a Material Change of Use of Premises (section 4.14.5).

(b) The Medium Density Residential Zone Code, that incorporates -
- (i) Compliance with the Medium Density Residential Zone Code (section 4.14.6);
- (ii) Overall Outcomes for the Medium Density Residential Zone Code (section 4.14.7);
- (iii) Specific Outcomes and Probable Solutions applicable to Assessable Development (section 4.14.8).

4.14.2 Levels of assessment for development in the Medium Density Residential Zone

(2) Sections 4.14.4 and 4.14.5 identify the level of assessment for development in the Medium Density Residential Zone, as follows -

(a) section 4.14.4 Medium Density Residential Zone - Table of Assessment for Making a Material Change of Use of Premises[4.112] -
- (i) column 1 identifies uses that are exempt, self-assessable or assessable;
- (ii) column 2 identifies the level of assessment for the uses listed in column 1;
- (iii) the use is impact assessable where -
  - a. it is defined in Schedule 3 - Dictionary, Division 1 - Uses and is not listed in column 1; or
  - b. it is listed in column 1 and does not comply with the level of assessment qualifications listed in column 2; or
  - c. it is not defined in Schedule 3 - Dictionary, Division 1 - Uses.

(b) section 4.14.5 Medium Density Residential Zone - Table of Assessment for Other Development not associated with a Material Change of Use of Premises -
- (i) column 1 identifies other development that is exempt, self-assessable or assessable;
- (ii) column 2 identifies the level of assessment for other development listed in column 1;
- (iii) where the other development is not listed in column 1 it is exempt.

(3) Overlays may alter the level of assessment identified in (1)(a) and (b)[4.113].

[4.112] Works associated with an application for a material change of use of premises may be assessed together with the material change of use.

[4.113] Refer to Part 5 - Overlays to determine the level of assessment for the use or other development where an Overlay affects the lot and Part 1, section 1.2.5(10)(f) that explains how the highest level of assessment applies.

4.14.3 Assessment criteria for development in the Medium Density Residential Zone

(4) Development in the Medium Density Residential Zone is assessed against the assessment criteria listed in column 3 of sections 4.14.4 and 4.14.5, as follows -

(a) acceptable solutions of applicable codes for self-assessable development; or

(b) applicable codes for code assessable development.

(5) Self-assessable development that does not comply with all the acceptable solutions of the applicable codes is assessable development. Non compliance with only the acceptable solutions for self-assessable development in relation to setbacks and site cover under the QDC or nominated "Alternative Provisions" or Building Assessment Provisions will not elevate the level of assessment of a proposal from self assessable development to assessable development under the Redlands Planning Scheme. In these instances, the local government will undertake the functions of a referral agency with Concurrence Agency jurisdiction under IPA to assess and determine these matters.

(6) Impact assessable development will be assessed against all relevant provisions of the Redlands Planning Scheme.

Note -

- The level of assessment indicated within section 4.14.4 - Medium Density Residential Zone - Table of Assessment for Material Change of Use of Premises may be affected by Division 2 of the Regulatory Provisions of the *SEQ Regional Plan 2005-2026.*
- The level of assessment for reconfiguration as indicated within section 4.14.5 - Medium Density Residential Zone - Table of Assessment for Other Development not associated with a Material Change of Use of Premises, where within the Regional Landscape and Rural Production Area or Investigation Area of the *SEQ Regional Plan 2005-2026* -
  - Complies with Division 3 of the Regulatory Provisions;
  - Has a minimum lot size of 100 hectares, unless the subdivision meets an exclusion documented in Division 3.

Note -

Summary of Medium Density Residential Zone sub-areas	
Sub-area	**Description**
Sub-area MDR1	Multiple locations
Sub-area MDR2	Kingston Avenue at Alexandra Hills
Sub-area MDR3	Salisbury Street at Redland Bay

4.14.4 Medium Density Residential Zone - Table of Assessment for Material Change of Use of Premises

Medium Density Residential Zone -
Table of Assessment for Material Change of Use of Premises

column 1	column 2	column 3
Use[4.114]	**Level of Assessment**[4.115]	**Assessment Criteria**
Aged Persons and Special Needs Housing	Code Assessable If - (1) In sub-area - (a) MDR1; or (b) MDR3; (2) The building height does not exceed that detailed in Table 2 - Maximum Overall Building Height Otherwise - Impact Assessable	■ Medium Density Residential Zone Code ■ Aged Persons and Special Needs Housing Code ■ Access and Parking Code ■ Development Near Underground Infrastructure Code ■ Erosion Prevention and Sediment Control Code ■ Excavation and Fill Code ■ Infrastructure Works Code ■ Landscape Code ■ Stormwater Management Code
Apartment Building	Code Assessable If - (1) In sub-area - (a) MDR1; or (b) MDR3; (2) The building height does not exceed that detailed in Table 2 - Maximum Overall Building Height Otherwise - Impact Assessable	■ Medium Density Residential Zone Code ■ Apartment Building Code ■ Access and Parking Code ■ Development Near Underground Infrastructure Code ■ Erosion Prevention and Sediment Control Code ■ Excavation and Fill Code ■ Infrastructure Works Code ■ Landscape Code ■ Stormwater Management Code
Bed and Breakfast	Self-Assessable If - (1) Not in sub-area - (a) MDR1; or (b) MRD2; or (c) MDR3; (2) Complying with the assessment criteria being the acceptable solutions listed in column 3 Code Assessable If - (1) Not self-assessable; (2) Not in sub-area - (a) MDR1; or (b) MRD2; or (c) MDR3 Otherwise - Impact Assessable	■ Acceptable Solutions in section 6.5.4 of the Bed and Breakfast Code ■ Medium Density Residential Zone Code ■ Bed and Breakfast Code ■ Infrastructure Works Code ■ Landscape Code

[4.114] See Schedule 3 - Dictionary, Division 1 - Uses.
[4.115] See Schedule 3 - Dictionary, Division 2 - Administrative Terms for a definition of level of assessment.

Medium Density Residential Zone - Table of Assessment for Material Change of Use of Premises

column 1	column 2	column 3
Use[4.114]	**Level of Assessment**[4.115]	**Assessment Criteria**
Caretakers Dwelling	Code Assessable	■ Medium Density Residential Zone Code ■ Caretakers Dwelling Code
Commercial Office	Self-Assessable If - (1) In sub-area - (a) MDR1; or (b) MDR3; (2) Complying with the assessment criteria being the acceptable solutions listed in column 3 Code Assessable If - (1) In sub-area - (a) MDR1; or (b) MDR3; (2) The use is undertaken as part of a mixed use development; (3) Having 400m^2 or less gross floor area Otherwise - Impact Assessable	■ Acceptable Solutions in section 8.2.4 of the Centre Activity Code ■ Medium Density Residential Zone Code ■ Access and Parking Code ■ Development Near Underground Infrastructure Code ■ Erosion Prevention and Sediment Control Code ■ Excavation and Fill Code ■ Infrastructure Works Code ■ Landscape Code ■ Stormwater Management Code
Display Dwelling	Code Assessable	■ Medium Density Residential Zone Code ■ Display Dwelling Code
Dual Occupancy	Code Assessable If - (1) Not in sub-area - (a) MDR1; or (b) MDR2; or (c) MDR3; (2) The use is located on a premises that - (a) is 700m^2 or more in area; (b) has a frontage of 20 metres or more; (3) The building height is - (a) 8.5 metres or less above ground level; (b) 2 storey or less; (4) The use does not involve built to boundary walls that - (a) are greater than 7 metres in total length;	■ Medium Density Residential Zone Code ■ Dual Occupancy Code ■ Development Near Underground Infrastructure Code ■ Domestic Driveway Crossover Code ■ Erosion Prevention and Sediment Control Code ■ Excavation and Fill Code ■ Infrastructure Works Code ■ Landscape Code ■ Stormwater Management Code

Medium Density Residential Zone - Table of Assessment for Material Change of Use of Premises

column 1	column 2	column 3
Use[4.114]	**Level of Assessment**[4.115]	**Assessment Criteria**
	(b) are greater than 3 metres in height; (c) have windows or doors Otherwise - Impact Assessable	
Dwelling House	Self-Assessable If - (1) Not in sub-area - (a) MDR1; or (b) MDR2; or (c) MDR3; (2) Complying with the assessment criteria being the acceptable solutions listed in column 3 **Note -** Non-compliance with the acceptable solutions for self assessable development in relation to setbacks, site cover and built to boundary walls, or nominated "Alternative Provisions" or Building Assessment Provisions identified in the Dwelling House Code will not elevate the level of assessment of a proposal from self assessable development to assessable development under the Redlands Planning Scheme. Refer to section 6.11.2 of the Dwelling House Code. Code Assessable If - (1) Not self-assessable; (2) Not in sub-area - (a) MDR1; or (b) MDR2; or (c) MDR3; (3) The building height is - (a) 8.5 metres or less above ground level; (b) 2 storey or less; (4) The use does not involve built to boundary walls that - (a) are greater than 7 metres in total length; (b) are greater than 3 metres in height; (c) have windows or doors	■ Acceptable Solutions in section 6.11.5 of the Dwelling House Code ■ Acceptable Solutions of section 8.5.4 of the Development Near Underground Infrastructure Code ■ Acceptable Solutions in section 7.4.4 of the Domestic Driveway Crossover Code ■ Acceptable Solutions in section 8.6.4 of the Erosion Prevention and Sediment Control Code ■ Acceptable Solutions A1.(1)(a) and (c) in section 7.6.4 of the Excavation and Fill Code ■ Medium Density Residential Zone Code ■ Dwelling House Code ■ Development Near Underground Infrastructure Code ■ Domestic Driveway Crossover Code ■ Erosion Prevention and Sediment Control Code ■ Excavation and Fill Code ■ Infrastructure Works Code ■ Stormwater Management Code

Medium Density Residential Zone - Table of Assessment for Material Change of Use of Premises

column 1	column 2	column 3
Use[4.114]	**Level of Assessment**[4.115]	**Assessment Criteria**
	Otherwise - Impact Assessable	
Education Facility	Code Assessable If - (1) In sub-area - (a) MDR1; or (b) MDR3; (2) The use is undertaken as part of a mixed use development Otherwise Impact Assessable	■ Medium Density Residential Zone Code ■ Access and Parking Code ■ Development Near Underground Infrastructure Code ■ Erosion Prevention and Sediment Control Code ■ Excavation and Fill Code ■ Infrastructure Works Code ■ Landscape Code ■ Stormwater Management Code
Estate Sales Office	Self-Assessable If complying with the assessment criteria being the acceptable solutions listed in column 3 Code Assessable If not self-assessable	■ Acceptable Solutions in section 6.12.4 of the Estate Sales Office Code ■ Medium Density Residential Zone Code ■ Estate Sales Office Code ■ Access and Parking Code ■ Development Near Underground Infrastructure Code
Health Care Centre	Self-Assessable If - (1) In sub-area - (a) MDR1; or (b) MDR3; (2) Complying with the assessment criteria being the acceptable solutions in column 3 Code Assessable If - (1) In sub-area - (a) MDR1; or (b) MDR3; (2) The use is undertaken as part of a mixed use development Otherwise - Impact Assessable	■ Acceptable Solutions in section 8.2.4 of the Centre Activity Code ■ Medium Density Residential Zone Code ■ Access and Parking Code ■ Development Near Underground Infrastructure Code ■ Erosion Prevention and Sediment Control Code ■ Excavation and Fill Code ■ Infrastructure Works Code ■ Landscape Code ■ Stormwater Management Code

Medium Density Residential Zone - Table of Assessment for Material Change of Use of Premises

column 1	column 2	column 3
Use[4.114]	**Level of Assessment**[4.115]	**Assessment Criteria**
Home Business	Self-Assessable If - (1) In a dwelling unit approved under this planning scheme if in sub-area - (a) MDR1; or (b) MRD2; or (c) MDR3; (2) Complying with the assessment criteria being the acceptable solutions listed in column 3 Code Assessable If - (1) Not self-assessable; (2) In a dwelling unit approved under this planning scheme if in sub-area - (a) MDR1; or (b) MDR2; or (c) MDR3 Otherwise - Impact Assessable	■ Acceptable Solutions in section 6.15.4 of the Home Business Code ■ Medium Density Residential Zone Code ■ Home Business Code ■ Access and Parking Code And where being carried out in a Domestic Outbuilding - ■ Domestic Outbuilding Code ■ Development Near Underground Infrastructure Code ■ Erosion Prevention and Sediment Control Code ■ Excavation and Fill Code
Indoor Recreation Facility	Code Assessable If - (1) In sub-area - (a) MDR1; or (b) MDR3; (2) The use is undertaken as part of a mixed use development Otherwise - Impact Assessable	■ Medium Density Residential Zone Code ■ Access and Parking Code ■ Development Near Underground Infrastructure Code ■ Erosion Prevention and Sediment Control Code ■ Excavation and Fill Code ■ Infrastructure Works Code ■ Landscape Code ■ Stormwater Management Code
Minor Utility	Exempt	
Mobile Home Park	Code Assessable If - (1) Not in sub-area - (a) MDR1; or (b) MDR2; or (c) MDR 3	■ Medium Density Residential Zone Code ■ Mobile Home Park Code ■ Access and Parking Code ■ Development Near Underground Infrastructure Code ■ Erosion Prevention and Sediment Control Code ■ Excavation and Fill Code ■ Infrastructure Works Code ■ Landscape Code

Medium Density Residential Zone - Table of Assessment for Material Change of Use of Premises

column 1	column 2	column 3
Use[4.114]	**Level of Assessment**[4.115]	**Assessment Criteria**
	Otherwise - Impact Assessable	■ Stormwater Management Code
Multiple Dwelling	Code Assessable If - (1) The use is located on a premises that - (a) is 800m^2 or more in area; (b) has a frontage of 20 metres or more; (2) The building height does not exceed that detailed in Table 2 - Maximum Overall Building Height Otherwise - Impact Assessable	■ Medium Density Residential Zone Code ■ Multiple Dwelling House Code ■ Access and Parking Code ■ Development Near Underground Infrastructure Code ■ Erosion Prevention and Sediment Control Code ■ Excavation and Fill Code ■ Infrastructure Works Code ■ Landscape Code ■ Stormwater Management Code
Outdoor Dining	Code Assessable If - (1) In sub-area - (a) MDR1; or (b) MDR3; (2) The use is undertaken as part of a mixed use development; (3) Having 100m^2 or less gross floor area Otherwise - Impact Assessable	■ Medium Density Residential Zone Code ■ Outdoor Dining Code ■ Access and Parking Code ■ Development Near Underground Infrastructure Code ■ Erosion Prevention and Sediment Control Code ■ Excavation and Fill Code ■ Infrastructure Works Code ■ Landscape Code ■ Stormwater Management Code
Outdoor Recreation	Code Assessable If in sub-area MDR3 Otherwise - Impact Assessable	■ Medium Density Residential Zone Code ■ Access and Parking Code ■ Development Near Underground Infrastructure Code ■ Erosion Prevention and Sediment Control Code ■ Excavation and Fill Code ■ Infrastructure Works Code ■ Landscape Code ■ Stormwater Management Code
Park	Self-Assessable If - (1) Being undertaken by the local government; (2) On land in the ownership or control of the local	■ Acceptable Solutions in section 6.20.4 of the Park Code ■ Acceptable Solutions in section 8.5.4 of the Development Near Underground Infrastructure Code

Medium Density Residential Zone -
Table of Assessment for Material Change of Use of Premises

column 1	column 2	column 3
Use[4.114]	**Level of Assessment**[4.115]	**Assessment Criteria**
	government; (3) Complying with the assessment criteria being the acceptable solutions listed in column 3 Code Assessable If not self-assessable	 ■ Medium Density Residential Zone Code ■ Park Code ■ Access and Parking Code ■ Development Near Underground Infrastructure Code ■ Infrastructure Works Code ■ Landscape Code ■ Stormwater Management Code
Refreshment Establishment	Self-Assessable - If - (1) In sub-area - (a) MDR1; or (b) MDR3; (2) Complying with the assessment criteria being the acceptable solutions in column 3 Code Assessable If - (1) In sub-area - (a) MDR1; or (b) MDR3; (2) The use is undertaken as part of a mixed use development; (3) Having 400m^2 or less gross floor area Otherwise - Impact Assessable	■ Acceptable Solutions in section 8.2.4 of the Centre Activity Code ■ Medium Density Residential Zone Code ■ Access and Parking Code ■ Development Near Underground Infrastructure Code ■ Erosion Prevention and Sediment Control Code ■ Excavation and Fill Code ■ Infrastructure Works Code ■ Landscape Code ■ Stormwater Management Code
Relatives Apartment	Self-Assessable If - (1) Not in sub-area - (a) MDR1; or (b) MDR2; or (c) MDR3; (2) Complying with the assessment criteria being the acceptable solutions listed in column 3 Code Assessable If -	■ Acceptable Solutions in section 6.21.4 of the Relatives Apartment Code ■ Acceptable Solutions in section 8.5.4 of the Development Near Underground Infrastructure Code ■ Acceptable Solutions in section 8.6.4 of the Erosion Prevention and Sediment Control Code ■ Acceptable Solutions A1.(1)(a) and (c) in section 7.6.4 of the Excavation and Fill Code ■ Medium Density Residential Zone Code

Medium Density Residential Zone - Table of Assessment for Material Change of Use of Premises

column 1	column 2	column 3
Use[4.114]	**Level of Assessment**[4.115]	**Assessment Criteria**
	(1) Not self-assessable; (2) Not in sub-area - (a) MDR1; or (b) MDR2; or (c) MDR 3 Otherwise - Impact Assessable	■ Relatives Apartment Code ■ Development Near Underground Infrastructure Code ■ Erosion Prevention and Sediment Control Code ■ Excavation and Fill Code ■ Stormwater Management Code
Road	Exempt	
Shop	Self-Assessable If - (1) In sub-area - (a) MDR1; or (b) MDR3; (2) Complying with the assessment criteria being the acceptable solutions listed in column 3 Code Assessable If - (1) The use is undertaken as part of a mixed use development; (2) In - (a) sub-area MDR1; (b) having a 400m^2 or less gross floor area; (3) In - (a) sub-area MDR3; (b) having less than 200m^2 gross floor area Otherwise - Impact Assessable	■ Acceptable Solutions in section 8.2.4 of the Centre Activity Code ■ Medium Density Residential Zone Code ■ Access and Parking Code ■ Development Near Underground Infrastructure Code ■ Erosion Prevention and Sediment Control Code ■ Excavation and Fill Code ■ Infrastructure Works Code ■ Landscape Code ■ Stormwater Management Code
Small Lot House	Code Assessable If - (1) Not in sub-area - (a) MDR1; or (b) MDR2; (2) The premises - (a) is greater than 400m^2 and less than 500m^2 in area; (b) has a minimum frontage of 10 metres. (3) The building height is - (a) 8.5 metres or less above ground level;	■ Medium Density Residential Zone Code ■ Small Lot House Code ■ Development Near Underground Infrastructure Code ■ Domestic Driveway Crossover Code ■ Erosion Prevention and Sediment Control Code ■ Excavation and Fill Code ■ Infrastructure Works Code ■ Landscape Code ■ Stormwater Management Code

Medium Density Residential Zone - Table of Assessment for Material Change of Use of Premises

column 1	column 2	column 3
Use[4.114]	**Level of Assessment**[4.115]	**Assessment Criteria**
	(b) 2 storey or less; (4) The use does not involve built to boundary walls that - (a) are greater than 7 metres in total length; (b) are greater than 3 metres in height; (c) have windows or doors Otherwise - Impact Assessable	
Telecommunications Facility	Self-Assessable[4.116] If complying with the assessment criteria being the acceptable solutions listed in column 3 Otherwise - Impact Assessable	■ Acceptable Solutions in section 6.26.4 of the Telecommunications Facility Code ■ Acceptable Solutions in section 8.5.4 of the Development Near Underground Infrastructure Code ■ Acceptable Solutions in section 8.6.4 of the Erosion Prevention and Sediment Control ■ Acceptable Solutions A1.(1)(a) and (c) in section 7.6.4 of the Excavation and Fill Code
Tourist Accommodation	Code Assessable If - (1) In sub-area MDR1; (2) The building height does not exceed that detailed in Table 2 - Maximum Overall Building Height Otherwise - Impact Assessable	■ Medium Density Residential Zone Code ■ Tourist Accommodation Code ■ Access and Parking Code ■ Development Near Underground Infrastructure Code ■ Erosion Prevention and Sediment Control Code ■ Excavation and Fill Code ■ Infrastructure Works Code ■ Landscape Code ■ Stormwater Management Code
Utility Installation	Code Assessable	■ Medium Density Residential Zone Code ■ Access and Parking Code ■ Development Near Underground Infrastructure Code ■ Erosion Prevention and Sediment Control Code ■ Excavation and Fill Code ■ Landscape Code ■ Stormwater Management Code

[4.116] If not self-assessable, a Telecommunication Facility in the Medium Density Residential Zone is impact assessable.

Medium Density Residential Zone - Table of Assessment for Material Change of Use of Premises

column 1	column 2	column 3
Use[4.114]	Level of Assessment[4.115]	Assessment Criteria
Defined uses not listed in column 1	Impact Assessable	
Defined uses listed in column 1 that do not comply with the level of assessment qualifications in column 2	Impact Assessable	
Uses not defined in Part 9 - Schedule 3 - Dictionary, Division 1 - Uses	Impact Assessable	

4.14.5 Medium Density Residential Zone - Table of Assessment for Other Development not associated with a Material Change of Use of Premises

Medium Density Residential Zone - Table of Assessment for Other Development

column 1	column 2	column 3
Other Development	**Level of Assessment**[4.117]	**Assessment Criteria**
Reconfiguration for -		
Creating lots by subdividing another lot by Standard Format Plan[4.118]	Code Assessable	■ Medium Density Residential Zone Code ■ Reconfiguration Code ■ Development Near Underground Infrastructure Code ■ Excavation and Fill Code ■ Infrastructure Works Code ■ Stormwater Management Code
Creating lots by subdividing another lot by - ■ Building Format Plan; or ■ Volumetric Format Plan	Code Assessable	■ Medium Density Residential Zone Code ■ Reconfiguration Code
■ Rearranging the boundaries of a lot by registering a plan of subdivision; or ■ Dividing land into parts by Agreement; or ■ Creating an easement giving access to a lot from a constructed road	Code Assessable	■ Reconfiguration Code
Building Work for -		
Communications Structures	Exempt If minor building work[4.119] Self-Assessable If - (1) Not exempt; (2) Complying with the assessment criteria being the acceptable solutions listed in column 3 Code Assessable If not self-assessable	■ Acceptable Solutions in section 7.2.4 of the Communications Structures Code ■ Communications Structures Code

[4.117] See Schedule 3 - Dictionary, Division 2 - Administrative Terms for a definition of level of assessment.
[4.118] Whether or not having a Community Management Statement.
[4.119] See Schedule 3 - Dictionary, Division 2 - Administrative Terms for a definition of minor building work

Medium Density Residential Zone - Table of Assessment for Other Development

column 1	column 2	column 3
Other Development	**Level of Assessment**[4.117]	**Assessment Criteria**
Domestic Additions	Exempt If minor building work[4.119] Self-Assessable If - (1) Not exempt; (2) Complying with the assessment criteria being the acceptable solutions listed in column 3 **Note -** Non-compliance with the acceptable solutions for self assessable development in relation to setbacks, site cover and built to boundary walls, or nominated "Alternative Provisions" or Building Assessment Provisions identified in the Domestic Additions Code will not elevate the level of assessment of a proposal from self assessable development to assessable development under the Redlands Planning Scheme. Refer to section 7.3.2 of the Domestic Additions Code. Code Assessable If - (1) Not self-assessable; (2) The building height is - (a) 8.5 metres or less above ground level; (b) 2 storey or less; (3) The addition does not involve built to boundary walls that - (a) are greater than 7 metres in total length; (b) are greater than 3 metres in height; (c) have windows or doors Otherwise - Impact Assessable	■ Acceptable Solutions in section 7.3.5 of the Domestic Additions Code ■ Acceptable Solutions in section 8.5.4 of the Development Near Underground Infrastructure Code ■ Acceptable Solutions in section 8.6.4 of the Erosion Prevention and Sediment Control Code ■ Acceptable Solutions A1.(1)(a) and (c) in section 7.6.4 of the Excavation and Fill Code ■ Medium Density Zone Code ■ Domestic Additions Code ■ Development Near Underground Infrastructure Code ■ Erosion Prevention and Sediment Control Code ■ Excavation and Fill Code ■ Infrastructure Works Code ■ Stormwater Management Code

Medium Density Residential Zone - Table of Assessment for Other Development

column 1	column 2	column 3
Other Development	**Level of Assessment**[4.117]	**Assessment Criteria**
Domestic Outbuilding	Exempt If minor building work[4.119] Self-Assessable If - (1) Not exempt; (2) Complying with the assessment criteria being the acceptable solutions listed in column 3 **Note -** Non-compliance with the acceptable solutions for self assessable development in relation to setbacks, site cover and built to boundary walls, or nominated "Alternative Provisions" or Building Assessment Provisions identified in the Domestic Outbuilding Code will not elevate the level of assessment of a proposal from self assessable development to assessable development under the Redlands Planning Scheme. Refer to section 7.5.2 of the Domestic Outbuilding Code. Code Assessable If not self-assessable	■ Acceptable Solutions in section 7.5.5 of the Domestic Outbuilding Code ■ Acceptable Solutions in section 8.5.4 of the Development Near Underground Infrastructure Code ■ Acceptable Solutions in section 8.6.4 of the Erosion Prevention and Sediment Control Code ■ Acceptable Solutions A1.(1)(a) and (c) in section 7.6.4 of the Excavation and Fill Code ■ Medium Density Zone Code ■ Domestic Outbuilding Code ■ Development Near Underground Infrastructure Code ■ Erosion Prevention and Sediment Control Code ■ Excavation and Fill Code
On-site raising or relocation of an existing dwelling unit	Self-Assessable If complying with the assessment criteria being the acceptable solutions listed in column 3 **Note -** Non-compliance with the acceptable solutions for self assessable development in relation to setbacks, site cover and built to boundary walls, or nominated "Alternative Provisions" or Building Assessment Provisions identified in the On-site Raising or Relocation Code will not	■ Acceptable Solutions in section 7.7.5 of the On-Site Raising or Relocation Code ■ Acceptable Solutions in section 8.5.4 of the Development Near Underground Infrastructure Code ■ Acceptable Solutions in section 8.6.4 of the Erosion Prevention and Sediment Control Code ■ Acceptable Solutions A1.(1)(a) and (c) in section 7.6.4 of the Excavation and Fill Code

Medium Density Residential Zone - Table of Assessment for Other Development

column 1	column 2	column 3
Other Development	**Level of Assessment**[4.117]	**Assessment Criteria**
	elevate the level of assessment of a proposal from self assessable development to assessable development under the Redlands Planning Scheme. Refer to section 7.7.2 of the On-site Raising or Relocation Code. Code Assessable If - (1) Not self-assessable; (2) The building height is - (a) 8.5 metres or less above ground level; (b) 2 storey or less; (3) The relocation does not result in built to boundary walls that - (a) are greater than 7 metres in total length; (b) are greater than 3 metres in height; (c) have windows or doors Otherwise - Impact Assessable	■ Medium Density Zone Code ■ On-Site Raising and Relocation Code ■ Development Near Underground Infrastructure Code ■ Erosion Prevention and Sediment Control ■ Excavation and Fill Code ■ Infrastructure Works Code ■ Stormwater Management Code
Private Swimming Pool	Self-Assessable If complying with the assessment criteria being the acceptable solutions listed in column 3 **Note -** Non-compliance with the acceptable solutions for self assessable development in relation to setbacks, and access and parking, or nominated "Alternative Provisions" or Building Assessment Provisions identified in the Private Swimming Pool Code will not elevate the level of assessment of a proposal from self assessable development to assessable development under the Redlands Planning Scheme. Refer to section 7.8.2 of the Private Swimming Pool Code. Code Assessable If not self-assessable	■ Acceptable Solutions in section 7.8.5 of the Private Swimming Pool Code ■ Private Swimming Pool Code ■ Development Near Underground Infrastructure Code ■ Erosion Prevention and Sediment Control

Medium Density Residential Zone - Table of Assessment for Other Development

column 1	column 2	column 3
Other Development	**Level of Assessment**[4.117]	**Assessment Criteria**
		■ Excavation and Fill Code
Private Tennis Court	Self-Assessable If complying with the assessment criteria being the acceptable solutions listed in column 3 Code Assessable If not self-assessable	■ Acceptable Solutions in section 7.9.4 of the Private Tennis Court Code ■ Private Tennis Court Code ■ Erosion Prevention and Sediment Control Code ■ Excavation and Fill Code ■ Landscape Code
Operational Work for -		
Constructing a Domestic Driveway Crossover	Self-Assessable If complying with the assessment criteria being the acceptable solutions listed in column 3 Code Assessable If not self-assessable	■ Acceptable Solutions in section 7.4.4 of the Domestic Driveway Crossover Code ■ Domestic Driveway Crossover Code
Excavation and Fill	Exempt If - (1) Disturbing less than 50m^3 of soil; (2) A height/depth not exceeding 300mm measured from ground level Self-Assessable If - (1) Not exempt; (2) Complying with the assessment criteria being the acceptable solutions listed in column 3 Code Assessable If not self-assessable	■ Acceptable Solutions in section 8.6.4 of the Erosion Prevention and Sediment Control Code ■ Acceptable Solutions A1.(1)(b),(c),(d) in section 7.6.4 of the Excavation and Fill Code ■ Erosion Prevention and Sediment Control Code ■ Excavation and Fill Code
Placing an Advertising Device on Premises	Self-Assessable If complying with the assessment criteria being the acceptable solutions listed in column 3 Code Assessable If not self-assessable	■ Acceptable Solutions in section 7.1.4 of the Advertising Devices Code ■ Advertising Devices Code

Medium Density Residential Zone - Table of Assessment for Other Development

column 1	column 2	column 3
Other Development	**Level of Assessment**[4.117]	**Assessment Criteria**
Operational Work for Reconfiguring a Lot (by Standard Format Plan)	Code Assessable	■ Reconfiguration Code ■ Development Near Underground Infrastructure ■ Erosion Prevention and Sediment Control Code ■ Excavation and Fill Code ■ Infrastructure Works Code ■ Landscape Code ■ Stormwater Management Code
Private Waterfront Structure	Code Assessable	■ Private Waterfront Structure Code ■ Development Near Underground Infrastructure Code ■ Erosion Prevention and Sediment Control Code ■ Excavation and Fill Code
All other development not listed in column 1	Exempt	

4.14.6 Compliance with Medium Density Residential Zone Code

(1) Development that is consistent with the specific outcomes in section 4.14.8 complies with the Medium Density Residential Zone Code.

Note -

The following planning scheme policies will assist in achieving Specific Outcomes within the Medium Density Residential Zone Code -

- Planning Scheme Policy 5 - Environmental Emissions;
- Planning Scheme Policy 9 - Infrastructure Works;
- Planning Scheme Policy 12 - Social and Economic Impact Assessment.

4.14.7 Overall Outcomes for Medium Density Residential Zone Code

(1) The overall outcomes are the purpose of the Medium Density Residential Zone Code.

(2) The overall outcomes sought for the Medium Density Residential Zone Code are described by five key characteristics[4.120] -

(a) Uses and Other Development;
(b) Built Form and Density;
(c) Amenity;
(d) Environment;
(e) Infrastructure.

Each of these is detailed below.

(a) Uses and Other Development

(i) Provide for a range of residential uses that -
a. are predominately mid-rise housing on lot sizes that offer opportunities for medium density living;
b. provide a range of dwelling types that offer choice, affordability and adaptability;
c. maximise the supply of dwelling units in close proximity to centres and public transport, to the general exclusion of other less compact forms of housing;
d. encourage opportunities for working from home;
e. in sub-area MDR1 - provide for permanent residential and temporary visitor uses including apartment buildings and tourist accommodation;
f. in sub-area MDR2 - require vehicular access from Kingston Avenue rather than Finucane Road through land parcel consolidation and redevelopment;
g. in sub-area MDR3 - provide an integrated retirement community offering a mix of dependent, semi-dependent and independent housing.

(ii) Provide for a range of non-residential uses that -
a. fulfill a local community need and provide opportunities for social interaction and activity;
b. are highly accessible to the residents served;
c. do not compromise the role and function of centres;
d. are not large land consumers that by their scale and nature will diminish the quantity of land within this zone;
e. are located on the major road network rather than local residential streets;
f. do not result in commercial ribbon development;
g. in sub-area MDR1 - are integrated with residential or tourist development to provide facilities and services for the local community and visitors;
h. in sub-area MDR3 - are integrated with aged persons housing, create a community focus, provide meeting places, incorporate limited local services and facilities, and provide recreational and leisure opportunities for the residents and local community.

[4.120] In combination, the overall outcomes in section 4.14.7(2)(a)-(e) define the character of the Medium Density Residential Zone.

(iii) In sub-area MDR1 - restrict lower density residential dwelling unit types, large land consumers and uses that are not readily able to co-exist with more intense forms of housing.

(b) Built Form and Density

(i) The scale of uses and other development contribute to a predominantly medium density residential built form by -
a. providing a range of dwelling units in mid-rise height buildings;
b. buildings are sited, and of a width, depth and bulk that are consistent with the development type and a residential streetscape;
c. in sub-area MDR1 - residential or tourist uses being of a scale and height commensurate with zone;
d. in sub-area MDR3 - responding to the built form of the surrounding development, particularly at the interface to established residential areas;
e. non-residential uses being consistent with the preferred building types expected in the zone.

(ii) The density of uses and other development -
a. utilise land efficiently through infill development that respect existing streetscapes in established areas;
b. where aged persons and special needs housing provide a range of accommodation types that, in total, is consistent with the predominant density in the zone;
c. in sub-area MDR1 - provide a range of dwelling units and tourist accommodation that maximise use of this limited land resource;
d. in sub-area MDR3 - provide a range of housing options for aged persons at a density that is consistent with the zone and the function of the site as an integrated retirement community.

(iii) Lot layout is climatically responsive.

(iv) Buildings incorporate a mix of materials that are responsive to local conditions and styles.

(c) Amenity

(i) Uses and other development achieve a high standard of amenity by -
a. protecting and enhancing places of cultural significance or streetscape value;
b. having access to natural light and ventilation, privacy, and private and communal open space commensurate with the use;
c. maintaining a residential streetscape through housing that actively addresses the street;
d. contributing to high quality useable public open space that meet the needs of the community in the vicinity of the use;
e. maintaining the safety of people and property;
f. eliminating or mitigating impacts associated with light, noise, air and traffic.

(ii) The scale, operational attributes and impacts of non-residential uses maintains a high standard of residential amenity.

(d) Environment

(i) Uses and other development minimise adverse impacts on environmental and scenic values by -
a. responding to topographical features;
b. minimising the need for excavation and fill;
c. protecting the site from erosion;
d. maximising the retention of native plants;
e. maximising the use of planting species that are native and characteristic to the area;
f. incorporating best practice stormwater management and enhancing water quality.

(e) Infrastructure

(i) Uses and other development -
a. make efficient use of existing infrastructure;
b. provide for the upgrade of infrastructure in an orderly and cost effective manner;
c. do not result in unacceptable risk to community infrastructure.

(ii) Uses and other development are serviced by infrastructure including -
a. reticulated water;
b. reticulated sewerage;
c. stormwater drainage;
d. constructed road access;
e. energy;
f. telecommunications;
g. waste and recycling collection.

(iii) Uses and other development reinforce an integrated, legible, efficient and movement network that -
a. incorporate a full range of movement modes including public transport, passenger vehicles, walking and cycling;
b. provide pedestrian, cycle and vehicle movement networks that maximise connectivity, permeability and ease of mobility.

Note -

Summary of Medium Density Residential Zone sub-areas	
Sub-area	**Description**
Sub-area MDR1	Multiple locations
Sub-area MDR2	Kingston Avenue at Alexandra Hills
Sub-area MDR3	Salisbury Street at Redland Bay

4.14.8 Specific Outcomes and Probable Solutions applicable to Assessable Development

Assessable Development			
Specific Outcomes		**Probable Solutions**	
	Uses and Other Development -		
S1.1	Uses identified as inconsistent in Table 1 are not established in the zone.	**P1.1**	No probable solution identified.
S1.2	(1) Land in proximity to centres, services and facilities and public transport is maximised for dwelling units that result in a compact housing form.	**P1.2**	(1) The zone is primarily utilised for - (a) multiple dwellings in the form of townhouses, villas or the like; (b) aged persons and special needs housing that provide a mix of dependent, semi-dependent and independent accommodation; (c) apartment buildings.
S1.3	(1) In sub-area MDR1 - maximise the efficient use of this land through restricting low-rise detached dwelling types.	**P1.3**	(1) Sub-area MDR1 sites are utilised for - (a) multiple dwellings; (b) apartment buildings; (c) tourist accommodation - including motel, serviced and holiday rental units. **Note -** Other dwelling types, such as dwelling house, dual occupancy and small lot house are inconsistent within this sub-area.
S1.4	(1) In sub-area MDR3 - provide an integrated retirement community through provision of a mix of housing specifically designed for aged persons including - (a) independent attached and detached and apartment style dwelling units; (b) semi-independent assisted living dwelling units and apartments; (c) dependent residential aged care facility.	**P1.4**	(1) No probable solution identified.
S1.5	(1) In sub-area MDR 1 - non-residential uses - (a) form a mixed-use component of residential or tourist accommodation uses; (b) are limited to multiple small tenancies offering a variety of services such as convenience shopping, dining, recreational and entertainment opportunities;	**P1.5**	(1) In sub-area MDR1 - non-residential uses are limited to 500m^2 or less gross floor area; or (2) In sub-area MDR 3 - non-residential uses are limited to - (a) shops - a total gross floor area of 700m^2 or less and no single shop tenancy greater than 200m^2 gross floor area; (b) commercial offices - a total of 1000m^2 or less gross floor

Assessable Development			
Specific Outcomes		**Probable Solutions**	
	(c) are located on the street level of residential or tourist uses to provide activity and social interaction; (d) do not impact on the role and function of centres; (e) result in positive economic and social benefits for the local community; or (2) In sub-area MDR3 - non-residential uses are - (a) are integrated with aged persons housing in a mixed-use village style format centred on a landscaped main street; (b) create a community focus and provide meeting places such as refreshment establishments; (c) incorporate limited local services and facilities, including an health care centre, commercial offices and shops; (d) provide recreational and leisure opportunities, such as an indoor recreation centre, for the residents and local community; (e) respects the predominant role of the Redland Bay Neighbourhood Centre. **Note -** Refer to Part 11 - Planning Scheme Policy 12 - Social and Economic Impact Assessment.		area; (c) community, leisure and recreation facilities - at total of 1500m^2 or less gross floor area.
S1.6	(1) The following uses are encouraged - (a) excluding sub-areas - (i) bed and breakfast; (ii) home business; (iii) relatives apartment; or (b) in sub-area MDR1 - (i) home business where in a dwelling unit approved under this planning scheme; or (c) in sub-area MDR3 - (i) aged persons housing.	**P1.6**	(1) No probable solution identified. **Note -** Refer to Part 6 - ■ Division 1 - Aged Persons and Special Needs Housing Code; ■ Division 5 - Bed and Breakfast Code; ■ Division 15 - Home Business Code; ■ Division 21 - Relatives Apartment Code.
S2.1	<u>Built Form and Density -</u> (1) The height of buildings and structures maintain a mid-rise building height; (2) Uses of a lesser height do not	**P2.1**	(1) Building height is less than the heights detailed in Table 2 - Medium Density Residential Zone - Maximum Overall Building Height;

Medium Density Residential Zone

Assessable Development			
Specific Outcomes		**Probable Solutions**	
	prejudice the preferred building form promoted through this zone; (3) Where the Medium Density Residential Zone directly adjoins a zone that requires a lesser building height - building height addresses streetscape, privacy and solar access of adjoining properties; (4) In sub-area MDR3 - building height - (a) is sympathetic to the built form of surrounding development, particularly at the interface to existing residential areas; (b) ensures privacy, vistas and solar access to communal and private open space areas is maintained.		(2) No probable solution identified; (3) No probable solution identified; (4) No probable solution identified. **Note -** Refer to the relevant use code for specific building height assessment criteria.
S2.2	(1) Site coverage of buildings balance built and un-built areas to - (a) provide solar access to living and open space areas; (b) assist in retaining existing native plants; (c) enhance privacy between dwelling units within and external to the use; (d) provide useable communal and private open for the occupants; (e) provide space for service functions including car parking and clothes drying; or (2) In sub-area MDR3, site coverage - (a) facilitates visual and acoustic amenity; (b) minimises the impact of garages on the streetscape; (c) provides for roads and paths that maximise connectivity and accessibility between buildings.	**P2.2**	(1) Site coverage is 50 percent or less unless otherwise specified for the relevant use code; or (2) In sub-area MDR 3 - site coverage is a maximum of 60 percent. **Note -** Refer to the relevant use code for specific site coverage assessment criteria.
S2.3	(1) Setbacks - (a) complement existing front setbacks in the street; (b) maximise the usability of side and rear setbacks for outdoor open space areas, privacy and solar access for the occupants and adjoining uses; (c) in sub-area MDR1 - provide opportunities for enhancing active street frontages; or	**P2.3**	(1) No probable solution identified. **Note -** Refer to the relevant use code for specific setback assessment criteria

Assessable Development			
Specific Outcomes		**Probable Solutions**	
	(d) in sub-area MDR3 - (i) provide articulation to the streetscape; (ii) provide adequate car space in front of dwelling units; (iii) ensure privacy between dwellings and reduce overlooking.		
S2.4	(1) Lot reconfiguration creates larger lot sizes that provide opportunities for medium density housing uses; (2) On sub-arterial roads, consolidates lots to allow access to the development from alternative lower order roads to maximise high order road efficiency and safety; (3) Dwelling unit density is compatible with medium density living while providing land for private and communal open space, resident and visitor parking, landscaping and maintenance of a residential streetscape; (4) For aged persons and special needs housing, density varies depending on the type of accommodation provided; (5) In sub-area MDR1 - densities are increased to maximise opportunities for compact urban housing or tourist accommodation.	**P2.4**	(1) Reconfiguration achieves - (a) lots that are a minimum of 1200m^2; (b) amalgamation of lots to achieve 1200m^2 or greater to provide integrated residential and tourist accommodation uses; (2) No probable solution identified; (3) Residential uses achieve a density of 1 dwelling unit per 200m^2 of site area; (4) For aged persons and special needs housing achieves a density, based on accommodation type provided of - (a) independent units = 1 dwelling unit for 200m^2; (b) semi-dependent units - 1 dwelling unit per 100m^2; (c) dependent units = 1 bed per 50m^2; (5) In sub-area MDR1 - density is determined through site coverage, setbacks and building height criteria.
S2.5	(1) Building design incorporates architectural elements that - (a) exhibit a high degree of interest through the use of colour, angles, and materials; (b) include verandahs, decks, eaves, window hoods or similar elements to create shade and cast shadow; (c) minimise any adverse overshadowing, glare or reflection on adjoining properties; (d) promote an attractive streetscape and encourage safety and surveillance through orientating entrances towards the street; (e) provide physical connections and linkages between buildings, and between buildings and public places,	**P2.5**	(1) No probable solution identified. **Note -** Refer to the relevant use code for specific built form assessment criteria.

Assessable Development			
Specific Outcomes		**Probable Solutions**	
	including parks, to encourage pedestrian movement; (f) integrate with landscape planting and features.		
S2.6	(2) Reconfiguration results in pleasant environments and reduced energy consumption through being climatically responsive by - (a) lots being orientated and of a length and width to - (i) maximise solar access to the north in winter; (ii) minimise solar access to the east and west in summer; (b) having regard to the topography of the land.	**P2.6**	(1) No probable solution identified. **Note -** Refer to Part 7 - Division 11 - Reconfiguration Code for specific climate control assessment criteria.
	Amenity -		
S3.1	Uses and other development do not adversely impact on the cultural heritage values of a registered heritage place(s) or character precinct.	**P3.1**	No probable solution identified.
S3.2	(1) Uses are capable of - (a) receiving solar access; (b) maintaining solar access to the habitable rooms and open space areas of surrounding uses.	**P3.2**	(1) No probable solution identified. **Note -** Refer to the relevant use code for specific solar access assessment criteria
S3.3	(1) Building layout and design maximise privacy (visual and acoustic) through - (a) locating habitable rooms so they do not directly overlook habitable rooms of adjacent uses, either within or adjoining the use; (b) separating noise generating areas from sleeping areas.	**P3.3**	(1) No probable solution identified. **Note -** Refer to the relevant use code for specific privacy assessment criteria.
S3.4	(1) Private and communal open space areas are - (a) clearly defined for their intended user and use; (b) easily accessible from living or common areas; (c) useable in size and dimension; (d) of a suitable slope; (e) capable of receiving solar access.	**P3.4**	(1) No probable solution identified. **Note -** Refer to the relevant use code for specific private and communal open space assessment criteria.

Assessable Development			
Specific Outcomes		**Probable Solutions**	
S3.5	(1) Uses and other development are designed in accordance with the principles of Crime Prevention through Environmental Design (CPTED) to assist in crime prevention, including being - (a) orientated towards the street or parkland to provide opportunities for casual surveillance of public places; (b) designed and well lit to ensure casual surveillance opportunities, particularly for open space, car parking areas and pedestrian and cycle paths.	**P3.5**	(1) No probable solution identified.
S3.6	Due to the limited land resource within this zone, public open space contributions for the purpose of embellishment of existing open space within easy proximity to the use is preferred over the dedication of land.	**P3.6**	No probable solution identified. **Note -** Refer to - ■ Part 11 - Planning Scheme Policy 3 - Contributions and Security Bonding Code; ■ Part 7 - Division 11 - Reconfiguration Code.
S3.7	(1) Artificial lighting does not result in unreasonable disturbance to any person or activity; (2) Glare and reflection from the sun are minimised through material and glazing choice.	**P3.7**	(1) The vertical illumination resulting from direct, reflected or other incidental light emanating from the site does not exceed 8 lux when measured at any point 1.5 metres outside the boundary at or above ground level; (2) No probable solution identified.
S3.8	(1) Noise generated by the use or other development is compatible with that experienced in a residential environment; (2) In sub-areas MDR1 and MDR3- uses locate, design and reduce noise impacts for the benefit of occupants of the use and adjoining uses.	**P3.8**	(1) The use or other development does not generate noise, measured as the $L_{Amax,adj,T}$ parameter, at the boundary of the lot or premises, greater than - (a) 5dB(A) above the background noise level between 7am to 10pm; or (b) 3dB(A) above the background noise level between 10pm to 7am; (2) All measures are taken to achieve the standards detailed in (1) through the location, design, and containment of - (a) mechanical services or utilities, such as air conditioning; (b) facilities such as swimming pools, tennis courts or the like; or (c) non-residential uses, such as dining, entertainment or

Medium Density Residential Zone

Assessable Development			
Specific Outcomes		**Probable Solutions**	
			shopping. **Note -** The $L_{Amax,adj,T}$ parameter is defined in the *Noise Measurement Manual* (Environmental Protection Agency 2000).
S3.9	Air quality impacts are eliminated or mitigated to a level that is compatible with a residential environment by no emission of vibration, odour, fumes, smoke, vapour, steam, soot, ash, dust, grit, oil, radio or electrical interference beyond the premises.	**P3.9**	No probably solution identified. **Note -** Refer to Part 11 - Planning Scheme Policy 5 - Environmental Emissions for further information on noise and air quality impacts.
S3.10	(1) Traffic movements are compatible with that experienced in a residential environment; (2) Where a mixed use is proposed, traffic movement and car parking provision is commensurate with the nature of the use; (3) Where a mixed use is proposed service facilities, waste collection areas and unloading areas are located to minimise any adverse impacts on dwelling units within or adjoining the development.	**P3.10**	(1) No probable solution identified; (2) No probable solution identified; (3) No probable solution identified. **Note -** Refer to Part 8 - Division 1 - Access and Parking Code for specific assessment criteria.
	Environment -		
S4.1	(1) Protect the environment from impacts associated with the use or other development, including - (a) stormwater run-off; (b) water quality; (c) erosion and sediment run-off; (d) weed infestation.	**P4.1**	(1) No probable solution identified.
S4.2	Uses and other development are designed to complement, rather than detract from the landscape.	**P4.2**	No probable solution identified.
S4.3	(1) Minimise the need for excavation and fill - (a) external to the building, basement car parking and facilities associated with the use; (b) by ensuring uses and other development are located and designed to - (i) prevent the unnecessary removal of native plants; (ii) protect overland drainage flows; (iii) protect the amenity of	**P4.3**	(1) No probable solution identified. **Note -** Refer to Part 7 - Division 6 - Excavation and Fill Code for assessment criteria where the site requires earthworks.

Assessable Development			
Specific Outcomes		**Probable Solutions**	
	adjoining properties; (iv) reduce erosion and sediment run-off.		
S4.4	(1) Landscaping - (a) incorporates plant species that are native to the local area; (b) recognises and enhances the landscape character of the local area; (c) maximises use of permeable surfaces and landscaping to reduce stormwater run-off; (d) incorporates landscaping as a component of the stormwater management system.	**P4.4**	(1) Species used for landscaping are selected from the native plant species listed in Part 9 - (a) Schedule 10 - Vegetation Species List; (b) Schedule 9 - Street Trees, where within the road reserve. **Note -** For additional assessment criteria refer to Part 8 - ■ Division 8 - Landscape Code; ■ Division 9 - Stormwater Management Code.
	Infrastructure -		
S5.1	(1) All uses and other development are serviced by infrastructure including - (a) reticulated water; (b) reticulated sewerage; (c) stormwater drainage; (d) constructed road access; (e) energy; (f) telecommunications; (g) waste and recycling collection facilities.	**P5.1**	(1) No probable solution identified.
S5.2	(1) Uses and other development - maximise connectivity and movement by providing - (a) links to public transport routes and activity areas within and external to the use; (b) on-site and off-site pedestrian and cycle paths; (c) clear and direct vehicle access and movement areas within and external to the use; (d) in sub-area MDR2 - restrict vehicular access to Kingston Avenue only and not Finucane Road.	**P5.2**	(1) No probable solution identified. **Note -** Refer to Part 8 - ■ Division 1 - Access and Parking Code for further assessment criteria related to access and internal movement; ■ Division 7 - Infrastructure Works Code for further assessment criteria on provision, design and construction of utility infrastructure and pedestrian and cycle paths.
S5.3	(1) Waste and recycling is managed to minimise impacts on the environment by - (a) locating waste and recycling storage areas to protect amenity and to provide safe manual handling of containers;	**P5.3**	(1) No probable solution identified. **Note -** Refer to Part 11 - Planning Scheme Policy 9 - Infrastructure Works – Chapter 16 – Waste Management for further information on waste and

Assessable Development			
Specific Outcomes		**Probable Solutions**	
	(b) screening waste and recycling container storage areas from view; (c) providing for the cleansing of containers in a manner that does not cause adverse environmental impacts.		recycling container volume, storage, servicing, screening and cleansing.
S5.4	Community infrastructure is able to function effectively during and immediately after flood events.	**P5.4**	Community infrastructure is located at or above the recommended flood levels in Table 3 - Recommended Flood Levels for Community Infrastructure.

Table 1 - Inconsistent Uses

Inconsistent Uses
Agriculture
Airport
Animal Keeping
Bed and Breakfast - in sub-area MDR1, sub-area MDR2, sub-area MDR3
Brothel
Bulky Goods Showroom
Car Wash Facility
Cemetery
Child Care Centre - except in sub-area MDR1 and sub-area MDR3 - where part of a mixed use development
Commercial Office - except in sub-area MDR1 - where part of a mixed use development and where having 400m^2 or less gross floor area and sub-area; or except in sub-area MDR3 - where part of a mixed use development and where having 1000m^2 or less gross floor area
Community Facility - except in sub-area MDR1 and sub-area MDR3 - where part of a mixed used development
Display and Sale Activity
Drive Through Restaurant
Dual Occupancy - in sub-area MDR1, sub-area MDR2, sub-area MDR3
Dwelling House - in sub-area MDR1, sub-area MDR2, sub-area MDR3
Education Facility - except in sub-area MDR1 and sub-area MDR3 - where part of a mixed use development
Emergency Services
Extractive Industry
Forestry
Funeral Parlour
Garden Centre
General Industry
Health Care Facility - except in sub-area MDR1 and sub-area MDR3 - where part of a mixed use development
Heavy Industry
High Impact Industry
Home Business - in sub-area MDR1, sub-area MDR2 and sub-area MDR3 - where not in a dwelling unit approved under this planning scheme
Hospital
Hotel
Indoor Recreation Facility - except in sub-area MDR1 and sub-area MDR3 - where part of a mixed use development
Institution
Intensive Agriculture
Landscape Supply Depot
Marine Services
Mobile Home Park - in sub-area MDR1, sub-area MDR2, sub-area MDR3
Night Club
Outdoor Dining - except in sub-area MDR1 and sub-area MDR3 - where part of a mixed use development and where having 100m^2 or less gross floor area
Outdoor Recreation Facility - except in sub-area MDR3
Passenger Terminal
Place of Worship
Produce Store

Inconsistent Uses
Refreshment Establishment - except in sub-area MDR1 and sub-area MDR3 - where part of a mixed use development and where having 400m^2 or less gross floor area
Relatives Apartment - in sub-area MDR1, sub-area MDR2, sub-area MDR3
Retail Warehouse
Roadside Stall
Rural Enterprise
Service Industry
Service Station
Shop - except - in sub-area MDR1 - where part of a mixed use development and where having less than 400m^2 gross floor area, or in sub-area MDR3 - where part of a mixed use development and where having 200m^2 or less gross floor area
Small Lot House - in sub-area MDR1 and sub-area MDR2
Temporary Use
Tourist Park - in sub-area MDR1 and sub-area MDR2
Vehicle Depot
Vehicle Parking Station
Vehicle Repair Premises
Veterinary Surgery
Warehouse

Table 2 - Maximum Overall Building Height

Location		Maximum Overall Building Height	Maximum Height to the Top of the Floor Level of Highest Habitable Room
General			
Throughout the Zone - other than sub-area MDR1 and a number of MDR3 sites		13 metres	7 metres (3 storey)
Sub-area MDR1			
Capalaba - Refer to Map 1/5			
1	Moreton Bay Road, Pittwin Road North	22 metres	16 metres (6 storey)
2	Mount Cotton Road	19 metres	13 metres (5 storey)
Cleveland - Refer to Map 2/5			
3	Haggup Street, Queen Street, Waterloo Street	19 metres	13 metres (5 storey)
4	Michelle Court	19 metres	13 metres (5 storey)
5	Shore Street, Middle Street, Island Street	19 metres	13 metres (5 storey)
6	Channel Street, Shore Street, Middle Sts	22 metres	16 metres (6 storey)
7	Passage Street	19 metres	13 metres (5 storey)
8	Queen Street, Passage Street, Middle Sts	13 metres	7 metres (3 storey)
9	Middle Street, Shore Street, Wharf Sts	19 metres	13 metres (5 storey)
10	Wharf Street, Shore Street, Middle Sts	19 metres	13 metres (5 storey)
11	North Street, Shore Street East	13 metres	7 metres (3 storey)
Redland Bay - Refer to Map 3/5			
12	Boundary Street, Broadwater Terrace, Esplanade, Stradbroke Street	13 metres	7 metres (3 storey)
13A	Hamilton Street, Esplanade, Peel Street	19 metres	13 metres (5 storey)
13B	Hamilton Street, Esplanade, Peel Street	13 metres	7 metres (3 storey)
14	Gladstone Street, Peel Street and Broadwater Terrace	13 metres	7 metres (3 storey)
15	Weinam Street, Banana Street, Outridge Street, Hamilton Street, Meissner Street	13 metres	7 metres (3 storey)
Coochiemudlo Island - Refer to Map 4/5			
16	Victoria Parade	13 metres	7 metres (3 storey)
Sub-area MDR3			
Redland Bay - Refer to Map 5/5			
17	Salisbury Street	14 metres	8 metres (3 storey)
18	Salisbury Street	13 metres	7 metres (3 storey)
19	Salisbury Street	8.5 metres	(2 storey)
20	Salisbury Street	4.5 metres - 14 metres	(1 - 3 storey)
21	Salisbury Street	4.5 metres	(1 storey)

Table 3 - Recommended Flood Levels for Community Infrastructure

Type of Community Infrastructure	Recommended Flood Level AEP (ARI)
Emergency services, other than police facilities	0.2% (1 in 500 year ARI)
Emergency shelters	0.5% (1 in 200 year ARI)
Police facilities	0.5% (1 in 200 year ARI)
Hospitals and associated facilities	0.2% (1 in 500 year ARI)
Stores of valuable records or items of historic or cultural significance, such as galleries and libraries	0.5% (1 in 200 year ARI)
Power stations	0.2% (1 in 500 year ARI)
Major switch yards	0.2% (1 in 500 year ARI)
Substations	0.5% (1 in 200 year ARI)
Sewerage treatment plants	1% (1 in 100 year ARI)
Water treatment plants	0.5% (1 in 200year ARI)
■ State-controlled roads ■ Works of an electricity entity not otherwise listed in this table ■ Railway lines, stations and associated facilities ■ Aviation facilities ■ Communication network facilities	No specific recommended flood level but development proponents should ensure that the infrastructure is optimally located and designed to achieve suitable levels of service, having regard to the processes and policies of the administering government agency.

Reference - *State Planning Policy Guideline 1/03: Mitigating the Adverse Impacts of Flood, Bushfire and Landslide.*

Map 1/5 - Medium Density Residential Zone - Sub-Area 1 - Capalaba Site Locations

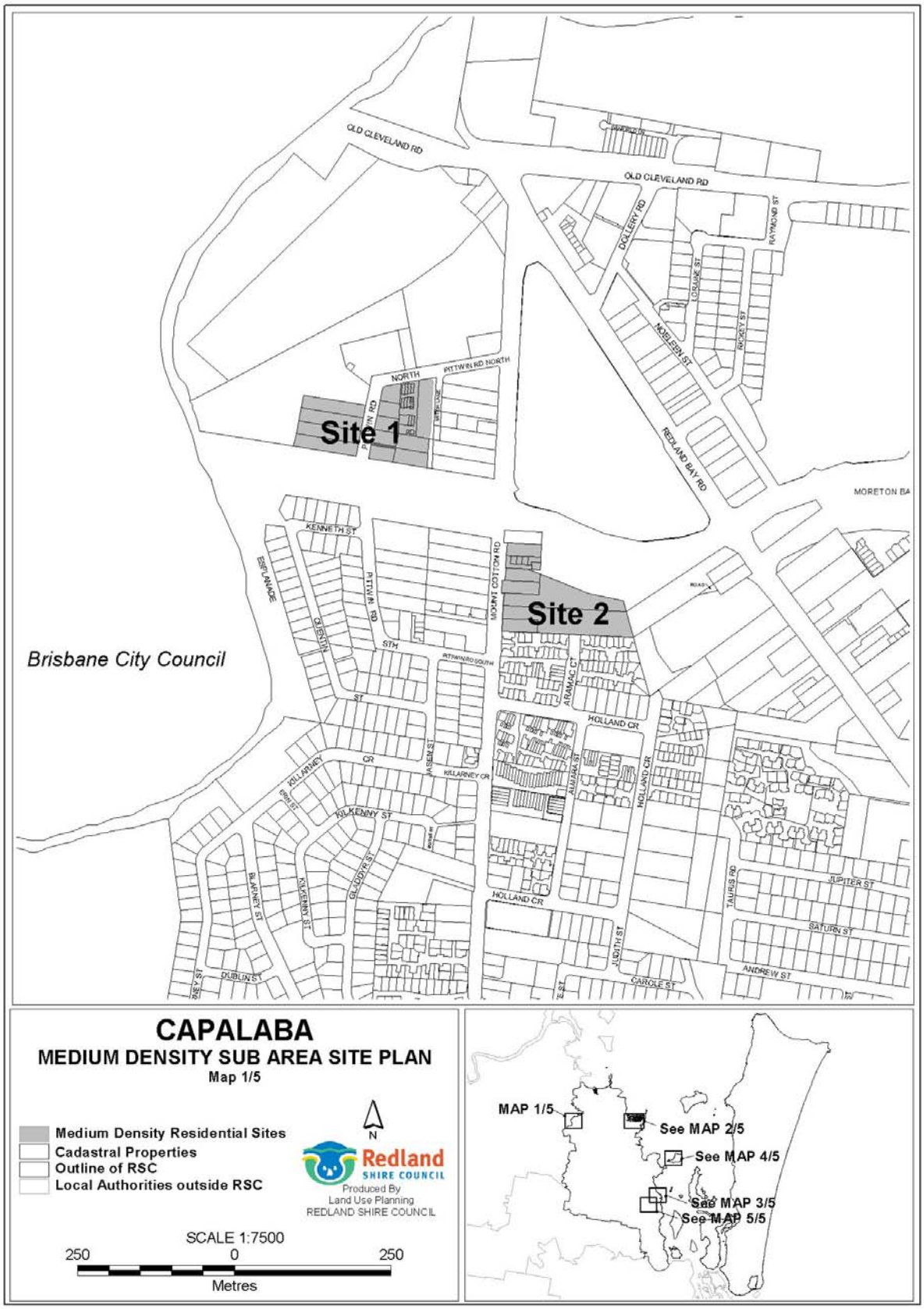

Medium Density Residential Zone

Map 2/5 - Medium Density Residential Zone - Sub-Area 1 - Cleveland Site Locations

Medium Density Residential Zone

Map 3/5 - Medium Density Residential Zone - Sub-Area 1 - Redland Bay Site Locations

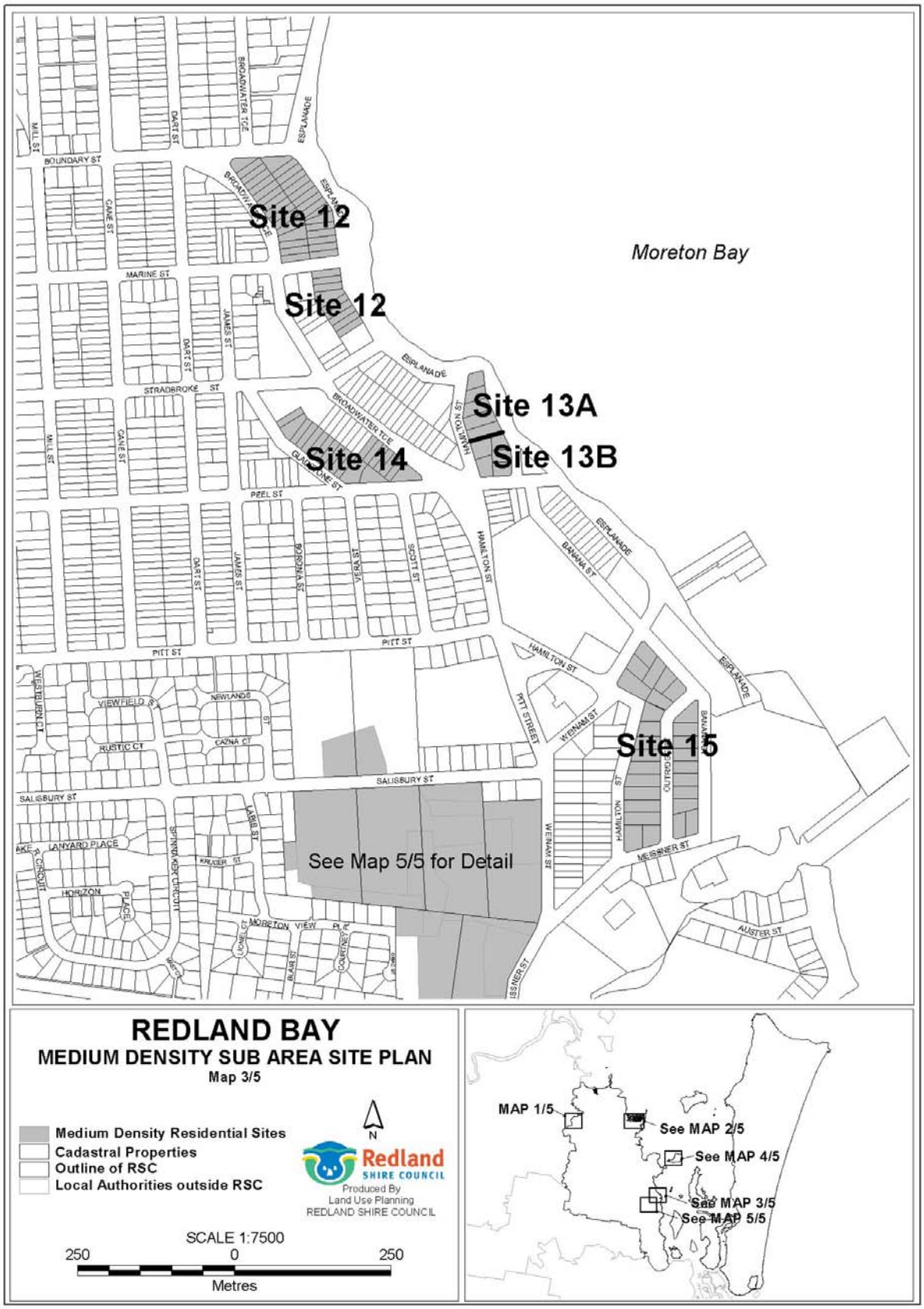

Medium Density Residential Zone

Map 4/5 - Medium Density Residential Zone - Sub-Area 1 - Coochiemudlo Island Site Locations

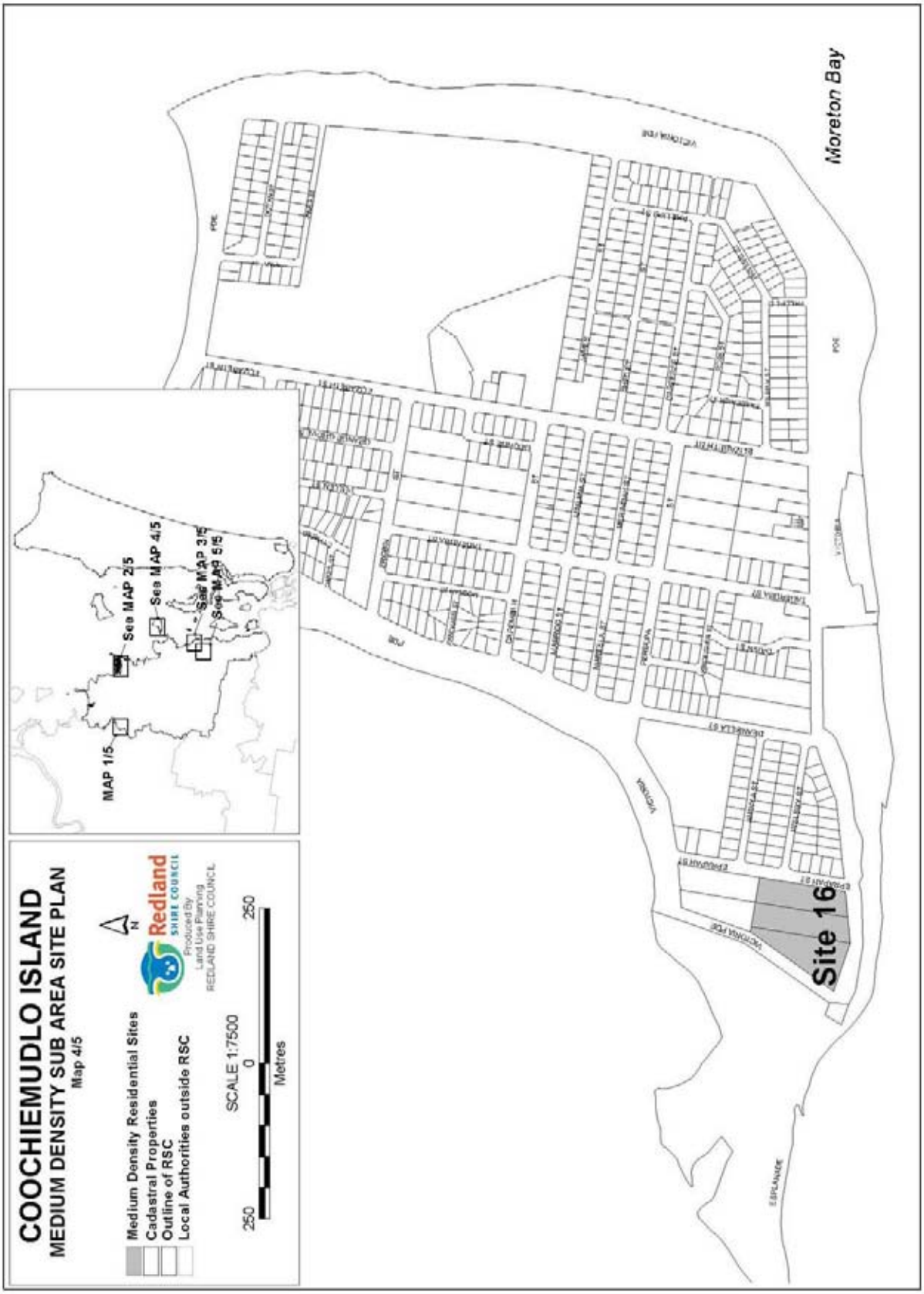

Medium Density Residential Zone

Map 5/5 - Medium Density Residential Zone - Sub-Area 3 -Salisbury Street - Redland Bay Site Locations

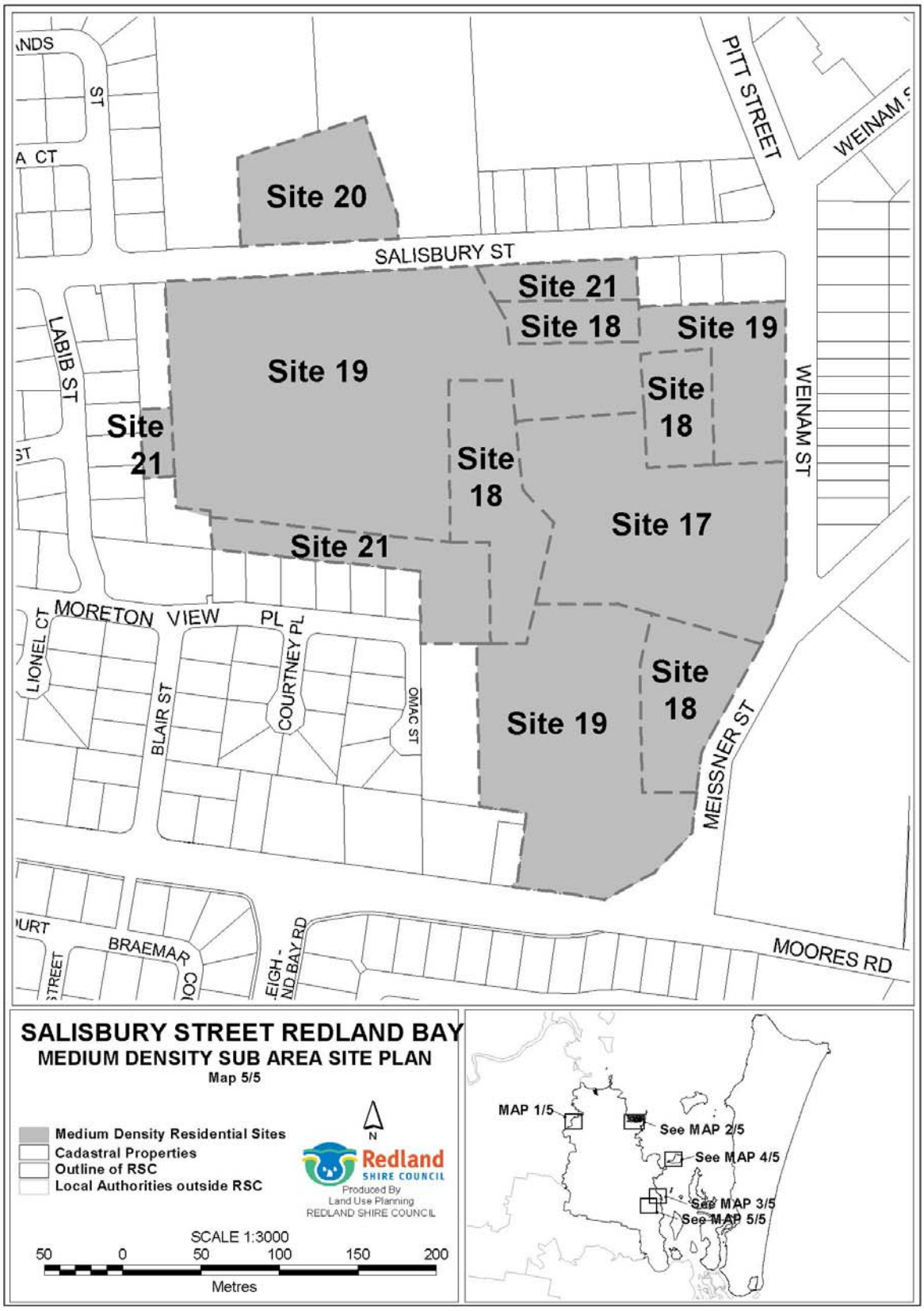

Note -

The boundary of sites 17-21 at Salisbury Street, Redland Bay are indicative pending reconfiguration of the area.

Division 15 - Neighbourhood Centre Zone

4.15.1 Introduction

(1) This division contains the provisions for the Neighbourhood Centre Zone. They are -

(a) The Neighbourhood Centre Zone Tables of Assessment, that incorporates -
- (i) Levels of assessment for development in the Neighbourhood Centre Zone (section 4.15.2);
- (ii) Assessment criteria for development in the Neighbourhood Centre Zone (section 4.15.3);
- (iii) Neighbourhood Centre Zone - Table of Assessment for Material Change of Use of Premises (section 4.15.4);
- (iv) Neighbourhood Centre Zone - Table of Assessment for Other Development not associated with a Material Change of Use of Premises (section 4.15.5).

(b) The Neighbourhood Centre Zone Code, that incorporates -
- (i) Compliance with the Neighbourhood Centre Zone Code (section 4.15.6);
- (ii) Overall Outcomes for the Neighbourhood Centre Zone Code (section 4.15.7);
- (iii) Specific Outcomes and Probable Solutions applicable to Assessable Development (section 4.15.8).

4.15.2 Levels of assessment for development in the Neighbourhood Centre Zone

(2) Sections 4.15.4 and 4.15.5 identify the level of assessment for development in the Neighbourhood Centre Zone, as follows -

(a) section 4.15.4 Neighbourhood Centre Zone - Table of Assessment for Making a Material Change of Use of Premises [4.121] -
- (i) column 1 identifies uses that are exempt, self-assessable or assessable;
- (ii) column 2 identifies the level of assessment for the uses listed in column 1;
- (iii) the use is impact assessable where -
  - a. it is defined in Part 9 - Schedule 3 - Dictionary, Division 1 - Uses and is not listed in column 1; or
  - b. it is listed in column 1 and it does not comply with the level of assessment qualifications listed in column 2; or
  - c. it is not defined in Part 9 - Schedule 3 - Dictionary, Division 1 - Uses.

(b) section 4.15.5 Neighbourhood Centre Zone - Table of Assessment for Other Development not associated with a Material Change of Use of Premises -
- (i) column 1 identifies other development that is exempt, self-assessable or assessable;
- (ii) column 2 identifies the level of assessment for other development listed in column 1;
- (iii) where the other development is not listed in column 1 it is exempt.

(3) Overlays may alter the level of assessment identified in (1) (a) and (b) [4.122].

[4.121] Works associated with an application for a material change of use of premises may be assessed together with the material change of use.

[4.122] Refer to Part 5 - Overlays to determine the level of assessment for the use or other development where an Overlay affects the lot and Part 1, section 1.2.5(10)(f) that explains how the highest level of assessment applies.

4.15.3 Assessment criteria for development in the Neighbourhood Centre Zone

(4) Development in the Neighbourhood Centre Zone is assessed against the assessment criteria listed in column 3 of sections 4.15.4 and 4.15.5, as follows -

(a) acceptable solutions of applicable codes for self-assessable development; or

(b) applicable codes for code assessable development.

(5) Self-assessable development that does not comply with all the acceptable solutions of the applicable codes is assessable development.

(6) Impact assessable development will be assessed against all relevant provisions of the Redlands Planning Scheme.

Note -

- The level of assessment indicated within section 4.15.4 - Neighbourhood Centre Zone - Table of Assessment for Material Change of Use of Premises may be affected by Division 2 of the Regulatory Provisions of the *SEQ Regional Plan 2005-2026.*
- The level of assessment for reconfiguration as indicated within section 4.15.5 - Neighbourhood Centre Zone - Table of Assessment for Other Development not associated with a Material Change of Use of Premises, where within the Regional Landscape and Rural Production Area or Investigation Area of the *SEQ Regional Plan 2005-2026* -
  - complies with Division 3 of the Regulatory Provisions;
  - has a minimum lot size of 100 hectares, unless the subdivision meets an exclusion documented in Division 3.

Note -

Summary of Neighbourhood Centre Zone Sub-areas	
Sub-area	**Description**
Sub-area NC1	Mount Cotton Village and Colburn Avenue, Victoria Point
Sub-area NC2	Redland Bay
Sub-area NC3	Redland Bay Hotel

4.15.4 Neighbourhood Centre Zone - Table of Assessment for Material Change of Use of Premises

Neighbourhood Centre Zone -
Table of Assessment for Material Change of Use of Premises

column 1	column 2	column 3
Use [4.123]	**Level of Assessment** [4.124]	**Assessment Criteria**
Apartment Building	Code Assessable If - (7) In sub-area NC2; (8) The use is undertaken as part of a mixed use development; (9) The building height is 14 metres or less Otherwise - Impact Assessable	■ Neighbourhood Centre Zone Code ■ Apartment Building Code ■ Access and Parking Code ■ Centre Design Code ■ Development Near Underground Infrastructure Code ■ Erosion Prevention and Sediment Control Code ■ Excavation and Fill Code ■ Infrastructure Works Code ■ Landscape Code ■ Stormwater Management Code
Caretakers Dwelling	Code Assessable	■ Neighbourhood Centre Zone Code ■ Caretakers Dwelling Code ■ Centre Design Code
Child Care Centre	Code Assessable If not in sub-area NC3 Otherwise - Impact Assessable	■ Neighbourhood Centre Zone Code ■ Child Care Centre Code ■ Access and Parking Code ■ Centre Design Code ■ Development Near Underground Infrastructure Code ■ Erosion Prevention and Sediment Control Code ■ Excavation and Fill Code ' ■ Infrastructure Works Code ■ Landscape Code ■ Stormwater Management Code
Commercial Office	Self-Assessable If complying with the assessment criteria being the acceptable solutions listed in column 3 Code Assessable If - (1) Not self-assessable; (2) Not in - (a) sub-area NC2 - except where the use is undertaken as part of a mixed use development; or (b) sub-area NC3 - except where the use is	■ Acceptable Solutions in section 8.2.4 of the Centre Activity Code ■ Neighbourhood Centre Zone Code ■ Access and Parking Code ■ Centre Design Code ■ Development Near Underground Infrastructure Code ■ Erosion Prevention and Sediment Control Code ■ Excavation and Fill Code ■ Infrastructure Works Code ■ Landscape Code ■ Stormwater Management Code

[4.123] See Part 9 - Schedule 3 - Dictionary, Division 1 - Uses.
[4.124] See Part 9 - Schedule 3 - Dictionary, Division 2 - Administrative Terms for a definition of level of assessment.

Neighbourhood Centre Zone -
Table of Assessment for Material Change of Use of Premises

column 1	column 2	column 3
Use [4.123]	**Level of Assessment** [4.124]	**Assessment Criteria**
	undertaken in association with a hotel use Otherwise - Impact Assessable	
Community Facility	Code Assessable If not in sub-area NC3 Otherwise - Impact Assessable	■ Neighbourhood Centre Zone Code ■ Access and Parking Code ■ Centre Design Code ■ Development Near Underground Infrastructure Code ■ Erosion Prevention and Sediment Control Code ■ Excavation and Fill Code ■ Infrastructure Works Code ■ Landscape Code ■ Stormwater Management Code
Drive Through Restaurant	Code Assessable If - (1) Not in sub-areas - (a) NC2; or (b) NC3 Otherwise - Impact Assessable	■ Neighbourhood Centre Zone Code ■ Drive Through Restaurant Code ■ Access and Parking Code ■ Centre Design Code ■ Development Near Underground Infrastructure Code ■ Erosion Prevention and Sediment Control Code ■ Excavation and Fill Code ■ Infrastructure Management Code ■ Landscape Code ■ Stormwater Management Code
Education Facility	Code Assessable If not in sub-area NC3 Otherwise - Impact Assessable	■ Neighbourhood Centre Zone Code ■ Access and Parking Code ■ Centre Design Code ■ Development Near Underground Infrastructure Code ■ Erosion Prevention and Sediment Control Code ■ Excavation and Fill Code ■ Infrastructure Works Code ■ Landscape Code ■ Stormwater Management Code
Emergency Services	Code Assessable	■ Neighbourhood Centre Zone Code ■ Access and Parking Code ■ Centre Design Code ■ Development Near Underground Infrastructure Code ■ Erosion Prevention and Sediment Control Code ■ Excavation and Fill Code ■ Infrastructure Works Code ■ Landscape Code ■ Stormwater Management Code

Neighbourhood Centre Zone -
Table of Assessment for Material Change of Use of Premises

column 1	column 2	column 3
Use [4.123]	**Level of Assessment** [4.124]	**Assessment Criteria**
Estate Sales Office	Code Assessable	■ Neighbourhood Centre Zone Code ■ Estate Sales Office Code
Health Care Centre	Self-Assessable If - (1) Not in sub-area NC3; (2) Complying with the assessment criteria being the acceptable solutions listed in column 3 Code Assessable If - (1) Not self-assessable; (2) Not in sub-area NC3 Otherwise - Impact Assessable	■ Acceptable Solutions in section 8.2.4 of the Centre Activity Code ■ Neighbourhood Centre Zone Code ■ Access and Parking Code ■ Centre Design Code ■ Development Near Underground Infrastructure Code ■ Erosion Prevention and Sediment Control Code ■ Excavation and Fill Code ■ Infrastructure Works Code ■ Landscape Code ■ Stormwater Management Code
Home Business	Self-Assessable If - (1) Within a dwelling unit approved under this planning scheme; (2) Complying with the assessment criteria being the acceptable solutions listed in column 3 Code Assessable If not self-assessable	■ Acceptable Solutions in section 6.15.4 of the Home Business Code ■ Neighbourhood Centre Zone Code ■ Home Business Code ■ Access and Parking Code
Hotel	Code Assessable If in sub-area NC3 Otherwise - Impact Assessable	■ Neighbourhood Centre Zone Code ■ Access and Parking Code ■ Centre Design Code ■ Development Near Underground Infrastructure Code ■ Erosion Prevention and Sediment Control Code ■ Excavation and Fill Code ■ Infrastructure Works Code ■ Landscape Code ■ Stormwater Management Code

Neighbourhood Centre Zone -
Table of Assessment for Material Change of Use of Premises

column 1	column 2	column 3
Use [4.123]	**Level of Assessment** [4.124]	**Assessment Criteria**
Indoor Recreation Facility	Code Assessable If not in sub-area NC2 Otherwise - Impact Assessable	■ Neighbourhood Centre Zone Code ■ Access and Parking Code ■ Centre Design Code ■ Development Near Underground Infrastructure Code ■ Erosion Prevention and Sediment Control Code ■ Excavation and Fill Code ■ Infrastructure Works Code ■ Landscape Code ■ Stormwater Management Code
Minor Utility	Exempt	
Outdoor Dining	Code Assessable	■ Neighbourhood Centre Zone Code ■ Outdoor Dining Code
Park	Self-Assessable If - (1) Being undertaken by the local government; (2) On land in the ownership or control of the local government; (3) Complying with the assessment criteria being the acceptable solutions listed in column 3 Code Assessable If not self-assessable	■ Acceptable Solutions in section 6.20.4 of the Park Code ■ Acceptable Solutions in section 8.5.4 of the Development Near Underground Infrastructure Code ■ Neighbourhood Centre Zone Code ■ Park Code ■ Access and Parking Code ■ Development Near Underground Infrastructure Code ■ Infrastructure Works Code ■ Landscape Code ■ Stormwater Management Code
Passenger Terminal	Code Assessable If not in sub-area NC2 Otherwise - Impact Assessable	■ Neighbourhood Centre Zone Code ■ Access and Parking Code ■ Centre Design Code ■ Development Near Underground Infrastructure Code ■ Erosion Prevention and Sediment Control Code ■ Excavation and Fill Code ■ Infrastructure Works Code ■ Landscape Code ■ Stormwater Management Code

Neighbourhood Centre Zone - Table of Assessment for Material Change of Use of Premises

column 1	column 2	column 3
Use [4.123]	**Level of Assessment** [4.124]	**Assessment Criteria**
Place of Worship	Self-Assessable If - (1) Not in sub-area NC3; (2) Complying with the assessment criteria being the acceptable solutions listed in column 3 Code Assessable If - (1) Not self-assessable; (2) Not in sub-area NC3 Otherwise - Impact Assessable	■ Acceptable Solutions in section 8.2.4 of the Centre Activity Code ■ Neighbourhood Centre Zone Code ■ Access and Parking Code ■ Centre Design code ■ Development Near Underground Infrastructure Code ■ Erosion Prevention and Sediment Control Code ■ Excavation and Fill Code ■ Infrastructure Works Code ■ Landscape Code ■ Stormwater Management Code
Refreshment Establishment	Self-Assessable If - (1) 200m^2 or less of gross floor area; (2) Complying with the assessment criteria being the acceptable solutions listed in column 3 Code Assessable If - (1) Not self-assessable; (2) 200m^2 or less of gross floor area; (3) Not in sub-area NC2 - except where the use is undertaken as part of a mixed use development Otherwise - Impact Assessable	■ Acceptable Solutions in section 8.2.4 of the Centre Activity Code ■ Neighbourhood Centre Zone Code ■ Access and Parking Code ■ Centre Design Code ■ Development Near Underground Infrastructure Code ■ Erosion Prevention and Sediment Control Code ■ Excavation and Fill Code ■ Infrastructure Works Code ■ Landscape Code ■ Stormwater Management Code ■ Outdoor Dining Code
Road	Exempt	
Service Industry	Self-Assessable If - (1) Not in sub-areas - (a) NC2; or	■ Acceptable Solutions in section 8.2.4 of the Centre Activity Code

Neighbourhood Centre Zone -
Table of Assessment for Material Change of Use of Premises

column 1	column 2	column 3
Use [4.123]	**Level of Assessment** [4.124]	**Assessment Criteria**
	(b) NC3; (2) 100m^2 or less gross floor area; (3) Complying with the assessment criteria being the acceptable solutions listed in column 3 Code Assessable If - (1) Not in sub-areas - (a) NC2; or (b) NC3; (2) 100m^2 or less gross floor area Otherwise - Impact Assessable	■ Neighbourhood Centre Zone Code ■ Access and Parking Code ■ Centre Design Code ■ Development Near Underground Infrastructure Code ■ Erosion Prevention and Sediment Control Code ■ Excavation and Fill Code ■ Infrastructure Works Code ■ Landscape Code ■ Stormwater Management Code
Shop	Self-Assessable If - (1) Not in sub-areas - (a) NC2; or (b) NC3; (2) 1000m^2 or less gross floor area; (3) Complying with the assessment criteria being the acceptable solutions listed in column 3 Code Assessable If - (1) Not self-assessable; (2) Not in sub-area - (a) NC2 - except where the use is undertaken as part of a mixed use development; or (b) NC3 - except where the use in undertaken in association with a hotel use; (3) 1000m^2 or less gross floor area Otherwise - Impact Assessable	■ Acceptable Solutions in section 8.2.4 of the Centre Activity Code ■ Neighbourhood Centre Zone Code ■ Access and Parking Code ■ Centre Design Code ■ Development Near Underground Infrastructure Code ■ Erosion Prevention and Sediment Control Code ■ Excavation and Fill Code ■ Infrastructure Works Code ■ Landscape Code ■ Stormwater Management Code

Neighbourhood Centre Zone -
Table of Assessment for Material Change of Use of Premises

column 1	column 2	column 3
Use [4.123]	**Level of Assessment** [4.124]	**Assessment Criteria**
Telecommunications Facility	Self-Assessable If complying with the assessment criteria being the acceptable solutions listed in column 3 Code Assessable If not self-assessable	■ Acceptable Solutions in section 6.26.4 of the Telecommunications Facility Code ■ Acceptable Solutions in section 8.5.4 of the Development Near Underground Infrastructure Code ■ Acceptable Solutions in section 8.6.4 of the Erosion Prevention and Sediment Control Code ■ Acceptable Solutions A1.(1)(a) and (c) in section 7.6.4 of the Excavation and Fill Code ■ Neighbourhood Centre Zone Code ■ Telecommunication Facility code ■ Access and Parking Code ■ Development Near Underground Infrastructure Code ■ Erosion Prevention and Sediment Control Code ■ Excavation and Fill Code ■ Infrastructure Works Code ■ Landscape Code
Temporary Use	Self-Assessable If complying with the assessment criteria being the acceptable solutions listed in column 3 Code Assessable If not self-assessable	■ Acceptable Solutions in section 6.27.4 of the Temporary Use Code ■ Neighbourhood Centre Zone Code ■ Temporary Use Code
Tourist Accommodation	Code Assessable If - (1) The use is undertaken as part of a mixed use development; (2) The building height is (a) 14 metres or less in sub-area NC2; or (b) 10 metres or less elsewhere in the zone Otherwise - Impact Assessable	■ Neighbourhood Centre Zone Code ■ Tourist Accommodation Code ■ Access and Parking Code ■ Centre Design Code ■ Development Near Underground Infrastructure Code ■ Erosion Prevention and Sediment Control Code ■ Excavation and Fill Code ■ Infrastructure Works Code ■ Landscape Code ■ Stormwater Management Code

Neighbourhood Centre Zone - Table of Assessment for Material Change of Use of Premises

column 1	column 2	column 3
Use [4.123]	**Level of Assessment** [4.124]	**Assessment Criteria**
Utility Installation	Code Assessable	■ Neighbourhood Centre Zone Code ■ Access and Parking Code ■ Development Near Underground Infrastructure ■ Erosion Prevention and Sediment Control Code ■ Excavation and Fill Code ■ Landscape Code ■ Stormwater Management Code
Vehicle Parking Station	Code Assessable If - (1) Not in sub-area NC2; (2) The use is undertaken as part of a mixed use development Otherwise - Impact Assessable	■ Neighbourhood Centre Zone Code ■ Access and Parking Code ■ Centre Design Code ■ Development Near Underground Infrastructure Code ■ Erosion Prevention and Sediment Control Code ■ Excavation and Fill Code ■ Infrastructure Works Code ■ Landscape Code ■ Stormwater Management Code
Veterinary Surgery	Code Assessable If - (1) Not in sub-areas - (a) NC2; or (b) NC3 Otherwise - Impact Assessable	■ Neighbourhood Centre Zone Code ■ Access and Parking Code ■ Centre Design Code ■ Development Near Underground Infrastructure Code ■ Erosion Prevention and Sediment Control Code ■ Excavation and Fill Code ■ Infrastructure Works Code ■ Landscape Code ■ Stormwater Management Code
Defined uses not listed in column 1	Impact Assessable	
Defined uses listed in column 1 that do not comply with the level of assessment qualifications in column 2	Impact Assessable	
Uses not defined in Part 9 - Schedule 3 - Dictionary, Division 1 - Uses	Impact Assessable	

4.15.5 Neighbourhood Centre Zone - Table of Assessment for Other Development not associated with a Material Change of Use of Premises

Neighbourhood Centre Zone - Table of Assessment for Other Development

column 1	column 2	column 3
Other Development	**Level of Assessment**[4.125]	**Assessment Criteria**
Reconfiguration for -		
Creating lots by subdividing another lot by Standard Format Plan[4.126]	Code Assessable	■ Neighbourhood Centre Zone Code ■ Reconfiguration Code ■ Development Near Underground Infrastructure Code ■ Excavation and Fill Code ■ Infrastructure Works Code ■ Stormwater Management Code
Creating lots by subdividing another lot by - ■ Building Format Plan; or ■ Volumetric Format Plan	Code Assessable	■ Neighbourhood Centre Zone Code ■ Reconfiguration Code
■ Rearranging the boundaries of a lot by registering a plan of subdivision; or ■ Dividing land into parts by Agreement; or ■ Creating an easement giving access to a lot from a constructed road	Code Assessable	■ Reconfiguration Code
Building Work for -		
Communications Structures	Exempt If minor building work[4.127] Self-Assessable If - (1) Not exempt; (2) Complying with the assessment criteria being the acceptable solutions listed in column 3 Code Assessable If not self-assessable	■ Acceptable Solutions in section 7.2.4 of the Communications Structure Code ■ Communications Structures Code

[4.125] See Part 9 - Schedule 3 - Dictionary, Division 2 - Administrative Terms for a definition of level of assessment.
[4.126] Whether or not having a Community Management Statement.
[4.127] See Part 9 - Schedule 3 - Dictionary, Division 2 - Administration Terms for a definition of minor building work.

Neighbourhood Centre Zone - Table of Assessment for Other Development

column 1	column 2	column 3
Other Development	**Level of Assessment**[4.125]	**Assessment Criteria**
Domestic Additions	Exempt If minor building work[4.127] Code Assessable If - (1) The building height is - (a) 8.5 metres or less above ground level; (b) 2 storey or less; (2) The addition does not result in built to the boundary walls Otherwise - Impact Assessable	■ Neighbourhood Centre Zone Code ■ Domestic Additions Code ■ Development Near Underground Infrastructure Code ■ Erosion Prevention and Sediment Control Code ■ Excavation and Fill Code ■ Infrastructure Works Code ■ Stormwater Management Code
Domestic Outbuilding	Exempt If minor building work[4.127] Code Assessable If not exempt	■ Neighbourhood Centre Zone Code ■ Domestic Outbuilding Code ■ Development Near Underground Infrastructure Code ■ Erosion Prevention and Sediment Control Code ■ Excavation and Fill Code
On-site raising or relocation of an existing dwelling unit	Code Assessable If - (1) The building height is - (a) 8.5 metres or less above ground level; (b) 2 storey or less; (2) The relocation does not result in built to the boundary walls Otherwise - Impact Assessable	■ Neighbourhood Centre Zone Code ■ On-Site Raising or Relocation Code ■ Development Near Underground Infrastructure Code ■ Erosion Prevention and Sediment Control Code ■ Excavation and Fill Code ■ Infrastructure Works Code ■ Stormwater Management Code
Private Swimming Pool	Code Assessable	■ Neighbourhood Centre Zone Code ■ Private Swimming Pool Code ■ Development Near Underground Infrastructure Code ■ Erosion Prevention and Sediment Control Code ■ Excavation and Fill Code
Private Tennis Court	Code Assessable	■ Neighbourhood Centre Zone Code ■ Private Tennis Court Code ■ Erosion Prevention and Sediment Control Code ■ Excavation and Fill Code ■ Landscape Code

Neighbourhood Centre Zone - Table of Assessment for Other Development

column 1	column 2	column 3
Other Development	**Level of Assessment**[4.125]	**Assessment Criteria**
Operational Works for -		
Constructing a Domestic Driveway Crossover	Self-Assessable If complying with the assessment criteria being the acceptable solutions listed in column 3 Code Assessable If not self-assessable	■ Acceptable Solutions in section 7.4.4 of the Domestic Driveway Crossover Code ■ Domestic Driveway Crossover Code
Excavation and Fill	Exempt If - (1) Disturbing less than 50m^3 of soil; (2) A height/depth not exceeding 300mm measured from ground level Self-Assessable If - (1) Not exempt; (2) Complying with the assessment criteria being the acceptable solutions listed in column 3 Code Assessable If not self-assessable	■ Acceptable Solutions in section 8.6.4 of the Erosion Prevention and Sediment Control Code ■ Acceptable Solutions A1.(1)(b),(c),(d) in section 7.6.4 of the Excavation and Fill Code ■ Erosion Prevention and Sediment Control Code ■ Excavation and Fill Code
Placing an Advertising Device on Premises	Self-Assessable If complying with the assessment criteria being the acceptable solutions listed in column 3 Code Assessable If not self-assessable	■ Acceptable Solutions in section 7.1.4 of the Advertising Devices Code ■ Advertising Devices Code
Operational Works for Reconfiguring a Lot (by Standard Format Plan)	Code Assessable	■ Reconfiguration Code ■ Erosion Prevention and Sediment Control Code ■ Excavation and Fill Code ■ Infrastructure Works Code ■ Landscape Code ■ Stormwater Management Code ■ Development Near Underground Infrastructure
All other development not listed in column 1	Exempt	

4.15.6 Compliance with Neighbourhood Centre Zone Code

(1) Development that is consistent with the specific outcomes in section 4.15.7, complies with the Neighbourhood Centre Zone Code.

Note -

The following planning scheme policies will assist in achieving specific outcomes within the Neighbourhood Centre Zone Code -

- Planning Scheme Policy 5 - Environmental Emissions;
- Planning Scheme Policy 9 - Infrastructure Works;
- Planning Scheme Policy 12 - Social and Economic Impact Assessment.

4.15.7 Overall Outcomes for Neighbourhood Centre Zone Code

(1) The overall outcomes are the purpose of the Neighbourhood Centre Zone Code.

(2) The overall outcomes sought for the Neighbourhood Centre Zone Code are described by five key characteristics[4.128] -

(a) Uses and Other Development;
(b) Built Form and Density;
(c) Amenity;
(d) Environment;
(e) Infrastructure.

Each of these is detailed below.

(a) Uses and Other Development

(i) Centre uses service residential and tourist catchments up to -
a. 5000 people in sub-area NC1;
b. 10 000 people for other areas elsewhere in the zone.

(ii) Provide for a range of centre uses that -
a. enhance and protect the primacy, vitality and vibrancy of the City's network of centres;
b. fulfill a traditional village centre role;
c. meet community needs to serve neighbourhood catchments;
d. limit the size and scale of retailing activities, proportionate to catchment size;
e. includes mini-supermarket, specialty stores, refreshment establishments, limited commercial activities and limited community services;
f. provide for employment opportunities;
g. are conveniently accessible by private vehicle, public transport and pedestrian and cycle routes to the neighbourhood they serve;
h. in sub-area NC1 - provide local convenience shopping for the day to day needs of the local catchment;
i. in sub-area NC2 - are predominantly for residential and tourism accommodation uses where part of a mixed use development;
j. in sub-area NC3 - provide opportunity for the redevelopment or expansion of the existing hotel.

(iii) Provide for a range of residential and tourist accommodation uses that -
a. contribute to the economic and social vitality of the centre;
b. maximise accessibility for a residential population to services, facilities and employment;
c. are designed and integrated as part of a mixed use development;
d. in sub-area NC2 - encourage an increased range of permanent residential and temporary visitor uses including apartment buildings and tourist accommodation where part of a mixed use development.

[4.128] In combination, the overall outcomes in section 4.15.7 (2)(a)-(e) define the character of the Neighbourhood Centre Zone.

(b) Built Form and Density

(i) The scale of uses and other development achieve a high standard of built form and urban design that -
a. reinforce the “sense of place” established by the centre;
b. maintain a low-rise development appearance;
c. do not overwhelm or dominate the centre or adjacent residential land;
d. limit the impact of overshadowing on public and civic places;
e. contribute to an attractive streetscape along all road frontages;
f. ensure a high level of physical and visual interaction and pedestrian access at ground level;
g. in sub-area NC2 - facilitate a greater building height than elsewhere in the zone for apartment buildings and tourist accommodation where part of a mixed use development.

(ii) The density of uses and other development -
a. maximises the coherent and efficient use of land;
b. does not overwhelm or dominate the centre or adjacent zones;
c. provides areas for public space, landscaping and streetscape works.

(c) Amenity

(i) Uses and other development achieve a high standard of amenity by -
a. ensuring car parking areas are discretely located and do not visually dominate the centre;
b. ensuring residential and tourist accommodation uses incorporated as part of a mixed use development have access to natural light and ventilation, privacy and private and communal open space;
c. protecting and enhancing of places of cultural significance and streetscape value;
d. providing useable public and civic places encompassing private land and public road reserves;
e. providing a high quality landscape and streetscape setting that complements the built form and recognises the centre function;
f. mitigating impacts associated with light, noise, air and traffic.

(d) Environment

(i) Uses and other development minimise adverse impacts on environmental values by -
a. minimising the need for cut and fill;
b. protecting the site from erosion;
c. incorporating best practice stormwater management and water quality treatments;
d. maximising the use of planting species that are native to the area.

(e) Infrastructure

(i) Uses and other development within -
a. maximise efficient use of existing infrastructure;
b. provide for the planned extension of urban infrastructure in an orderly and cost effective manner.

(ii) Uses and other development are serviced by infrastructure including -
a. reticulated water;
b. reticulated sewerage;
c. stormwater drainage;
d. constructed road access;
e. energy;
f. telecommunications;
g. waste and recycling collection.

(iii) Uses and other development reinforce a legible, integrated, efficient, safe and attractive movement network that -

a. incorporate a range of movement modes and facilities including public transport, passenger vehicles and delivery and freight vehicles, pedestrians and cyclists;
b. provide pedestrian, cycle and vehicle connectivity and ease of mobility within the centre and with surrounding neighbourhoods and public transport stops and stations;
c. minimise conflicts between traffic using the centre and through traffic and between pedestrians, cyclists and vehicles within the centre;
d. maximise opportunities for the provision of pedestrian and cycle paths throughout the centre.

Note -

Summary of Neighbourhood Centre Zone Sub-areas	
Sub-area	**Description**
Sub-area NC1	Mount Cotton Village and Colburn Avenue, Victoria Point
Sub-area NC2	Redland Bay
Sub-area NC3	Redland Bay Hotel

4.15.8 Specific Outcomes and Probable Solutions applicable to Assessable Development

Assessable Development			
Specific Outcomes		**Probable Solutions**	
	Uses and Other Development -		
S1.1	Uses identified as inconsistent in Table 1 are not established in the zone.	**P1.1**	No probable solution identified.
S1.2	Large retail activities such as full line supermarkets with a gross floor area in excess of 1000m^2 demonstrate no adverse economic and social impact on the established role and function of the City's centres. **Note -** Refer to Part 11 - Planning Scheme Policy 12 - Social and Economic Impact Assessment.	**P1.2**	The gross floor area of a single retail tenancy does not exceed 1000m^2.
S1.3	Residential and tourist accommodation uses are designed and integrated as part of a mixed use development ensuring the maintenance of active street frontages at ground level.	**P1.3**	No probable solution identified.
S1.4	(1) In sub-areas NC2 or NC3 - (a) commercial, retail and refreshment establishment uses are only established where part of a mixed use development incorporating residential and tourist accommodation uses; (b) residential and tourist accommodation uses are maximised to ensure a greater number of residents and tourists can reside or be accommodated in close proximity to services, attractions, facilities and employment opportunities.	**P1.4**	No probable solution identified.
S1.5	In sub-area NC3 - uses consistent with the redevelopment or expansion of the existing hotel are encouraged.	**P1.5**	No probable solution identified.
	Built Form and Density -		
S2.1	(1) Building height adopts a low-rise built form that ensures a high quality appearance when viewed from within and external to the centre; (2) Where a use proposes a building	**P2.1**	(1) Except in sub-area NC2 - building or structures do not exceed 10.5 metres in height above ground level; (2) No probable solution identified; (3) Within sub-area NC2 - buildings or

Assessable Development			
Specific Outcomes		**Probable Solutions**	
	height greater than an existing dwelling unit in an adjoining residential zone, site layout and building design minimises any potential impacts of overshadowing and loss of privacy. (3) Within sub-area NC2 - uses adopt a mid-rise building height that ensures a high quality appearance when viewed from or within the centre, the adjoining neighbourhood and Moreton Bay.		structures do not exceed 14 metres in height above ground level.
S2.2	(1) Site coverage maintains a balance between built and un-built areas of the site contributing to a high quality centre environment by - (a) ensuring adequate areas are available for high quality landscaping and streetscape treatments; (b) providing areas for integrated car parking and servicing functions.	**P2.2**	(1) No probable solution identified.
S2.3	(1) Front setbacks are consistent with the desired streetscape for that part of the centre and provide a generous covered pedestrian environment; (2) Side and rear set backs - (a) maintain privacy, breezes and solar access to adjoining residential zones; (b) provide areas for service functions such as car parking; (c) provide space for landscaping and streetscape treatments; (3) Where land backs onto a residential zone across a street, high quality streetscape treatments inclusive of landscaped buffers are provided along the whole of the rear frontage.	**P2.3**	(1) No probable solution identified; (2) Where a rear and/or side boundary adjoins a residential zone - (a) building setback from the boundary is a minimum of 3 metres or half the height of the building at that point, whichever is greater; (b) this boundary is landscaped with trees that are capable of growing above the height of the eaves of the building within 5 years of planting; (c) is supported by a 2 metre high acoustic and visual screen fence along the entire length of the boundary; (3) No probable solution identified.
S2.4	(1) Building design and layout incorporates architectural elements that - (a) reinforce a high quality centre environment; (b) exhibit a high degree of interest through the use of colour, angles, materials and shadows; (c) provide functional and	**P2.4**	(1) No probable solution identified.

Assessable Development			
Specific Outcomes		**Probable Solutions**	
	attractive facades that contribute to a high quality built form and streetscape along all road frontages; (d) minimise any adverse overshadowing and reflective impact on public and civic places and adjoining residential zones; (e) provide physical connections and linkages between buildings and between buildings and public places, to encourage pedestrian movement; (f) ensure centre buildings have their primary address to the main street frontage; (g) incorporate covered pedestrian walkways by the use of awnings and shade structures throughout the centre; (h) ensure high levels of physical and visual interaction and pedestrian access at ground level.		
	Amenity -		
S3.1	(1) High quality landscape and streetscape treatments are incorporated to - (a) reinforce a sense of place; (b) contribute to the overall attractiveness and function of the centre.	**P3.1**	(1) No probable solution identified.
S3.2	Development does not impact on the cultural heritage values of a registered heritage place(s) or character precinct.	**P3.2**	No probable solution identified.
S3.3	(1) Residential and tourist accommodation uses are capable of receiving solar access; (2) Building design maintains solar access to the habitable rooms and open space areas of adjoining residential zoned properties.	**P3.3**	(1) No probable solution identified; (2) No probable solution identified.
S3.4	(1) Residential and tourist accommodation uses maximise privacy (visual and acoustic) through - (a) locating habitable rooms so they do not directly overlook habitable rooms of adjacent residential uses either within	**P3.4**	(1) No probable solution identified.

Assessable Development			
Specific Outcomes		**Probable Solutions**	
	or adjoining the development; (b) separating noise generating areas from sleeping areas.		
S3.5	(1) Residential and tourist accommodation uses ensure, private and communal open space areas are - (a) clearly defined for their intended user and use; (b) easily accessible from living or common areas; (c) useable in size and dimension.	**P3.5**	(1) No probable solution identified.
S3.6	(1) Artificial light does not result in unreasonable disturbance to any person or activity; (2) Lighting is designed to avoid spilling onto adjoining residential zones; (3) Glare and reflection of the sun are minimised through material and glazing choice.	**P3.6**	(1) No probable solution identified; (2) Where adjoining a residential zone the vertical illumination resulting from direct, reflected or other incidental light emanating from non residential uses on the site does not exceed 8 lux when measured at any point 1.5 metres outside the boundary at or above ground level; (3) No probable solution identified.
S3.7	(1) Noise generated by the use or other development is compatible with that experienced in a neighbourhood centre environment; (2) Where residential and tourist accommodation uses are incorporated as part of a mixed use development or the development adjoins a residential zone, non-residential uses are located, and designed to ameliorate noise impacts.	**P3.7**	(1) No probable solution identified; (2) The use or other development does not generate noise, measured as the $L_{Amax,adj,T}$ parameter, at the boundary of the nearest residential zone, greater than - (a) 5dB(A) above the background noise level between 7 am to 10 pm; or (b) 3dB(A) above the background noise level between 10 pm to 7 am. **Note -** The $L_{Amax,adj,T}$ parameter is defined in the *Noise Measurement Manual*, (Environmental Protection Agency, 2000).
S3.8	Air quality impacts are eliminated or mitigated to a level that is compatible with a neighbourhood centre environment.	**P3.8**	No probable solution identified. **Note -** Refer to Part 11 - Planning Scheme Policy 5 - Environmental Emissions for further information on noise and air quality impacts.
S3.9	(1) Uses and other development reinforce the maintenance of high standard of neighbourhood centre	**P3.9**	(1) No probable solution identified.

Assessable Development			
Specific Outcomes		**Probable Solutions**	
	amenity by - (a) locating air conditioning units and/or refrigeration units so that they are not visually obtrusive and do not cause adverse visual or noise impacts on adjoining premises; (b) locating car parking and servicing areas to minimise impacts on adjoining premises and on the streetscape.		
S3.10	(1) Uses and other development are designed in accordance with the principles of Crime Prevention through Environmental Design (CPTED) to assist in crime prevention by being - (a) orientated towards the street to provide opportunities for casual surveillance of public places; (b) designed and well lit to ensure safety and casual surveillance of car parking areas, and pedestrian and cycle paths.	**P3.10**	(1) No probable solution identified.
	Environment -		
S4.1	(1) Uses and other development are consistent with the effective protection of environmental values from external impacts including - (a) stormwater run-off; (b) water quality; (c) erosion and sediment run-off; (d) pollution control.	**P4.1**	(1) No probable solution identified.
S4.2	Uses and other development are designed to minimise the need for excavation and fill.	**P4.2**	No probable solution identified. **Note -** Refer to Part 7 - Division 6 - Excavation and Fill Code for assessment criteria where the site requires earthworks.
S4.3	(1) Landscaping is designed to incorporate - (a) plant species that are native to the local area; (b) recognises and enhances the landscape character and streetscape of the Neighbourhood centre; (c) incorporate landscaping as a	**P4.3**	(1) Species used for landscaping are selected from the native plants listed in Part 9 - (a) Schedule 10 - Vegetation Species List; (b) Schedule 9 - Street Trees where within the road reserve.

Assessable Development			
Specific Outcomes		**Probable Solutions**	
	component of the stormwater management system.		**Note -** For additional assessment criteria refer to Part 8 - ■ Division 8 - Landscape Code; ■ Division 9 - Stormwater Management Code.
	Infrastructure -		
S5.1	Infrastructure is provided to be readily integrated with existing systems and facilitate for the orderly provision of future systems.	**P5.1**	No probable solution identified.
S5.2	Infrastructure is designed, located, constructed and managed in a manner that recognises and contributes to the sense of place and attractiveness of the neighbourhood centre.	**P5.2**	No probable solution identified.
S5.3	(1) All uses and other development are serviced by infrastructure, including - (a) reticulated water; (b) reticulated sewerage; (c) stormwater drainage; (d) constructed road access; (e) energy; (f) telecommunications; (g) waste and recycling collection facilities.	**P5.3**	(1) No probable solution identified.
S5.4	(1) Waste and recycling is managed to minimise impacts on the environment and nearby premises by - (a) locating waste and recycling storage areas to protect amenity and to provide safe manual handling of containers; (b) screening waste and recycling container storage areas from view; (c) providing for the cleansing of containers in a manner that does not cause adverse environmental impacts; (2) Uses and other development - (a) provide safe and efficient manoeuvring for waste collection vehicles; (b) ensure all bulk waste and recycling containers are serviced off-street and not on roads with public access; (c) ensure sufficient vertical clearance for container	**P5.4**	(1) No probable solution identified. (2) No probable solution identified. (3) No probable solution identified. **Note -** Refer to Part 11 - Planning Scheme Policy 9 - Infrastructure Works – Chapter 16 – Waste Management for further information on waste and recycling container volume, storage, servicing, screening and cleansing. Refer to Part 8 - Division 1 - Access and Parking Code for waste collection vehicle servicing and manoeuvring assessment criteria.

Assessable Development			
Specific Outcomes		**Probable Solutions**	
	servicing; (d) ensure unobstructed access to containers by collection vehicles; (3) Waste and recycling storage is designed and located to - (a) provide adequate container volume to contain the waste and recyclables; (b) provide recycle containers in an equivalent or greater volume to waste containers; (c) provide a dedicated waste and recycling container storage area that is convenient and safe to use; (d) ensure containers are located on impermeable surfaces.		
S5.5	(1) Uses and development maximise the safe, convenient and comfortable movement of public transport passengers, pedestrians and cyclists by providing - (a) links to public transport routes and stops in the most accessible and convenient locations to maximise their use; (b) pedestrian and cycle paths, throughout the centre and linking to surrounding neighbourhoods; (c) paths, building entrances, amenities and seating that support accessibility for people with special needs.	**P5.5**	(1) No probable solution identified. **Note -** Refer to Part 8 - ■ Division 1 - Access and Parking Code for further assessment criteria related to access and internal movement. ■ Division 7 - Infrastructure Works Code for further assessment criteria on provision, design and construction of utility infrastructure and pedestrian and cycle paths;
S5.6	(1) Opportunities for cycling as a modal choice for employees and customers are provided through - (a) clearly defined on-site paths and facilities; (b) secure cycle storage areas, and facilities including showers and lockers for employees; (c) provision of cycle racks for customers.	**P5.6**	(1) Cycling facilities include - (a) on-site bicycle facilities that are designed and constructed in accordance with *AUSTROAD's Traffic Engineering* Practice, Part 14 - Bicycles; (b) the following for employees - (i) 1 bicycle space per 200m^2 of gross floor area; (ii) 1 personal locker per 2 bicycle parking spaces; (iii) 1 shower cubicle with a change area per 5 bicycle spaces; or (iv) 1 shower cubicle with a change area if less than 5 bicycle spaces are required; (c) 1 bicycle space per 200m^2 of gross floor area of customers,

Assessable Development			
Specific Outcomes		**Probable Solutions**	
			up to a maximum of 10 spaces.
S5.7	(1) The design and layout of vehicular access, parking facilities and service delivery areas are - (a) located to minimise disruption to traffic flow, promote efficiency and public transport priority and minimise impact on adjoining residential areas; (b) located and designed to minimise conflicts between pedestrians and cyclists with vehicles and service delivery vehicles and cars; (c) located to maintain an attractive streetscape and complement surrounding residential areas along all road frontages; (d) located to provide for integrated car parking and service delivery areas.	**P5.7**	(1) No probable solution identified.
S5.8	Community infrastructure is able to function effectively during and immediately after flood events.	**P5.8**	Community infrastructure is located at or above the recommended flood levels in Table 2 - Recommended Flood Levels for Community Infrastructure.

Table 1 - Inconsistent Uses

Inconsistent Uses
Agriculture
Airport
Animal Keeping
Apartment Building - where not part of a mixed use development
Bed and Breakfast
Brothel
Bulky Goods Showroom
Car Wash Facility
Cemetery
Commercial Office - in sub-area NC2 - where not part of a mixed use development
Dual Occupancy
Dwelling House
Extractive Industry
Forestry
General Industry
Heavy Industry
High Impact Industry
Intensive Agriculture
Landscape Supply Depot
Marine Services
Mobile Home Park
Multiple Dwelling - except where part of a mixed use development
Night Club - in sub-areas NC1 or NC2
Refreshment Establishment - in sub-area NC2 - where not part of a mixed used development

Inconsistent Uses
Relatives Apartment
Retail Showroom
Roadside Stall
Rural Enterprise
Service Industry - in sub-area NC2; or where having more than 100m^2 of gross floor area
Shop - in sub-area NC2 - where not part of a mixed use development
Small Lot House
Tourist Accommodation - except where part of a mixed use development
Tourist Park
Vehicle Depot
Vehicle Repair Premises - except where part of a service station
Warehouse

Table 2 - Recommended Flood Levels for Community Infrastructure

Type of Community Infrastructure	Recommended Flood Level AEP (ARI)
Emergency services, other than police facilities	0.2% (1 in 500 year ARI)
Emergency shelters	0.5% (1 in 200 years ARI)
Police facilities	0.5% (1 in 200 years ARI)
Hospitals and associated facilities	0.2% (1 in 500 years ARI)
Stores of valuable records or items of historic or cultural significance, such as galleries and libraries	0.5% (1 in 200 years ARI)
Power stations	0.2% (1 in 500 years ARI)
Major switch yards	0.2% (1 in 500 years ARI)
Substations	0.5% (1 in 200 years ARI)
Sewerage treatment plants	1% (1 in 100 years ARI)
Water treatment plants	0.5% (1 in 200 years ARI)
■ State-controlled roads ■ Works of an electricity entity not otherwise listed in this table ■ Railway lines, stations and associated facilities ■ Aviation facilities ■ Communication network facilities	No specific recommended flood level by development proponents should ensure that the infrastructure is optimally located and designed to achieve suitable levels of service, having regard to the processes and policies of the administering government agency.

Reference - State Planning Policy Guideline 1/03: Mitigating the Adverse Impacts of Flood, Bushfire and Landslide.

Division 16 - Open Space Zone

4.16.1 Introduction

(1) This division contains the provisions for the Open Space Zone. They are -

(a) The Open Space Zone Tables of Assessment, that incorporates -
- (i) Levels of assessment for development in the Open Space Zone (section 4.16.2);
- (ii) Assessment criteria for development in the Open Space Zone (section 4.16.3);
- (iii) Open Space Zone - Table of Assessment for Material Change of Use of Premises (section 4.16.4);
- (iv) Open Space Zone - Table of Assessment for Other Development not associated with a Material Change of Use of Premises (section 4.16.5).

(b) The Open Space Zone Code, that incorporates -
- (i) Compliance with the Open Space Zone Code (section 4.16.6);
- (ii) Overall Outcomes for the Open Space Zone Code (section 4.16.7);
- (iii) Specific Outcomes and Probable Solutions applicable to Assessable Development (section 4.16.8).

4.16.2 Levels of assessment for development in the Open Space Zone

(2) Sections 4.16.4 and 4.16.5 identify the level of assessment for development in the Open Space Zone, as follows -

(a) section 4.16.4 Open Space Zone - Table of Assessment for Making a Material Change of Use of Premises[4.129] -
- (i) column 1 identifies uses that are exempt, self-assessable or assessable;
- (ii) column 2 identifies the level of assessment for the uses listed in column 1;
- (iii) The use is impact assessable where -
  - a. it is defined in Part 9 - Schedule 3 - Dictionary, Division 1 - Uses and is not listed in column 1; or
  - b. it is listed in column 1 and does not comply with the level of assessment qualifications listed in column 2; or
  - c. it is not defined in Part 9 - Schedule 3 - Dictionary, Division 1 - Uses.

(b) section 4.16.5 Open Space Zone - Table of Assessment for Other Development not associated with a Material Change of Use of Premises -
- (i) column 1 identifies other development that is exempt, self-assessable or assessable;
- (ii) column 2 identifies the level of assessment for other development listed in column 1;
- (iii) where the other development is not listed in column 1 it is exempt.

(3) Overlays may alter the level of assessment identified in (1)(a) and (b)[4.130].

[4.129] Works associated with an application for a material change of use of premises may be assessed together with the material change of use.

[4.130] Refer to Part 5 - Overlays to determine the level of assessment for the use or other development where an Overlay affects the lot and Part 1, section 1.2.5(10)(e) that explains how the highest level of assessment applies.

4.16.3 Assessment criteria for development in the Open Space Zone

(4) Development in the Open Space Zone is assessed against the assessment criteria listed in column 3 of sections 4.16.4 and 4.16.5, as follows -

(a) acceptable solutions of applicable codes for self-assessable development; or

(b) applicable codes for code assessable development.

(5) Self-assessable development that does not comply with all the acceptable solutions of the applicable codes is assessable development.

(6) Impact assessable development will be assessed against all relevant provisions of the Redlands Planning Scheme.

Note -

- The level of assessment indicated within section 4.16.4 - Open Space Zone - Table of Assessment for Material Change of Use of Premises may be affected by Division 2 of the Regulatory Provisions of the *SEQ Regional Plan 2005-2026.*
- The level of assessment for reconfiguration as indicated within section 4.16.5 - Open Space Zone -Table of Assessment for Other Development not associated with a Material Change of Use of Premises, where within the Regional Landscape and Rural Production Area or Investigation Area of the *SEQ Regional Plan 2005-2026* -
  - complies with Division 3 of the Regulatory Provisions;
  - has a minimum lot size of 100 hectares, unless the subdivision meets an exclusion documented in Division 3.

4.16.4 Open Space Zone - Table of Assessment for Material Change of Use of Premises

Open Space Zone - Table of Assessment for Material Change of Use of Premises

column 1	column 2	column 3
Use[4.131]	**Level of Assessment**[4.132]	**Assessment Criteria**
Caretakers Dwelling	Code Assessable	■ Open Space Zone Code ■ Caretakers Dwelling Code
Community Facility	Code Assessable	■ Open Space Zone Code ■ Access and Parking Code ■ Development Near Underground Infrastructure Code ■ Erosion Prevention and Sediment Control Code ■ Excavation and Fill Code ■ Infrastructure Works Code ■ Landscape Code ■ Stormwater Management Code
Emergency Services	Code Assessable	■ Open Space Zone Code ■ Access and Parking Code ■ Development Near Underground Infrastructure Code ■ Erosion Prevention and Sediment Control Code ■ Excavation and Fill Code ■ Infrastructure Works Code ■ Landscape Code ■ Stormwater Management Code
Minor Utility	Exempt	
Outdoor Dining	Code Assessable	■ Open Space Zone Code ■ Outdoor Dining Code
Outdoor Recreation Facility	Code Assessable If - (7) Being undertaken by the local government; (8) On land in the ownership or control of the local government Otherwise - Impact Assessable	■ Open Space Zone Code ■ Access and Parking Code ■ Development Near Underground Infrastructure Code ■ Erosion Prevention and Sediment Control Code ■ Excavation and Fill Code ■ Infrastructure Works Code ■ Landscape Code ■ Stormwater Management Code

[4.131] See Part 9 - Schedule 3 - Dictionary, Division 1 - Uses.
[4.132] See Part 9 - Schedule 3 - Dictionary, Division 2 - Administrative Terms for a definition of level of assessment.

Open Space Zone - Table of Assessment for Material Change of Use of Premises

column 1	column 2	column 3
Use[4.131]	**Level of Assessment**[4.132]	**Assessment Criteria**
Park	Self-Assessable If - (1) Being undertaken by the local government; (2) On land in the ownership or control of the local government; (3) Complying with the assessment criteria being the acceptable solutions listed in column 3 Code Assessable If not self-assessable	■ Acceptable Solutions in section 6.20.4 of the Park Code ■ Acceptable Solutions of section 8.5.4 of the Development Near Underground Infrastructure Code ■ Open Space Zone Code ■ Park Code ■ Access and Parking Code ■ Development Near Underground Infrastructure Code ■ Infrastructure Works Code ■ Landscape Code ■ Stormwater Management Code
Refreshment Establishment	Code Assessable If 100m^2 or less gross floor area Otherwise - Impact Assessable	■ Open Space Zone Code ■ Access and Parking Code ■ Development Near Underground Infrastructure Code ■ Erosion Prevention and Sediment Control Code ■ Excavation and Fill Code ■ Infrastructure Works Code ■ Landscape Code ■ Stormwater Management Code
Road	Exempt	
Telecommunications Facility	Self-Assessable [4.133] If complying with the assessment criteria being the acceptable solutions listed in column 3 Otherwise - Impact Assessable	■ Acceptable Solutions in section 6.26.4 of the Telecommunications Facility Code ■ Acceptable Solutions in section 8.5.4 of the Development Near Underground Infrastructure Code ■ Acceptable Solutions in section 8.6.4 of the Erosion Prevention and Sediment Control Code ■ Acceptable Solutions A1.(1)(a) and (c) in section 7.6.4 of the Excavation and Fill Code

Open Space Zone

[4.133] If not self-assessable, a Telecommunication Facility in the Open Space Zone is impact assessable.

Open Space Zone - Table of Assessment for Material Change of Use of Premises

column 1	column 2	column 3
Use[4.131]	**Level of Assessment[4.132]**	**Assessment Criteria**
Temporary Use	Self-Assessable If complying with the assessment criteria being the acceptable solutions listed in column 3 Code Assessable If not self-assessable	■ Acceptable Solutions in section 6.27.4 of the Temporary Use Code ■ Open Space Zone Code ■ Temporary Use Code
Tourist Park	Code Assessable If - (1) On land in the ownership or control of the local government; (2) On North Stradbroke Island Otherwise - Impact Assessable	■ Open Space Zone Code ■ Tourist Park Code ■ Access and Parking Code ■ Development Near Underground Infrastructure Code ■ Erosion Prevention and Sediment Control Code ■ Excavation and Fill Code ■ Infrastructure Works Code ■ Landscape Code ■ Stormwater Management Code
Utility Installation	Code Assessable	■ Open Space Zone Code ■ Access and Parking Code ■ Development Near Underground Infrastructure Code ■ Erosion Prevention and Sediment Control Code ■ Excavation and Fill Code ■ Landscape Code ■ Stormwater Management Code
Defined uses not listed in column 1	Impact Assessable	
Defined uses listed in column 1 that do not comply with the level of assessment qualifications in column 2	Impact Assessable	
Uses not defined in Part 9 - Schedule 3 - Dictionary, Division 1 - Uses	Impact Assessable	

4.16.5 Open Space Zone - Table of Assessment for Other Development not associated with a Material Change of Use of Premises

Open Space Zone - Table of Assessment for Other Development

column 1	column 2	column 3
Other Development	**Level of Assessment[4.134]**	**Assessment Criteria**
Reconfiguration for -		
Creating lots by subdividing another lot by Standard Format Plan[4.135]	Code Assessable If being undertaken by the local government Otherwise - Impact Assessable	■ Open Space Zone Code ■ Reconfiguration Code ■ Development Near Underground Infrastructure Code ■ Excavation and Fill Code ■ Infrastructure Works Code ■ Stormwater Management Code
Creating lots by subdividing another lot by - ■ Building Format Plan; or ■ Volumetric Format Plan	Code Assessable	■ Open Space Zone Code ■ Reconfiguration Code
■ Rearranging the boundaries of a lot by registering a plan of subdivision; or ■ Dividing land into parts by Agreement; or ■ Creating an easement giving access to a lot from a constructed road	Code Assessable	■ Reconfiguration Code
Building Work for -		
Communications Structures	Exempt If minor building work[4.136] Self-Assessable If - (1) Not exempt; (2) Complying with the assessment criteria being the acceptable solutions listed in column 3 Code Assessable If not self-assessable	■ Acceptable Solutions in section 7.2.4 of the Communications Structures Code ■ Communications Structures Code

[4.134] See Part 9 - Schedule 3 - Dictionary, Division 2 - Administrative Terms for a definition of level of assessment.
[4.135] Whether or not having a Community Management Statement.
[4.136] See Part 9 - Schedule 3 - Dictionary, Division 2 - Administrative Terms for a definition of minor building work.

Open Space Zone - Table of Assessment for Other Development

column 1	column 2	column 3
Other Development	**Level of Assessment**[4.134]	**Assessment Criteria**
Domestic Additions	Code Assessable	■ Open Space Zone Code ■ Domestic Additions Code ■ Development Near Underground Infrastructure Code ■ Erosion Prevention and Sediment Control Code ■ Excavation and Fill Code ■ Stormwater Management Code
Domestic Outbuilding	Code Assessable	■ Open Space Zone Code ■ Domestic Outbuilding Code ■ Development Near Underground Infrastructure Code ■ Erosion Prevention and Sediment Control Code ■ Excavation and Fill Code
On-site raising or relocation of an existing dwelling unit	Code Assessable	■ Open Space Zone Code ■ On-Site Raising and Relocation Code ■ Development Near Underground Infrastructure Code ■ Erosion Prevention and Sediment Control Code ■ Excavation and Fill Code ■ Infrastructure Works Code ■ Stormwater Management Code
Private Swimming Pool	Code Assessable	■ Open Space Zone Code ■ Private Swimming Pool Code ■ Development Near Underground Infrastructure Code ■ Erosion Prevention and Sediment Control Code ■ Excavation and Fill Code
Private Tennis Court	Code Assessable	■ Open Space Zone Code ■ Private Tennis Court Code ■ Erosion Prevention and Sediment Control Code ■ Excavation and Fill Code ■ Landscape Code
Operational Work for -		
Constructing a Domestic Driveway Crossover	Self-Assessable If complying with the assessment criteria being the acceptable solutions listed in column 3 Code Assessable If not self-assessable	■ Acceptable Solutions in section 7.4.4 of the Domestic Driveway Crossover Code ■ Domestic Driveway Crossover Code

Open Space Zone - Table of Assessment for Other Development

column 1	column 2	column 3
Other Development	**Level of Assessment**[4.134]	**Assessment Criteria**
Excavation and Fill	Exempt If - (1) Disturbing less than 50m^3 of soil; (2) A height/depth not exceeding 300mm measured from ground level Self-Assessable If - (1) Not exempt; (2) Complying with the assessment criteria being the acceptable solutions listed in column 3 Code Assessable If not self-assessable.	■ Acceptable Solutions in section 8.6.4 of the Erosion Prevention and Sediment Control Code ■ Acceptable Solutions A1.(1)(b),(c),(d) in section 7.6.4 of the Excavation and Fill Code ■ Erosion Prevention and Sediment Control Code ■ Excavation and Fill Code
Placing an Advertising Device on Premises	Self-Assessable If complying with the assessment criteria being the acceptable solutions listed in column 3 Code Assessable If not self-assessable	■ Acceptable Solutions in section 7.1.4 of the Advertising Devices Code ■ Advertising Devices Code
Operational Work for Reconfiguring a Lot (by Standard Format Plan)	Code Assessable	■ Reconfiguration Code ■ Access and Parking Code ■ Development Near Underground Infrastructure ■ Erosion Prevention and Sediment Control Code ■ Excavation and Fill Code ■ Infrastructure Works Code ■ Landscape Code ■ Stormwater Management Code
Private Waterfront Structures	Code Assessable	■ Private Waterfront Structure Code ■ Development Near Underground Infrastructure Code ■ Erosion Prevention and Sediment Control Code ■ Excavation and Fill Code
All other development not listed in column 1	Exempt	

4.16.6 Compliance with Open Space Zone Code

(1) Development that is consistent with the specific outcomes in section 4.16.8 complies with the Open Space Zone Code.

Note -

The following planning scheme policy will assist in achieving specific outcomes within the Open Space Zone Code -
- Planning Scheme Policy 5 - Environmental Emissions;
- Planning Scheme Policy 9 - Infrastructure Works.

4.16.7 Overall Outcomes for Open Space Zone Code

(1) The overall outcomes are the purpose of the Open Space Zone Code.

(2) The overall outcomes sought for the Open Space Zone Code are described by six key characteristics[4.137] -

(a) Uses and Other Development;
(b) Open Space Design;
(c) Built Form;
(d) Amenity;
(e) Environment;
(f) Infrastructure.

Each of these is detailed below.

(a) Uses and Other Development

(i) Provide for a range of open space and recreational uses that -
a. meet the active or passive recreational needs of residents and visitors to the City;
b. provide for recreation activities on land in public or private ownership;
c. may include land used for activities not involving access by the general public.

(ii) Provide for a limited range of other uses that -
a. fulfill ancillary functions that are required for the open space to function effectively;
b. do not impact on the amenity and landscape setting of the area.

(iii) Reconfiguration -
a. facilitates the transfer of open space land into the ownership of the local government authority;
b. does not prejudice the future use of this land for open space purposes.

Note -

Refer to Diagram 6 of Part 3 - Division 2 - Strategic Framework for land in the Open Space Zone under local government ownership or control.

(b) Open Space Design

(i) Uses and other development are designed in a manner that -
a. contribute to the legibility and character of the local area;
b. provides adequate facilities that meet community needs and expectations based on the population density and demographic structure expected in the area;
c. provide for a range of passive and active recreational opportunities;
d. enhance opportunities for community interaction;
e. complement the broader open space network;
f. form links between existing open space areas.

[4.137] In combination, the overall outcomes in section 4.16.7(2)(a)-(f) define the character of the Open Space Zone.

(c) Built Form

(i) Uses and other development have a site layout that -
a. utilise land efficiently;
b. provide for vehicle access and parking commensurate with activities expected on the site;
c. incorporate existing landscape and topographic features;
d. retain and integrate existing native plants;
e. support the retention and enhancement of habitats and corridors;
f. assist in the identification of entry points and paths;
g. maximise visibility of public and semi-public areas to encourage casual surveillance.

(ii) The scale of uses and other development -
a. is compatible with that of the surrounding area;
b. positively contributes to the visual amenity of the area;
c. is consistent with the open space nature of the zone and the specific function of the site.

(iii) Buildings design -
a. facilitates the intended use while being compatible with the predominant built form in the surrounding area;
b. is physically accessible for all the community;
c. maximises Crime Prevention Through Environmental design (CPTED) principles;
d. incorporates architectural elements and a mix of materials that are responsive to local conditions and styles.

(d) Amenity

(i) Uses and other development achieve a high standard of amenity by -
a. providing high quality useable public and private open space that meets the needs of community;
b. creating open space areas that are safe and comfortable for users;
c. contributing to the livability of the City through the provision of visual relief from the built environment;
d. providing a landscape setting that complements the specific open space function of the site;
e. eliminating or mitigating impacts associated with light, noise, air and traffic.

(e) Environment

(i) Uses and other development minimise adverse impacts on environmental and scenic values by -
a. responding to topographical features;
b. minimising the need for excavation and fill;
c. protecting the site from erosion;
d. minimising the need to clear native plants;
e. maximising the use of plant species that are native to the area;
f. incorporating best practice stormwater management that minimises adverse impacts associated with run-off;
g. enhancing water quality and minimise adverse impacts of potentially water and soil contaminating substances.

(f) Infrastructure

(i) Uses and other development -
a. maximise use of existing infrastructure;
b. provide for the extension of infrastructure in an orderly and cost effective manner;
c. do not result in unacceptable risk to community infrastructure.

(ii) Uses and other development are serviced by infrastructure including -
a. reticulated water or adequate potable water supply;
b. reticulated sewerage; or

c. where the site is not able to be connected to a reticulated sewerage system, wastewater is treated and disposed of on-site subject to site, soil and locational constraints;
d. stormwater drainage;
e. constructed road access;
f. energy;
g. telecommunications;
h. waste and recycling collection.

(iii) Uses and other development reinforce an integrated, legible, efficient and safe movement network that -
a. incorporates and provides a range of movement modes including passenger vehicles, pedestrian and cycling and where possible public transport;
b. provides for pedestrian, cycle and vehicle movement networks that maximise connectivity, permeability and ease of mobility throughout the site and to adjoining areas;
c. minimises conflict between traffic generated by the use and adjoining land uses.

(iv) Uses manage the generation, storage and disposal of waste commensurate with the specific activities of the use.

4.16.8 Specific Outcomes and Probable Solutions applicable to Assessable Developm ent

Assessable Development			
Specific Outcomes		**Probable Solutions**	
	Uses and Other Development -		
S1.1	Uses identified as inconsistent in Table 1 are not established or undertaken in the zone.	**P1.1**	No probable solution identified.
S1.2	(1) The following activities are consistent in the zone - (a) parks that - (i) complement environmental attributes such as nature based, water focussed or the like; (ii) serve diverse demographic and community needs such as local play, sport field or showground or the like; (iii) are themed to showcase specific attributes such as ornamental gardens, showgrounds or the like; (b) outdoor recreation facilities such as fields, tracks, race courses, arenas and trails, pools, golf courses and ranges, courts, and the like and ancillary facilities including clubhouses and canteens; (c) community facilities such as cultural, social or community based uses such as halls, showgrounds or the like; (d) utility installations and minor utilities where necessary to - (i) protect the safety of people and property; (ii) provide essential services to the community.	**P1.2**	(1) No probable solution identified.
S1.3	(1) Reconfiguration - (a) facilitates the transfer of open space land into the ownership of the local government; (b) enhances social, cultural and recreational opportunities; (c) provides linkages between existing and/or open space areas; (d) does not prejudice the future use of this land for open space purposes.	**P1.3**	(1) No probable solution identified.

Assessable Development			
Specific Outcomes		**Probable Solutions**	
S2.	Open Space Design - (1) The design of open space sites - (a) contributes to the legibility and character of the local area through - (i) facilitating movement networks, specifically pedestrians and cyclists; (ii) encouraging walking and cycling; (iii) being suited to the locational attributes of the area; (b) provides adequate facilities that meet community needs and expectations based on - (i) the demographic profiles of surrounding areas; (ii) the density of residential development in surrounding areas; (c) provides for a range of passive and active recreational opportunities, and preferably a mixture of varied activities within the site; (d) facilitates community interaction as a place to meet, socialise and recreate; (e) complements adjoining and nearby open space areas to facilitate an open space network that in combination offer a diversity of outdoor activities; (f) integrates with adjoining open space areas through - (i) interlinking pedestrian and cycle paths; (ii) providing complementary activities and facilities.	**P2.**	(1) No probable solution identified.
S3.1	Built Form - (1) Site layout - (a) complements the existing landscape features of the site including - (i) topography; (ii) native plants; (iii) bushland habitats and corridors; (iv) foreshore areas, waterways and wetlands; (b) uses the site efficiently and allocates sufficient areas for all activities related to the use;	**P3.1**	(1) No probable solution identified.

Assessable Development			
Specific Outcomes		**Probable Solutions**	
	(c) provides for vehicle access to the use, that does not adversely affect the function of the road from which the use is accessed; (d) locates parking areas and entries at visible locations that have easy and direct access to facilities or buildings associated with the use; (e) is designed to maximise personal safety of users; (f) provides sufficient areas for servicing, manouevring and loading/unloading as applicable to the specific use.		
S3.2	(1) Building height - (a) does not - (i) dominate the predominantly open space nature of the site; (ii) result in overshadowing of key outdoor areas; (b) respects the existing streetscape and adopts the predominant height of nearby buildings; (c) where a use involves a building or structure that is higher the predominant building height of nearby buildings all necessary measures are taken to mitigate the impact of overshadowing, loss of privacy or the like.	**P3.2**	(1) Building height - (a) is 8.5 metres or less above ground level; or (b) for specific recreational activities - is a height appropriate to the function of the activity. **Note -** Building height of sports complexes may vary depending on the sporting activity undertaken. Refer to *Sports Dimensions for Playing Areas - Fourth Edition 1998.*
S3.3	(1) Site coverage of buildings and any other hard surface areas minimise built areas to - (a) emphasise the function of this zone as a open landscape that offers relief from the built environment; (b) assist in retaining existing native plants, habitat areas and corridors; (c) provide sufficient areas for access, parking, manouevring and service functions while designing these in a manner that - (i) maximise permeable surfaces; (ii) complements the open space nature of the zone. (d) facilitate stormwater and flood management.	**P3.3**	(1) No probable solution identified.

Assessable Development			
Specific Outcomes		**Probable Solutions**	
S3.4	(1) Setbacks of buildings from property boundaries - (a) allow for the safe and efficient use of the site; (b) allow for planted landscaping to support built form; (c) provide car parking at visible locations that has easy and direct pedestrian access to building entries and recreation areas; (d) enable the effective location of overland flow paths and utility infrastructure; (e) minimise visual impacts on key scenic sight lines; (f) are increased where required to provide - (i) overland flow paths associated with flood and stormwater management, (ii) other infrastructure; (iii) car parking.	**P3.4**	(1) No probable solution identified.
S3.5	(1) Where the use incorporates buildings that are visible from public locations and are accessed by the public on a regular basis, they are designed to incorporate architectural elements that - (a) exhibit a high degree of interest through the use of colour, angles, materials and shadows; (b) integrate with landscape planting and prevailing landscape features; (c) maintain human scale; (d) provide interesting, functional and attractive facades that contribute to the streetscape and open space setting and pedestrian experience; (e) minimise any adverse overshadowing and reflective impacts; (f) provide physical connections and linkages between buildings and outdoor areas; (g) are articulated to minimise appearance of building bulk and size.	**P3.5**	(1) No probable solution identified.
S3.6	(1) Uses and other development provide equitable access to all residents and visitors.	**S3.6**	(1) Uses and other development - (a) provide non-discriminatory access to buildings and paths in accordance with *Australian Standard 1428 - Design for Access and Mobility*; (b) are designed to be multi-

Assessable Development			
Specific Outcomes		**Probable Solutions**	
			purpose and easily adapted for future changes of use.
	Amenity -		
S4.1	Development does not adversely impact on the cultural heritage values of a registered heritage place(s) or character precinct.	**P4.1**	No probable solution identified.
S4.2	Buildings are located and designed to maintain the visual prominence of open spaces, significant landmarks and conserve important view corridors.	**P4.2**	No probable solution identified.
S4.3	(1) High quality landscape planting is provided to - (a) provide a focus for the open space nature of the zone; (b) minimise the removal of existing native plants, habitat areas and corridors; (c) support buildings or structures associated with the use to maintain - (i) scale; (ii) screen outdoor, storage and service areas; (iii) create visual relief to the built form; (d) create visual relief and shade, particularly within car parking areas; (e) define - (i) activity areas; (ii) entrances; (iii) car parking areas; (iv) pedestrian and cycle paths.	**P4.3**	(1) No probable solution identified. **Note -** Refer to Part 8 - ■ Division 8 - Landscape Code for general landscaping assessment criteria; ■ Division 1 - Access and Parking Code for car parking landscape assessment criteria.
S4.4	(1) Furniture and equipment - (a) satisfy the functional requirements of the specific activities of the site; (b) include, as appropriate shelters, play equipment, seating, waste containers, water fountains and the like; (c) are durable.	**P4.4**	(1) No probable solution identified.
S4.5	(1) Building design maximises use of the principles of Crime Prevention through Environmental Design (CPTED) to assist in crime prevention including - (a) being orientated towards the street or other active areas; (b) being well lit; (c) providing opportunities for	**P4.5**	(1) No probable solution identified.

Assessable Development			
Specific Outcomes		**Probable Solutions**	
	casual surveillance.		
S4.6	(1) Uses and other development - (a) particularly where catering for night time activities and major spectator events, mitigate or eliminate lighting and noise impacts; (b) including design and orientation of artificial lighting, vehicular access points, car parking, spectator areas and other major noise sources, minimise noise and lighting impacts.	**P4.6**	(1) No probable solution identified. **Note -** For an environmentally relevant activity, noise emissions comply with the requirements of any development approval issued under the *Environmental Protection Act 1994*.
S4.7	(1) Artificial lighting does not result in unreasonable disturbance to any person or activity; (2) Glare and reflection from the sun are minimised through landscape and building material, and glazing choice.	**P4.7**	(1) No probable solution identified; (2) No probable solution identified. **Note -** Refer to Part 11 - Planning Scheme Policy 5 - Environmental Emissions for further information on noise and air quality impacts.
S4.8	(1) Signage clutter is minimised, especially to the external streetscape; (2) Where appropriate - (a) communal signage is provided, preferably in the form of an architectural and landscaped feature; (b) directional, interpretative or signage of a similar nature assist the user in navigating the site and gaining knowledge of the features of the site.	**P4.8**	(1) No probable solution identified; (2) No probable solution identified.
	Environment -		
S5.1	(1) Protect the environment from impacts associated with the use or other development including - (a) stormwater run-off; (b) erosion and sediment run-off; (c) water quality; (d) weed infestation.	**P5.1**	(1) No probable solution identified.
S5.2	(1) Minimise the need for excavation and fill by activities being located and designed to - (a) prevent the unnecessary removal of native plants; (b) protect overland drainage systems; (c) protect the amenity of adjoining properties;	**P5.2**	(1) No probable solution identified. **Note -** Refer to Part 7 - Division 6 - Excavation and Fill Code for assessment criteria.

Assessable Development			
Specific Outcomes		**Probable Solutions**	
	(d) reduce erosion and sediment run-off.		
S5.3	Infrastructure is co-located to minimise the need to remove native plants and adversely impact upon the environmental values of the area.	**P5.3**	No probable solution identified.
S5.4	(1) Landscaping - (a) incorporates plant species that are native to the local area; (b) recognises and enhances the landscape character of the local area; (c) supports the retention and rehabilitation of enhancement areas and corridors; (d) maximises use of permeable surfaces and landscaping to reduce stormwater run-off; (2) Incorporate landscaping as a component of the stormwater management system.	**P5.4**	(1) Species used for landscaping are selected from the native plant species listed in - (a) Schedule 10 - Vegetation Species List; (b) Schedule 9 - Street Trees where within the road reserve. (2) No probable solution identified. **Note -** ■ For additional assessment criteria, refer to Part 8 - ▸ Division 8 - Landscape Code; ▸ Division 9 - Stormwater Management Code.
S5.5	(1) Fences and non-building walls - (a) are minimised to those essential for - (i) the safety of people; (ii) limiting access to service or outdoor storage areas or infrastructure; (b) generally consist of bollards or the like rather than solid or continuous fencing; (c) where required, they are visually attractive and contribute to or blend with planted landscaping and building materials; (d) do not inhibit the movement of native animals.	**P5.5**	(1) No probable solution identified.
	Infrastructure -		
S6.1	(1) All uses are serviced by infrastructure including - (a) reticulated water or adequate potable water supply; (b) reticulated sewerage; or (c) where the site can not be connected to a reticulated sewerage system, wastewater - (i) is treated and disposed of on-site, subject to site, soil and locational constraints; (ii) reduces the potential for - a. contaminating	**P6.1**	(1) No probable solution identified.

Assessable Development			
Specific Outcomes		**Probable Solutions**	
	groundwater, surface water or wetland environments; b. risks to reticulated water supply and public health; (d) stormwater drainage; (e) constructed road access; (f) energy; (g) telecommunications; (h) waste and recycling facilities.		
S6.2	(1) Uses and other development maximise the safe, convenient and comfortable movement of public transport passengers, pedestrians and cyclists by providing - (a) links to public transport routes and stops; (b) pedestrian and cycle paths; (c) pathways, building entrances, amenities and seating that support accessibility for people with special needs.	**P6.2**	(1) No probable solution identified. **Note -** Refer to Part 8 - ■ Division 7 - Infrastructure Works Code for further assessment criteria on provision, design and construction of utility infrastructure and pedestrian and cycle path; ■ Division 1 - Access and Parking Code for further assessment criteria related to access and internal movement.
S6.3	(1) Opportunities for cycling as a modal choice are provided through - (a) clearly defined cycle paths and facilities; (b) secure cycle storage areas and facilities for cyclists.	**P6.3**	(1) No probable solution identified.
S6.4	(1) Vehicular access and parking facilities - (a) are located to minimise disruption to traffic flow; (b) promote use of public transport; (c) minimise impact on adjoining areas; (d) are located and designed to - (i) minimise conflicts between pedestrians and cyclists with vehicles; (ii) maintain a high quality landscape and streetscape from along all road frontages.	**P6.4**	(1) No probable solution identified.
S6.5	(1) Waste and recycling is managed to minimise impacts on the environment and nearby premises by - (a) locating waste and recycling storage areas to protect amenity and to provide safe manual handling of	**P6.5**	(1) No probable solution identified. (2) No probable solution identified. (3) No probable solution identified. **Note -** Refer to Part 11 - Planning Scheme Policy 9 - Infrastructure Works –

Assessable Development			
Specific Outcomes		**Probable Solutions**	
	containers; (b) screening waste and recycling container storage areas from view; (c) providing for the cleansing of containers in a manner that does not cause adverse environmental impacts; (2) Uses and other development - (a) provide safe and efficient manoeuvring for waste collection vehicles; (b) ensure all bulk waste and recycling containers are serviced off-street and not on roads with public access; (c) ensure sufficient vertical clearance for container servicing; (d) ensure unobstructed access to containers by collection vehicles; (3) Waste and recycling storage is designed and located to - (a) provide adequate container volume to contain the waste and recyclables; (b) provide recycle containers in an equivalent or greater volume to waste containers; (c) provide a dedicated waste and recycling container storage area that is convenient and safe to use; (d) ensure containers are located on impermeable surfaces.		Chapter 16 – Waste Management for further information on waste and recycling container volume, storage, servicing, screening and cleansing. Refer to Part 8 - Division 1 - Access and Parking Code for waste collection vehicle servicing and manoeuvring assessment criteria.
S6.6	Community infrastructure is able to function effectively during and immediately after flood events.	**P6.6**	Community infrastructure is located at or above the recommended flood levels in Table 2.

Table 1 - Inconsistent Uses

Inconsistent Uses
Aged Persons and Special Needs Housing
Agriculture
Animal Keeping
Apartment Building
Bed and Breakfast
Brothel
Bulky Goods Showroom
Car Wash Facility
Cemetery
Commercial Office
Display and Sale Activity
Display Dwelling
Drive Through Restaurant
Dual Occupancy
Dwelling House
Estate Sales Office

Inconsistent Uses
Extractive Industry
Forestry
Funeral Parlour
Garden Centre
General Industry
Health Care Centre
Heavy Industry
High Impact Industry
Home Business
Hospital
Hotel
Intensive Agriculture
Landscape Supply Depot
Marine Services
Mobile Home Park
Multiple Dwelling
Night Club
Place of Worship
Produce Store
Refreshment Establishment - where having more than 400m^2 gross floor area
Relatives Apartment
Retail Warehouse
Roadside Stall
Rural Enterprise
Service Industry
Service Station
Shop
Small Lot House
Tourist Accommodation
Vehicle Depot
Vehicle Repair Premises
Veterinary Surgery
Warehouse

Table 2 - Recommended Flood Levels for Community Infrastructure

Type of Community Infrastructure	Recommended Flood Level AEP (ARI)
Emergency services, other than police facilities	0.2% (1 in 500 year ARI)
Emergency shelters	0.5% (1 in 200 year ARI)
Police facilities	0.5% (1 in 200 year ARI)
Hospitals and associated facilities	0.2% (1 in 500 year ARI)
Stores of valuable records or items of historic or cultural significance, such as galleries and libraries	0.5% (1 in 200 year ARI)
Power stations	0.2% (1 in 500 year ARI)
Major switch yards	0.2% (1 in 500 year ARI)
Substations	0.5% (1 in 200 year ARI)
Sewerage treatment plants	1% (1 in 100 year ARI)
Water treatment plants	0.5% (1 in 200 year ARI)
■ State-controlled roads ■ Works of an electricity entity not otherwise listed in this table ■ Railway lines, stations and associated facilities ■ Aviation facilities ■ Communication network facilities	No specific recommended flood level but development proponents should ensure that the infrastructure is optimally located and designed to achieve suitable levels of service, having regard to the processes and policies of the administering government agency.

Reference - *State Planning Policy Guideline 1/03: Mitigating the Adverse Impacts of Flood, Bushfire and Landslide.*

this page purposely
left blank

Division 17 - Park Residential Zone

4.17.1 Introduction

(1) This division contains the provisions for the Park Residential Zone. They are -

(a) The Park Residential Zone Tables of Assessment, that incorporates -
- (i) Levels of assessment for development in the Park Residential Zone (section 4.17.2);
- (ii) Assessment criteria for development in the Park Residential Zone (section 4.17.3);
- (iii) Park Residential Zone - Table of Assessment for Material Change of Use of Premises (section 4.17.4);
- (iv) Park Residential Zone - Table of Assessment for Other Development not associated with a Material Change of Use of Premises (section 4.17.5).

(b) The Park Residential Zone Code, that incorporates -
- (i) Compliance with the Park Residential Zone Code (section 4.17.6);
- (ii) Overall Outcomes for the Park Residential Zone Code (section 4.17.7);
- (iii) Specific Outcomes and Probable Solutions applicable to Assessable Development (section 4.17.8).

4.17.2 Levels of assessment for development in the Park Residential Zone

(2) Sections 4.17.4 and 4.17.5 identify the level of assessment for development in the Park Residential Zone, as follows -

(a) section 4.17.4 Park Residential Zone - Table of Assessment for Making a Material Change of Use of Premises[4.138] -
- (i) column 1 identifies uses that are exempt, self-assessable or assessable;
- (ii) column 2 identifies the level of assessment for the uses listed in column 1;
- (iii) the use is impact assessable where -
  - a. it is defined in Part 9 - Schedule 3 - Dictionary, Division 1 - Uses and is not listed in column 1; or
  - b. it is listed in column 1 and does not comply with the level of assessment qualifications listed in column 2; or
  - c. it is not defined in Part 9 - Schedule 3 - Dictionary, Division 1 - Uses.

(b) section 4.17.5 Park Residential Zone - Table of Assessment for Other Development not associated with a Material Change of Use of Premises -
- (i) column 1 identifies other development that is exempt, self-assessable or assessable;
- (ii) column 2 identifies the level of assessment for other development listed in column 1;
- (iii) where the other development is not listed in column 1 it is exempt.

(3) Overlays may alter the level of assessment identified in (1)(a) and (b)[4.139].

[4.138] Works associated with an application for a material change of use of premises may be assessed together with the material change of use.

[4.139] Refer to Part 5 - Overlays to determine the level of assessment for the use or other development where an Overlay affects the lot and Part 1, section 1.2.5(10)(f) that explains how the highest level of assessment applies.

4.17.3 Assessment criteria for development in the Park Residential Zone

(4) Development in the Park Residential Zone is assessed against the assessment criteria listed in column 3 of sections 4.17.4 and 4.17.5, as follows -

(a) acceptable solutions of applicable codes for self-assessable development; or

(b) applicable codes for code assessable development.

(5) Self-assessable development that does not comply with all the acceptable solutions of the applicable codes is assessable development. Non compliance with only the acceptable solutions for self-assessable development in relation to setbacks and site cover under the QDC or nominated "Alternative Provisions" or Building Assessment Provisions will not elevate the level of assessment of a proposal from self assessable development to assessable development under the Redlands Planning Scheme. In these instances, the local government will undertake the functions of a referral agency with Concurrence Agency jurisdiction under IPA to assess and determine these matters.

(6) Impact assessable development will be assessed against all relevant provisions of the Redlands Planning Scheme.

Note -

- The level of assessment indicated within section 4.17.4 - Park Residential Zone - Table of Assessment for Material Change of Use of Premises may be affected by Division 2 of the Regulatory Provisions of the *SEQ Regional Plan 2005-2026.*
- The level of assessment for reconfiguration as indicated within section 4.17.5 - Park Residential Zone - Table of Assessment for Other Development not associated with a Material Change of Use of Premises, where within the Regional Landscape and Rural Production Area or Investigation Area of the *SEQ Regional Plan 2005-2026* -
  - complies with Division 3 of the Regulatory Provisions;
  - has a minimum lot size of 100 hectares, unless the subdivision meets an exclusion documented in Division 3.

4.17.4 Park Residential Zone - Table of Assessment for Material Change of Use of Premises

Park Residential Zone - Table of Assessment for Material Change of Use of Premises

column 1	column 2	column 3
Use[4.140]	**Level of Assessment**[4.141]	**Assessment Criteria**
Bed and Breakfast	Self-Assessable If complying with the assessment criteria being the acceptable solutions listed in column 3 Code Assessable If not self-assessable	■ Acceptable Solutions in section 6.5.4 of the Bed and Breakfast Code ■ Park Residential Zone Code ■ Bed and Breakfast Code ■ Infrastructure Works Code ■ Landscape Code
Display Dwelling	Code Assessable	■ Park Residential Zone Code ■ Display Dwelling Code
Dwelling House	Self-Assessable If complying with the assessment criteria being the acceptable solutions listed in column 3 **Note -** Non-compliance with the acceptable solutions for self assessable development in relation to setbacks, site cover and built to boundary walls, or nominated "Alternative Provisions" or Building Assessment Provisions identified in the Dwelling House Code will not elevate the level of assessment from self assessable development to assessable development under the Redlands Planning Scheme. Refer to section 6.11.2 of the Dwelling House Code. Code Assessable If - (7) Not self-assessable; (8) The building height is - (a) 8.5 metres or less above ground level; (b) 2 storey or less Otherwise - Impact Assessable	■ Acceptable Solutions in section 6.11.5 of the Dwelling House Code ■ Acceptable Solutions in section 8.5.4 of the Development Near Underground Infrastructure Code ■ Acceptable Solutions in section 7.4.4 of the Domestic Driveway Crossover Code ■ Acceptable Solutions in section 8.6.4 of the Erosion Prevention and Sediment Control Code ■ Acceptable Solutions A1.(1)(a)and(c) in section 7.6.4 of the Excavation and Fill Code ■ Park Residential Zone Code ■ Dwelling House Code ■ Development Near Underground Infrastructure Code ■ Domestic Driveway Crossover Code ■ Erosion Prevention and Sediment Control Code ■ Excavation and Fill Code ■ Infrastructure Works Code ■ Stormwater Management Code

[4.140] See Part 9 - Schedule 3 - Dictionary, Division 1 - Uses.
[4.141] See Part 9 - Schedule 3 - Dictionary, Division 2 - Administrative Terms for a definition of level of assessment.

Park Residential Zone - Table of Assessment for Material Change of Use of Premises

column 1	column 2	column 3
Use[4.140]	**Level of Assessment**[4.141]	**Assessment Criteria**
Estate Sales Office	Self-Assessable If complying with the assessment criteria being the acceptable solutions listed in column 3 Code Assessable If not self-assessable	■ Acceptable Solutions in section 6.12.4 of the Estate Sales Office Code ■ Park Residential Zone Code ■ Estate Sales Office Code ■ Access and Parking Code ■ Development Near Underground Infrastructure Code
Home Business	Self-Assessable If complying with the assessment criteria being the acceptable solutions listed in column 3 Code Assessable If not self-assessable	■ Acceptable Solutions in section 6.15.4 of the Home Business Code ■ Park Residential Zone Code ■ Home Business Code ■ Access and Parking Code And where being carried out in a Domestic Outbuilding - ■ Domestic Outbuilding Code ■ Development Near Underground Infrastructure Code ■ Erosion Prevention and Sediment Control Code ■ Excavation and Fill Code
Minor Utility	Exempt	
Park	Self-Assessable If - (1) Being undertaken by the local government; (2) On land in the ownership or control of the local government; (3) Complying with the assessment criteria being the acceptable solutions listed in column 3 Code Assessable If not self-assessable	■ Acceptable Solutions in section 6.20.4 of the Park Code ■ Acceptable Solutions in section 8.5.4 of the Development Near Underground Infrastructure Code ■ Park Residential Zone Code ■ Park Code ■ Access and Parking Code ■ Development Near Underground Infrastructure Code ■ Infrastructure Works Code ■ Landscape Code ■ Stormwater Management Code

Park Residential Zone - Table of Assessment for Material Change of Use of Premises

column 1	column 2	column 3
Use[4.140]	**Level of Assessment**[4.141]	**Assessment Criteria**
Relatives Apartment	Self-Assessable If complying with the assessment criteria being the acceptable solutions listed in column 3 Code Assessable If not self-assessable	■ Acceptable Solutions in section 6.21.4 of Relatives Apartment Code ■ Acceptable Solutions in section 8.5.4 of the Development Near Underground Infrastructure Code ■ Acceptable Solutions in section 8.6.4 of the Erosion Prevention and Sediment Control Code ■ Acceptable Solutions A1.(1) (a)and(c) in section 7.6.4 of the Excavation and Fill Code ■ Park Residential Zone Code ■ Relatives Apartment Code ■ Development Near Underground Infrastructure Code ■ Erosion Prevention and Sediment Control Code ■ Excavation and Fill Code ■ Stormwater Management Code
Road	Exempt	
Telecommunications Facility	Self-Assessable[4.142] If complying with the assessment criteria being the acceptable solutions listed in column 3 Otherwise - Impact Assessable	■ Acceptable Solutions in section 6.26.4 of the Telecommunications Facility Code ■ Acceptable Solutions in section 8.5.4 of the Development Near Underground Infrastructure Code ■ Acceptable Solutions in section 8.6.4 of the Erosion Prevention and Sediment Control Code ■ Acceptable Solutions A1.(1) (a)and(c) in section 7.6.4 of the Excavation and Fill Code
Utility Installation	Code Assessable	■ Park Residential Zone Code ■ Access and Parking Code ■ Development Near Underground Infrastructure Code ■ Erosion Prevention and Sediment Control Code ■ Excavation and Fill Code ■ Landscape Code ■ Stormwater Management Code
Defined uses not listed in column 1	Impact Assessable	

[4.142] If not self-assessable, a Telecommunication Facility in the Park Residential Zone is impact assessable.

Park Residential Zone - Table of Assessment for Material Change of Use of Premises

column 1	column 2	column 3
Use[4.140]	Level of Assessment[4.141]	Assessment Criteria
Defined uses listed in column 1 that do not comply with the level of assessment qualifications in column 2	Impact Assessable	
Uses not defined in Part 9 - Schedule 3 - Dictionary, Division 1 - Uses	Impact Assessable	

4.17.5 Park Residential Zone - Table of Assessment for Other Development not associated with a Material Change of Use of Premises

Park Residential Zone - Table of Assessment for Other Development

column 1	column 2	column 3
Other Development	**Level of Assessment**[4.143]	**Assessment Criteria**
Reconfiguration for -		
Creating lots by subdividing another lot by Standard Format Plan[4.144]	Code Assessable	■ Park Residential Zone Code ■ Reconfiguration Code ■ Development Near Underground Infrastructure Code ■ Excavation and Fill Code ■ Infrastructure Works Code ■ Stormwater Management Code
Creating lots by subdividing another lot by - ■ Building Format Plan; or ■ Volumetric Format Plan	Code Assessable	■ Park Residential Zone Code ■ Reconfiguration Code
■ Rearranging the boundaries of a lot by registering a plan of subdivision; or ■ Dividing land into parts by Agreement; or ■ Creating an easement giving access to a lot from a constructed road	Code Assessable	■ Reconfiguration Code
Building Work for -		
Communications Structures	Exempt If minor building work[4.145] Self-Assessable If - (1) Not exempt; (2) Complying with the assessment criteria being the acceptable solutions listed in column 3 Code Assessable If not self-assessable	■ Acceptable Solutions in section 7.2.4 of the Communications Structures Code ■ Communications Structures Code

[4.143] See Part 9 - Schedule 3 - Dictionary, Division 2 - Administrative Terms for a definition of level of assessment.
[4.144] Whether or not having a Community Management Statement.
[4.145] See Part 9 - Schedule 3 - Dictionary, Division 2 - Administrative Terms for a definition of minor building work.

Park Residential Zone - Table of Assessment for Other Development

column 1	column 2	column 3
Other Development	**Level of Assessment**[4.143]	**Assessment Criteria**
Domestic Additions	Exempt If minor building work[4.145] Self-Assessable If - (1) Not exempt; (2) Complying with the assessment criteria being the acceptable solutions listed in column 3 **Note -** Non-compliance with the acceptable solutions for self assessable development in relation to setbacks, site cover and built to boundary walls, or nominated "Alternative Provisions" or Building Assessment Provisions identified in the Domestic Additions Code will not elevate the level of assessment of a proposal from self assessable development to assessable development under the Redlands Planning Scheme. Refer to section 7.3.2 of the Domestic Additions Code. Code Assessable If - (1) Not self-assessable; (2) The building height is - (a) 8.5 metres or less above ground level; (b) 2 storey or less Otherwise - Impact Assessable	■ Acceptable Solutions in section 7.3.5 of the Domestic Additions Code ■ Acceptable Solutions in section 8.5.4 of the Development Near Underground Infrastructure Code ■ Acceptable Solutions in section 8.6.4 of the Erosion Prevention and Sediment Control Code ■ Acceptable Solutions A1.(1) (a)and(c) in section 7.6.4 of the Excavation and Fill Code ■ Park Residential Zone Code ■ Domestic Additions Code ■ Development Near Underground Infrastructure Code ■ Erosion Prevention and Sediment Control Code ■ Excavation and Fill Code ■ Infrastructure Works Code ■ Stormwater Management Code
Domestic Outbuilding	Exempt If minor building work[4.145] Self-Assessable If - (1) Not exempt; (2) Complying with the assessment criteria being the acceptable solutions listed in column 3	■ Acceptable Solutions in section 7.5.5 of the Domestic Outbuilding Code ■ Acceptable Solutions in section 8.5.4 of the Development Near Underground Infrastructure Code ■ Acceptable Solutions in section 8.6.4 of the Erosion Prevention and Sediment Control Code ■ Acceptable Solutions A1.(1)

Park Residential Zone - Table of Assessment for Other Development

column 1	column 2	column 3
Other Development	**Level of Assessment**[4.143]	**Assessment Criteria**
	Note - Non-compliance with the acceptable solutions for self assessable development in relation to setbacks, site cover and built to boundary walls, or nominated "Alternative Provisions" or Building Assessment Provisions identified in the Domestic Outbuilding Code will not elevate the level of assessment of a proposal from self assessable development to assessable development under the Redlands Planning Scheme. Refer to section 7.5.2 of the Domestic Outbuilding Code. Code Assessable If not self-assessable	(a)and(c) in section 7.6.4 of the Excavation and Fill Code ■ Park Residential Zone Code ■ Domestic Outbuilding Code ■ Development Near Underground Infrastructure Code ■ Erosion Prevention and Sediment Control Code ■ Excavation and Fill Code
On-site raising or relocation of an existing dwelling unit	Self-Assessable If complying with the assessment criteria being the acceptable solutions listed in column 3 **Note -** Non-compliance with the acceptable solutions for self assessable development in relation to setbacks, site cover and built to boundary walls, or nominated "Alternative Provisions" or Building Assessment Provisions identified in the On-site Raising or Relocation Code will not elevate the level of assessment of a proposal from self assessable development to assessable development under the Redlands Planning Scheme. Refer to section 7.7.2 of the On-site Raising or Relocation Code.	■ Acceptable Solutions in section 7.7.5 of the On-Site Raising or Relocation Code ■ Acceptable Solutions in section 8.5.4 of the Development Near Underground Infrastructure Code ■ Acceptable Solutions in section 8.6.4 of the Erosion Prevention and Sediment Control Code ■ Acceptable Solutions A1.(1) (a)and(c) in section 7.6.4 of the Excavation and Fill Code

Park Residential Zone - Table of Assessment for Other Development

column 1	column 2	column 3
Other Development	**Level of Assessment**[4.143]	**Assessment Criteria**
	Code Assessable If - (1) Not self-assessable; (2) The building height is - (a) 8.5 metres or less above ground level; (b) 2 storey or less Otherwise - Impact Assessable	■ Park Residential Zone Code ■ On-Site Raising and Relocation Code ■ Development Near Underground Infrastructure Code ■ Erosion Prevention and Sediment Control Code ■ Excavation and Fill Code ■ Infrastructure Works Code
Private Swimming Pool	Self-Assessable If complying with the assessment criteria being the acceptable solutions listed in column 3 **Note -** Non-compliance with the acceptable solutions for self assessable development in relation to setbacks, and access and parking, or nominated "Alternative Provisions" or Building Assessment Provisions identified in the Private Swimming Pool Code will not elevate the level of assessment of a proposal from self assessable development to assessable development under the Redlands Planning Scheme. Refer to section 7.8.2 of the Private Swimming Pool Code. Code Assessable If not self-assessable	■ Acceptable Solutions in section 7.8.5 of the Private Swimming Pool Code ■ Private Swimming Pool Code ■ Development Near Underground Infrastructure Code ■ Erosion Prevention and Sediment Control Code ■ Excavation and Fill Code
Private Tennis Court	Self-Assessable If complying with the assessment criteria being the acceptable solutions listed in column 3 Code Assessable If not self-assessable	■ Acceptable Solutions in section 7.9.4 of the Private Tennis Court Code ■ Private Tennis Court Code ■ Erosion Prevention and Sediment Control Code ■ Excavation and Fill Code ■ Landscape Code

Park Residential Zone - Table of Assessment for Other Development

column 1	column 2	column 3
Other Development	**Level of Assessment**[4.143]	**Assessment Criteria**
Operational Work for -		
Constructing a Domestic Driveway Crossover	Self-Assessable If complying with the assessment criteria being the acceptable solutions listed in column 3 Code Assessable If not self-assessable	■ Acceptable Solutions in section 7.4.4 of the Domestic Driveway Crossover Code ■ Domestic Driveway Crossover Code
Excavation and Fill	Exempt If - (1) Disturbing less than 50m^3 of soil; (2) A height/depth not exceeding 300mm measured from ground level Self-Assessable If - (1) Not exempt; (2) Complying with the assessment criteria being the acceptable solutions listed in column 3 Code Assessable If not self-assessable	■ Acceptable Solutions in section 8.6.4 of the Erosion Prevention and Sediment Control Code ■ Acceptable Solutions A1.(1)(a)and(c) in section 7.6.4 of the Excavation and Fill Code ■ Erosion Prevention and Sediment Control Code ■ Excavation and Fill Code
Placing an Advertising Device on Premises	Self-Assessable If complying with the assessment criteria being the acceptable solutions listed in column 3 Code Assessable If not self-assessable	■ Acceptable Solutions in section 7.1.4 of the Advertising Devices Code ■ Advertising Devices Code
Operational Work for Reconfiguring a Lot (by Standard Format Plan)	Code Assessable	■ Reconfiguration Code ■ Development Near Underground Infrastructure ■ Erosion Prevention and Sediment Control Code ■ Excavation and Fill Code ■ Infrastructure Works Code ■ Landscape Code ■ Stormwater Management Code

Park Residential Zone - Table of Assessment for Other Development

column 1	column 2	column 3
Other Development	**Level of Assessment**[4.143]	**Assessment Criteria**
Private Waterfront Structure	Code Assessable	■ Private Waterfront Structure Code ■ Development Near Underground Infrastructure Code ■ Erosion Prevention and Sediment Control Code ■ Excavation and Fill Code
All other development not listed in column 1	Exempt	

4.17.6 Compliance with Park Residential Zone Code

(1) Development that is consistent with the specific outcomes in section 4.17.8 complies with the Park Residential Zone Code.

Note -

The following planning scheme policies will assist in achieving specific outcomes within the Park Residential Zone Code -

- Planning Scheme Policy 4 - Ecological Impacts;
- Planning Scheme Policy 5 - Environmental Emissions;
- Planning Scheme Policy 9 - Infrastructure Works;
- Planning Scheme Policy 12 - Social and Economic Impact Assessment.

4.17.7 Overall Outcomes for Park Residential Zone Code

(1) The overall outcomes are the purpose of the Park Residential Zone Code.

(2) The overall outcomes sought for the Park Residential Zone Code are described by five key characteristics[4.146] **-**

(a) Uses and Other Development;
(b) Built Form and Density;
(c) Amenity;
(d) Environment;
(e) Infrastructure.

Each of these are detailed below.

(a) Uses and Other Development

(i) Provide for detached housing on individual lots that -
a. are predominantly low-rise;
b. provide for a semi-rural lifestyle in a bushland setting;
c. provide a transition between urban, rural and environmental areas of the City;
d. encourage opportunities for working from home.

(ii) Provide for a limited range of non-residential uses that -
a. fulfill a local community need, or in the case of an community, educational and recreational uses are an identified district need;
b. are compatible with the maintenance of a high standard of semi-rural bushland amenity;
c. are located on the major road network or entry points to this zone;
d. do not compromise on the role and function of centres;
e. do not result in commercial ribbon development.

(b) Built Form and Density

(i) The scale of uses and other development contributes to a detached built form by -
a. limiting building height to maintain a low-rise appearance;
b. buildings are sited and of width, depth and bulk that does not dominate the larger lot sizes in this zone;
c. non-residential uses being consistent with the preferred building types expected in the zone.

(ii) The density of uses within the zone maintains a semi-rural, bushland setting characterised by individual lots greater than 6000m^2.

(iii) Lot layout is climatically responsive.

[4.146] In combination, the overall outcomes in section 4.17.7 (2)(a)-(e) define the character of the Park Residential Zone.

(iv) Building appearance is compatible with the preservation of a semi-rural bushland setting, by -
  a. using landscaping to filter the views of buildings when viewed from the street and adjacent lots;
  b. a mix of building materials and styles that are responsive to local conditions and style.

(c) Amenity

(i) Uses and other development achieve a high standard of semi-rural bushland amenity by -
  a. protecting and enhancing of places of cultural significance;
  b. having access to natural light and ventilation, privacy and private open space commensurate with the use;
  c. contributing to a visual transition between urban and rural or bushland areas;
  d. being larger lots capable of retaining native plants;
  e. integrating with the natural landscape and bushland setting;
  f. eliminating or mitigating impacts associated with light, noise, air and traffic.

(d) Environment

(i) Uses and other development minimise adverse impacts on environmental values and scenic values by -
  a. responding to topographical features;
  b. minimising the need for excavation and fill;
  c. protecting the site from erosion and sediment run-off;
  d. incorporating best practice stormwater management and enhancing water quality;
  e. maximising retention of native plants;
  f. maximising the use of planting species that are native and characteristic to the area.

(e) Infrastructure

(i) Uses and other development -
  a. make efficient use of existing infrastructure;
  b. provide for the extension of infrastructure in an orderly and cost effective manner;
  c. do not result in unacceptable risk to community infrastructure.

(ii) Uses and other development are serviced by infrastructure including -
  a. reticulated water;
  b. reticulate sewerage; or
  c. where the site is not able to be connected to a reticulated sewerage system, on-site sewerage systems that ensure wastewater is treated and disposed of on-site subject to site, soil and locational constraints;
  d. on-site stormwater management systems;
  e. constructed road access that minimises impact on the native plants and natural drainage systems;
  f. energy;
  g. telecommunications;
  h. waste and recycling collection facilities.

(iii) Uses and other development reinforce an integrated, legible, efficient and safe movement network that -
  a. incorporates and provides a range of movement modes including public transport, passenger vehicles, walking and cycling;
  b. provides pedestrian, cycle and vehicle movement networks that maximise connectivity, permeability and ease of mobility.

4.17.8 Specific Outcomes and Probable Solutions applicable to Assessable Developm ent

Assessable Development			
Specific Outcomes		**Probable Solutions**	
	Uses -		
S1.1	Uses identified as inconsistent in Table 1 are not established in the zone.	**P1.1**	No probable solution identified.
S1.2	(1) Non-residential uses, such as local shopping, medical facilities, churches, child care centres and the like may be contemplated in appropriate locations and subject to detailed development requirements including - (a) being located on the major road network; (b) co-locating with other similar uses; (c) providing only for the identified convenience needs of the local community; (d) not impacting on the role and function of the City's network of centres; (e) resulting in positive economic and social benefits for the local community. **Note -** Refer to Part 11 - Planning Scheme Policy 12 - Social and Economic Impact Assessment.	**P1.2**	(1) Non-residential uses - (a) located on the corner of collector or higher order roads; (b) where of - (i) retail or commercial nature - a. are co-located with other similar uses; b. are 600m^2 or less gross floor area, with no one tenancy exceeding 400m^2 gross floor area; c. are not within 800 metres of any similar uses or a centre zone; (ii) community facilities, health care centres, child care centres, or uses of a similar community nature - a. are 400m^2 or less of gross floor area per use; b. are co-located with other similar uses or retail or commercial uses.
S1.3	(1) The following uses are encouraged - (a) bed and breakfast; (b) home business; (c) relatives apartment.	**1.3**	(1) No probable solution identified. **Note -** Refer to Part 6 - ■ Division 5 - Bed and Breakfast Code; ■ Division 15 - Home Business Code; ■ Division 21 - Relatives Apartment Code for assessment criteria associated with these uses.
	Built Form and Density -		
S2.1	The height of buildings and structures maintain a low-rise built form.	**P2.1**	Building height is 8.5 metres or less above ground level. **Note -** Refer to the relevant use code for specific building height assessment criteria.

Assessable Development			
Specific Outcomes		**Probable Solutions**	
S2.2	(1) All buildings, structures, car parking, accessways, service facilities, private open space, on-site waste disposal, storage, and associated tree clearing maintains a balance between the built and unbuilt areas of the premises that - (a) is consistent with the maintenance of a semi-rural bushland setting; (b) assists in retaining existing native plants;	**P2.2**	(1) All buildings, structures, car parking, accessways, storage, on-site wastewater disposal and associated clearing of vegetation covers a maximum of 30 percent of the lot, or is contained entirely within a development envelope.
S2.3	The creation of lots is compatible with the detached low-rise, semi-rural bushland setting of the zone.	**P2.3**	Reconfiguration achieves a density of not greater than 1 dwelling unit per 6000m^2.
S2.4	(1) Setbacks contribute to the maintenance of a semi-rural bushland setting and complement existing setbacks in the street.	**P2.4**	(1) Buildings and structures are setback - (a) for a lot or premises less than 2 hectares - a minimum of 10 metres from all boundaries; or (b) for a lot or premises greater than 2 hectares - (i) a minimum of 20 metres from all boundaries; or (ii) a minimum of 10 metres from all boundaries if screened by planted landscaping; or (c) where within a development envelope, the envelope is located to achieve P2.4(1)(a) or (b)(i) as appropriate.
S2.5	(1) Building design incorporates architectural elements that - (a) exhibit a high degree of interest through the use of colour, angles, materials and shadows; (b) integrate with landscape planting and with the prevailing landscape features and native plants; (c) promote an attractive semi-rural bushland streetscape; (d) provide interesting, functional and attractive facades that contribute to the semi-rural bushland setting; (e) minimise any adverse overshadowing and reflective impacts; (f) are articulated to minimise appearance of building bulk and size.	**P2.5**	(1) No probable solution identified. **Note -** For residential uses, refer to the relevant use code for specific built form assessment criteria.

Assessable Development			
Specific Outcomes		**Probable Solutions**	
S2.6	(1) Reconfiguration results in pleasant environments and reduced energy consumption through being climatically responsive by - (a) lots being orientated and of a length and width to - (i) maximise solar access to the north in winter; (ii) minimise solar access to the east and west in summer; (b) having regard to the topography of the land.	**P2.6**	(1) No probable solution identified. **Note -** Refer to the relevant use code or Part 7 - Division 11 - Reconfiguration Code for specific climate response assessment criteria.
S2.7	(1) Fencing does not inhibit the movement of native animals - (a) within the lot or premises; (b) to external areas.	**P2.7**	(1) No probable solution identified. **Note -** Refer to Part 11 - Planning Scheme Policy 4 - Ecological Impacts for specific fauna friendly fencing criteria.
	Amenity -		
S3.1	Development within the zone does not impact adversely on the cultural heritage values of a registered heritage place(s).	**P3.1**	No probable solution identified.
S3.2	Maximise retention of native plants within the lot or premises, specifically native mature trees and groups of trees.	**P3.2**	No probable solution identified.
S3.3	(1) Artificial light does not result in unreasonable disturbance to any person or activity; (2) Glare and reflection from the sun is minimised through materials and glazing.	**P3.3**	(1) The vertical illumination resulting from direct, reflected or other incidental light emanating from the premises does not exceed 8 lux when measured at any point 1.5 metres outside the boundary at or above ground level; (2) No probable solution identified.
S3.4	(1) Noise generated by the use or other development is compatible with that experienced in a semi-rural bushland environment.	**P3.4**	(1) The use does not generate noise, measured as the $L_{Amax,adj,T}$ parameter, at the boundary of the lot or premises, which is greater than - (a) 5dB(A) above the background noise level between 7am to 10pm; or (b) 3dB(A) above the background noise level between 10pm to 7am. **Note -** The $L_{Amax,adj,T}$ parameter is defined in the *Noise Measurement Manual* (Environmental Protection Agency,

Assessable Development			
Specific Outcomes		**Probable Solutions**	
			2000).
S3.5	Air quality impacts are eliminated or mitigated to a level that is compatible with a semi-rural bushland environment by not emitting vibration, odour, fumes, smoke, vapour, steam, soot, ash, dust, grit, oil, radio or electrical interference beyond the premises.	**P3.5**	No probable solution identified. **Note -** Refer to Part 11 - Planning Scheme Policy 5 - Environmental Emissions for further information on noise and air quality impacts.
S3.6	(1) Traffic movements are compatible with that experienced in a semi-rural bushland environment.	**P3.6**	(1) Non-residential uses for commercial/ retail, community facilities and services, or similar are - (a) located on collector or higher order roads; (b) do not gain access through local roads.
	Environment -		
S4.1	(1) Uses and other development protect environmental values from external impacts associated with - (a) stormwater run-off; (b) water quality; (c) erosion and sediment run-off; (d) weed infestation.	**P4.1**	(1) No probable solution identified.
S4.2	(1) Minimise the need for excavation and fill, by uses and other development being located and designed to - (a) prevent the unnecessary removal of native plants; (b) maintain and protect natural overland drainage systems; (c) protect the amenity of adjoining properties; (d) reduce erosion and sediment run-off.	**P4.2**	(1) No probable solution identified. **Note -** Refer to Part 7 - Division 6 - Excavation and Fill Code for assessment criteria where the premises require earthworks.
S4.3	(1) Landscaping - (a) incorporates plant species that are native to the local area; (b) recognises and enhances the landscape character of the local area; (c) supports the retention and rehabilitation of enhancement areas and corridors; (2) Landscaping is included as a component of the stormwater management system; (3) Accessways and other unplanted, landscaped areas maximise stormwater infiltration through the use of permeable surfaces.	**P4.3**	(1) Species used for landscaping - (a) within lots are selected from the native species listed in Part 9 -Schedule 10 - Vegetation Species List; (b) within the road reserve are selected from the native species in Part 9 - Schedule 9 - Street Trees; (2) No probable solution identified; (3) No probable solution identified. **Note -** For additional assessment criteria refer to Part 8 - ■ Division 8 - Landscape Code;

Assessable Development			
Specific Outcomes		**Probable Solutions**	
			■ Division 9 - Stormwater Management Code.
	Infrastructure -		
S5.1	Infrastructure is provided in an orderly and cost effective manner that meets the nominated level of service for the zone and minimises adverse impacts on the natural environment.	**P5.1**	No probable solution identified.
S5.2	(1) Uses and other development are serviced by infrastructure including - (a) reticulated water; (b) a reticulated sewerage; or (c) where not able to be connected to a reticulated sewerage system, wastewater - (i) is treated and disposed of on-site subject to site, soil and locational constraints; (ii) reduces the potential for - a. contaminating groundwater, surface water or wetland environments; b. risks to reticulated water supply and public health; (d) stormwater management systems that - (i) utilise natural overland systems; (ii) incorporate measures to reduce stormwater quantity and improve stormwater quality; (e) constructed road access that minimises removal of native plants and the concentration of stormwater run-off; (f) energy; (g) telecommunications; (h) waste and recycling collection facilities.	**P5.2**	(1) No probable solution identified. **Note -** ■ Refer to Part 8 - Division 7 - Infrastructure Works Code for further information on provision, design and construction of utility infrastructure, roads and pedestrian and cycle paths; ■ Where creating new lots refer to Part 7 - Division 11 - Reconfiguration Code.
S5.3	(1) Waste and recycling is managed to minimise impacts on the environment by - (a) locating waste and recycling storage areas to protect amenity and to provide safe manual handling of containers; (b) screening waste and recycling container storage areas from view; (c) providing for the cleansing of containers in a manner that	**P5.3**	(1) No probable solution identified. **Note -** Refer to Part 11 - Planning Scheme Policy 9 - Infrastructure Works – Chapter 16 – Waste Management for further information on waste and recycling container volume, storage, servicing, screening and cleansing.

Assessable Development			
Specific Outcomes		**Probable Solutions**	
	does not cause adverse environmental impacts.		
S5.4	Uses and other development maximise opportunities to provide and upgrade cycle paths.	**P5.4**	No probable solution identified. **Note -** Refer to Part 8 - Division 7 - Infrastructure Works Code for further information on provision, design and construction of utility infrastructure, roads and pedestrian and cycle paths.
S5.5	Community infrastructure is able to function effectively during and immediately after flood events.	**P5.5**	Community infrastructure is located at or above the recommended flood levels in Table 2 - Recommended Flood Levels for Community Infrastructure.

Table 1 - Inconsistent Uses

Inconsistent Uses
Agriculture
Airport
Apartment Building
Brothel
Bulky Goods Showroom
Car Wash Facility
Cemetery
Commercial Office - where having more than 400m^2 gross floor area.
Display and Sale Activity
Drive Through Restaurant
Dual Occupancy
Extractive Industry
Forestry
Funeral Parlour
Garden Centre
General Industry
Heavy Industry
High Impact Industry
Hotel
Intensive Agriculture
Landscape Supply Depot
Marine Services
Mobile Home Park
Multiple Dwelling
Night Club
Outdoor Dining
Passenger Terminal
Produce Store
Refreshment Establishment - where having more than 400m^2 gross floor area
Retail Warehouse
Roadside Stall
Rural Enterprise
Service Industry
Service Station
Shop - where having more than 400m^2 gross floor area
Small Lot House
Temporary Use
Tourist Park
Vehicle Depot

Inconsistent Uses
Vehicle Parking Station
Vehicle Repair Premises
Warehouse

Table 2 - Recommended Flood Levels for Community Infrastructure

Type of Community Infrastructure	Recommended Flood Level AEP (ARI)
Emergency services, other than police facilities	0.2% (1 in 500 year ARI)
Emergency shelters	0.5% (1 in 200 year ARI)
Police facilities	0.5% (1 in 200 year ARI)
Hospitals and associated facilities	0.2% (1 in 500 year ARI)
Stores of valuable records or items of historic or cultural significance such as galleries and libraries	0.5% (1 in 200 year ARI)
Power stations	0.2% (1 in 500 year ARI)
Major switch yards	0.2% (1 in 500 year ARI)
Substations	0.5% (1 in 200 year ARI)
Sewerage treatment plants	1% (1 in 100 year ARI)
Water treatment plants	0.5% (1 in 200 year ARI)
■ State-controlled roads ■ Works of an electricity entity not otherwise listed in this table ■ Railway lines, stations and associated facilities ■ Aviation facilities ■ Communication network facilities	No specific recommended flood level but development proponents should ensure that the infrastructure is optimally located and designed to achieve suitable levels of service, having regard to the processes and policies of the administering government agency.

Reference - *State Planning Policy Guideline 1/03: Mitigating the Adverse Impacts of Flood, Bushfire and Landslide*.

this page purposely
left blank

Division 18 - Point Lookout Centre Zone

4.18.1 Introduction

(1) This division contains the provisions for the Point Lookout Centre Zone. They are -

(a) The Point Lookout Centre Zone Tables of Assessment, that incorporates -
- (i) Levels of assessment for development in the Point Lookout Centre Zone (section 4.18.2);
- (ii) Assessment criteria for development in the Point Lookout Centre Zone (section 4.18.3);
- (iii) Point Lookout Centre Zone - Table of Assessment for Material Change of Use of Premises (section 4.18.4);
- (iv) Point Lookout Centre Zone - Table of Assessment for Other Development not associated with a Material Change of Use of Premises (section 4.18.5).

(b) The Point Lookout Centre Zone Code, that incorporates -
- (i) Compliance with the Point Lookout Centre Zone Code (section 4.18.6);
- (ii) Overall Outcomes for the Point Lookout Centre Zone Code (section 4.18.7);
- (iii) Specific Outcomes and Probable Solutions applicable to Assessable Development (section 4.18.8).

4.18.2 Levels of assessment for development in the Point Lookout Centre Zone

(1) Sections 4.18.4 and 4.18.5 identify the level of assessment for development in the Point Lookout Centre Zone, as follows -

(a) section 4.18.4 Point Lookout Centre Zone - Table of Assessment for Making a Material Change of Use of Premises[4.147] -
- (i) column 1 identifies uses that are exempt, self-assessable or assessable;
- (ii) column 2 identifies the level of assessment for the uses listed in column 1;
- (iii) the use is impact assessable where -
  - a. it is defined in Part 9 - Schedule 3 - Dictionary, Division 1 - Uses and is not listed in column 1; or
  - b. it is listed in column 1 and does not comply with the level of assessment qualifications listed in column 2; or
  - c. it is not defined in Part 9 - Schedule 3 - Dictionary, Division 1 - Uses.

(b) section 4.18.5 Point Lookout Centre Zone - Table of Assessment for Other Development not associated with a Material Change of Use of Premises -
- (i) column 1 identifies other development that is exempt, self-assessable or assessable;
- (ii) column 2 identifies the level of assessment for other development listed in column 1;
- (iii) where the other development is not listed in column 1 it is exempt.

(2) Overlays may alter the level of assessment identified in (1)(a) and (b)[4.148].

[4.147] Works associated with an application for a material change of use of premises may be assessed together with the material change of use.

[4.148] Refer to Part 5 - Overlays to determine the level of assessment for the use or other development where an Overlay affects the lot and Part 1, section 1.2.5(10)(f) that explains how the highest level of assessment applies

4.18.3 Assessment criteria for development in the Point Lookout Centre Zone

(1) Development in the Point Lookout Centre Zone is assessed against the assessment criteria listed in column 3 of sections 4.18.4 and 4.18.5, as follows -

(a) acceptable solutions of applicable codes for self-assessable development; or

(b) applicable codes for code assessable development.

(2) Self-assessable development that does not comply with all the acceptable solutions of the applicable codes is assessable development.

(3) Impact assessable development will be assessed against all relevant provisions of the Redlands Planning Scheme.

Note -

- The level of assessment indicated within section 4.18.4 - Point Lookout Centre Zone - Table of Assessment for Material Change of Use of Premises may be affected by Division 2 of the Regulatory Provisions of the *SEQ Regional Plan 2005 - 2026.*
- The level of assessment for reconfiguration as indicated within section 4.18.5 - Point Lookout Centre Zone - Table of Assessment for Other Development not associated with a Material Change of Use of Premises, where within the Regional Landscape and Rural Production Area or Investigation Area of the *SEQ Regional Plan 2005 - 2026* -
  - complies with Division 3 of the Regulatory Provisions;
  - has a minimum lot size of 100 hectares, unless the subdivision meets an exclusion documented in Division 3.

4.18.4 Point Lookout Centre Zone - Table of Assessment for Material Change of Use of Premises

Point Lookout Centre Zone - Table of Assessment for Material Change of Use of Premises

column 1	column 2	column 3
Use[4.149]	**Level of Assessment**[4.150]	**Assessment Criteria**
Caretakers Dwelling	Code Assessable	■ Point Lookout Centre Zone Code ■ Caretakers Dwelling Code
Commercial Office	Self-Assessable If complying with the assessment criteria being the acceptable solutions listed in column 3 Code Assessable If not self-assessable	■ Acceptable Solutions in section 8.2.4 of the of the Centre Activity Code ■ Point Lookout Centre Zone Code ■ Access and Parking Code ■ Development Near Underground Infrastructure Code ■ Erosion Prevention and Sediment Control Code ■ Excavation and Fill Code ■ Infrastructure Works Code ■ Landscape Code ■ Stormwater Management Code
Community Facility	Code Assessable	■ Point Lookout Centre Zone Code ■ Access and Parking Code ■ Development Near Underground Infrastructure Code ■ Erosion Prevention and Sediment Control Code ■ Excavation and Fill Code ■ Infrastructure Works Code ■ Landscape Code ■ Stormwater Management Code
Emergency Services	Code Assessable	■ Point Lookout Centre Zone Code ■ Access and Parking Code ■ Development Near Underground Infrastructure Code ■ Erosion Prevention and Sediment Control Code ■ Excavation and Fill Code ■ Infrastructure Works Code ■ Landscape Code ■ Stormwater Management Code
Health Care Centre	Self-Assessable If complying with the assessment criteria being the acceptable solutions listed in column 3	■ Acceptable Solutions in section 8.2.4 of the of the Centre Activity Code

[4.149] See Part 9 - Schedule 3 - Dictionary, Division 1 - Uses.
[4.150] See Part 9 - Schedule 3 - Dictionary, Division 2 - Administrative Terms for a definition of level of assessment.

Point Lookout Centre Zone - Table of Assessment for Material Change of Use of Premises

column 1	column 2	column 3
Use[4.149]	**Level of Assessment**[4.150]	**Assessment Criteria**
	Code Assessable If not self-assessable	■ Point Lookout Centre Zone Code ■ Access and Parking Code ■ Development Near Underground Infrastructure Code ■ Erosion Prevention and Sediment Control Code ■ Excavation and Fill Code ■ Infrastructure Works Code ■ Landscape Code ■ Stormwater Management Code
Home Business	Self Assessable If complying with the assessment criteria being the acceptable solutions listed in column 3 Code Assessable If - (1) Not self-assessable; (2) Within a dwelling unit approved under this planning scheme	■ Acceptable Solutions in section 6.15.4 of the Home Business Code ■ Point Lookout Centre Zone Code ■ Home Business Code
Indoor Recreation Facility	Code Assessable	■ Point Lookout Centre Zone Code ■ Access and Parking Code ■ Development Near Underground Infrastructure Code ■ Erosion Prevention and Sediment Control Code ■ Excavation and Fill Code ■ Infrastructure Works Code ■ Landscape Code ■ Stormwater Management Code
Minor Utility	Exempt	
Outdoor Dining	Code Assessable	■ Point Lookout Centre Code ■ Outdoor Dining Code
Park	Self-Assessable If - (1) Being undertaken by the local government; (2) On land in the ownership or control of the local government; (3) Complying with the assessment criteria being the acceptable solutions listed in column 3	■ Acceptable Solutions in section 6.20.4 of the Park Code ■ Acceptable Solutions of section 8.5.4 of the Development Near Underground Infrastructure Code

Point Lookout Centre Zone - Table of Assessment for Material Change of Use of Premises

column 1	column 2	column 3
Use[4.149]	**Level of Assessment**[4.150]	**Assessment Criteria**
	Code Assessable If not self-assessable	■ Point Lookout Centre Zone Code ■ Park Code ■ Access and Parking Code ■ Development Near Underground Infrastructure Code ■ Infrastructure Works Code ■ Landscape Code ■ Stormwater Management Code
Refreshment Establishment	Code Assessable If having a gross floor area less than 200m^2 Otherwise - Impact Assessable	■ Point Lookout Centre Zone Code ■ Access and Parking Code ■ Development Near Underground Infrastructure Code ■ Erosion Prevention and Sediment Control Code ■ Excavation and Fill Code ■ Infrastructure Works Code ■ Landscape Code ■ Stormwater Management Code
Road	Exempt	
Shop	Self-Assessable If complying with the assessment criteria being the acceptable solutions listed in column 3 Code Assessable If not self-assessable	■ Acceptable Solutions in section 8.2.4 Centre Activity Code ■ Point Lookout Centre Zone Code ■ Development Near Underground Infrastructure Code ■ Erosion Prevention and Sediment Control Code ■ Excavation and Fill Code ■ Infrastructure Works Code ■ Landscape Code ■ Stormwater Management Code
Telecommunications Facility	Self-Assessable If complying with the assessment criteria being the acceptable solutions listed in column 3 Code Assessable If not self-assessable	■ Acceptable Solutions in section 6.26.4 of the Telecommunications Facility Code ■ Acceptable Solutions in section 8.5.4 of the Development Near Underground Infrastructure Code ■ Acceptable Solutions in section 8.6.4 of the Erosion Prevention and Sediment Control Code ■ Acceptable Solutions A1.(1)(a) and (c) in section 7.6.4 of the Excavation and Fill Code ■ Point Lookout Centre Zone Code ■ Telecommunications Facility Code ■ Access and Parking Code ■ Development Near Underground

Point Lookout Centre Zone - Table of Assessment for Material Change of Use of Premises

column 1	column 2	column 3
Use[4.149]	**Level of Assessment**[4.150]	**Assessment Criteria**
		Infrastructure Code ■ Erosion Prevention and Sediment Control Code ■ Excavation and Fill Code ■ Infrastructure Works Code
Temporary Use	Self-Assessable If complying with the assessment criteria being the acceptable solutions listed in column 3 Code Assessable If not self-assessable	■ Acceptable Solutions in section 6.27.4 of the Temporary Use Code ■ Point Lookout Centre Zone Code ■ Temporary Use Code
Tourist Accommodation	Code Assessable If - (1) The building height does not exceed 9 metres; (2) Site coverage does not exceed 65 percent; (3) The use is undertaken as part of a mixed use development Otherwise - Impact Assessable	■ Point Lookout Centre Zone Code ■ Tourist Accommodation Code ■ Access and Parking Code ■ Development Near Underground Infrastructure Code ■ Erosion Prevention and Sediment Control Code ■ Excavation and Fill Code ■ Infrastructure Works Code ■ Landscape Code ■ Stormwater Management Code
Utility Installation	Code Assessable	■ Point Lookout Centre Zone Code ■ Access and Parking Code ■ Development Near Underground Infrastructure Code ■ Erosion Prevention and Sediment Control Code ■ Excavation and Fill Code ■ Landscape Code ■ Stormwater Management Code
Veterinary Surgery	Code Assessable	■ Point Lookout Centre Zone Code ■ Access and Parking Code ■ Development Near Underground Infrastructure Code ■ Erosion Prevention and Sediment Control Code ■ Excavation and Fill Code ■ Infrastructure Works Code ■ Landscape Code ■ Stormwater Management Code
Defined uses not listed in column 1	Impact Assessable	

Point Lookout Centre Zone - Table of Assessment for Material Change of Use of Premises

column 1	column 2	column 3
Use[4.149]	Level of Assessment[4.150]	Assessment Criteria
Defined uses listed in column 1 that do not comply with the level of assessment qualifications in column 2	Impact Assessable	
Uses not defined in Part 9 - Schedule 3 - Dictionary, Division 1 - Uses	Impact Assessable	

4.18.5 Point Lookout Centre Zone - Table of Assessment for Other Development not associated with a Material Change of Use of Premises

Point Lookout Centre Zone - Table of Assessment for Other Development

column 1	column 2	column 3
Other Development	**Level of Assessment**	**Assessment Criteria**
Reconfiguration for -		
Creating lots by subdividing another lot by Standard Format Plan[4.151]	Code Assessable	■ Point Lookout Centre Zone Code ■ Reconfiguration Code ■ Development Near Underground Infrastructure Code ■ Excavation and Fill Code ■ Infrastructure Works Code ■ Stormwater Management Code
Creating lots by subdividing another lot by - ■ Building Format Plan; or ■ Volumetric Format Plan	Code Assessable	■ Point Lookout Centre Zone Code ■ Reconfiguration Code
■ Rearranging the boundaries of a lot by registering a plan of subdivision; or ■ Dividing land into parts by Agreement; or ■ Creating an easement giving access to a lot from a constructed road	Code Assessable	■ Reconfiguration Code
Building Work for -		
Communications Structures	Exempt If minor building work[4.152] Self-Assessable If - (1) Not exempt; (2) Complying with the assessment criteria being the acceptable solutions listed in column 3 Code Assessable If not self-assessable	■ Acceptable Solutions in section 7.2.4 of the Communications Structures ■ Communications Structures

[4.151] Whether or not having a Community Management Statement.
[4.152] See Part 9 - Schedule 3 - Dictionary, Division 2 - Administrative Terms for a definition of minor building work

Point Lookout Centre Zone - Table of Assessment for Other Development

column 1	column 2	column 3
Other Development	**Level of Assessment**	**Assessment Criteria**
Domestic Additions	Exempt If minor building work[4.152] Code Assessable If not exempt	■ Point Lookout Centre Zone Code ■ Domestic Additions Code ■ Development Near Underground Infrastructure Code ■ Erosion Prevention and Sediment Control Code ■ Excavation and Fill Code ■ Infrastructure Works Code ■ Stormwater Management Code
Domestic Outbuilding	Exempt If minor building work[4.152] Code Assessable If not exempt	■ Point Lookout Centre Zone Code ■ Domestic Outbuilding Code ■ Development Near Underground Infrastructure Code ■ Erosion Prevention and Sediment Control Code ■ Excavation and Fill Code
On-site raising or relocation of an existing dwelling unit	Code Assessable	■ Point Lookout Centre Zone Code ■ On-Site Raising and Relocation Code ■ Development Near Underground Infrastructure Code ■ Erosion Prevention and Sediment Control Code ■ Excavation and Fill Code ■ Infrastructure Works Code ■ Stormwater Management Code
Private Swimming Pool	Code Assessable	■ Point Lookout Centre Zone Code ■ Private Swimming Pool Code ■ Development Near Underground Infrastructure Code ■ Erosion Prevention and Sediment Control Code ■ Excavation and Fill Code
Private Tennis Court	Code Assessable	■ Point Lookout Centre Zone Code ■ Private Tennis Court Code ■ Erosion Prevention and Sediment Control Code ■ Excavation and Fill Code ■ Landscape Code

Point Lookout Centre Zone - Table of Assessment for Other Development

column 1	column 2	column 3
Other Development	**Level of Assessment**	**Assessment Criteria**
Operational Work for -		
Constructing a Domestic Driveway Crossover	Self-Assessable If complying with the assessment criteria being the acceptable solutions listed in column 3 Code Assessable If not self-assessable	■ Acceptable Solutions in section 7.4.4 of the Domestic Driveway Crossover Code ■ Domestic Driveway Crossover Code
Excavation and Fill	Exempt If - (1) Disturbing less than $50m^3$ of soil; (2) A height/depth not exceeding 300mm measured from ground level Self-Assessable If - (1) Not exempt; (2) Complying with the assessment criteria being the acceptable solutions listed in column 3 Code Assessable If not self-assessable	■ Acceptable Solutions in section 8.6.4 of the Erosion Prevention and Sediment Control Code ■ Acceptable Solutions A1.(1)(b),(c),(d) in section 7.6.4 of the Excavation and Fill Code ■ Erosion Prevention and Sediment Control Code ■ Excavation and Fill Code
Placing an Advertising Device on Premises	Self-assessable If complying with the assessment criteria being the acceptable solutions listed in column 3 Code Assessable If not self-assessable	■ Acceptable Solutions in section 7.1.4 of the Advertising Devices Code ■ Advertising Devices Code
Operational Work for Reconfiguring a Lot (by Standard Format Plan)	Code Assessable	■ Reconfiguration Code ■ Development Near Underground Infrastructure Code ■ Erosion Prevention and Sediment Control Code ■ Excavation and Fill Code ■ Infrastructure Works Code ■ Landscape Code ■ Stormwater Management Code
All other development not listed in column 1	Exempt	

4.18.6 Compliance with Point Lookout Centre Zone Code

(1) Development that is consistent with the specific outcomes in section 4.18.7 complies with the Point Lookout Centre Zone Code.

Note -

The following planning scheme policies will assist in achieving Specific Outcomes within the Point Lookout Centre Zone Code -

- Planning Scheme Policy 5 - Environmental Emissions;
- Planning Scheme Policy 9 - Infrastructure Works;
- Planning Scheme Policy 12 - Social and Economic Impact.

4.18.7 Overall Outcomes for Point Lookout Centre Zone Code

(1) The overall outcomes are the purpose of the Point Lookout Centre Zone Code.

(2) The overall outcomes sought for the Point Lookout Centre Zone Code are described by five key characteristics[4.153] -

(a) Uses and Other Development;
(b) Built Form and Density;
(c) Amenity;
(d) Environment;
(e) Infrastructure.

Each of these is detailed below.

(a) Uses and Other Development

(i) Provide for a range of centre uses that enhance the primacy, vitality and vibrancy of centres that -
a. fulfill a mixed use function, including retail and commercial uses, in a coastal village environment;
b. cater for the needs of visitors and the local community;
c. provide a focus for local community interaction and activity;
d. ensure active street frontages at ground level;
e. incorporate residential and tourist accommodation uses where part of a mixed use development;
f. provide for local employment opportunities;
g. are conveniently accessed by all transport modes including a focus on pedestrian and cycle paths within the Point Lookout Township.

(ii) Reconfiguration does not diminish the important role this zone plays in providing the opportunity to establish a mixed use centre.

(b) Built Form and Density

(i) The size, height and bulk of uses and other development achieve a high standard of built form and urban design that -
a. reinforce the 'sense of place' established by this unique coastal island location;
b. maintain a development appearance consistent with adjoining zones and is designed to take advantage of views;
c. provide sufficient space for landscaping, retention or reinstatement of native plants, provision of service functions and car parking and generous public footpaths;
d. encourage buildings that minimise disturbance of the natural ground form and promote permeability of storm water;
e. limit the impact of overshadowing on public places and adjoining residential zones;

[4.153] In combination, the overall outcomes in section 4.12.5 (2)(a)-(e) define the character of the Point Lookout Centre Zone.

f. contribute to an attractive streetscape along all road frontages by reinforcing the holiday nature and village atmosphere of Point Lookout in a manner which is influenced by the earlier built form.

(ii) The density of uses and other development -
a. does not overwhelm or dominate the centre, adjacent zones or the landscape;
b. maximises the coherent and efficient use of land in a manner which is sympathetic to the earlier built form;
c. provides areas for public open space, landscaping and streetscape works.

(iii) Building elements and architectural style reflect the distinctive coastal island village built environment influenced by earlier built form.

(c) Amenity

(i) Uses and other development achieves a high standard of amenity by -
a. ensuring business, commercial and convenience service activities provide high levels of physical and visual interaction and pedestrian access at street level;
b. ensuring car parking areas are discretely located and do not visually dominate the Point Lookout centre;
c. protecting and enhancing places of cultural significance or streetscape values by maintaining the scale and character of streetscape, commensurate with an appropriate intensity of viable commercial development while reinforcing native vegetation as the significant streetscape experience of Point Lookout;
d. ensuring development is compatible with the maintenance of a high standard of the centre amenity;
e. providing public places, including both private land and public road reserves, that allow for outdoor dining and other forms of social interaction;
f. providing a high quality landscape for the streetscape setting that complements the Point Lookout Centre.

(ii) Uses and other development maintain the safety of people and property by -
a. designing buildings in accordance with crime prevention principles;
b. ensuring residential and tourist uses, where incorporated as part of a mixed-use development, have access to natural light and ventilation, privacy and private and communal open space;
c. mitigating impacts associated with light, noise, air and traffic.

(d) Environment

(i) Uses and other development minimise adverse impacts on environmental, coastal and scenic values by -
a. responding to topographical features;
b. limiting the need for excavation and fill;
c. protecting the site from erosion;
d. maximising the preservation and enhancement of native plants;
e. maximising the use of plant species that are native and characteristic to Point Lookout;
f. incorporating best practice stormwater management and enhancing water quality by maximising the permeability of the sand based island;
g. in George Nothling Drive - land is not released until an environmental impact statement is undertaken.

(e) Infrastructure

(i) Uses and other development -
a. makes efficient use of existing infrastructure;
b. provide for the extension of infrastructure in an orderly and cost effective manner;
c. does not result in unacceptable risk to community infrastructure.

(ii) Uses and other development are serviced by infrastructure including -
   a. reticulated water;
   b. reticulated sewerage; or
   c. where the site is not connected or able to be connected to a reticulated sewerage system, wastewater is treated and disposed of on-site subject to site, soil and locational constraints;
   d. stormwater drainage that maximises the permeability of the sand island;
   e. low-impact road systems that minimise impact on native plants and natural drainage systems;
   f. energy;
   g. telecommunications;
   h. waste and recycling.

(iii) Uses and other development reinforce an integrated, legible, efficient and safe movement network that -
   a. incorporates a range of movement modes including public transport, vehicles, walking and cycling;
   b. provides pedestrian, cycle and vehicle movement networks that maximises connectivity, permeability and ease of mobility within the centre and with the surrounding area and public transport stops;
   c. minimises conflicts between traffic using the centre, local residential traffic, pedestrians and cyclists;
   d. maximises opportunities for the provision of pedestrian and cycle paths and reinforces pedestrian and cyclist movement as the dominant modes of travel and encourages public transport to the centre and adjoining areas.

4.18.8 Specific Outcomes and Probable Solutions applicable to Assessable Development

Assessable Development			
Specific Outcomes		**Probable Solutions**	
	Uses and Other Development -		
S1.1	Uses identified as inconsistent in Table 1 are not established in the zone.	**P1.1**	No probable solution identified.
S1.2	Uses fulfill a traditional village centre role catering for the needs of visitors and the local community.	**P1.2**	No probable solution identified.
S1.3	Residential and tourist accommodation uses are designed and integrated as part of a mixed use development ensuring the maintenance of active street frontages at ground level.	**P1.3**	No probable solution identified.
S1.4	Reconfiguration by standard format plan maintains or enlarges existing lot sizes through amalgamation to facilitate a range of centre uses.	**P1.4**	No probable solution identified.
	Built Form and Density -		
S2.1	(1) Buildings and structures - (a) adopt a built form that ensures a high quality appearance and does not dominate the landscape; (b) have a maximum height of 9 metres above ground level; (c) do not exceed 6 metres above ground level at the top floor slab of the highest habitable room or commercial floor, whichever is applicable; (d) including roofs and pergolas that are - (i) a maximum of 10 metres above ground level; (ii) no more than 10m^2 in area for each detached building; (iii) unenclosed on all sides.	**P2.1**	(1) No probable solution identified.
S2.2	(1) Site coverage – (a) is consistent with the built form, grain and scale established by the earlier built form of Point Lookout; (b) does not exceed 65 percent.	**P2.2**	(1) No probable solution identified.
S2.3	(1) Building setbacks are consistent with the low key built form at Point Lookout and - (a) allow for the retention and reinstatement of native	**P2.3**	(1) Setbacks are - (a) 3 metres from the street boundary. Awnings and/or verandahs are required in the 3 metre setback zone to

Assessable Development			
Specific Outcomes		**Probable Solutions**	
	plants; (b) ensure front setbacks are consistent with the desired streetscape for that part of the centre; (c) provide a generous pedestrian environment; (d) provide sufficient area for landscaping and streetscape treatments; (e) provide space for service functions such as car parking; (f) control building massing; (2) Where adjoining the Point Lookout Tourist and Residential Zones front, side and rear setbacks - (a) maintain privacy, breezes and solar access to adjoining zones; (b) allow landscaping that will ensure a significant level of screening between the centre and adjoining zone.		provide all-weather coverage; (b) 6 metres from the rear boundary. Unenclosed verandahs may extend to 3 metres provided a 2 metre landscaped buffer is established along the rear boundary where this occurs. Buffer landscaping to be of sufficient height to ensure the privacy of the uses conducted on the adjoining property. (2) No probable solution identified. **Note -** Refer to Diagram 1 - Building setbacks and Diagram 2 - Buildings which address the street.
S2.4	For residential and tourist uses, density is determined through site coverage, setbacks and building height criteria, to ensure residents and tourists can reside or be accommodated in proximity to services, facilities, attractions and employment opportunities in the centre.	**P2.4**	No probable solution identified.
S2.5	(1) Building design and layout is sympathetic to the natural setting and built environment established by the earlier built form of Point Lookout by - (a) incorporation of open frame architecture including verandahs, decks and awnings; (b) integrating with landscape planting and prevailing landscape features; (c) resulting in functional and attractive facades that maintain the established built form of the locality that contributes to a high quality streetscape along all road frontages; (d) main entrances and windows that address the street frontage; (e) covered pedestrian walkways that use street verandahs or	**S2.5**	(1) Architectural elements include - (a) a built form that incorporates the use of sheet material finishes such as timber and fibre cement, for external cladding; (b) minimising building construction that is purely masonry with - (i) all masonry walls rendered and painted; or (ii) where constructed of island stone may be left in their natural state; (c) roofing - (i) that is of sheet materials; (ii) is of a colour that is not reflective, glare producing or visually obtrusive. **Note -** Refer to Schedule 7 - Roof Colour Chart.

Assessable Development			
Specific Outcomes		**Probable Solutions**	
	awnings; (f) building appearance incorporating architectural elements that are responsive to the natural environment setting and centre development form of Point Lookout.		
	Amenity -		
S3.1	(1) Uses and other development establish an active interface with adjoining pedestrian spaces by - (a) ensuring active street frontages at ground level; (b) providing outdoor dining or window display areas that are orientated to the street; (c) providing physical connections and linkages between buildings, and between buildings and public places, to encourage pedestrian movement within the centre precinct; (d) locating on-site car parking and service bays behind buildings to minimise their visual and physical intrusion on the streetscape.	**P3.1**	(1) No probable solutions identified.
S3.2	(1) Uses and other development are designed in accordance with the principles of Crime Prevention through Environmental Design (CPTED) to assist in crime prevention by being - (a) orientated towards the street to provide opportunities for casual surveillance of public places; (b) designed and well lit to ensure casual surveillance of car parking areas, and pedestrian and cycle paths.	**P3.2**	(1) No probable solutions identified.
S3.3	High quality landscaping and streetscape treatments are incorporated to reinforce a sense of place and contribute to the overall attractiveness and function of the centre.	**P3.3**	No probable solution identified. **Note -** Refer to *Point Lookout Streetscape Design Guidelines* to assist in achieving S3.3.
S3.4	(1) Uses and other development maintains a high standard of centre amenity by - (a) locating air conditioning units and/or refrigeration units so	**S3.4**	(1) No probable solution identified.

Assessable Development			
Specific Outcomes		**Probable Solutions**	
	that they are not visually obtrusive and do not cause adverse visual or noise impacts on adjoining premises; (b) locating car parking and servicing areas to minimise impacts on adjoining premises and the streetscape.		
S3.5	Uses and other development do not adversely impact on the cultural heritage values of a registered heritage place(s) or character precinct.	**P3.5**	No probable solution identified.
S3.6	(1) Residential and tourist accommodation uses maximise privacy (visual and acoustic) through- (a) locating habitable room windows so they do not directly overlook habitable rooms of adjacent uses, either within or adjoining the use; (b) separating noise generating areas from sleeping areas.	**P3.6**	(1) No probable solution identified. **Note -** Refer to relevant use code for privacy assessment criteria.
S3.7	(1) Residential and tourist accommodation uses ensure private and communal open space areas are - (a) clearly defined for their intended use and user; (b) easily accessible from living or common areas; (c) useable in size and dimension; (d) of a suitable slope; (e) capable of receiving solar access.	**P3.7**	(1) No probable solution identified **Note -** For additional assessment criteria for open space requirements refer to the relevant use code.
S3.8	(1) Artificial lighting does not result in unreasonable disturbance to any person or activity; (2) Lighting is designed to avoid spilling onto adjoining residential zones and foreshore reserves; (3) Glare and reflection from the sun are minimised through material and glazing choice.	**P3.8**	(1) No probable solution identified; (2) Where adjoining the Point Lookout Tourist or Residential Zones the vertical illumination resulting from direct, reflected or other incidental light emanating from the site does not exceed 8 lux when measured at any point 1.5 metres outside the boundary at or above ground level; (3) No probable solution identified.

Assessable Development			
Specific Outcomes		**Probable Solutions**	
S3.9	Air quality impacts are eliminated or mitigated to a level that is compatible with an island centre environment.	**P3.9**	No probable solution identified.
S3.10	(1) Where adjoining a residential zone, non-residential uses or other development are located, and designed to reduce noise impacts.	**P3.10**	(1) The use or other development does not generate noise, measured as the $L_{Amax,adj,T}$ parameter, at the boundary of the nearest residential zone, greater than - (a) 5dB(A) above the background noise level between 7am to 10pm; or (b) 3dB(A) above the background noise level between 10pm to 7am. **Note -** ■ The $L_{Amax,adj,T}$ parameter is defined in the *Noise Measurement Manual* (Environmental Protection Agency, 2000). ■ Refer to Part 11 - Planning Scheme Policy 5 - Environmental Emissions for further information on noise and air quality impacts.
	Environment -		
S4.1	(1) Excavation and fill is minimised by locating and designing uses and other development to - (a) prevent the removal of existing native plants; (b) maintain natural drainage systems; (c) protect the amenity of adjoining properties; (d) minimises erosion and sediment run-off.	**P4.1**	(1) No probable solution identified. **Note -** Refer to Part 7 Division 6 - Excavation and Fill Code for assessment criteria where the site requires earthworks.
S4.2	(1) Landscaping – (a) Maximises the retention and reinstatement of native plants within the development site and adjoining road reserve; (b) allows for - (i) the retention and reinstatement of native plants in an undisturbed area that is no less than 20 percent of the site; or (ii) on a cleared site allows for the reinstatement of an area of not less than 20 percent of the site with native plants; (c) provides a 2 metre wide screen at the rear of the site	**P4.2**	(1) No probable solution identified. **Note -** No vegetation is removed prior to commencement of construction without Local Government approval in accordance with *Local Law 6 - Protection of Vegetation*.

Assessable Development			
Specific Outcomes		**Probable Solutions**	
	consisting of native plants except where pedestrian or vehicle access is required; (d) for car parking areas retain or reinstate native shade trees at a ratio of 1 per 5 car parking spaces; (e) utilises species from the native species listed in Part 9 - (i) Schedule 10 - Vegetation Species List; (ii) Schedule 9 - Street Trees where within the road reserve.		
S4.3	Driveways and crossovers are designed to minimise the removal of any existing street trees located within the road reserve.	**P4.3**	No probable solution identified.
S4.4	(1) Protect the environment from the impacts associated with the use or other development including - (a) stormwater run-off; (b) erosion and sediment run-off; (c) weed infestation; (d) water quality.	**P4.4**	(1) No probable solution identified.
	Infrastructure -		
S5.1	Infrastructure is provided in an orderly and cost effective manner that minimises disturbance and adverse impacts at Point Lookout and the surrounding coastal location.	**P5.1**	No probable solution identified.
S5.2	Infrastructure is designed, located, constructed and managed in a manner, which maximises and contributes to the sense of place and attractiveness of the Point Lookout Centre.	**P5.2**	No probable solution identified.
S5.3	(1) Uses and other development are serviced by Infrastructure including - (a) reticulated water; (b) reticulated sewerage; or (c) where the site is not connected or able to be connected to a reticulated sewerage system, wastewater - (i) is treated and disposed of on site subject to site, soil and locational constraints;	**P5.3**	(1) No probable solution identified. **Note -** For additional assessment criteria for stormwater requirements refer to Part 8 - Division 9 - Stormwater Management Code.

Assessable Development			
Specific Outcomes		**Probable Solutions**	
	(ii) reduces the potential for - a. contaminating groundwater, surface water or wetland environments; b. risks to reticulated water supply and public health; (d) stormwater management systems that - (i) utilise existing overland flow and drainage paths; (ii) incorporate measures to reduce stormwater quantity and manage stormwater quality; (e) constructed road that minimise tree removal and the concentration of stormwater run-off; (f) energy; (g) telecommunications; (h) waste and recycling collection facilities.		
S5.4	(1) Waste and recycling is managed to minimise impacts on the environment and nearby premises by - (a) locating waste and recycling storage areas to protect amenity and to provide safe manual handling of containers; (b) screening waste and recycling container storage areas from view; (c) providing for the cleansing of containers in a manner that does not cause adverse environmental impacts; (2) Uses and other development - (a) provide safe and efficient manoeuvring for waste collection vehicles; (b) ensure all bulk waste and recycling containers are serviced off-street and not on roads with public access; (c) ensure sufficient vertical clearance for container servicing; (d) ensure unobstructed access to containers by collection vehicles; (3) Waste and recycling storage is designed and located to - (a) provide adequate container volume to contain the waste and recyclables;	**P5.4**	(1) No probable solution identified. (2) No probable solution identified. (3) No probable solution identified. **Note -** Refer to Part 11 - Planning Scheme Policy 9 - Infrastructure Works – Chapter 16 – Waste Management for further information on waste and recycling container volume, storage, servicing, screening and cleansing. Refer to Part 8 - Division 1 - Access and Parking Code for waste collection vehicle servicing and manoeuvring assessment criteria.

Assessable Development			
Specific Outcomes		**Probable Solutions**	
	(b) provide recycle containers in an equivalent or greater volume to waste containers; (c) provide a dedicated waste and recycling container storage area that is convenient and safe to use; (d) ensure containers are located on impermeable surfaces.		
S5.5	(1) Uses and other development maximise the safe, convenient and comfortable movement of public transport passengers, pedestrians and cyclists by providing - (a) links to public transport systems; (b) pedestrian and cycle paths throughout the centre and neighbouring residential areas; (c) pathways, building entrances, amenities and seating that support accessibility for people with special needs.	**P5.5**	(1) No probable solution identified. **Note -** Refer to Part 8 - ■ Division 1 - Access and Parking Code for further assessment criteria on access and internal movement; ■ Division 7 - Infrastructure Works Code for further assessment criteria on provision, design and construction of utility infrastructure and pedestrian and cycle paths.
S5.6	(1) Opportunities for cycling as a model choice for employees and customers are provided through - (a) clearly defined on-site cycle paths and facilities; (b) secure cycle storage areas, and facilities including showers and lockers for employees; (c) provision for cycle spaces for customers.	**P5.6**	(1) Cycling facilities include - (a) on-site bicycle facilities that are designed and constructed in accordance with *AUSTROAD's Traffic Engineering Practice, Part 14 - Bicycles*; (b) the following for employees - (i) 1 bicycle space per 100m^2 of gross floor area; (ii) 1 personal locker per 2 bicycle parking spaces; (iii) 1 shower cubicle with change area per 5 bicycle spaces; or (iv) 1 shower cubicle with change area if less than 5 bicycle spaces are required; (c) 1 bicycle space per 100m^2 of gross floor area for customers, up to a maximum of 10 spaces.
S5.7	(1) Vehicular access, parking facilities and service delivery areas are located and designed to - (a) minimise impact on adjoining zones; (b) minimise conflicts between traffic using the centre, local residential traffic, service	**P5.7**	(1) No probable solution identified. **Note -** ■ Refer to Part 8 -Division 1 - Access and Parking Code for further assessment criteria; ■ A portion of car parking can be located in the road reserve.

Assessable Development			
Specific Outcomes		**Probable Solutions**	
	vehicles, pedestrians and cyclists. (c) provide for integrated car parking and service delivery areas.		
S5.8	Community infrastructure is able to function effectively during and immediately after flood events.	**P5.8**	Community infrastructure is located at or above the recommended flood levels in Table 2 - Recommended Flood Levels for Community Infrastructure.

Table 1 - Inconsistent Uses

Inconsistent Uses
Aged Persons and Special Needs Housing
Agriculture
Airport
Apartment Building
Animal Keeping
Bed and Breakfast
Brothel
Car Wash Facility
Cemetery
Display Dwelling
Drive Through Restaurant
Dual Occupancy - where not part of a mixed use development
Dwelling House
Extractive Industry
Forestry
Funeral Parlour
General Industry
Heavy Industry
High Impact Industry
Home Business - except where in a dwelling unit approved under this planning scheme
Institution
Intensive Agriculture
Landscape Supply Depot
Marine Services
Mobile Home Park
Multiple Dwelling - where not part of a mixed use development
Outdoor Recreation Facility
Relative's Apartment
Roadside Stall
Rural Enterprise
Service Industry - where having more than $100m^2$ in gross floor area
Small Lot House
Vehicle Depot
Vehicle Parking Station
Vehicle Repair Premises
Warehouse

Table 2 - Recommended Flood Levels for Community Infrastructure

Type of Community Infrastructure	Recommended Flood Level AEP(ARI)
Emergency services, other than police facilities	0.2% (1 in 500 year ARI)
Emergency shelters	0.5% (1 in 200 years ARI)
Police facilities	0.5% (1 in 200 years ARI)
Hospitals and associated facilities	0.2% (1 in 500 years ARI)
Stores of valuable records or items of historic or cultural significance such as galleries and libraries	0.5% (1 in 200 years ARI)
Power stations	0.2% (1 in 500 years ARI)
Major switch yards	0.2% (1 in 500 years ARI)
Substations	0.5% (1 in 200 years ARI)
Sewerage treatment plants	1% (1 in 100 years ARI)
Water treatment plants	0.5% (1 in 200 years ARI)
■ State-controlled roads ■ Works of an electricity entity not otherwise listed in this table ■ Railway lines, stations and associated facilities ■ Aviation facilities ■ Communication network facilities	No specific recommended by flood level by development proponents should ensure that the infrastructure is optimally located and designed to achieve suitable levels of service, having regard to the processes and policies of the administering government agency.

Reference - *State Planning Policy Guideline 1/03: Mitigating the Adverse Impacts of Flood, Bushfire ad Landslide.*

Diagram 1 - Building Setbacks

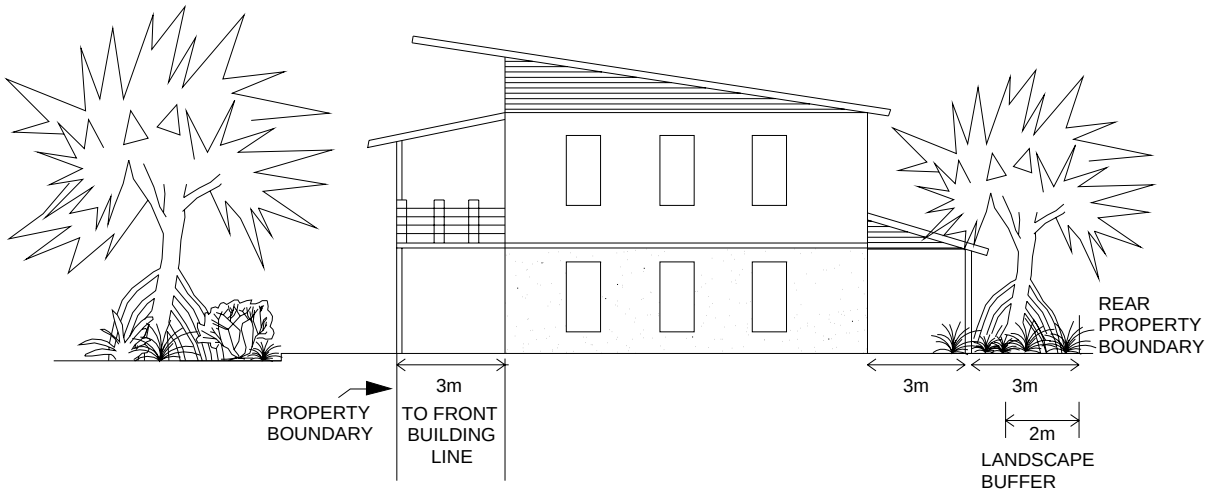

Diagram 2 - Buildings which Address the Street

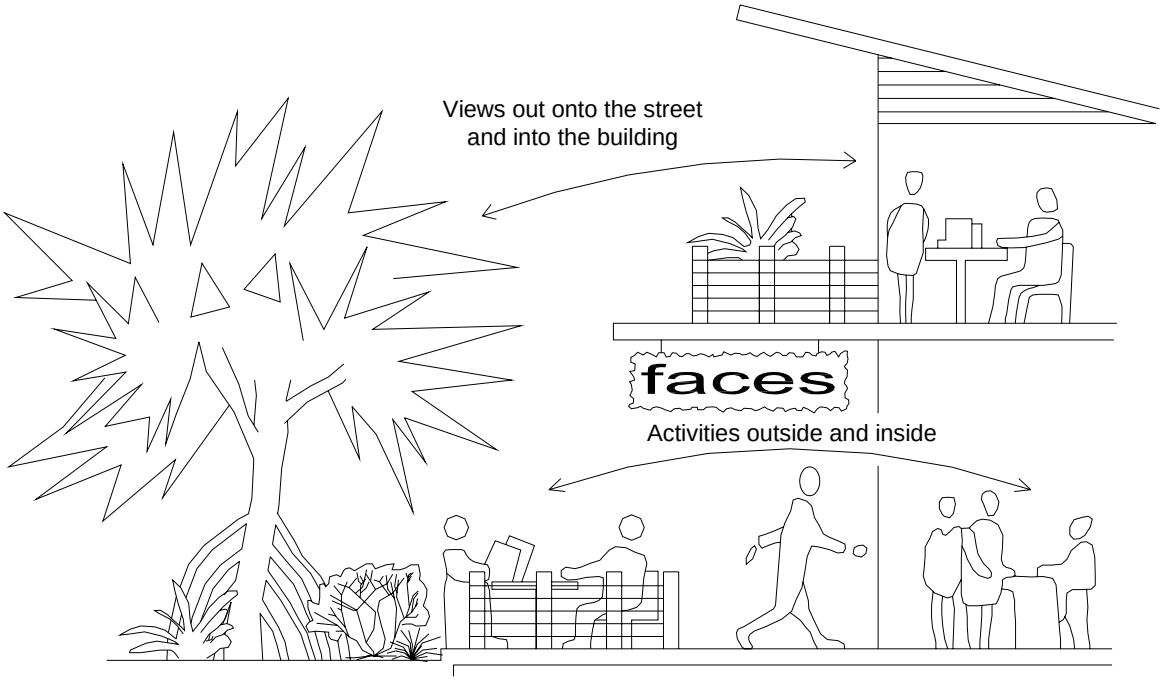

Division 19 - Point Lookout Residential Zone

4.19.1 Introduction

(1) This division contains the provisions for the Point Lookout Residential Zone. They are -

(a) The Point Lookout Residential Zone Tables of Assessment, that incorporates -
- (i) Levels of assessment for development in the Point Lookout Residential Zone (section 4.19.2);
- (ii) Assessment criteria for development in the Point Lookout Residential Zone (section 4.19.3);
- (iii) Point Lookout Residential Zone - Table of Assessment for Material Change of Use of Premises (section 4.19.4);
- (iv) Point Lookout Residential Zone - Table of Assessment for Other Development not associated with a Material Change of Use of Premises (section 4.19.5).

(b) The Point Lookout Residential Zone Code, that incorporates -
- (i) Compliance with the Point Lookout Residential Zone Code (section 4.19.6);
- (ii) Overall Outcomes for the Point Lookout Residential Zone Code (section 4.19.7);
- (iii) Specific Outcomes and Probable Solutions applicable to Assessable Development (section 4.19.8).

4.19.2 Levels of assessment for development in the Point Lookout Residential Zone

(2) Sections 4.19.4 and 4.19.5 identify the level of assessment for development in the Point Lookout Residential Zone, as follows -

(a) section 4.19.4 Point Lookout Residential Zone - Table of Assessment for Making a Material Change of Use of Premises[4.154] -
- (i) column 1 identifies uses that are exempt, self-assessable or assessable;
- (ii) column 2 identifies the level of assessment for the uses listed in column 1;
- (iii) the use is impact assessable where -
  - a. it is defined in Part 9 - Schedule 3 - Dictionary, Division 1 - Uses and is not listed in column 1; or
  - b. it is listed in column 1 and does not comply with the level of assessment qualifications listed in column 2; or
  - c. it is not defined in Schedule 3 - Dictionary, Division 1 - Uses.

(b) section 4.19.5 Point Lookout Residential Zone - Table of Assessment for Other Development not associated with a Material Change of Use of Premises -
- (i) column 1 identifies other development that is exempt, self-assessable or assessable;
- (ii) column 2 identifies the level of assessment for other development listed in column 1;
- (iii) where the other development is not listed in column 1 it is exempt.

(3) Overlays may alter the level of assessment identified in (1)(a) and (b)[4.155].

[4.154] Works associated with an application for a material change of use of premises may be assessed together with the material change of use

[4.155] Refer to Part 5 - Overlays to determine the level of assessment for the use or other development where an Overlay affects the lot and Part 1, section 1.2.5(10)(f) that explains how the highest level of assessment applies.

4.19.3 Assessment criteria for development in the Point Lookout Residential Zone

(4) Development in the Point Lookout Residential Zone is assessed against the assessment criteria listed in column 3 of sections 4.19.4 and 4.19.5, as follows -

(a) acceptable solutions of applicable codes for self-assessable development; or

(b) applicable codes for code assessable development.

(5) Self-assessable development that does not comply with all the acceptable solutions of the applicable codes is assessable development.

(6) Impact assessable development will be assessed against all relevant provisions of the Redlands Planning Scheme.

Note -

- The level of assessment indicated within section 4.19.4 - Point Lookout Residential Zone - Table of Assessment for Material Change of Use of Premises may be affected by Division 2 of the Regulatory Provisions of the *SEQ Regional Plan 2005-2026*.
- The level of assessment for reconfiguration as indicated within section 4.19.5 - Point Lookout Residential Zone - Table of Assessment for Other Development not associated with a Material Change of Use of Premises, where within the Regional Landscape and Rural Production Area or Investigation Area of the *SEQ Regional Plan 2005-2026* -
  - complies with Division 3 of the Regulatory Provisions;
  - has a minimum lot size of 100 hectares, unless the subdivision meets an exclusion documented in Division 3.

4.19.4 Point Lookout Residential Zone - Table of Assessment for Material Change of Use of Premises

Point Lookout Residential Zone -
Table of Assessment for Material Change of Use of Premises

column 1	column 2	column 3
Use[4.156]	**Level of Assessment**[4.157]	**Assessment Criteria**
Bed and Breakfast	Code Assessable	■ Point Lookout Residential Zone Code ■ Bed and Breakfast Code ■ Infrastructure Works Code ■ Landscape Code
Display Dwelling	Code Assessable	■ Point Lookout Residential Zone Code ■ Display Dwelling Code
Dual Occupancy	Code Assessable If the use is located on a lot or premises greater than 700m^2 in area Otherwise - Impact Assessable	■ Point Lookout Residential Zone Code ■ Dual Occupancy Code ■ Development Near Underground Infrastructure Code ■ Domestic Driveway Crossover Code ■ Erosion Prevention and Sediment Control Code ■ Excavation and Fill Code ■ Infrastructure Works Code ■ Landscape Code ■ Stormwater Management Code
Dwelling House	Code Assessable	■ Point Lookout Residential Zone Code ■ Dwelling House Code ■ Development Near Underground Infrastructure Code ■ Domestic Driveway Crossover Code ■ Erosion Prevention and Sediment Control Code ■ Excavation and Fill Code ■ Infrastructure Works Code ■ Stormwater Management Code
Estate Sales Office	Code Assessable	■ Point Lookout Residential Zone Code ■ Estate Sales Office Code ■ Access and Parking Code ■ Development Near Underground Infrastructure Code
Home Business	Self-Assessable If complying with the assessment criteria being the acceptable solutions listed in column 3	■ Acceptable Solutions in section 6.15.4 of the Home Business Code

[4.156] See Part 9 - Schedule 3 - Dictionary, Division 1 - Uses.
[4.157] See Part 9 - Schedule 3 - Dictionary, Division 2 - Administrative Terms for a definition of level of assessment.

Point Lookout Residential Zone - Table of Assessment for Material Change of Use of Premises

column 1	column 2	column 3
Use[4.156]	**Level of Assessment**[4.157]	**Assessment Criteria**
	Code Assessable If not self-assessable	■ Point Lookout Residential Zone Code ■ Home Business Code ■ Access and Parking Code
Minor Utility	Exempt	
Park	Self-Assessable If - (1) Being undertaken by the local government; (2) On land in the ownership or control of the local government; (3) Complying with the assessment criteria being the acceptable solutions listed in column 3 Code Assessable If not self-assessable	■ Acceptable Solutions in section 6.20.4 of the Park Code ■ Acceptable Solutions of section 8.5.4 of the Development Near Underground Infrastructure Code ■ Point Lookout Residential Zone Code ■ Park Code ■ Access and Parking Code ■ Development Near Underground Infrastructure Code ■ Infrastructure Works Code ■ Landscape Code ■ Stormwater Management Code
Relatives Apartment	Code Assessable	■ Point Lookout Residential Zone Code ■ Relatives Apartment Code ■ Development Near Underground Infrastructure Code ■ Erosion Prevention and Sediment Control Code ■ Excavation and Fill Code ■ Stormwater Management Code
Road	Exempt	
Small Lot House	Code Assessable If - (1) The building height is - (a) 8.5 metres or less above ground level; (b) 2 storey or less; (2) The use does not involve built to boundary walls; (3) The premises -	■ Point Lookout Residential Code ■ Small Lot House Code ■ Development Near Underground Infrastructure Code ■ Domestic Driveway Crossover Code ■ Erosion Prevention and Sediment Control Code ■ Excavation and Fill Code ■ Infrastructure Works Code

Point Lookout Residential Zone - Table of Assessment for Material Change of Use of Premises

column 1	column 2	column 3
Use[4.156]	**Level of Assessment**[4.157]	**Assessment Criteria**
	(a) is greater than 400m^2 and less than 500m^2 in area; (b) has a minimum frontage of 10 metres. Otherwise - Impact Assessable	■ Stormwater Management Code
Telecommunications Facility	Self-Assessable[4.158] If complying with the assessment criteria being the acceptable solutions listed in column 3 Otherwise - Impact Assessable	■ Acceptable Solutions in section 6.26.4 of the Telecommunications Facility Code ■ Acceptable Solutions in section 8.5.4 of the Development Near Underground Infrastructure Code ■ Acceptable Solutions in section 8.6.4 of the Erosion Prevention and Sediment Control Code ■ Acceptable Solutions A1.(1) (a)and(c) in section 7.6.4 of the Excavation and Fill Code
Temporary Use	Self-Assessable If complying with the assessment criteria being the acceptable solutions listed in column 3 Otherwise - Impact Assessable	■ Acceptable Solutions in section 6.27.4 of the Temporary Use Code
Utility Installation	Code Assessable	■ Point Lookout Residential Zone Code ■ Access and Parking Code ■ Development Near Underground Infrastructure Code ■ Erosion Prevention and Sediment Control Code ■ Excavation and Fill Code ■ Landscape Code ■ Stormwater Management Code
Defined uses not listed in column 1	Impact Assessable	
Defined uses listed in column 1 that do not comply with the level of assessment qualifications in column 2	Impact Assessable	

[4.158] If not self-assessable, a Telecommunication Facility in the Point Lookout Residential Zone is impact assessable.

Point Lookout Residential Zone - Table of Assessment for Material Change of Use of Premises

column 1	column 2	column 3
Use[4.156]	Level of Assessment[4.157]	Assessment Criteria
Uses not defined in Part 9 - Schedule 3 - Dictionary, Division 1 - Uses	Impact Assessable	

4.19.5 Point Lookout Residential Zone - Table of Assessment for Other Development not associated with a Material Change of Use of Premises

Point Lookout Residential Zone - Table of Assessment for Other Development

column 1	column 2	column 3
Other Development	**Level of Assessment**[4.159]	**Assessment Criteria**
Reconfiguration for -		
Creating lots by subdividing another lot by Standard Format Plan[4.160]	Impact Assessable	
Creating lots by subdividing another lot by - ■ Building Format Plan; or ■ Volumetric Format Plan	Code Assessable	■ Point Lookout Residential Zone Code ■ Reconfiguration Code
■ Rearranging the boundaries of a lot by registering a plan of subdivision; or ■ Dividing land into parts by Agreement; or ■ Creating an easement giving access to a lot from a constructed road	Code Assessable	■ Reconfiguration Code
Building Work for -		
Communications Structures	Exempt If minor building work[4.161] Self-Assessable If - (1) Not exempt; (2) Complying with the assessment criteria being the acceptable solutions listed in column 3 Code Assessable If not self assessable	■ Acceptable Solutions in section 7.2.4 of the Communications Structures Code ■ Communications Structures Code

[4.159] See Part 9 - Schedule 3 - Dictionary, Division 2 - Administrative Terms for a definition of level of assessment.
[4.160] Whether or not having a Community Management Statement.
[4.161] See Part 9 - Schedule 3 - Dictionary, Division 2 - Administrative Terms for a definition of minor building work.

Point Lookout Residential Zone - Table of Assessment for Other Development

column 1	column 2	column 3
Other Development	**Level of Assessment**[4.159]	**Assessment Criteria**
Domestic Additions	Exempt If minor building work[4.161] Code Assessable If not exempt	■ Point Lookout Residential Zone Code ■ Domestic Additions Code ■ Development Near Underground Infrastructure Code ■ Erosion Prevention and Sediment Control Code ■ Excavation and Fill Code ■ Infrastructure Works Code ■ Stormwater Management Code
Domestic Outbuilding	Exempt If minor building work[4.161] Code Assessable If not exempt	■ Point Lookout Residential Zone Code ■ Domestic Outbuilding Code ■ Development Near Underground Infrastructure Code ■ Erosion Prevention and Sediment Control Code ■ Excavation and Fill Code
On-site raising or relocation of an existing dwelling unit	Code Assessable	■ Point Lookout Residential Zone Code ■ On-Site Raising and Relocation Code ■ Development Near Underground Infrastructure Code ■ Erosion Prevention and Sediment Control Code ■ Excavation and Fill Code ■ Infrastructure Works Code ■ Stormwater Management Code
Private Swimming Pool	Code Assessable	■ Point Lookout Residential Zone Code ■ Private Swimming Pool Code ■ Development Near Underground Infrastructure Code ■ Erosion Prevention and Sediment Control Code ■ Excavation and Fill Code

Point Lookout Residential Zone - Table of Assessment for Other Development

column 1	column 2	column 3
Other Development	**Level of Assessment**[4.159]	**Assessment Criteria**
Private Tennis Court	Code Assessable	■ Point Lookout Residential Zone Code ■ Private Tennis Court Code ■ Erosion Prevention and Sediment Control Code ■ Excavation and Fill Code ■ Landscape Code
Operational Work for -		
Constructing a Domestic Driveway Crossover	Self-Assessable If complying with the assessment criteria being the acceptable solutions listed in column 3 Code Assessable If not self-assessable	■ Acceptable Solutions in section 7.4.4 of the Domestic Driveway Crossover Code ■ Domestic Driveway Crossover Code
Excavation and Fill	Exempt If - (1) Disturbing less than 50m^3 of soil; (2) A height/depth not exceeding 300mm measured from ground level Self-Assessable If - Not exempt; Complying with the assessment criteria being the acceptable solutions listed in column 3 Code Assessable If not self-assessable	■ Acceptable Solutions in section 8.6.4 of the Erosion Prevention and Sediment Control Code ■ Acceptable Solutions A1.(1)(a)and(c) in section 7.6.4 of the Excavation and Fill Code ■ Erosion Prevention and Sediment Control Code ■ Excavation and Fill Code
Placing an Advertising Device on Premises	Self-Assessable If complying with the assessment criteria being the acceptable solutions listed in column 3 Code Assessable If not self-assessable	■ Acceptable Solutions in section 7.1.4 of the Advertising Devices Code ■ Advertising Devices Code

Point Lookout Residential Zone - Table of Assessment for Other Development

column 1	column 2	column 3
Other Development	**Level of Assessment**[4.159]	**Assessment Criteria**
Operational Work for Reconfiguring a Lot (by Standard Format Plan)	Code Assessable	■ Reconfiguration Code ■ Development Near Underground Infrastructure ■ Erosion Prevention and Sediment Control Code ■ Excavation and Fill Code ■ Infrastructure Works Code ■ Landscape Code ■ Stormwater Management Code
All other development not listed in column 1	Exempt	

4.19.6 Compliance with Point Lookout Residential Zone Code

(1) Development that is consistent with the specific outcomes in section 4.19.8 complies with the Point Lookout Residential Zone Code.

Note -

The following planning scheme policies will assist in achieving specific outcomes within the Point Lookout Residential Zone Code -

- Planning Scheme Policy 5 - Environmental Emissions;
- Planning Scheme Policy 9 - Infrastructure Works;
- Planning Scheme Policy 12 - Social and Economic Impact Assessment.

4.19.7 Overall Outcomes for Point Lookout Residential Zone Code

(1) The overall outcomes are the purpose of the Point Lookout Residential Zone Code.

(2) The overall outcomes sought for the Point Lookout Residential Zone Code are described by five key characteristics[4.162] -

(a) Uses and Other Development;
(b) Built Form and Density;
(c) Amenity;
(d) Environment;
(e) Infrastructure.

Each of these is detailed below.

(a) Uses and Other Development

(i) provide a range of residential uses that -
a. are in a detached form, interspersed and sympathetically sited amongst Point Lookout's natural landscape and bushland elements;
b. maximise the use of existing residential land;
c. encourage opportunities to work from home;
d. provide for housing choice for permanent residents and visitors.

(ii) provide for the development of a limited range of non-residential uses that -
a. only fulfil a local community need;
b. are consistent with a residential environment.

(iii) Other development does not compromise expected uses and associated activities in the zone.

(b) Built Form and Density

(i) Built form and density minimises visual impact and prevents buildings from dominating the natural landscape and the surrounding streetscape by -
a. ensuring that individual buildings are detached, small-scale in size and low-rise in height;
b. ensuring the retention and reinstatement of native vegetation that can screen buildings;
c. encourage buildings that incorporate architectural styles and specific elements that are influenced by the built environment established by the earlier built form of Point Lookout;
d. having building elements in relation to siting, width, depth and bulk that are consistent with the lot size and style of Point Lookout;

[4.162] In combination, the overall outcomes in section 4.19.7(2)(a)-(e) define the character of the Point Lookout Residential Zone

e. respecting the topography by ensuring buildings follow the contours of the land and minimise disturbance of the natural ground form.

(ii) The density of uses and other development reinforce the low-key island residential built form.

(c) Amenity

(i) Uses and other development achieve a high standard of residential amenity by -
a. protecting and enhancing places of cultural significance or streetscape value;
b. having access to natural light and ventilation, privacy and private open space commensurate with the use;
c. providing high quality usable public and private open space that meets the needs of the community;
d. maintaining the safety of people and property;
e. eliminating or mitigating impacts associated with light, noise, air quality and traffic;
f. improving pedestrian accessibility within the township by de-emphasising vehicular reliance.

(ii) The scale, operational attributes and impacts of non-residential uses maintains a high standard of residential amenity.

(d) Environment

(i) Uses and other development minimise adverse impacts on environmental and scenic values by -
a. responding to topographical features;
b. minimising the need for excavation and fill;
c. protecting the site from erosion;
d. maximising the retention of native plants;
e. maximising the use of plant species that are native and characteristic to the area;
f. incorporating best practice stormwater management solutions to protect natural drainage systems and enhancing water quality by maximising the permeability of the sand based island;
g. respecting the visual character of ridgelines and associated vegetation in their natural state.

(e) Infrastructure

(i) Uses and other development -
a. ensures efficient use of existing infrastructure;
b. provide for the extension of urban infrastructure in an orderly and cost effective manner through appropriate staging that is tailored to the specific needs of Point Lookout;
c. do not result in unacceptable risk to community infrastructure.

(ii) Uses and other development are serviced by infrastructure including -
a. reticulated water;
b. reticulated sewerage; or
c. where the lot or premises is not connected or able to be connected to the reticulated sewerage system, wastewater is treated and disposed of on-site subject to site, soil and locational constraints;
d. stormwater drainage that utilises the permeability of the sand island;
e. low-impact road systems that minimise the impacts on native plants and promote natural drainage systems;
f. energy;
g. telecommunications;
h. waste and recycling collection.

(iii) Uses and other development reinforce an integrated, legible, efficient and safe movement network that -
a. incorporates and provides a range of movement modes including public transport, passenger vehicles, walking and cycling;

b. promotes pedestrian, cycle and public transport networks that maximise both connectivity and permeability throughout the township and access to beaches and foreshore reserves while de-emphasising vehicular reliance.

4.19.8 Specific Outcomes and Probable Solutions applicable to Assessable Development

Assessable Development			
Specific Outcomes		**Probable Solutions**	
	Uses and Other Development -		
S1.1	Uses identified as inconsistent in Table 1 are not established in the zone.	**P1.1**	No probable solution identified.
S1.2	(1) Non-residential uses, such as local shopping, medical facilities, churches, child care centres and the like may be contemplated in appropriate locations and subject to detailed development requirements including - (a) being located on the major road network; (b) co-locating with other similar uses; (c) providing only for the identified convenience needs of the local community; (d) not impacting on the role and function of the City's network of centres; (e) resulting in positive economic and social benefits for the local community. **Note -** Refer to the Part 11 - Planning Scheme Policy 12 - Social and Economic Impact Assessment.	**P1.2**	(1) Non-residential uses - (a) locate on the corner of collector or higher order roads; (b) where of - (i) retail or commercial nature - a. are co-located with other similar uses; b. do not exceed a maximum of 600m^2 gross floor area, with no single tenancy exceeding 400m^2 gross floor area; c. are not within 800 metres of any similar uses or a centre zone; (ii) community facilities, health care centres, child care centres, or uses of a similar community service nature - a. are not greater than 400m^2 of gross floor area per use; b. are co-located with other similar uses or retail or commercial uses.
S1.3	(1) The following uses are encouraged - (a) bed and breakfast; (b) home business; (c) relatives apartment.	**P1.3**	No probable solution identified. **Note -** For assessment criteria associated with these uses refer to Part 6 - ■ Division 5 - Bed and Breakfast Code ■ Division 15 - Home Business Code ■ Division 21 - Relatives Apartment Code
	Built Form and Density -		
S2.1	(1) Building height is 8.5 metres or less above ground level; (2) The floor level of the upper most habitable level is no more than 5.1 metres above ground level;	**P2.1**	(1) No probable solution identified; (2) No probable solution identified; (3) No probable solution identified; (4) No probable solution identified; (5) No probable solution identified.

Assessable Development			
Specific Outcomes		**Probable Solutions**	
	(3) The floor of the first habitable level, including decks or verandahs, is no more than 3 metres above ground level at any point; (4) Roofs or pergolas covering decks are a maximum 9.5 metres above ground level providing they are unenclosed and no more than $10m^2$ in area for each detached building; (5) Buildings are constructed to respect key ridgelines and associated vegetation.		**Note -** Refer to Diagram 1 - Building Height.
S2.2	(1) Site coverage - (a) is consistent with the Point Lookout low-key residential character which is influenced by the earlier built form of Point Lookout; (b) does not exceed 30 percent of the site area; (c) of any single detached building does not exceed - (i) $150m^2$ when the building height is not more than 4.5 metres above ground level; or (ii) $140m^2$ when the building height is over 4.5 metres above ground level.	**P2.2**	(1) No probable solution identified. **Note -** ■ Site coverage may be achieved by the construction of more than one detached building on a lot; ■ Garages and carports to be included when calculating the percentage of a site covered by buildings; ■ Refer to Diagram 2 and 3 - Site Coverage.
S2.3	(1) Setbacks - (a) allow for retention of native plants and the introduction of landscaping to complement building massing and to screen buildings; (b) encourage development that complements the streetscape established by the earlier built form of Point Lookout; (c) at the side and rear provide separation between buildings and allow for landscaping to screen buildings, privacy and open space; (d) ensure a built form that does not dominate the natural environment; (e) are 6 metres from the front property boundary; or (f) an open carport may be built in the 6 metre setback where- (i) the physical characteristics of the lot do not allow any other alternative; (ii) the maximum height of the	**P2.3**	(1) No probable solution identified. **Note -** Refer to Diagram 4 - Setbacks.

Assessable Development			
Specific Outcomes		**Probable Solutions**	
	open carport is 3.5 metres; (g) are 2 metres for the side boundary with setbacks not including driveways, vehicle turning areas, car parking areas, garages and carports; (h) are 2 metres for any building or structure less than 4.5 metres above ground level and 3.5 metres for any building or structure over 4.5 metres above ground level for the rear boundary; (i) are 4 metres to the outer most projection for internal separation of detached buildings on the same lot and 6 metres between any walls of detached buildings on the same lot; (j) eaves are a minimum 600mm; (k) buildings can be linked by one unenclosed verandah or walkway.		
S2.4	The number of dwelling units on internal lots is limited to maintain the residential amenity of adjoining properties.	**P2.4**	The number of dwelling units on an internal lot is limited to one (1) dwelling unit per 500m^2 of site area excluding the area of any access way or access easement.
S2.5	(1) Buildings are designed to reflect the sub-tropical climate through open frame architecture including verandahs/decks and awnings; (2) Building incorporate architectural elements that are responsive to the natural environment setting and residential development form of Point Lookout, particularly the development form post 1996. **Note -** ■ Slab on ground is not favoured; ■ Refer to Schedule 7- Roof Colour Chart.	**P2.5**	(1) No probable solution identified. (2) Architectural elements include - (a) a built form that incorporates the use of sheet material finishes such as timber and fibre cement, for external cladding; (b) limiting masonry construction so that no masonry walls exceed 4.5 metres above ground level and - (i) are rendered and painted; or (ii) where constructed of local island stone left unfinished; (c) roofing - (i) that is of sheet materials; (ii) is of a colour which is not reflective, glare producing or visually obtrusive.
S2.6	(1) Fencing is consistent with the low-key residential built form at Point Lookout.	**P2.6**	(1) Fences - (a) are not permitted beyond the front building line;

Assessable Development			
Specific Outcomes		**Probable Solutions**	
	Note - Refer to Diagram 5 - Fencing.		(b) have a maximum height of 1.5 metres; (c) are of open timber construction.
	Amenity -		
S3.1	Uses and other development do not adversely impact on the cultural heritage values of a registered heritage place(s) or character precinct.	**P3.1**	No probable solution identified.
S3.2	(1) Uses - (a) are capable of receiving solar access; (b) maintain solar access to the habitable rooms and open space areas of surrounding uses.	**P3.2**	(1) No probable solution identified.
S3.3	(1) Building layout and design maximise privacy (visual and acoustic) through - (a) locating habitable rooms so they do no directly overlook habitable rooms of adjacent uses, either within or adjoining the use; (b) separating noise generating areas from sleeping areas.	**P3.3**	(1) No probable solution identified. **Note -** Refer to relevant use code for specific privacy assessment criteria.
S3.4	(1) Private open space areas are - (a) clearly defined for private use; (b) easily accessible from living or common areas; (c) useable in size and dimensions; (d) of a suitable slope; (e) capable of receiving solar access.	**P3.4**	(1) No probable solution identified. **Note -** Refer to the relevant use code for specific open space assessment criteria.
S3.5	(1) Uses and other development are designed in accordance with the principles of Crime Prevention through Environmental Design (CPTED) to assist in crime prevention by being - (a) orientated towards the street to provide opportunities for casual surveillance of public places; (b) designed and well lit to ensure casual surveillance opportunities of car park areas, and pedestrian and cycle paths.	**P3.5**	(1) No probable solution identified.
S3.6	(1) Artificial light does not result in unreasonable disturbance to any	**P3.6**	(1) The vertical illumination resulting from direct, reflected or other

Assessable Development			
Specific Outcomes		**Probable Solutions**	
	person, activity or fauna; (2) Glare and reflection from the sun are minimised through material and glazing choice.		incidental light emanating from the site does not exceed 8 lux when measured at any point 1.5 metres outside the boundary at or above ground level; (2) No probable solution identified.
S3.7	(1) Noise generated by the use or other development is compatible with that experienced in a residential environment and can ensure a high standard of residential amenity.	**P3.7**	(1) The use or other development does not generate noise, measured as the $L_{Amax,adj,T}$ parameter, at the boundary of the lot or premises, greater than - (a) 5dB(A) above the background noise level between 7am to 10pm; (b) 3dB(A) above the background noise level between 10pm to 7am. **Note -** The $L_{Amax,adj,T}$ parameter is defined in the *Noise Measurement Manual* (Environmental Protection Agency, 2000).
S3.8	Air quality impacts are eliminated or mitigated to a level that is compatible with a residential environment by not emitting vibration, odour, fumes, smoke, vapour, steam, soot, ash, dust, grit, oil, radio or electrical interference beyond the premises.	**P3.8**	No probable solutions identified. **Note -** Refer to Part 11 - Planning Scheme Policy 5 - Environmental Emissions for further information on noise and air quality impacts.
S3.9	(1) Traffic movements are compatible with that experienced in a residential environment and can ensure a high standard of residential amenity.	**P3.9**	(1) Non-residential uses for commercial/retail, community facilities and services, or similar are - (a) located where on a collector or higher order road; (b) do not gain access from local roads. **Note -** Refer to Part 11 - Planning Scheme Policy 5 - Environmental Emissions for further information on air quality and noise impacts.
	Environment -		
S4.1	(1) Protect the environment from impacts associated with the use or other development including - (a) stormwater run-off; (b) water quality; (c) erosion and sediment run-off;	**P4.1**	(1) No probable solution identified.

Assessable Development			
Specific Outcomes		**Probable Solutions**	
	(d) weed infestation.		
S4.2	(1) Landscaping - (a) maximises the retention or reinstatement of native plants within the lot or premises and adjoining road reserve and buildings are sited on the lot to - (i) allow for the retention or reinstatement of native plants in an area of the site comprising at least 30 percent of the site and being - a. a minimum width of 2 metres; b. a minimum area of $5m^2$; (b) retains existing mature native trees located outside the building setback areas where considered to be of environmental or scenic value and the area for the vegetation to be retained/reinstated is located within the building setback areas in the first instance, with priority given to the front boundary setback area; (c) screens buildings particularly from streets, walkways and other public places; (d) protects and enhances native vegetation as the significant streetscape experience of Point Lookout; (2) Plant species used for landscaping are native to Point Lookout and are selected from Part 9 - (a) Schedule 10 - Vegetation Species List; (b) Schedule 9 - Street Trees where in the road reserve; (3) Uncovered external paved or hard landscaped areas not used for car parking are limited to $20m^2$ per dwelling house or $10m^2$ per dwelling unit.	**P4.2**	(1) No probable solution identified. (2) No probable solution identified. (3) No probable solution identified. **Note -** Refer to Diagram 6 - Vegetation and Landscaping.
S4.3	(1) Development does not involve substantial site works and minimises excavation and fill work to - (a) prevent the unnecessary removal of existing native plants; (b) maintain natural drainage	**P4.3**	(1) No probable solution identified. (2) No probable solution identified. **Note -** Refer to Part 7 - Division 6 - Excavation and Fill Code for specific assessment criteria.

Assessable Development			
Specific Outcomes		**Probable Solutions**	
	systems; (c) protect the amenity of adjoining properties; (d) minimise erosion and sediment run-off. (2) Excavation and fill - (a) is limited to - (i) maximum cut of 1.2 metres below ground level; (ii) maximum fill of 1.2 metres above ground level; (b) involving retaining walls and terraces that are - (i) not constructed to create a level lot; (ii) a maximum 600mm high to the street frontage; (c) involving benched areas for internal driveways and external landscape areas to a maximum - (i) 25m^2 for a dwelling house; (ii) 12m^2 for a dwelling unit.		
S4.4	Fences do not impede existing overland flow paths.	**P4.4**	No probable solution identified.
	Infrastructure -		
S5.1	Infrastructure is provided in an orderly and cost effective manner that meets the nominated level of service for the Island and minimises disturbance and adverse impacts on the natural and coastal environment.	**P5.1**	No probable solution identified.
S5.2	(1) All uses are serviced by infrastructure including - (a) reticulated water; (b) reticulated sewerage; or (c) where the site is not connected or able to be connected to a reticulated sewerage system, wastewater - (i) is treated and disposed of on-sit subject to site, soil and locational constraints; (ii) reduces the potential for - a. contaminating groundwater, surface water or wetland environments; b. risks to reticulated water supply and public health; (d) stormwater management systems - (i) utilise existing natural	**P5.2**	(1) No probable solution identified. **Note -** Refer to Part 11 - Planning Scheme Policy 9 - Infrastructure Works.

Assessable Development			
Specific Outcomes		**Probable Solutions**	
	overland flow and drainage paths; (ii) incorporate measures to reduce stormwater quantity and manage stormwater quality; (e) constructed road that minimise tree removal and the concentration of stormwater run-off and promote natural drainage systems that utilise the permeability of the sand island; (f) energy; (g) telecommunications; (h) waste and recycling collection facilities.		
S5.3	(1) Waste and recycling is managed to minimise impacts on the environment by - (a) locating waste and recycling storage areas to protect amenity and to provide safe manual handling of containers; (b) screening waste and recycling container storage areas from view; (c) providing for the cleansing of containers in a manner that does not cause adverse environmental impacts.	**P5.3**	(1) No probable solution identified. **Note -** Refer to Part 11 - Planning Scheme Policy 9 - Infrastructure Works – Chapter 16 – Waste Management for further information on waste and recycling container volume, storage, servicing, screening and cleansing.
S5.4	(1) Uses and other development - (a) maximises opportunities to provide and upgrade pedestrian and cycle paths; (b) integrate and support potential use of public transport; (c) ensures pedestrian, cycle and public transport movement networks that maximise both connectivity and permeability throughout the township and access to beaches and foreshore reserves while de-emphasising vehicular reliance.	**P5.4**	(1) No probable solution identified. **Note -** For additional assessment criteria for provision, design and construction of utility infrastructure, roads and pedestrian and cycle paths refer to Part 8 - Division 7 - Infrastructure Works Code.
S5.5	(1) Driveways, car parking areas and uncovered paved or hard landscaped areas are constructed from permeable materials where possible to maintain natural drainage flows and maximise stormwater infiltration on-site; (2) Driveways and turning areas are not located in side setback areas.	**P5.5**	(1) Driveways and crossovers are - (a) a maximum of 3.6 metres wide including splays; (b) limited to one per frontage; (c) located to minimise the removal of any existing street trees located within the road reserve; (d) finished with permeable surface;

Assessable Development			
Specific Outcomes		**Probable Solutions**	
S5.6	Community infrastructure is able to function effectively during and immediately after flood events.	**P5.6**	(2) No probable solution identified. Community infrastructure is located at or above the recommended flood levels in Table 2.

Table 1 - Inconsistent Uses

Inconsistent Uses
Agriculture
Airport
Animal Keeping
Apartment Building
Brothel
Bulky Goods Showroom
Car Wash Facility
Caretakers Dwelling
Cemetery
Commercial Office - where having more than 200m^2 gross floor area
Display and Sale Activity
Drive Through Restaurant
Extractive Industry
Forestry
Funeral Parlour
Garden Centre
General Industry
Heavy Industry
High Impact Industry
Hospital
Hotel
Indoor Recreation Facility
Institution
Intensive Agriculture
Landscape Supply Depot
Marine Services
Mobile Home Park
Night Club
Outdoor Dining
Passenger Terminal
Produce Store
Refreshment Establishment - where having more than 200m^2 gross floor area
Retail Warehouse
Roadside Stall
Rural Enterprise
Service Industry - where having more than 100m^2 gross floor area
Service Station
Shop - where having more than 200m^2 gross floor area
Vehicle Depot
Vehicle Parking Station
Vehicle Repair Premises
Veterinary Surgery
Warehouse

Table 2 - Recommended Flood Levels for Community Infrastructure

Type of Community Infrastructure	Recommended Flood Level AEP (ARI)
Emergency services, other than police facilities	0.2% (1 in 500 year ARI)
Emergency shelters	0.5% (1 in 500 year ARI)
Police facilities	0.5%(1 in 500 year ARI)
Hospitals and associated facilities	0.2% (1 in 500 year ARI)
Stores of valuable records or items of historic or cultural significance, such as galleries and libraries	0.5% (1 in 500 year ARI)
Power stations	0.2% (1 in 500 year ARI)
Major switch yards	0.2% (1 in 500 year ARI)
Substations	0.5% (1 in 500 year ARI)
Sewerage treatment plants	1% (1 in 500 year ARI)
Water treatment plants	0.5% (1 in 500 year ARI)
■ State-controlled roads ■ Works of an electricity entity not otherwise listed in this table ■ Railway lines, stations and associated facilities ■ Aviation facilities ■ Communication network facilities	No specific recommended flood level but development proponents should ensure that the infrastructure is optimally located and designed to achieve suitable levels of service, having regard to the processes and policies of the administering government agency.

Reference - *State Planning Policy Guidelines 1/03: Mitigating the Adverse Impacts of Flood, Bushfire and Landslide*.

Diagram 1 - Building Heights

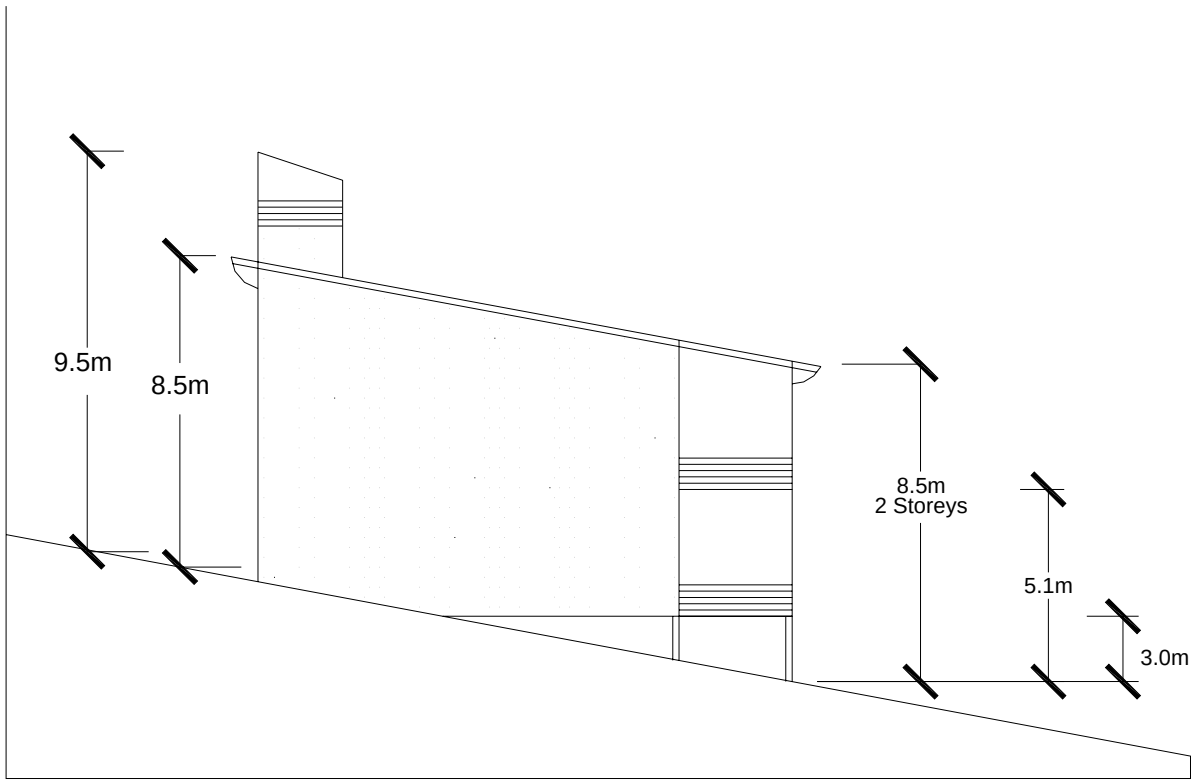

Diagram 2 - Multiple Dwellings Site Coverage

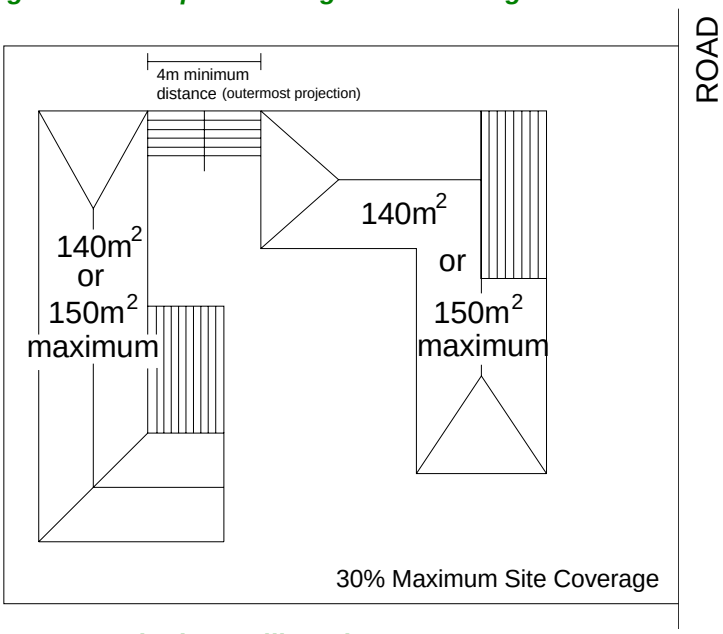

Diagram 3 - Single Dwelling Site Coverage

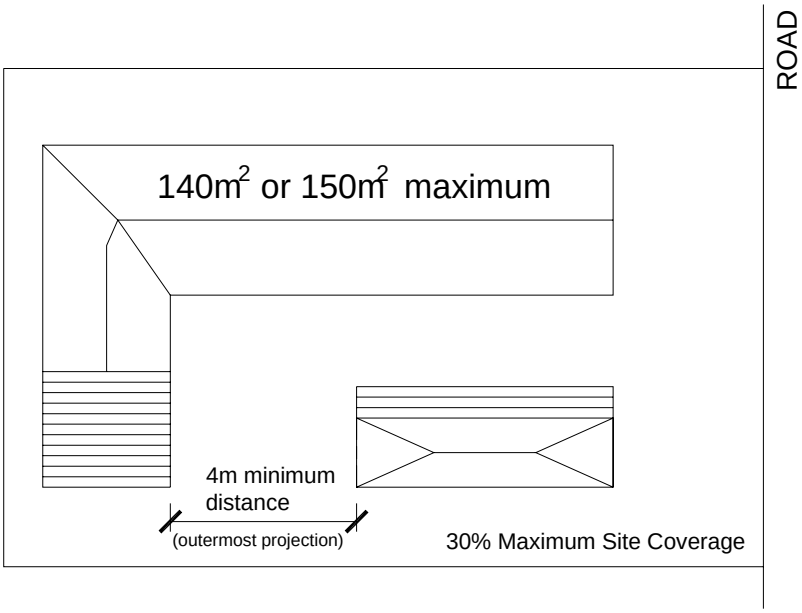

Diagram 4 - Building Setbacks

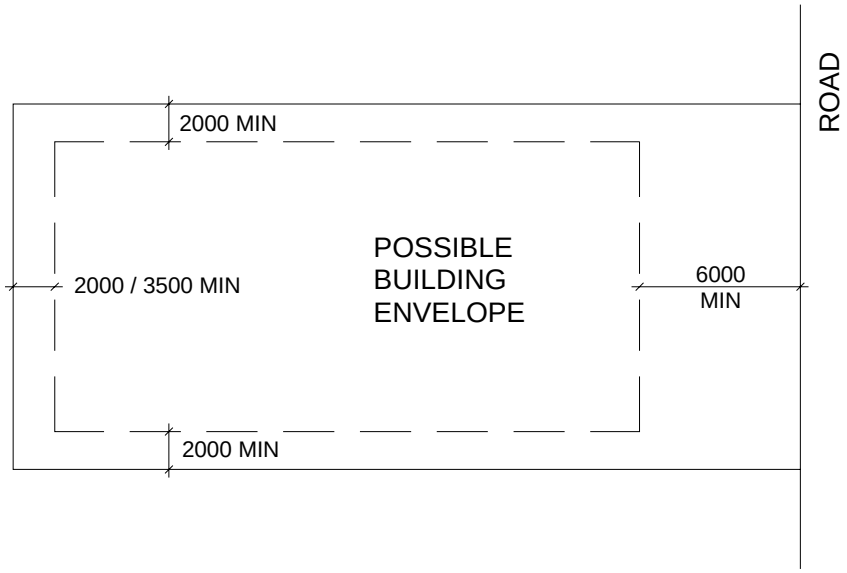

Diagram 5 - Fencing

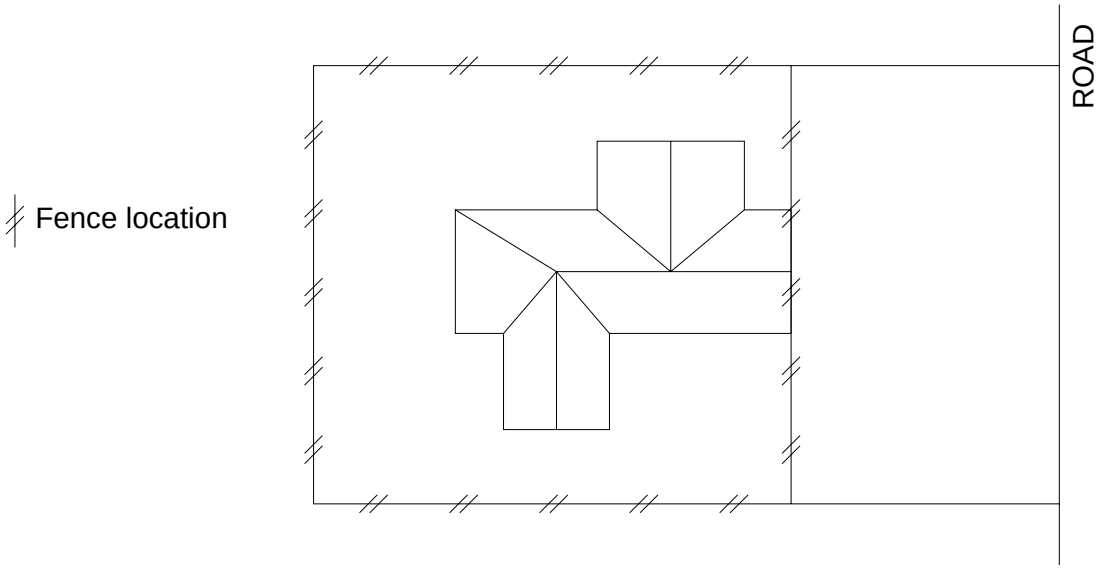

Diagram 6 - Vegetation and Landscaping

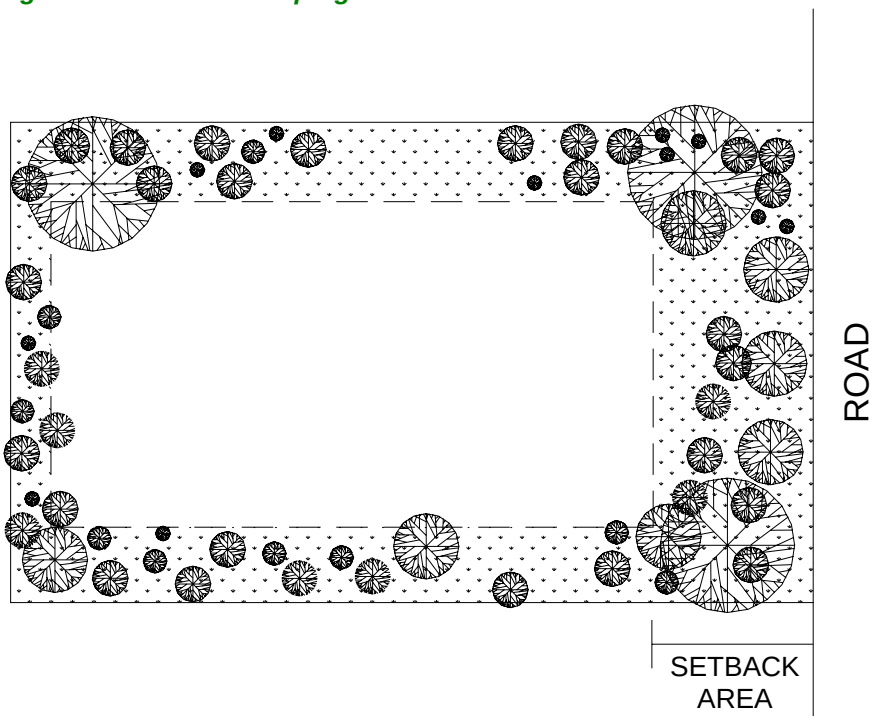

Division 20 - Point Lookout Tourist Zone

4.20.1 Introduction

(1) This division contains the provisions for the Point Lookout Tourist Zone. They are -

(a) The Point Lookout Tourist Zone Tables of Assessment, that incorporates -
(i) Levels of assessment for development in the Point Lookout Tourist Zone (section 4.20.2);
(ii) Assessment criteria for development in the Point Lookout Tourist Zone (section 4.20.3);
(iii) Point Lookout Tourist Zone - Table of Assessment for Material Change of Use of Premises (section 4.20.4);
(iv) Point Lookout Tourist Zone - Table of Assessment for Other Development not associated with a Material Change of Use of Premises (section 4.20.5).

(b) The Point Lookout Tourist Zone Code, that incorporates -
(i) Compliance with the Point Lookout Tourist Zone Code (section 4.20.6);
(ii) Overall Outcomes for the Point Lookout Tourist Zone Code (section 4.20.7);
(iii) Specific Outcomes and Probable Solutions applicable to Assessable Development (section 4.20.8).

4.20.2 Levels of assessment for development in the Point Lookout Tourist Zone

(2) Sections 4.20.4 and 4.20.5 identify the level of assessment for development in the Point Lookout Tourist Zone, as follows -

(a) section 4.20.4 Point Lookout Tourist Zone - Table of Assessment for Making a Material Change of Use of Premises[4.163] -
(i) column 1 identifies uses that are exempt, self-assessable or assessable;
(ii) column 2 identifies the level of assessment for the uses listed in column 1;
(iii) the use is impact assessable where -
a. it is defined in Part 9 - Schedule 3 - Dictionary, Division 1 - Uses and is not listed in column 1; or
b. it is listed in column 1 and does not comply with the level of assessment qualifications listed in column 2; or
c. it is not defined in Part 9 - Schedule 3 - Dictionary, Division 1 - Uses.

(b) section 4.20.5 Point Lookout Tourist Zone - Table of Assessment for Other Development not associated with a Material Change of Use of Premises -
(i) column 1 identifies other development that is exempt, self-assessable or assessable;
(ii) column 2 identifies the level of assessment for other development listed in column 1;
(iii) where the other development is not listed in column 1 it is exempt.

(3) Overlays may alter the level of assessment identified in (1)(a) and (b)[4.164].

[4.163] Works associated with an application for a material change of use of premises may be assessed together with the material change of use.
[4.164] Refer to Part 5 - Overlays to determine the level of assessment for the use or other development where an Overlay affects the lot and Part 1, section 1.2.5(10)(f) that explains how the highest level of assessment applies.

4.20.3 Assessment criteria for development in the Point Lookout Tourist Zone

(1) Development in the Point Lookout Tourist Zone is assessed against the assessment criteria listed in column 3 of sections 4.20.4 and 4.20.5, as follows -

(a) acceptable solutions of applicable codes for self-assessable development; or

(b) applicable codes for code assessable development.

(2) Self-assessable development which does not comply with all the acceptable solutions of the applicable codes is assessable development.

(3) Impact assessable development will be assessed against all relevant provisions of the Redlands Planning Scheme.

Note -

- The level of assessment indicated within section 4.20.4 - Point Lookout Tourist Zone - Table of Assessment for Material Change of Use of Premises may be affected by Division 2 of the Regulatory Provisions of the *SEQ Regional Plan 2005 - 2026.*
- The level of assessment for reconfiguration as indicated within section 4.20.5 - Point Lookout Tourist Zone - Table of Assessment for Other Development not associated with a Material Change of Use of Premises, where within the Regional Landscape and Rural Production Area or Investigation Area of the *SEQ Regional Plan 2005 - 2026* -
  - complies with Division 3 of the Regulatory Provisions;
  - has a minimum lot size of 100 hectares, unless the subdivision meets an exclusion documented in Division 3.

Note -

Summary of Point Lookout Tourist Zone Sub-areas	
Sub-area	**Description**
Sub-area PT1	East Coast Road
Sub-area PT2	East Coast Road
Sub-area PT3	Point Lookout Hotel
Sub-area PT4	Mooloomba Road
Sub-area PT5	Mooloomba Road
Sub-area PT6	Samarinda Drive
Sub-area PT7	George Nothling

4.20.4 Point Lookout Tourist Zone - Table of Assessment for Material Change of Use of Premises

Point Lookout Tourist Zone - Table of Assessment for Material Change of Use of Premises

column 1	column 2	column 3
Use[4.165]	**Level of Assessment**[4.166]	**Assessment Criteria**
Caretakers Dwelling	Code Assessable	■ Point Lookout Tourist Zone Code ■ Caretakers Dwelling Code
Commercial Office	Code Assessable If in conjunction with a tourist accommodation use Otherwise - Impact Assessable	■ Point Lookout Tourist Zone Code ■ Access and Parking Code ■ Development Near Underground Infrastructure Code ■ Erosion Prevention and Sediment Control Code ■ Excavation and Fill Code ■ Infrastructure Works Code ■ Landscape Code ■ Stormwater Management Code
Display Dwelling	Code Assessable	■ Point Lookout Tourist Zone Code ■ Display Dwelling Code
Hotel	Code Assessable If in sub-area PT3 Otherwise - Impact Assessable	■ Point Lookout Tourist Zone Code ■ Access and Parking Code ■ Development Near Underground Infrastructure Code ■ Erosion Prevention and Sediment Control Code ■ Excavation and Fill Code ■ Infrastructure Works Code ■ Landscape Code ■ Stormwater Management Code
Minor Utility	Exempt	
Outdoor Dining	Code Assessable	■ Point Lookout Tourist Zone Code ■ Outdoor Dining Code
Park	Self-Assessable If - (1) Being undertaken by the local government; (2) On land in the ownership or control of the local government; (3) Complying with the assessment criteria being the acceptable solutions listed in column 3	■ Acceptable Solutions in section 6.20.4 of the Park Code ■ Acceptable Solutions of section 8.5.4 of the Development Near Underground Infrastructure Code

[4.165] See Part 9 - Schedule 3 - Dictionary, Division 1 - Uses.
[4.166] See Part 9 - Schedule 3 - Dictionary, Division 2 - Administrative Terms for a definition of level of assessment.

Point Lookout Tourist Zone - Table of Assessment for Material Change of Use of Premises

column 1	column 2	column 3
Use[4.165]	**Level of Assessment**[4.166]	**Assessment Criteria**
	Code Assessable If not self-assessable	■ Point Lookout Tourist Zone Code ■ Park Code ■ Access and Parking Code ■ Development Near Underground Infrastructure Code ■ Infrastructure Works Code ■ Landscape Code ■ Stormwater Management Code
Refreshment Establishment	Code Assessable If - (1) Not in sub-area PT7; (2) In conjunction with a tourist accommodation use Otherwise - Impact Assessable	■ Point Lookout Tourist Zone Code ■ Access and Parking Code ■ Development Near Underground Infrastructure Code ■ Erosion Prevention and Sediment Control Code ■ Excavation and Fill Code ■ Infrastructure Works Code ■ Landscape Code ■ Stormwater Management Code
Road	Exempt	
Shop	Code Assessable If in conjunction with a tourist accommodation use Otherwise - Impact Assessable	■ Point Lookout Tourist Zone Code ■ Access and Parking Code ■ Development Near Underground Infrastructure Code ■ Erosion Prevention and Sediment Control Code ■ Excavation and Fill Code ■ Infrastructure Works Code ■ Landscape Code ■ Stormwater Management Code
Telecommunications Facility	Self-Assessable If complying with the assessment criteria being the acceptable solutions listed in column 3 Code Assessable If not self-assessable	■ Acceptable Solutions in section 6.26.4 of the Telecommunications Facility Code ■ Acceptable Solutions in section 8.5.4 of the Development Near Underground Infrastructure Code ■ Acceptable Solutions in section 8.6.4 of the Erosion Prevention and Sediment Control Code ■ Acceptable Solutions A1.(1)(a)and(c) in section 7.6.4 of the Excavation and Fill Code ■ Point Lookout Tourist Zone Code ■ Telecommunications Facility Code ■ Access and Parking Code ■ Development Near Underground Infrastructure Code ■ Erosion Prevention and Sediment Control Code

Point Lookout Tourist Zone - Table of Assessment for Material Change of Use of Premises

column 1	column 2	column 3
Use[4.165]	**Level of Assessment**[4.166]	**Assessment Criteria**
		■ Excavation and Fill Code ■ Infrastructure Works Code ■ Landscape Code
Temporary Use	Self-Assessable If complying with the assessment criteria being the acceptable solutions listed in column 3 Code Assessable If not self-assessable	■ Acceptable Solutions in Section 6.27.4 of the Temporary Use Code ■ Point Lookout Tourist Zone Code ■ Temporary Use Code
Tourist Accommodation	Code Assessable If not in sub-area PT7 Otherwise - Impact Assessable	■ Point Lookout Tourist Zone Code ■ Tourist Accommodation Code ■ Access and Parking Code ■ Development Near Underground Infrastructure Code ■ Erosion Prevention and Sediment Control Code ■ Excavation and Fill Code ■ Infrastructure Works Code ■ Landscape Code ■ Stormwater Management Code
Tourist Park	Code Assessable If not in sub-area PT7 Otherwise - Impact Assessable	■ Point Lookout Tourist Zone Code ■ Tourist Park Code ■ Access and Parking Code ■ Development Near Underground Infrastructure Code ■ Erosion Prevention and Sediment Control Code ■ Excavation and Fill Code ■ Infrastructure Works Code ■ Landscape Code ■ Stormwater Management Code
Utility Installation	Code Assessable	■ Point Lookout Tourist Zone Code ■ Access and Parking Code ■ Development Near Underground Infrastructure Code ■ Erosion Prevention and Sediment Control Code ■ Excavation and Fill Code ■ Landscape Code ■ Stormwater Management Code
Defined uses not listed in column 1	Impact Assessable	

Point Lookout Tourist Zone - Table of Assessment for Material Change of Use of Premises

column 1	column 2	column 3
Use[4.165]	Level of Assessment[4.166]	Assessment Criteria
Defined uses listed in column 1 that do not comply with the level of assessment qualifications in column 2	Impact Assessable	
Uses not defined in Part 9 - Schedule 3 - Dictionary, Division 1 - Uses	Impact Assessable	

4.20.5 Point Lookout Tourist Zone - Table of Assessment for Other Development not associated with a Material Change of Use of Premises

Point Lookout Tourist Zone - Table of Assessment for Other Development

column 1	column 2	column 3
Other Development	**Level of Assessment**[4.167]	**Assessment Criteria**
Reconfiguration for -		
Creating lots by subdividing another lot by Standard Format Plan[4.168]	Impact Assessable	
Creating lots by subdividing another lot by - ■ Building Format Plan; or ■ Volumetric Format Plan	Code Assessable	■ Point Lookout Tourist Zone Code ■ Reconfiguration Code
■ Rearranging the boundaries of a lot by registering a plan of subdivision; or ■ Dividing land into parts by Agreement; or ■ Creating an easement giving access to a lot from a constructed road	Code Assessable	■ Reconfiguration Code
Building Work for -		
Communications Structures	Exempt If minor building work[4.169] Self-Assessable If - (1) Not exempt; (2) Complying with the assessment criteria being the acceptable solutions listed in column 3 Code Assessable If not self-assessable	■ Acceptable Solutions in section 7.2.4 of the Communications Structures Code ■ Communications Structures Code

[4.167] See Part 9 - Schedule 3 - Dictionary, Division 2 - Administrative Terms for a definition of level of assessment.
[4.168] Whether or not having a Community Management Statement.
[4.169] See Part 9 - Schedule 3 - Dictionary, Division 2 - Administrative Terms for a definition of minor building work.

Point Lookout Tourist Zone - Table of Assessment for Other Development

column 1	column 2	column 3
Other Development	**Level of Assessment**[4.167]	**Assessment Criteria**
Domestic Additions	Exempt If minor building work[4.169] Code Assessable If not exempt	■ Point Lookout Tourist Zone Code ■ Domestic Additions Code ■ Access and Parking Code ■ Development Near Underground Infrastructure Code ■ Erosion Prevention and Sediment Control Code ■ Excavation and Fill Code ■ Infrastructure Works Code ■ Stormwater Management Code
Domestic Outbuilding	Exempt If minor building work[4.169] Code Assessable If not exempt	■ Point Lookout Tourist Zone Code ■ Domestic Outbuilding Code ■ Development Near Underground Infrastructure Code ■ Erosion Prevention and Sediment Control Code ■ Excavation and Fill Code
On-site raising or relocation of an existing dwelling unit	Code Assessable	■ Point Lookout Tourist Zone Code ■ On-Site Raising and Relocation Code ■ Development Near Underground Infrastructure Code ■ Erosion Prevention and Sediment Control Code ■ Excavation and Fill Code ■ Infrastructure Works Code ■ Stormwater Management Code
Private Swimming Pool	Code Assessable	■ Point Lookout Tourist Zone Code ■ Private Swimming Pool Code ■ Development Near Underground Infrastructure Code ■ Erosion Prevention and Sediment Control Code ■ Excavation and Fill Code
Private Tennis Court	Code Assessable	■ Point Lookout Tourist Zone Code ■ Private Tennis Court Code ■ Erosion Prevention and Sediment Control Code ■ Excavation and Fill Code ■ Landscape Code

Point Lookout Tourist Zone - Table of Assessment for Other Development

column 1	column 2	column 3
Other Development	**Level of Assessment**[4.167]	**Assessment Criteria**
Operational Work for -		
Constructing a Domestic Driveway Crossover	Self-Assessable If complying with the assessment criteria being the acceptable solutions listed in column 3 Code Assessable If not self-assessable	■ Acceptable Solutions in section 7.4.4 of the Domestic Driveway Crossover Code ■ Domestic Driveway Crossover Code
Excavation and Fill	Exempt If - (1) Disturbing less than 50m^3 of soil; (2) A height/depth not exceeding 300mm measured from ground level Self-Assessable If - (1) Not exempt; (2) Complying with the assessment criteria being the acceptable solutions listed in column 3 Code Assessable If not self-assessable	■ Acceptable Solutions in section 8.6.4 of the Erosion Prevention and Sediment Control Code ■ Acceptable Solutions A1.(1)(a)and(c) in section 7.6.4 of the Excavation and Fill Code ■ Erosion Prevention and Sediment Control Code ■ Excavation and Fill Code
Placing an Advertising Device on Premises	Self-Assessable If complying with the assessment criteria being the acceptable solutions listed in column 3 Code Assessable If not self-assessable	■ Acceptable Solutions in section 7.1.4 of the Advertising Devices Code ■ Advertising Devices Code
Operational Work for Reconfiguring a Lot (by Standard Format Plan)	Code Assessable	■ Reconfiguration Code ■ Development Near Underground Infrastructure Code ■ Erosion Prevention and Sediment Control Code ■ Excavation and Fill Code ■ Infrastructure Works Code ■ Landscape Code ■ Stormwater Management Code
All other development not listed in column 1	Exempt	

4.20.6 Compliance with Point Lookout Tourist Zone Code

(1) Development that is consistent with the specific outcomes in section 4.20.8 complies with the Point Lookout Tourist Zone Code.

Note -

The following planning scheme policies will assist in achieving specific outcomes within the Point Lookout Tourist Zone Code -

- Planning Scheme Policy 5 - Environmental Emissions;
- Planning Scheme Policy 9 - Infrastructure Works;
- Planning Scheme Policy 12 - Social and Economic Impact Assessment.

4.20.7 Overall Outcomes for Point Lookout Tourist Zone Code

(1) The overall outcomes are the purpose of the Point Lookout Tourist Zone Code.

(2) The overall outcomes sought for the Point Lookout Tourist Zone Code are described by five key characteristics[4.170] -

(a) Uses and Other Development;
(b) Built Form and Density;
(c) Amenity;
(d) Environment;
(e) Infrastructure.

Each of these is detailed below.

(a) Uses and Other Development

(i) Various sub-areas provide tourist accommodation for Point Lookout's holiday population through predominantly integrated tourist uses with a range of accommodation types, such as serviced apartments, guesthouses, resort type units and related support facilities that -
a. are interspersed and sympathetically located amongst Point Lookout's natural landscape;
b. caters for the needs of short-stay guests through a range of accommodation types and standards;
c. are located in areas accessible to the natural and outdoor attractions of Point Lookout.

(ii) Sub-area PT7 - is intended for tourist accommodation uses that support the adjoining local centre zone. This could include a mobile home park or similar accommodation type for workers in tourism-related occupations.

(iii) Provide for a limited range of non tourist orientated uses that -
a. are complementary to integrated tourist facilities;
b. fulfill a tourist service need and provide opportunities for social interaction and activity;
c. are highly accessible to residents and tourists;
d. do not impact on the role and function of Point Lookout centres and residential areas.

(iv) Reconfiguration does not diminish the important role this zone plays in providing the opportunity to establish integrated tourist facilities.

(b) Built Form and Density

(i) Built form minimises visual impacts and prevents buildings from dominating the natural landscape and the surrounding streetscape by -
a. being compatible with the unique low-key coastal style of the area;
b. being low to mid-rise in nature;

[4.170] In combination, the overall outcomes in section 4.20.7 (2)(a)-(e) define the character of the Point Lookout Tourist Zone.

c. respecting the topographical features of each individual site by built form following the contours of the land and minimising disturbance of the natural ground form;
d. encouraging buildings that incorporate architectural styles and specific elements that are responsive to the Point Lookout style;
e. incorporating building elements that reduce the siting, mass, width, depth and bulk of the built form and being consistent with the lot size and style of Point Lookout;
f. considering the visually sensitive areas of Point Lookout such as the headland, Cylinder Beach and foreshore reserve areas.

(ii) The density of uses is compatible with achieving (2)(b)(i) recognising the need to efficiently use the limited sites zoned for integrated tourist uses at Point Lookout.

(c) Amenity

(i) Uses and other development achieves a high standard of tourist accommodation amenity by -
a. protecting and enhancing places of cultural significance or streetscape values that reinforce native vegetation as the significant streetscape experience of Point Lookout;
b. having access to natural light and ventilation, privacy, private and communal open space commensurate with the use;
c. providing a landscape setting that complements the natural setting and character of Point Lookout;
d. ensuring a variety of uses within an integrated tourist development are appropriately located;
e. eliminating or mitigating impacts associated with light, noise, air and traffic;
f. maintaining the safety of people and property;
g. improving pedestrian accessibility within the township by de-emphasising vehicular reliance.

(ii) The scale, operational attributes and impacts of non-residential uses maintains a high standard of tourist accommodation amenity in the zone.

(d) Environment

(i) Uses and other development minimises adverse impacts on environmental and scenic values by -
a. responding to topographical features;
b. minimising the need for excavation and fill;
c. protecting the site from erosion;
d. maintaining slopes with gradients greater than 1 in 4 in their natural undisturbed state;
e. minimising the impacts on the coastal environment;
f. maximising the preservation and enhancement of native plants;
g. encouraging the retention and reinstatement of native vegetation that can screen buildings;
h. maximising the use of planting species that are native and characteristic to Point Lookout;
i. incorporating best practice stormwater management solutions to protect natural drainage systems and enhancing water quality by maximising the permeability of the sand based island;
j. in sub-area PT7 - land is not released until an environmental impact statement is undertaken.

(e) Infrastructure

(i) Uses and other development -
a. make efficient use of existing infrastructure;
b. provide an appropriate level of infrastructure to service the development of the tourist accommodation areas;
c. provide for the extension of infrastructure in an orderly and cost effective manner through appropriate staging and construction that is tailored to the specific needs of Point Lookout;
d. do not result in unacceptable risk to community infrastructure.

(ii) Uses and other development are serviced by infrastructure including -
- a. reticulated water;
- b. reticulated sewerage; or
- c. where the site is not connected or are able to be connected to a reticulated sewerage system, wastewater is treated and disposed of on-site subject to site, soil and locational constraints;
- d. stormwater drainage that maximises use and protection of natural drainage systems;
- e. low-impact road systems that minimise impacts on native vegetation and natural drainage systems that utilise the permeability of the sand island;
- f. energy;
- g. telecommunications;
- h. waste and recycling collection.

(iii) Uses and other development reinforce an attractive, integrated and efficient and safe movement network that -
- a. incorporate a full range of modes including public transport, passenger vehicles, walking and cycling;
- b. provide pedestrian, cycle and vehicle connectivity and ease of mobility within the tourist zone and to other recreation, centre and adjoining local residential areas;
- c. maximise opportunities for the provision of pedestrian and cycle paths and reinforces pedestrian and cycle movement and encourages public transport as the dominant modes of travel within the township.

Note -

Summary of Point Lookout Tourist Zone sub-areas	
Sub-area	**Description**
Sub-area PT1	East Coast Road
Sub-area PT2	East Coast Road
Sub-area PT3	Point Lookout Hotel
Sub-area PT4	Mooloomba Road
Sub-area PT5	Mooloomba Road
Sub-area PT6	Samarinda Drive
Sub-area PT7	George Nothling Drive

4.20.8 Specific Outcomes and Probable Solutions applicable to Assessable Development

Assessable Development			
Specific Outcomes		**Probable Solutions**	
	Uses and Other Development -		
S1.1	Uses identified as inconsistent in Table 1 are not established in the zone.	**P1.1**	No probable solution identified.
S1.2	(1) Non-tourist accommodation uses - (a) only provide everyday needs and services to tourists and the local community without impacting on the role and function of Point Lookout centres; (b) results in positive economic and social benefits for the local community; (c) are located within integrated tourist accommodation uses. **Note -** Refer to Planning Scheme Policy 12 - Social and Economic Impact Assessment to assist in achieving S1.2	**P1.2**	(1) No probable solutions identified.
S1.3	(1) The following uses are encouraged - (a) tourist accommodation uses such as - (i) serviced apartments; (ii) guesthouses; (iii) holiday units and related support facilities; (2) In sub-area PT7 - mobile home park or similar accommodation type for workers in tourism-related occupations.	**P1.3**	(1) No probable solution identified; (2) No probable solution identified.
S1.4	(1) Reconfiguration - (a) maintains existing lot sizes to facilitate integrated tourist uses; (b) does not result in creation of standard format lots.	**P1.4**	(1) No probable solution identified.
	Built Form and Density -		
S2.1	(1) Building height in sub-areas PT1, PT3, PT4, PT5, PT6 and PT7 does not exceed - (a) 9.5 metres above ground level; (b) 6 metres above ground level to the floor level of the upper most habitable level;	**P2.1**	(1) No probable solution identified; (2) No probable solution identified; (3) No probable solution identified.

Assessable Development			
Specific Outcomes		**Probable Solutions**	
	(c) 1.5 metres above ground level to the floor level of the first habitable level; (d) 10.5 metres above ground level for roofs or pergolas covering decks. Decks extending from habitable areas have a maximum floor area of $15m^2$ in area for each detached building; or (2) Building heights in sub-area PT2 does not exceed - (a) 12 metres above ground level; (b) 7.8 metres above ground level to the floor level of the upper most habitable level; (c) 1.5 metres above ground level to the floor level of the first habitable level; (d) 14 metres above ground level for roofs and pergolas covering decks; (e) decks extending from habitable areas have a maximum area of $16m^2$, are unenclosed and are limited to one per site. (3) Buildings are constructed to respect the visual character of ridgelines and associated vegetation.		
S2.2	(1) Site coverage of an individual building does not exceed $150m^2$; (2) Permanently unenclosed spaces, which form part of or link individual buildings are permitted providing that the site coverage, including the unenclosed spaces does not exceed $175m^2$ for any site; (3) Site coverage in sub-areas PT1, PT3, PT5 and PT7 is limited to - (a) 40 percent for single storey buildings; or (b) 30 percent for 2 or more storey buildings; or (c) if open verandahs or balconies are attached to buildings and/or linking buildings are provided - (i) 45 percent for single storey buildings; or (ii) 35 percent for 2 or more storey buildings; or (4) Site coverage in sub-area PT2 is limited to - (a) 40 percent for buildings of 2 storeys or less; or	**P2.2**	(1) No probable solution identified; (2) No probable solution identified; (3) No probable solution identified; (4) No probable solution identified; (5) No probable solution identified; **Note -** Site coverage can be achieved by more than one building on site.

Assessable Development			
Specific Outcomes		**Probable Solutions**	
	(b) 30 percent for buildings of 3 storeys; or (c) if open verandahs or balconies are attached to buildings and/or linking buildings are provided - (i) 45 percent for buildings of 2 storeys or less; (ii) 35 percent for buildings having more than 2 storeys; or (5) Site coverage in sub-areas PT4 and PT6 is limited to - (a) 40 percent for single storey buildings; or (b) 35 percent for 2 or more storey buildings;		
S2.3	(1) Setbacks - (a) allow for design around mature native trees and the introduction of landscaping to complement the building bulk; (b) encourages development that complements the existing streetscape which is influenced by the earlier built form of Point Lookout; (c) side and rear setbacks provide separation between buildings and allow for privacy, landscaping to screen buildings, to control building bulk and open space; (d) maintain solar access to buildings.	**P2.3**	(1) Setbacks - (a) in sub-areas PT1, PT3, PT4, PT5, PT6 or PT7 are - (i) 6 metres to any street boundary; (ii) 2 metres to side boundaries; (iii) 6 metres from the rear boundary; or (b) Setbacks in sub-area PT2 are - (i) 8 metres to the street boundary; (ii) half the building height to the side boundaries; (iii) 3 metres to the rear boundary; (c) Detached buildings on the same lot are - (i) separated from each other by - a. a minimum of 4 metres in sub-areas PT1, PT3, PT4, PT5 or PT6; or b. in sub-area 2 a minimum of 4 metres or distance equal to the maximum height of the end elevation of the highest building which ever the greater; (ii) permitted to include open verandahs linking buildings at ground floor level.
S2.4	Uses and other development are limited to a density consistent with achieving the height, scale and setback specific outcomes.	**P2.4**	No probable solution identified.

Assessable Development			
Specific Outcomes		**Probable Solutions**	
S2.5	(1) Buildings are designed to reflect the sub-tropical climate through open frame architecture, including verandahs/decks and awnings, and (2) Building incorporate architectural elements that are responsive to the natural environment setting and tourist development form of Point Lookout, particularly the development form post 1996; (3) Buildings incorporate architectural elements that - (a) limit the maximum building length to - (i) 20 metres in sub-areas PT1, PT3, PT4, PT5, PT6 or PT7; (ii) 35 metres in sub-area PT2; (b) ensure roof eaves extend a minimum 800mm horizontally from the external wall except where pergolas or verandah roofs abut walls at eave height; (c) include verandahs or balconies that extend a minimum 30 percent of the building perimeter at each level; (d) include open construction verandah and balcony balustrades with a void/solid ratio of at least 50 percent.	**P2.5**	(1) No probable solution identified; (2) Architectural elements include - (a) a built form that incorporates the use of sheet material finishes such as timber and fire cement, for external cladding; (b) minimising building construction that is purely masonry with - (i) all masonry walls rendered and painted; or (ii) where constructed of island stone may be left in their natural state; (c) roofing - (i) that is of sheet materials; (ii) is of a colour that is not reflective, glare producing or visually obtrusive; (3) No probable solution identified. **Note -** Refer to Schedule 7 - Roof Colour Chart.
S3.1	Amenity - (1) Uses and other development establish an active interface with adjoining pedestrian spaces by - (a) ensuring active street frontages at ground level where commercial and retail uses are part of a mixed use; (b) providing outdoor dining that is orientated to the street or key vistas; (c) providing physical connections and linkages between buildings, and between buildings and public places, to encourage pedestrian movement; (d) locating car parking and service bays behind or under buildings to minimise their visual and physical intrusion on the streetscape.	**P3.1**	(1) No probable solution identified

Assessable Development			
Specific Outcomes		**Probable Solutions**	
S3.2	(1) Uses and other development are designed in accordance with the principles of Crime Prevention through Environmental Design (CPTED) to assist in crime prevention by being - (a) orientated towards the street to provide opportunities for casual surveillance of public places; (b) designed and well lit to ensure casual surveillance of car parking areas, and pedestrian and cycle paths.	**P3.2**	(1) No probable solution identified. **Note -** To assist in achieving S3.2 refer to Planning Scheme Policy 16 - Safer By Design.
S3.3	High quality landscaping treatments are incorporated to reinforce a sense of place and contribute to the overall attractiveness and function of the zone.	**P3.3**	No probable solution identified.
S3.4	(1) Uses and other development maintain a high standard of tourist amenity by - (a) locating air conditioning units and/or refrigeration units so that they are not visually obtrusive and do not cause adverse visual or noise impacts on adjoining premises; (b) locating carparking and servicing areas to minimise impacts on adjoining premises and the streetscape.	**P3.4**	(1) No probable solution identified.
S3.5	Uses and other development do not adversely impact on the cultural heritage values of a registered heritage place(s) or character precinct.	**P3.5**	No probable solution identified.
S3.6	(1) Tourist accommodation uses maximise privacy (visual and acoustic) through- (a) locating habitable room windows so they do not directly overlook habitable rooms of adjacent uses, either within or adjoining the use; (b) separating noise generating areas from sleeping areas.	**P3.6**	(1) No probable solution identified. **Note -** For additional assessment criteria for privacy requirements refer to the relevant use code.
S3.7	(1) Tourist accommodation uses ensure private and communal open space areas are – (a) clearly defined for their intended use and user;	**P3.7**	(1) No probable solution identified **Note -** For additional assessment criteria for

Assessable Development			
Specific Outcomes		**Probable Solutions**	
	(b) easily accessible from living or common areas; (c) useable in size and dimension; (d) of a suitable slope; (e) capable of receiving solar access.		open space requirements refer to the relevant use code.
S3.8	(1) Artificial lighting does not result in unreasonable disturbance to any person or activity; (2) Lighting is designed to avoid spilling onto adjoining residential zones and artificial light does not result in unreasonable disturbance to any person, activity or fauna; (3) Glare and reflection from the sun are minimised through material and glazing choice.	**P3.8**	(1) No probable solution identified; (2) Where adjoining the Point Lookout Residential Zone the vertical illumination resulting from direct, reflected or other incidental light emanating from the site does not exceed 8 lux when measured at any point 1.5 metres outside the boundary at or above ground level; (3) No probable solution identified.
S3.9	Air quality impacts are eliminated or mitigated to a level that is compatible with an island tourist environment.	**P3.9**	No probable solution identified.
S3.10	(1) Where adjoining a residential zone, non-residential uses and other development are located, and designed to reduce noise impacts.	**P3.10**	(1) The use or other development does not generate noise, measured as the $L_{Amax,adj,T}$ parameter, at the boundary of the nearest residential zone, greater than - (a) 5dB(A) above the background noise level between 7am to 10 pm; or (b) 3dB(A) above the background noise level between 10 pm to 7 am. **Note -** ■ The $L_{Amax,adj,T}$ parameter is defined in the *Noise Measurement Manual* (Environmental Protection Agency, 2000); ■ Refer to Part 11 - Planning Scheme Policy 5 - Environmental Emissions for further information on noise and air quality impacts.
	Environment -		
S4.1	(1) Uses and other development maximise the retention or reinstatement of native plants within the development site and adjoining road reserve by - (a) buildings being sited on the lot to allow for retention or reinstatement of native	**P4.1**	(1) No probable solution identified; (2) Native species used for landscape and streetscape planting are selected from Part 9 - (a) Schedule 9 - Street Trees where within the road reserve;

Assessable Development			
Specific Outcomes		**Probable Solutions**	
	plants in an area of the site comprising not less than - (i) 35 percent of the site for sub-areas PT1, PT2, PT3, PT4, PT6 or PT7; or (ii) 20 percent of the site for sub-area PT5; (b) native vegetation is to be retained/reinstated within the setback areas wherever possible, with priority given to the front boundary setback where it can screen buildings; (c) screening buildings; (d) the minimum width of a landscaped area is 3 metres; and the minimum single landscaped area is $10m^2$; (e) retain where possible, existing mature trees located in all areas within the site where considered to be of environmental or scenic value by facility of building site design; (f) protect and enhance native vegetation as the significant streetscape experience of Point Lookout; (2) Species used for landscape and streetscape planting are native to the local area.		(b) Schedule 10 - Vegetation Species List.
S4.2	(1) Development minimises the need for excavation and fill by being located and designed to - (a) prevent the unnecessary removal of existing native plants; (b) protect natural drainage systems; (c) protect the amenity of adjoining properties; (d) reduce erosion and sediment run-off.	**P4.2**	(1) No probable solution identified. **Note -** Refer to Part 7 Division 6 - Excavation and Fill for assessment criteria where the site requires earthworks.
S4.3	(1) Protect the environment from impacts associated with the use or other development, including - (a) stormwater run-off; (b) erosion and sediment run-off; (c) water quality; (d) weed infestation.	**P4.3**	(1) No probable solution identified.

Assessable Development			
Specific Outcomes		**Probable Solutions**	
S4.4	(1) Fences - (a) are not located forward of the front building line; (b) have a maximum height of 1.5 metres; (c) are of open timber construction.	**P4.4**	(1) No probable solution identified.
S4.5	Buildings respect the visual character of ridgelines and associated vegetation where viewed from roads and other public places.	**P4.5**	No probable solution identified.
	Infrastructure -		
S5.1	(1) Infrastructure is provided in an orderly and cost effective manner that meets the nominated level of service for the Island and minimises disturbance and adverse impacts on the coastal environment.	**P5.1**	(1) No probable solution identified
S5.2	(1) Uses and other development are serviced by urban infrastructure including - (a) reticulated water; (b) reticulated sewerage; or (c) where the site is not connected or not able to be connected to a reticulated sewerage system, wastewater - (i) is treated and disposed of on-site subject to site, soil and locational constraints; (ii) reduces the potential for - a. contaminating groundwater, surface water or wetland environments; b. risks to reticulated water supply and public health; (d) stormwater management systems - (i) utilise existing natural overland flow and drainage paths; (ii) incorporate measures to reduce stormwater quantity and manage stormwater quality; (e) constructed road access; (f) energy; (g) telecommunications; (h) waste and recycling collection facilities.	**P5.2**	(1) No probable solution identified.

Assessable Development			
Specific Outcomes		**Probable Solutions**	
S5.3	(1) Uses and other development - (a) maximises opportunities to provide on-site and to upgrade off-site pedestrian and cycle paths through - (i) clearly defined on-site cycle paths and facilities; (ii) provision for cycle spaces; (b) minimises the need for constructed internal road networks; (c) minimises the number and width of entry points to the site; (d) minimise impacts on adjoining residential areas; (e) provide for integrated car parking and service delivery areas; (f) ensures pedestrian and cycle movement networks and encourages public transport that maximises connectivity and permeability throughout the township and that maximises access to beaches and reserves while reducing reliance on private vehicles.	**P5.3**	(1) No probable solution identified. **Note -** Refer to Part 8 - ■ Division 7 - Infrastructure Works Code for further information on provision, design and construction of utility infrastructure, roads and pedestrian and cycle paths; ■ Division 9 - Stormwater Management Code for requirements on roof and surface drainage.
S5.4	(1) Driveways and vehicle crossovers are designed to minimise the removal of any existing street trees located within the road reserve; (2) Driveways, car parking areas and uncovered paved or hard landscaped areas are constructed from permeable materials, where possible, and to maintain natural drainage flows and maximise stormwater infiltration on-site.	**P5.4**	(1) Car parking, driveways and turning areas are not located in side or rear setback areas. (2) No probable solution identified. **Note -** No vegetation is removed prior to commencement of construction without local government approval in accordance with *Local Law 6 - Protection of Vegetation*.
S5.5	(1) Waste and recycling is managed to minimise impacts on the environment and nearby premises by - (a) locating waste and recycling storage areas to protect amenity and to provide safe manual handling of containers; (b) screening waste and recycling container storage areas from view; (c) providing for the cleansing of containers in a manner that	**P5.5**	(1) No probable solution identified. (2) No probable solution identified. (3) No probable solution identified. **Note -** Refer to Part 11 - Planning Scheme Policy 9 - Infrastructure Works – Chapter 16 – Waste Management for further information on waste and recycling container volume, storage, servicing, screening and cleansing. Refer to Part 8 - Division 1 - Access

Assessable Development			
Specific Outcomes		Probable Solutions	
	does not cause adverse environmental impacts; (2) Uses and other development - (a) provide safe and efficient manoeuvring for waste collection vehicles; (b) ensure all bulk waste and recycling containers are serviced off-street and not on roads with public access; (c) ensure sufficient vertical clearance for container servicing; (d) ensure unobstructed access to containers by collection vehicles; (3) Waste and recycling storage is designed and located to - (a) provide adequate container volume to contain the waste and recyclables; (b) provide recycle containers in an equivalent or greater volume to waste containers; (c) provide a dedicated waste and recycling container storage area that is convenient and safe to use; (d) ensure containers are located on impermeable surfaces.		and Parking Code for waste collection vehicle servicing and manoeuvring assessment criteria.
S5.6	Community infrastructure is able to function effectively during and immediately after flood events.	**P5.6**	Community infrastructure is located at or above the recommended flood levels in Table 2 - Recommended Flood Levels for Community Infrastructure.

Table 1 - Inconsistent Uses and Other Development

Inconsistent Uses
Aged Persons and Special Needs Housing
Agriculture
Animal Keeping
Airport
Apartment Building
Bed and Breakfast
Brothel
Bulky Goods Showroom
Car Wash Facility
Cemetery
Child Care Centre
Commercial Office - where not in conjunction with tourist accommodation use
Display and Sales Activity
Drive Through Restaurant
Dual Occupancy
Dwelling House
Emergency Services
Extractive Industry
Forestry
Funeral Parlour
Garden Centre
General Industry
Heavy Industry
High Impact Industry
Home Business
Hospital
Indoor Recreation Facility - except where in conjunction with tourist accommodation use
Institution
Intensive Agriculture
Landscape Supply Depot
Marine Services
Mobile Home Park - except in sub-area PT7
Multiple Dwellings
Night Club - except where in conjunction with tourist accommodation use
Outdoor Recreation Facility - except where in conjunction with tourist accommodation use
Passenger Terminal
Place of Worship
Produce Store
Relatives Apartment
Retail Warehouse
Roadside Stall
Rural Enterprise
Service Industry
Service Station
Small Lot House
Vehicle Depot
Vehicle Parking Station
Vehicle Repair Premises
Veterinary Surgery
Warehouse
Inconsistent Other Development
Creating lots by subdividing another lot by Standard Format Plan (whether or not having a Community Management Statement)

Table 2 - Recommended Flood Levels for Community Infrastructure

Type of Community Infrastructure	Recommended Flood Level AEP (ARI)
Emergency services, other than police facilities	0.2% (1 in 500 year ARI)
Emergency shelters	0.5% (1 in 500 year ARI)
Police facilities	0.5% (1 in 500 year ARI)
Hospitals and associated facilities	0.2% (1 in 500 year ARI)
Stores of valuable records or items of historic or cultural significance such as galleries and libraries	0.5% (1 in 500 year ARI)
Power stations	0.2% (1 in 500 year ARI)
Major switch yards	0.2% (1 in 500 year ARI)
Substations	0.5% (1 in 500 year ARI)
Sewerage treatment plants	1% (1 in 500 year ARI)
Water treatment plants	0.5% (1 in 500 year ARI)
■ State-controlled roads ■ Works of an electricity entity not otherwise listed in this table ■ Railway lines, stations and associated facilities ■ Aviation facilities ■ Communication network facilities	No specific recommended flood level but development proponents should ensure that the infrastructure is optimally located and designed to achieve suitable levels of service, having regard to the processes and policies of the administering government agency.

Reference - *State Planning Policy Guideline 1/03: Mitigating the Adverse Impacts of Flood, Bushfire and Landslide*.

Division 21 - Rural Non-Urban Zone

4.21.1 Introduction

(1) This division contains the provisions for the Rural Non-Urban Zone. They are -

(a) The Rural Non-Urban Zone Tables of Assessment, that incorporates -
- (i) Levels of assessment for development in the Rural Non-Urban Zone (section 4.21.2);
- (ii) Assessment criteria for development in the Rural Non-Urban Zone (section 4.21.3);
- (iii) Rural Non-Urban Zone - Table of Assessment for Material Change of Use of Premises (section 4.21.4);
- (iv) Rural Non-Urban Zone - Table of Assessment for Other Development not associated with a Material Change of Use of Premises (section 4.21.5).

(b) The Rural Non-Urban Zone Code, that incorporates -
- (i) Compliance with the Rural Non-Urban Zone Code (section 4.21.6);
- (ii) Overall Outcomes for the Rural Non-Urban Zone Code (section 4.21.7);
- (iii) Specific Outcomes and Probable Solutions applicable to Assessable Development (section 4.21.8).

4.21.2 Levels of assessment for development in the Rural Non-Urban Zone

(1) Sections 4.21.4 and 4.21.5 identify the level of assessment for development in the Rural Non-Urban Zone, as follows -

(a) section 4.21.4 Rural Non-Urban Zone - Table of Assessment for Making a Material Change of Use of Premises[4.171] -
- (i) column 1 identifies uses that are exempt, self-assessable or assessable;
- (ii) column 2 identifies the level of assessment for the uses listed in column 1;
- (iii) the use is impact assessable where -
  - a. it is defined in Schedule 3 - Dictionary, Division 1 - Uses and is not listed in column 1; or
  - b. it is listed in column 1 and does not comply with the level of assessment qualifications listed in column 2; or
  - c. it is not defined in Schedule 3 - Dictionary, Division 1 - Uses.

(b) section 4.21.5 Rural Non-Urban Zone - Table of Assessment for Other Development not associated with a Material Change of Use of Premises -
- (i) column 1 identifies other development that is exempt, self-assessable or assessable;
- (ii) column 2 identifies the level of assessment for other development listed in column 1;
- (iii) where the other development is not listed in column 1 it is exempt.

(2) Overlays may alter the level of assessment identified in (1)(a) and (b)[4.172].

[4.171] Works associated with an application for a material change of use of premises may be assessed together with the material change of use.

[4.172] Refer to Part 5 - Overlays to determine the level of assessment for the use or other development where an Overlay affects the lot and Part 1, section 1.2.5(10)(f) that explains how the highest level of assessment applies.

4.21.3 Assessment criteria for development in the Rural Non-Urban Zone

(1) Development in the Rural Non-Urban Zone is assessed against the assessment criteria listed in column 3 of sections 4.21.4 and 4.21.5, as follows -

(a) acceptable solutions of applicable codes for self-assessable development; or

(b) applicable codes for code assessable development.

(2) Self-assessable development that does not comply with all the acceptable solutions of the applicable codes is assessable development. Non compliance with only the acceptable solutions for self-assessable development in relation to setbacks and site cover under the QDC or nominated "Alternative Provisions" or Building Assessment Provisions will not elevate the level of assessment of a proposal from self assessable development to assessable development under the Redlands Planning Scheme. In these instances, the local government will undertake the functions of a referral agency with Concurrence Agency jurisdiction under IPA to assess and determine these matters.

(3) Impact assessable development will be assessed against all relevant provisions of the Redlands Planning Scheme.

Note -

- The level of assessment indicated within section 4.21.4 - Rural Non Urban Zone - Table of Assessment for Material Change of Use of Premises may be affected by Division 2 of the Regulatory Provisions of the *SEQ Regional Plan 2005 - 2026.*
- The level of assessment for reconfiguration as indicated within section 4.21.5 - Rural Non Urban Zone - Table of Assessment for Other Development not associated with a Material Change of Use of Premises, where within the Regional Landscape and Rural Production Area or Investigation Area of the *SEQ Regional Plan 2005 - 2026* -
  - complies with Division 3 of the Regulatory Provisions;
  - has a minimum lot size of 100 hectares, unless the subdivision meets an exclusion documented in Division 3.

Note -

Summary of Rural Non-Urban Zone sub-areas	
Sub-area	**Description**
Sub-area RN1	Redland Bay Road, Capalaba
Sub-area RN2	Main Road, Wellington Point
Sub-area RN3	Southern Moreton Bay Islands (SMBI)

4.21.4 Rural Non-Urban Zone - Table of Assessment for Material Change of Use of Premises

Rural Non-Urban Zone - Table of Assessment for Material Change of Use of Premises

column 1	column 2	column 3
Use[4.173]	**Level of Assessment**[4.174]	**Assessment Criteria**
Agriculture	Self-Assessable If - (1) Not in sub-area - (a) RN1; or (b) RN3 (2) Complying with the assessment criteria being the acceptable solutions listed in column 3 Code Assessable If - (1) Not self-assessable; (2) Not in sub-area RN1 Otherwise - Impact Assessable	■ Acceptable Solutions in section 6.2.4 of the Agriculture Code ■ Rural Non-Urban Zone Code ■ Agriculture Code ■ Access and Parking Code ■ Infrastructure Works Code ■ Stormwater Management Code
Animal Keeping	Code Assessable	■ Rural Non-Urban Zone Code ■ Animal Keeping Code ■ Access and Parking Code ■ Infrastructure Works Code ■ Stormwater Management Code
Bed and Breakfast	Self-Assessable If - (1) Not in sub-area RN3; (2) Complying with the assessment criteria being the acceptable solutions listed in column 3 Code Assessable If not self-assessable	■ Acceptable Solutions in section 6.5.4 of the Bed and Breakfast Code ■ Rural Non-Urban Zone Code ■ Bed and Breakfast Code ■ Infrastructure Works Code ■ Landscape Code
Caretakers Dwelling	Code Assessable	■ Rural Non-Urban Zone Code ■ Caretakers Dwelling Code
Community Facility	Code Assessable	■ Rural Non-Urban Zone Code ■ Access and Parking Code ■ Development Near Underground Infrastructure Code ■ Erosion Prevention and Sediment Control Code

[4.173] See Schedule 3 - Dictionary, Division 1 - Uses.
[4.174] See Schedule 3 - Dictionary, Division 2 - Administrative Terms for a definition of level of assessment.

Rural Non-Urban Zone - Table of Assessment for Material Change of Use of Premises

column 1	column 2	column 3
Use[4.173]	**Level of Assessment**[4.174]	**Assessment Criteria**
		■ Excavation and Fill Code ■ Infrastructure Works Code ■ Landscape Code ■ Stormwater Management Code
Display Dwelling	Code Assessable	■ Rural Non-Urban Zone Code ■ Display Dwelling Code
Dwelling House	Self-Assessable If - (1) Not in sub-area - (a) RN2; or (b) RN3; (2) Complying with the assessment criteria being the acceptable solutions listed in column 3 **Note -** Non-compliance with the acceptable solutions for self assessable development in relation to setbacks, site cover and built to boundary walls, or nominated "Alternative Provisions" or Building Assessment Provisions identified in the Dwelling House Code will not elevate the level of assessment of a proposal from self assessable development to assessable development under the Redlands Planning Scheme. Refer to section 6.11.2 of the Dwelling House Code. Code Assessable If - (1) Not self-assessable; (2) Not in sub-area RN2 Otherwise - Impact Assessable	■ Acceptable Solutions in section 6.11.5 of the Dwelling House Code ■ Acceptable Solutions in section 8.5.4 of the Development Near Underground Infrastructure Code ■ Acceptable Solutions in section 7.4.4 of the Domestic Driveway Crossover Code ■ Acceptable Solutions in section 8.6.4 of the Erosion Prevention and Sediment Control Code ■ Acceptable Solutions A1.(1)(a) and (c) in section 7.6.4 of the Excavation and Fill Code ■ Rural Non-Urban Zone Code ■ Dwelling House Code ■ Domestic Driveway Crossover Code ■ Development Near Underground Infrastructure Code ■ Erosion Prevention and Sediment Control Code ■ Excavation and Fill Code ■ Infrastructure Works Code ■ Stormwater Management Code
Estate Sales Office	Code Assessable	■ Rural Non-Urban Zone Code ■ Estate Sales Office Code ■ Access and Parking Code ■ Development Near Underground Infrastructure Code

Rural Non-Urban Zone - Table of Assessment for Material Change of Use of Premises

column 1	column 2	column 3
Use[4.173]	**Level of Assessment**[4.174]	**Assessment Criteria**
Forestry	Code Assessable	■ Rural Non-Urban Zone Code ■ Forestry Code ■ Access and Parking Code
Home Business	Self-Assessable If complying with the assessment criteria being the acceptable solutions listed in column 3 Code Assessable If not self-assessable	■ Acceptable Solutions in section 6.15.4 of the Home Business Code ■ Rural Non-Urban Zone Code ■ Home Business Code ■ Access and Parking Code And where being carried out in a domestic outbuilding - ■ Domestic Outbuilding Code ■ Development Near Underground Infrastructure Code ■ Erosion Prevention and Sediment Control Code ■ Excavation and Fill Code
Intensive Agriculture	Code Assessable If - (1) Not in sub-area - (a) RN1; or (b) RN2; or (c) RN3 Otherwise - Impact Assessable	■ Rural Non-Urban Zone Code ■ Intensive Agriculture Code ■ Access and Parking Code ■ Infrastructure Works Code ■ Stormwater Management Code
Minor Utility	Exempt	
Park	Self-Assessable If - (1) Being undertaken by the local government; (2) On land in the ownership or control of the local government; (3) Complying with the assessment criteria being the acceptable solutions listed in column 3 Code Assessable If not self-assessable	■ Acceptable Solutions in section 6.20.4 of the Park Code ■ Acceptable Solutions of section 8.5.4 of the Development Near Underground Infrastructure Code ■ Rural Non-Urban Zone Code ■ Park Code ■ Access and Parking Code ■ Development Near Underground Infrastructure Code ■ Infrastructure Works Code ■ Landscape Code

Rural Non-Urban Zone - Table of Assessment for Material Change of Use of Premises

column 1	column 2	column 3
Use[4.173]	**Level of Assessment**[4.174]	**Assessment Criteria**
		■ Stormwater Management Code
Produce Store	Code Assessable	■ Rural Non-Urban Zone Code ■ Access and Parking Code ■ Development Near Underground Infrastructure Code ■ Erosion Prevention and Sediment Control Code ■ Excavation and Fill Code ■ Infrastructure Works Code ■ Landscape Code ■ Stormwater Management Code
Relatives Apartment	Self-Assessable If - (1) Not in sub-area - (a) RN2; or (b) RN3; (2) Complying with the assessment criteria being the acceptable solutions listed in column 3 Code Assessable If - (1) Not self-assessable; (2) Not in sub-area RN2 Otherwise - Impact Assessable	■ Acceptable Solutions in section 6.21.4 of the Relatives Apartment Code ■ Acceptable Solutions in section 8.5.4 of the Development Near Underground Infrastructure Code ■ Acceptable Solutions in section 8.6.4 of the Erosion Prevention and Sediment Control Code ■ Acceptable Solutions A1.(1)(a) and (c) in section 7.6.4 of the Excavation and Fill Code ■ Rural Non-Urban Zone Code ■ Relatives Apartment Code ■ Development Near Underground Infrastructure Code ■ Erosion Prevention and Sediment Control Code ■ Excavation and Fill Code ■ Stormwater Management Code
Road	Exempt	
Roadside Stall	Code Assessable If - (1) Not in sub-area - (a) RN1; or (b) RN2 Otherwise - Impact Assessable	■ Rural Non-Urban Zone Code ■ Roadside Stall Code ■ Access and Parking Code ■ Development Near Underground Infrastructure Code ■ Infrastructure Works Code
Rural Enterprise	Code Assessable	■ Rural Non-Urban Zone Code ■ Rural Enterprise Code ■ Access and Parking Code ■ Development Near Underground Infrastructure Code ■ Erosion Prevention and Sediment Control Code ■ Excavation and Fill Code

Rural Non-Urban Zone - Table of Assessment for Material Change of Use of Premises

column 1	column 2	column 3
Use[4.173]	**Level of Assessment**[4.174]	**Assessment Criteria**
		■ Infrastructure Works Code ■ Landscape Code ■ Stormwater Management Code
Telecommunications Facility	Self-Assessable If complying with the assessment criteria being the acceptable solutions listed in column 3 Code Assessable If not self-assessable	■ Acceptable Solutions in section 6.26.4 of the Telecommunications Facility Code ■ Acceptable Solutions in section 8.5.4 of the Development Near Underground Infrastructure Code ■ Acceptable Solutions in section 8.6.4 of the Erosion Prevention and Sediment Control Code ■ Acceptable Solutions A1(1)(a) and (c) in section 7.6.4 of the Excavation and Fill Code ■ Rural Non-Urban Zone Code ■ Telecommunications Facility Code ■ Access and Parking Code ■ Development Near Underground Infrastructure Code ■ Erosion Prevention and Sediment Control Code ■ Excavation and Fill Code ■ Infrastructure Works Code ■ Landscape Code
Temporary Use	Self-Assessable If - (1) Not in sub-area - (a) RN1; or (b) RN2; or (c) RN3; (2) Complying with the assessment criteria being the acceptable solutions listed in column 3; Code Assessable If - (1) Not self-assessable; (2) Not in sub-area - (a) RN1; or (b) RN2; or (c) RN3 Otherwise - Impact Assessable	■ Acceptable Solutions in section 6.27.4 of the Temporary Use Code ■ Rural Non-Urban Zone Code ■ Temporary Use Code

Rural Non-Urban Zone - Table of Assessment for Material Change of Use of Premises

column 1	column 2	column 3
Use[4.173]	**Level of Assessment**[4.174]	**Assessment Criteria**
Utility Installation	Code Assessable	■ Rural Non-Urban Zone Code ■ Access and Parking Code ■ Development Near Underground Infrastructure Code ■ Erosion Prevention and Sediment Control Code ■ Excavation and Fill Code ■ Landscape Code ■ Stormwater Management Code
Defined uses not listed in column 1	Impact Assessable	
Defined uses listed in column 1 that do not comply with the level of assessment qualifications in column 2	Impact Assessable	
Uses not defined in Part 9 - Schedule 3 - Dictionary, Division 1 - Uses	Impact Assessable	

4.21.5 Rural Non-Urban Zone - Table of Assessment for Other Development not associated with a Material Change of Use of Premises

Rural Non-Urban Zone - Table of Assessment for Other Development

column 1	column 2	column 3
Other Development	**Level of Assessment**[4.175]	**Assessment Criteria**
Reconfiguration for -		
Creating lots by subdividing another lot by Standard Format Plan[4.176]	Code Assessable If not in sub-area RN3 Otherwise - Impact Assessable	■ Rural Non-Urban Zone Code ■ Reconfiguration Code ■ Development Near Underground Infrastructure Code ■ Excavation and Fill Code ■ Infrastructure Works Code ■ Stormwater Management Code
Creating lots by subdividing another lot by - ■ Building Format Plan; or ■ Volumetric Format Plan	Code Assessable	■ Rural Non-Urban Zone Code ■ Reconfiguration Code
■ Rearranging the boundaries of a lot by registering a plan of subdivision; or ■ Dividing land into parts by Agreement; or ■ Creating an easement giving access to a lot from a constructed road	Code Assessable	■ Reconfiguration Code
Building Work for -		
Communications Structures	Exempt If minor building work[4.177] Self-Assessable If - (1) Not exempt; (2) Complying with the assessment criteria being the acceptable solutions listed in column 3 Code Assessable If not self-assessable	■ Acceptable Solutions in section 7.2.4 of the Communications Structures Code ■ Communications Structures Code

[4.175] See Schedule 3 - Dictionary, Division 2 - Administrative Terms for a definition of level of assessment.
[4.176] Whether or not having a Community Management Statement.
[4.177] See Schedule 3 - Dictionary, Division 2 - Administrative Terms for a definition of minor building work.

Rural Non-Urban Zone - Table of Assessment for Other Development

column 1	column 2	column 3
Other Development	**Level of Assessment**[4.175]	**Assessment Criteria**
Domestic Additions	Exempt If minor building work[4.177] Self-Assessable If - (1) Not exempt; (2) Complying with the assessment criteria being the acceptable solutions listed in column 3 **Note -** Non-compliance with the acceptable solutions for self assessable development in relation to setbacks, site cover and built to boundary walls, or nominated "Alternative Provisions" or Building Assessment Provisions identified in the Domestic Additions Code will not elevate the level of assessment of a proposal from self assessable development to assessable development under the Redlands Planning Scheme. Refer to section 7.3.2 of the Domestic Additions Code. Code Assessable If - (1) Not self-assessable; (2) The building height is - (a) 8.5 metres or less above ground level; (b) 2 storey or less Otherwise - Impact Assessable	■ Acceptable Solutions in section 7.3.5 of the Domestic Additions Code ■ Acceptable Solutions in section 8.5.4 of the Development Near Underground Infrastructure Code ■ Acceptable Solutions in section 8.6.4 of the Erosion Prevention and Sediment Control Code ■ Acceptable Solutions A1.(1)(a) and (c) in section 7.6.4 of the Excavation and Fill Code ■ Rural Non-Urban Zone Code ■ Domestic Additions Code ■ Development Near Underground Infrastructure Code ■ Erosion Prevention and Sediment Control Code ■ Excavation and Fill Code ■ Infrastructure Works Code ■ Stormwater Management Code
Domestic Outbuilding	Exempt If minor building work[4.177] Self-Assessable If - (1) Not exempt; (2) Complying with the assessment criteria being the acceptable solutions listed in column 3	■ Acceptable Solutions in section 7.5.5 of the Domestic Outbuilding Code ■ Acceptable Solutions in section 8.5.4 of the Development Near Underground Infrastructure Code ■ Acceptable Solutions in section 8.6.4 of the Erosion Prevention and Sediment Control Code ■ Acceptable Solutions A1.(1)(a)

Rural Non-Urban Zone - Table of Assessment for Other Development

column 1	column 2	column 3
Other Development	**Level of Assessment**[4.175]	**Assessment Criteria**
	Note - Non-compliance with the acceptable solutions for self assessable development in relation to setbacks, site cover and built to boundary walls, or nominated "Alternative Provisions" or Building Assessment Provisions identified in the Domestic Outbuilding Code will not elevate the level of assessment of a proposal from self assessable development to assessable development under the Redlands Planning Scheme. Refer to section 7.5.2 of the Domestic Outbuilding Code. Code Assessable If not self-assessable	and(c) in section 7.6.4 of the Excavation and Fill Code ■ Rural Non-Urban Zone Code ■ Domestic Outbuilding Code ■ Development Near Underground Infrastructure Code ■ Erosion Prevention and Sediment Control Code ■ Excavation and Fill Code
On-site raising or relocation of an existing dwelling unit	Self-Assessable If complying with the assessment criteria being the acceptable solutions listed in column 3 **Note -** Non-compliance with the acceptable solutions for self assessable development in relation to setbacks, site cover and built to boundary walls, or nominated "Alternative Provisions" or Building Assessment Provisions identified in the On-site Raising or Relocation Code will not elevate the level of assessment of a proposal from self assessable development to assessable development under the Redlands Planning Scheme. Refer to section 7.7.2 of the On-site Raising or Relocation Code.	■ Acceptable Solutions in section 7.7.5 of the On-Site Raising or Relocation Code ■ Acceptable Solutions in section 8.5.4 of the Development Near Underground Infrastructure Code ■ Acceptable Solutions in section 8.6.4 of the Erosion Prevention and Sediment Control Code ■ Acceptable Solutions A1.(1)(a) and (c) in section 7.6.4 of the Excavation and Fill Code

Rural Non-Urban Zone - Table of Assessment for Other Development

column 1	column 2	column 3
Other Development	**Level of Assessment**[4.175]	**Assessment Criteria**
	Code Assessable If - (1) Not self-assessable; (2) The building height is - (a) 8.5 metres or less above ground level; (b) 2 storey or less Otherwise - Impact Assessable	■ Rural Non-Urban Zone Code ■ On-Site Raising and Relocation Code ■ Development Near Underground Infrastructure Code ■ Erosion Prevention and Sediment Control Code ■ Excavation and Fill Code ■ Infrastructure Works Code ■ Stormwater Management Code
Private Swimming Pool	Self-Assessable If complying with the assessment criteria being the acceptable solutions listed in column 3 **Note -** Non-compliance with the acceptable solutions for self assessable development in relation to setbacks, and access and parking, or nominated "Alternative Provisions" or Building Assessment Provisions identified in the Private Swimming Pool Code will not elevate the level of assessment of a proposal from self assessable development to assessable development under the Redlands Planning Scheme. Refer to section 7.8.2 of the Private Swimming Pool Code. Code Assessable If not self-assessable	■ Acceptable Solutions in section 7.8.5 of the Private Swimming Pool Code ■ Private Swimming Pool Code ■ Development Near Underground Infrastructure Code ■ Erosion Prevention and Sediment Control Code ■ Excavation and Fill Code
Private Tennis Court	Self-Assessable If – (1) Not in sub-area RN2; (2) If complying with the assessment criteria being the acceptable solutions listed in column 3 Code Assessable If not in sub-area RN2	■ Acceptable Solutions in section 7.9.4 of the Private Tennis Court Code ■ Acceptable Solutions in section 8.6.4 of the Erosion Prevention and Sediment Control Code ■ Acceptable Solutions A1.(1)(a) and (c) in section 7.6.4 of the Excavation and Fill Code ■ Private Tennis Court Code ■ Erosion Prevention and Sediment Control Code ■ Excavation and Fill Code

Rural Non-Urban Zone - Table of Assessment for Other Development

column 1	column 2	column 3
Other Development	**Level of Assessment**[4.175]	**Assessment Criteria**
	Otherwise - Impact Assessable	■ Landscape Code
Operational Work for -		
Constructing a Domestic Driveway Crossover	Self-Assessable If complying with the assessment criteria being the acceptable solutions listed in column 3 Code Assessable If not self-assessable	■ Acceptable Solutions in section 7.4.4 of the Domestic Driveway Crossover Code ■ Domestic Driveway Crossover Code
Excavation and Fill	Exempt If - (1) Disturbing less than 50m^3 of soil; (2) A height/depth not exceeding 300mm measured from ground level Self-Assessable If - (1) Not exempt; (2) Complying with the assessment criteria being the acceptable solutions listed in column 3 Code Assessable If not self-assessable	■ Acceptable Solutions in section 8.6.4 of the Erosion Prevention and Sediment Control Code ■ Acceptable Solutions A1.(1)(b),(c),(d) in section 7.6.4 of the Excavation and Fill Code ■ Erosion Prevention and Sediment Control Code ■ Excavation and Fill Code
Placing an Advertising Device on Premises	Self-Assessable If complying with the assessment criteria being the acceptable solutions listed in column 3 Code Assessable If not self-assessable	■ Acceptable Solutions in section 7.1.4 of the Advertising Devices Code ■ Advertising Devices Code
Operational Work for Reconfiguring a Lot (by Standard Format Plan)	Code Assessable	■ Reconfiguration Code ■ Development Near Underground Infrastructure Code ■ Erosion Prevention and Sediment Control Code ■ Excavation and Fill Code ■ Infrastructure Works Code ■ Landscape Code ■ Stormwater Management Code

Rural Non-Urban Zone - Table of Assessment for Other Development

column 1	column 2	column 3
Other Development	**Level of Assessment**[4.175]	**Assessment Criteria**
Private Waterfront Structure	Code Assessable If not in sub-area RN3 Otherwise - Impact Assessable	■ Private Waterfront Structure Code ■ Development Near Underground Infrastructure Code ■ Erosion Prevention and Sediment Control Code ■ Excavation and Fill Code
All other development not listed in column 1	Exempt	

4.21.6 Compliance with Rural Non-Urban Zone Code

(1) Development that is consistent with the specific outcomes in section 4.21.8 complies with the Rural Non-Urban Zone Code.

Note -

The following planning scheme policies will assist in achieving Specific Outcomes within the Rural Non-Urban Zone Code -

- Planning Scheme Policy 4 - Ecological Impacts;
- Planning Scheme Policy 5 - Environmental Emissions;
- Planning Scheme Policy 9 - Infrastructure Works;
- Planning Scheme Policy 11 - Rural Lands and Uses.

4.21.7 Overall Outcomes for Rural Non-Urban Zone

(1) The overall outcomes are the purpose of the Rural Non-Urban Zone Code.

(2) The overall outcomes sought for the Rural Non-Urban Zone Code are described by five key characteristics[4.178] -

(a) Uses and Other Development;
(b) Built Form and Density;
(c) Amenity;
(d) Environment;
(e) Infrastructure.

Each of these is detailed below.

(a) Uses and Other Development

(i) Provide for uses that -
a. promote productive rural activities that rely on the use of the land including traditional and emerging rural activities;
b. provide opportunity for aligned uses to co-locate with traditional and emerging rural activities;
c. encourage enjoyment of the rural environment including recreational and tourism uses that contribute to the public and private landscape network of the planning scheme area;
d. recognise identified extractive resources;
e. generate employment and economic activities from tourism opportunities;
f. are protected from the encroachment of incompatible uses.

(ii) Provide for a limited range of residential uses that -
a. consist of detached dwelling houses on large individual lots;
b. do not compromise the operation of rural employment and economic activities.

(iii) Sub-area RN1 is identified as a location -
a. for small scale home businesses that require large lots and appropriate separation from urban areas;
b. that contains and adjoins areas with environmental values.

(iv) Sub-area RN2 is identified as a location that retains separation between urban areas by promoting differing types of built form that recognise -
a. the maintenance of views to land at the rear of sub-area RN2 that is zoned Open Space and Conservation;
b. opportunities for alternative uses that maintain a connection to horticultural activities.

[4.178] In combination, the overall outcomes in section 4.21.7 (2)(a)-(e) define the character of the Rural Non-Urban Zone.

(v) Sub-area RN3 is identified as a location that -
   a. is suitable for a limited range of rural and low-key tourism uses;
   b. maintains the safety of people and property by not locating buildings below the 1 percent AEP (1 in 100 year ARI) flood level and storm tide level.

(vi) Reconfiguration -
   a. does not result in the fragmentation of productive rural land;
   b. in sub-area RN3 - maintains or amalgamates current lots sizes with no additional lots being created.

(b) Built Form and Density

(i) The scale of uses and other development positively contribute to the maintenance of a rural environment by -
   a. being designed and sited in a manner that recognises and protects the surrounding landscape setting;
   b. limiting building height to maintain a low-rise appearance;
   c. buildings having recognisable elements in relation to siting, width, depth and bulk that are consistent with lot size and landscape setting.

(ii) The density of uses and other development -
   a. is characterised by a predominance of land being used for rural purposes and associated rural structures on large lots;
   b. utilise existing buildings and structures for new activities that do not involve multiple tenancies.

(iii) Buildings incorporate a mix of materials that are responsive to local conditions and styles.

(c) Amenity

(i) Uses and other development achieve a high standard of rural amenity by -
   a. maintaining the regionally significant scenic quality and landscape values of the rural areas in the planning scheme area;
   b. protecting and enhancing places of cultural significance;
   c. having access to natural light and ventilation, privacy and private open space commensurate with the use;
   d. providing a landscape setting that complements the rural nature of development;
   e. mitigating impacts associated with light, noise, air and traffic to a level commensurate to a productive rural environment.

(ii) Uses are compatible with the maintenance of a high standard of rural amenity that is characterised by -
   a. the retention of scenic landscapes and vistas;
   b. productive rural lands;
   c. native plants and waterways;
   d. buildings and other structures minimising visual impacts on the landscape.

(d) Environment

(i) Uses and other development minimise adverse impacts on environmental and scenic values by -
   a. responding to topographical features;
   b. minimising the need for excavation and fill;
   c. protecting the site from erosion;
   d. maximising the retention of native plants;
   e. maximising the use of native plants that are characteristic to the area;
   f. protecting, managing and enhancing environmental corridors;
   g. incorporating best practice stormwater management and enhancing water quality.

(e) Infrastructure

(i) Uses and other development -
a. make efficient use of existing infrastructure;
b. provide for the extension of infrastructure in an orderly and cost effective manner;
c. do not result in unacceptable risk to community infrastructure.

(ii) Uses and other development are serviced by infrastructure including -
a. reticulated water or adequate potable water supply;
b. reticulated sewerage; or
c. where the site is not able to be connected to a reticulated sewerage system, wastewater is treated and disposed of on-site subject to site, soil and locational constraints;
d. constructed roads that are low impact and that provide all weather access;
e. stormwater management;
f. energy;
g. telecommunications;
h. waste and recycling collection facilities.

(iii) Uses manage the generation, storage and disposal and recycling of waste to a standard commensurate with the operational activities of the use.

Note -

Summary of Rural Non-Urban Zone Sub-areas	
Sub-area	**Description**
Sub-area RN1	Redland Bay Road, Capalaba
Sub-area RN2	Main Road, Wellington Point
Sub-area RN3	Southern Moreton Bay Islands (SMBI)

4.21.8 Specific Outcomes and Probable Solutions applicable to Assessable Development

Assessable Development			
Specific Outcomes		**Probable Solutions**	
	Uses and Other Development -		
S1.1	Uses and other development identified as inconsistent in Table 1 are not established or undertaken in the zone.	**P1.1**	No probable solution identified.
S1.2	(1) Uses and other development include those that - (a) promote traditional and emerging rural activities such as - (i) agriculture - including horticulture and grazing; (ii) intensive agriculture - including poultry and , hydroponics; (iii) rural enterprises for value adding and processing of primary produce; (iv) small-scale service industries that serve rural activities; (b) are compatible with rural uses and are readily able to co-locate within buffers or on land with traditional rural activities; (c) encourage enjoyment of the rural landscape including tourist and recreational uses; (d) are small-scale traditional cottage industries that are managed and operated by the residents, such as timber work, pottery or similar crafts; (e) involve the winning of extractive resources; (f) provide for a limited range of residential uses that - (i) are in the form of detached dwelling houses on larger lot sizes; (ii) do not compromise the operation of bonafide rural activities.	**P1.2**	(2) No probable solution identified. **Note -** For additional assessment criteria refer to the following or any other relevant use code in Part 6 - ■ Division 2 - Agriculture Code ■ Division 5 - Bed and Breakfast Code ■ Division 13 - Extractive Industry Code ■ Division 14 - Forestry Code ■ Division 16 - Intensive Agriculture Code ■ Division 22 - Roadside Stall Code ■ Division 23 - Rural Enterprise Code ■ Division 28 - Tourist Accommodation Code ■ Division 29 - Tourist Park Code
S1.3	(1) Uses and other development address locational requirements in - (a) sub-area RN1 - encourage small-scale home business operations that are consistent with the environmental values of adjoining lands; (b) sub-area RN2 - is identified	**P1.3**	(1) No probable solution identified.

Assessable Development			
Specific Outcomes		**Probable Solutions**	
	as a location that retains separation between urban areas by promoting differing types of built form that recognises - (i) the maintenance of views to land at the rear of sub-area RN2 that is zoned Open Space and Conservation; (ii) opportunities for alternative uses that maintain a connection to horticultural activities; (c) sub-area RN3 - promotes a limited range of rural and low-key tourism uses.		
S1.4	(1) Reconfiguration - (a) does not result in the fragmentation of productive rural land; (b) in sub-area RN3 - maintains or enlarges current lot sizes with no additional lots being created.	**P1.4**	(1) No probable solution identified. **Note -** Refer to Part 7 - Division 11 - Reconfiguration.
	Built Form and Density -		
S2.1	(1) Uses and other development achieve a built form that is consistent with the rural environment through consideration of - (a) building heights that sit within rather than dominate the landscape setting; (b) setbacks for buildings and structures to - (i) enhance views along the movement network in recognition of a dual role as tourist drives; (ii) assist in ameliorating potentially incompatible uses from existing and future rural activities expected in the zone; (c) site coverage that facilitates expected uses while not dominating the landscape; (d) where service industries are not provided in a building as separate tenancies or any sub-let parts of the premises.	**P2.1**	(1) Buildings and structures - (a) have an overall height that does not exceed - (i) 8.5 metres above ground level; or (ii) as required to facilitate a productive rural activity; (b) are setback - (i) for a lot or premises less than 2 hectares - a minimum of 10 metres from all boundaries; or (ii) for a lot or premises greater than 2 hectares - a. a minimum of 20 metres from all boundaries; or b. a minimum of 10 metres from all boundaries if screened by planted landscaping; or (iii) in sub-area RN1 - for non-residential buildings or structures associated with small scale home business operations - a. a minimum of 50 metres from the road frontage; or b. a minimum of 30

Assessable Development			
Specific Outcomes		**Probable Solutions**	
			metres and screened from the road frontage by planted landscaping; (c) site coverage does not exceed - (i) 2.5 percent; or (ii) in sub-area RN1 - 10 percent; or (iii) in sub-area RN2 - 20 percent; or (iv) in sub-area RN3 - 10 percent.
S2.2	(1) Buildings, uses and other development are designed and sited to - (a) maintain the rural landscape setting; (b) facilitate the ongoing use of existing or potential future uses of productive rural lands.	**P2.2**	(1) No probable solution identified.
S2.3	(1) Residential and tourist building design incorporates architectural elements that - (a) exhibit a high degree of interest through the use of colour, angles and materials; (b) include verandahs, decks, eaves, window hoods or similar elements to create shade and cast shadow; (c) promote an attractive environmental setting; (d) provide attractive facades that contribute to the rural setting and experience of passers-by; (2) Other uses have a functional built form typical of a productive rural environment.	**P2.3**	(1) No probable solution identified; (2) No probable solution identified.
S2.4	(1) Fencing does not inhibit the movement of native animals - (a) within the lot or premises; (b) to external areas.	**P2.4**	(1) No probable solution identified. **Note -** Refer to Part 11 - Planning Scheme Policy 4 - Ecological Impacts for specific fauna friendly fencing criteria.
	Amenity **-**		
S3.1	Uses and other development do not adversely impact on the cultural heritage values of a registered heritage place(s) or character precinct.	**P3.1**	No probable solution identified.

Assessable Development			
Specific Outcomes		**Probable Solutions**	
S3.2	(1) Artificial lighting does not result in unreasonable disturbance to any person, activity or fauna; (2) Glare and reflection from the sun are minimised through material and glazing choice.	**P3.2**	(1) No probable solution identified; (2) No probable solution identified.
S3.3	(1) Noise generated by the use or other development is compatible with that experienced in a productive rural environment.	**P3.3**	(1) Noise emissions comply with the following - (a) comply with Table 2 - Noise levels at the boundary of the lot or premises, except for uses that rely on external activities such as agriculture; or (b) for an Environmentally Relevant Activity, comply with any approval issued under the *Environmental Protection Act 1994*.
S3.4	Air quality impacts are eliminated or mitigated to a level that is compatible with a productive rural environment.	**P3.4**	No probable solution identified.
S3.5	Traffic movements are compatible with that experienced in a productive rural environment.	**P3.5**	No probable solution identified. **Note -** Refer to Part 11 - Planning Scheme Policy 5 - Environmental Emissions for further information on noise and air quality impacts.
	Environment -		
S4.1	(1) Protect the environment from impacts associated with the use or other development including - (a) stormwater run-off; (b) water quality; (c) erosion and sediment run-off; (d) weed infestation.	**P4.1**	(1) No probable solution identified.
S4.2	(1) Minimise the need for excavation and fill by uses and other development being located and designed to - (a) prevent the unnecessary removal of native plants; (b) protect overland drainage flows; (c) reduce erosion and sediment run-off; (d) protect the amenity of adjoining properties; (e) not impede the movement of native animals.	**P4.2**	(1) No probable solution identified. **Note -** Refer to Part 7 - Division 6 - Excavation and Fill Code for specific assessment criteria.

Assessable Development			
Specific Outcomes		**Probable Solutions**	
S4.3	(1) Landscaping and revegetation - (a) incorporates plants that are native to the local area; (b) recognises and enhances the landscape setting of the local area; (c) supports the retention and rehabilitation of enhancement areas and corridors, (d) maximises use of permeable surfaces and landscaping to reduce stormwater run-off; (e) incorporates landscaping as a component of the stormwater management system.	**P4.3**	(1) Species used for landscaping and revegetation are selected from the native plant species listed in Part 9 - (a) Schedule 9 - Street Trees for landscaping within the road reserve; (b) Schedule 10 - Vegetation Species List. **Note -** For additional assessment criteria, refer to Part 8 - ■ Division 8 - Landscape Code; ■ Division 9 - Stormwater Management Code.
	Infrastructure -		
S5.1	(1) Uses and other development are provided with - (a) reticulated water; or (b) an adequate potable water supply where the site is not connected or able to be serviced by reticulated water.	**P5.1**	(1) Where connection to a reticulated water supply system is not available, dwellings are provided with potable water supply capacity of at least 20,000 litres.
S5.2	(1) Uses and other development are provided with - (a) reticulated sewerage; or (b) where not able to be connected to a reticulated sewerage system, wastewater - (i) is treated and disposed of on-site subject to site, soil and locational constraints; (ii) reduces the potential for - a. contaminating groundwater, surface water or wetland environments; b. risks to reticulated water supply and public health; (c) stormwater management systems that - (i) utilise existing overland systems; (ii) incorporate measures to reduce stormwater quantity and improve stormwater quality; (d) constructed road access that minimise removal of native plants and the concentration of stormwater runoff; (e) energy; (f) telecommunications;	**P5.2**	(1) No probable solution identified.

Assessable Development			
Specific Outcomes		**Probable Solutions**	
	(g) waste and recycling collection.		
S5.3	(1) Waste and recycling is managed to minimise impacts on the environment and nearby premises by - (a) locating waste and recycling storage areas to protect amenity and to provide safe manual handling of containers; (b) screening waste and recycling container storage areas from view; (c) providing for the cleansing of containers in a manner that does not cause adverse environmental impacts; (2) Uses and other development - (a) provide safe and efficient manoeuvring for waste collection vehicles; (b) ensure all bulk waste and recycling containers are serviced off-street and not on roads with public access; (c) ensure sufficient vertical clearance for container servicing; (d) ensure unobstructed access to containers by collection vehicles; (3) Waste and recycling storage is designed and located to - (a) provide adequate container volume to contain the waste and recyclables; (b) provide recycle containers in an equivalent or greater volume to waste containers; (c) provide a dedicated waste and recycling container storage area that is convenient and safe to use; (d) ensure containers are located on impermeable surfaces.	**P5.3**	(1) No probable solution identified. (2) No probable solution identified. (3) No probable solution identified. **Note -** Refer to Part 11 - Planning Scheme Policy 9 - Infrastructure Works – Chapter 16 – Waste Management for further information on waste and recycling container volume, storage, servicing, screening and cleansing. Refer to Part 8 - Division 1 - Access and Parking Code for waste collection vehicle servicing and manoeuvring assessment criteria.
S5.4	Community infrastructure is able to function effectively during and immediately after flood events.	**P5.4**	Community infrastructure is located at or above the recommended flood levels in Table 3 - Recommended Flood Levels for Community Infrastructure.

Table 1 - Inconsistent Uses or Other Development

Inconsistent Uses
Aged Persons and Special Needs Housing - except in sub-area RN3
Airport - in sub-area RN1, sub-area RN2 and sub-area RN3
Apartment Building
Brothel
Bulky Goods Showroom
Car Wash Facility
Cemetery - in sub-area RN1, sub-area RN2 and sub-area RN3
Child Care Centre
Commercial Office
Display and Sale Activity
Drive Through Restaurant
Dual Occupancy
Education Facility
Extractive Industry - in sub-area RN1, sub-area RN2 and sub-area RN3
Funeral Parlour
General Industry - except where food processing of primary produce; or in sub-area RN1, sub-area RN2 and sub-area RN3
Health Care Centre - in sub-area RN1, sub-area RN2 and sub-area RN3
Heavy Industry - except where food processing of primary produce; or in sub-area RN1, sub-area RN2 and sub-area RN3
High Impact Industry
Hospital - in sub-area RN1, sub-area RN2 and sub-area RN3
Hotel
Indoor Recreation Facility - in sub-area RN1; or where not catering primarily for tourist activities or recreational pursuits that have a direct connection with the rural, natural or resource values of the area
Institution
Intensive Agriculture - in sub-area RN1; or in sub-area RN2 and sub-area RN3 - excluding horticulture
Marine Services
Mobile Home Park
Multiple Dwelling
Night Club
Outdoor Dining
Outdoor Recreation Facility - in sub-area RN1; or where not catering primarily for tourist activities or recreational pursuits that have a direct connection with the rural, natural or resource values of the area
Passenger Terminal
Place of Worship - in sub-area RN1, sub-area RN2 and sub-area RN3
Refreshment Establishment - where having more than 100m² gross floor area
Relatives Apartment - in sub-area RN2
Retail Warehouse
Roadside Stall - in sub-area RN1 and sub-area RN2
Service Industry - where having more than 200m^2 gross floor area
Service Station
Shop
Small Lot House
Tourist Accommodation - in sub-area RN1 and sub-area RN2
Tourist Park - in sub-area RN1 and sub-area RN2
Vehicle Depot - in sub-area RN3
Vehicle Parking Station
Vehicle Repair Premises - in sub-area RN2 and sub-area RN3
Veterinary Surgery
Warehouse
Inconsistent Other Development
Creating lots by subdividing another lot by a Standard Format Plan (whether or not having a Community Management Statement) - in sub-area RN3

Table 2 - Noise levels at the boundary of the lot or premises

Period	Noise level at the boundary of the lot or premises[1]
7am - 10pm	Background noise level plus 8 dB(A)
10pm - 7am	Background noise level plus 5 dB(A)

Note [1] - Measured as the adjusted maximum sound pressure level $L_{Amax,adj,T}$ - as defined in the *Noise Measurement Manual* (Environmental Protection Agency, 2000)

Table 3 - Recommended Flood Levels for Community Infrastructure

Type of Community Infrastructure	Recommended Flood Level AEP (ARI)
Emergency services, other than police facilities	0.2% (1 in 500 year ARI)
Emergency shelters	0.5% (1 in 200 year ARI)
Police facilities	0.5% (1 in 200 year ARI)
Hospitals and associated facilities	0.2% (1 in 500 year ARI)
Stores of valuable records or items of historic or cultural significance, such as galleries and libraries	0.5% (1 in 200 year ARI)
Power stations	0.2% (1 in 500 year ARI)
Major switch yards	0.2% (1 in 500 year ARI)
Substations	0.5% (1 in 200 year ARI)
Sewerage treatment plants	1% (1 in 100 year ARI)
Water treatment plants	0.5% (1 in 200 year ARI)
■ State-controlled roads ■ Works of an electricity entity not otherwise listed in this table ■ Railway lines, stations and associated facilities ■ Aviation facilities ■ Communication network facilities	No specific recommended flood level but development proponents should ensure that the infrastructure is optimally located and designed to achieve suitable levels of service, having regard to the processes and policies of the administering government agency.

Reference - *State Planning Policy Guideline 1/03: Mitigating the Adverse Impacts of Flood, Bushfire and Landslide.*

this page purposely
left blank

Division 22 - SMBI Centre Zone

4.22.1 Introduction

(1) This division contains the provisions for the SMBI Centre Zone. They are -

(a) The SMBI Centre Zone Tables of Assessment, that incorporates -
- (i) Levels of assessment for development in the SMBI Centre Zone (section 4.22.2);
- (ii) Assessment criteria for development in the SMBI Centre Zone (section 4.22.3);
- (iii) SMBI Centre Zone - Table of Assessment for Material Change of Use of Premises (section 4.22.4);
- (iv) SMBI Centre Zone - Table of Assessment for Other Development not associated with a Material Change of Use of Premises (section 4.22.5).

(b) The SMBI Centre Zone Code, that incorporates -
- (i) Compliance with the SMBI Centre Zone Code (section 4.22.6);
- (ii) Overall Outcomes for the SMBI Centre Zone Code (section 4.22.7);
- (iii) Specific Outcomes and Probable Solutions applicable to Assessable Development (section 4.22.8).

4.22.2 Levels of assessment for development in the SMBI Centre Zone

(2) Sections 4.22.4 and 4.22.5 identify the level of assessment for development in the SMBI Centre Zone, as follows -

(a) section 4.22.4 SMBI Centre Zone - Table of Assessment for Making a Material Change of Use of Premises[4.179] -
- (i) column 1 identifies uses that are exempt, self-assessable or assessable;
- (ii) column 2 identifies the level of assessment for the uses listed in column 1;
- (iii) The use is impact assessable where -
  - a. it is defined in Part 9 - Schedule 3 - Dictionary, Division 1 - Uses and is not listed in column 1; or
  - b. it is listed in column 1 and does not comply with the level of assessment qualifications listed in column 2; or
  - c. it is not defined in Part 9 - Schedule 3 - Dictionary, Division 1 - Uses.

(b) section 4.22.5 SMBI Centre Zone - Table of Assessment for Other Development not associated with a Material Change of Use of Premises -
- (i) column 1 identifies other development that is exempt, self-assessable or assessable;
- (ii) column 2 identifies the level of assessment for other development listed in column 1;
- (iii) where the other development is not listed in column 1 it is exempt.

(3) Overlays may alter the level of assessment identified in (1)(a) and (b)[4.180].

[4.179] Works associated with an application for a material change of use of premises may be assessed together with the material change of use.

[4.180] Refer to Part 5 - Overlays to determine the level of assessment for the use or other development where an Overlay affects the lot and Part 1, section 1.2.5(10)(f) that explains how the highest level of assessment applies.

4.22.3 Assessment criteria for development in the SMBI Centre Zone

(1) Development in the SMBI Centre Zone is assessed against the assessment criteria listed in column 3 of sections 4.22.4 and 4.22.5, as follows -

(a) acceptable solutions of applicable codes for self-assessable development; or

(b) applicable codes for code assessable development.

(2) Self-assessable development that does not comply with all the acceptable solutions of the applicable codes is assessable development.

(3) Impact assessable development will be assessed against all relevant provisions of the Redlands Planning Scheme.

Note -

- The level of assessment indicated within section 4.22.4 - SMBI Centre Zone - Table of Assessment for Material Change of Use of Premises may be affected by Division 2 of the Regulatory Provisions of the *SEQ Regional Plan 2005 - 2026.*
- The level of assessment for reconfiguration as indicated within section 4.22.5 - SMBI Centre Zone -Table of Assessment for Other Development not associated with a Material Change of Use of Premises, where within the Regional Landscape and Rural Production Area or Investigation Area of the *SEQ Regional Plan 2005 - 2026* -
  - Complies with Division 3 of the Regulatory Provisions;
  - Has a minimum lot size of 100 hectares, unless the subdivision meets an exclusion documented in Division 3.

4.22.4 SMBI Centre Zone - Table of Assessment for Material Change of Use of Premises

SMBI Centre Zone - Table of Assessment for Material Change of Use of Premises

column 1	column 2	column 3
Use[4.181]	**Level of Assessment**[4.182]	**Assessment Criteria**
Bed and Breakfast	Code Assessable If not in sub-area SC1 Otherwise - Impact Assessable	■ SMBI Centre Zone Code ■ Bed and Breakfast Code ■ Infrastructure Works Code ■ Landscape Code
Caretakers Dwelling	Code Assessable	■ SMBI Centre Zone Code ■ Caretakers Dwelling Code
Child Care Centre	Code Assessable If not in sub-area SC1 Otherwise - Impact Assessable	■ SMBI Centre Zone Code ■ Child Care Centre Code ■ Access and Parking Code ■ Development Near Underground Infrastructure Code ■ Erosion Prevention and Sediment Control Code ■ Excavation and Fill Code ■ Infrastructure Works Code ■ Landscape Code ■ Stormwater Management Code
Commercial Office	Self-Assessable If complying with the assessment criteria being the acceptable solutions listed in column 3 Code Assessable If not self-assessable	■ Acceptable Solutions in section 8.2.4 of the Centre Activity Code ■ SMBI Centre Zone Code ■ Access and Parking Code ■ Development Near Underground Infrastructure Code ■ Erosion Prevention and Sediment Control Code ■ Excavation and Fill Code ■ Infrastructure Works Code ■ Landscape Code ■ Stormwater Management Code
Community Facility	Code Assessable	■ SMBI Centre Zone Code ■ Access and Parking Code ■ Development Near Underground Infrastructure Code ■ Erosion Prevention and Sediment Control Code ■ Excavation and Fill Code ■ Infrastructure Works Code ■ Landscape Code ■ Stormwater Management Code

[4.181] See Schedule 3 - Dictionary, Division 1 - Uses.
[4.182] See Schedule 3 - Dictionary, Division 2 - Administrative Terms for a definition of level of assessment.

SMBI Centre Zone - Table of Assessment for Material Change of Use of Premises

column 1	column 2	column 3
Use[4.181]	**Level of Assessment**[4.182]	**Assessment Criteria**
Dual Occupancy	Code Assessable If - (1) Not in sub-area SC1; or (2) The use is undertaken as part of a mixed use development Otherwise - Impact Assessable	■ SMBI Centre Zone Code ■ Dual Occupancy Code ■ Development Near Underground Infrastructure Code ■ Domestic Driveway Crossover Code ■ Erosion Prevention and Sediment Control Code ■ Excavation and Fill Code ■ Infrastructure Works Code ■ Landscape Code ■ Stormwater Management Code
Education Facility	Code Assessable If not in sub-area SC1 Otherwise - Impact Assessable	■ SMBI Centre Zone Code ■ Access and Parking Code ■ Development Near Underground Infrastructure Code ■ Erosion Prevention and Sediment Control Code ■ Excavation and Fill Code ■ Infrastructure Works Code ■ Landscape Code ■ Stormwater Management Code
Emergency Services	Code Assessable	■ SMBI Centre Zone Code ■ Access and Parking Code ■ Development Near Underground Infrastructure Code ■ Erosion Prevention and Sediment Control Code ■ Excavation and Fill Code ■ Infrastructure Works Code ■ Landscape Code ■ Stormwater Management Code
Estate Sales Office	Self-Assessable If complying with the assessment criteria being the acceptable solutions listed in column 3 Code Assessable If not self-assessable	■ Acceptable Solutions in section 6.12.4 of the Estate Sales Office Code ■ SMBI Centre Zone Code ■ Estate Sales Office Code ■ Access and Parking Code ■ Development Near Underground Infrastructure Code
Garden Centre	Code Assessable	■ SMBI Centre Zone Code ■ Access and Parking Code ■ Development Near Underground Infrastructure Code ■ Erosion Prevention and Sediment Control Code ■ Excavation and Fill Code ■ Infrastructure Works Code

SMBI Centre Zone - Table of Assessment for Material Change of Use of Premises

column 1	column 2	column 3
Use[4.181]	**Level of Assessment**[4.182]	**Assessment Criteria**
		■ Landscape Code ■ Stormwater Management Code
Health Care Centre	Self-Assessable If complying with the assessment criteria being the acceptable solutions listed in column 3 Code Assessable If not self-assessable	■ Acceptable Solutions in section 8.2.4 of the Centre Activity Code ■ SMBI Centre Zone Code ■ Access and Parking Code ■ Development Near Underground Infrastructure Code ■ Erosion Prevention and Sediment Control Code ■ Excavation and Fill Code ■ Infrastructure Works Code ■ Landscape Code ■ Stormwater Management Code
Home Business	Self-Assessable If complying with the assessment criteria being the acceptable solutions listed in column 3 Code Assessable If not self-assessable	■ Acceptable Solutions in section 6.15.4 of the Home Business Code ■ SMBI Centre Zone Code ■ Home Business Code ■ Access and Parking Code And where being carried out in a Domestic Outbuilding - ■ Domestic Outbuilding Code ■ Development Near Underground Infrastructure Code ■ Erosion Prevention and Sediment Control Code ■ Excavation and Fill Code
Minor Utility	Exempt	
Multiple Dwelling	Code Assessable If - (1) Not in sub-area SC1; or (2) The use is undertaken as part of a mixed use development Otherwise - Impact Assessable	■ SMBI Centre Zone Code ■ Multiple Dwelling Code ■ Access and Parking Code ■ Development Near Underground Infrastructure Code ■ Erosion Prevention and Sediment Control Code ■ Excavation and Fill Code ■ Infrastructure Works Code ■ Landscape Code ■ Stormwater Management Code

SMBI Centre Zone - Table of Assessment for Material Change of Use of Premises

column 1	column 2	column 3
Use[4.181]	**Level of Assessment**[4.182]	**Assessment Criteria**
Outdoor Dining	Code Assessable	■ SMBI Centre Zone Code ■ Outdoor Dining Code
Park	Self-Assessable If - (1) Being undertaken by the local government; (2) On land in the ownership or control of the local government; (3) Complying with the assessment criteria being the acceptable solutions listed in column 3 Code Assessable If not self-assessable	■ Acceptable Solutions in section 6.20.4 of the Park Code ■ Acceptable Solutions of section 8.5.4 of the Development Near Underground Infrastructure Code ■ SMBI Centre Zone Code ■ Park Code ■ Access and Parking Code ■ Development Near Underground Infrastructure Code ■ Infrastructure Works Code ■ Landscape Code ■ Stormwater Management Code
Refreshment Establishment	Self-Assessable If complying with the assessment criteria being the acceptable solutions listed in column 3 Code Assessable If not self-assessable	■ Acceptable Solutions in section 8.2.4 of the Centre Activity Code ■ SMBI Centre Zone Code ■ Access and Parking Code ■ Development Near Underground Infrastructure Code ■ Erosion Prevention and Sediment Control Code ■ Excavation and Fill Code ■ Infrastructure Works Code ■ Landscape Code ■ Stormwater Management Code
Road	Exempt	
Service Industry	Self-Assessable If complying with the assessment criteria being the Acceptable Solutions listed in column 3 Code Assessable If 100m^2 or less gross floor area	■ Acceptable Solutions identified in section 8.2.4 of the Centre Activity Code ■ SMBI Centre Zone Code ■ Access and Parking Code ■ Development Near Underground Infrastructure Code ■ Erosion Prevention and Sediment Control Code

SMBI Centre Zone - Table of Assessment for Material Change of Use of Premises

column 1	column 2	column 3
Use[4.181]	**Level of Assessment**[4.182]	**Assessment Criteria**
	Otherwise - Impact Assessable	■ Excavation and Fill Code ■ Infrastructure Works Code ■ Landscape Code ■ Stormwater Management Code
Shop	Self-Assessable If complying with the assessment criteria being the acceptable solutions listed in column 3 Code Assessable If not self-assessable	■ Acceptable Solutions in section 8.2.4 of the Centre Activity Code ■ SMBI Centre Zone Code ■ Access and Parking Code ■ Development Near Underground Infrastructure Code ■ Erosion Prevention and Sediment Control Code ■ Excavation and Fill Code ■ Infrastructure Works Code ■ Landscape Code ■ Stormwater Management Code
Telecommunications Facility	Self-Assessable If complying with the assessment criteria being the acceptable solutions listed in column 3 Code Assessable If not self-assessable	■ Acceptable Solutions in section 6.26.4 of the Telecommunications Facility Code ■ Acceptable Solutions in section 8.5.4 of the Development Near Underground Infrastructure Code ■ Acceptable Solutions in section 8.6.4 of the Erosion Prevention and Sediment Control Code ■ Acceptable Solutions A1.(1)(a) and (c) in section 7.6.4 of the Excavation and Fill Code ■ SMBI Centre Zone Code ■ Telecommunications Facility Code ■ Access and Parking Code ■ Development Near Underground Infrastructure Code ■ Erosion Prevention and Sediment Control Code ■ Excavation and Fill Code ■ Infrastructure Works Code ■ Landscape Code
Temporary Use	Self-Assessable If complying with the assessment criteria being the acceptable solutions listed in column 3 Code Assessable If not self-assessable	■ Acceptable Solutions in section 6.27.4 of the Temporary Use Code ■ SMBI Centre Zone Code ■ Temporary Use Code

SMBI Centre Zone - Table of Assessment for Material Change of Use of Premises

column 1	column 2	column 3
Use[4.181]	**Level of Assessment**[4.182]	**Assessment Criteria**
Tourist Accommodation	Code Assessable If - (1) Not in sub-area SC1; or (2) The use is undertaken as part of a mixed use development Otherwise - Impact Assessable	■ SMBI Centre Zone Code ■ Tourist Accommodation Code ■ Access and Parking Code ■ Development Near Underground Infrastructure Code ■ Erosion Prevention and Sediment Control Code ■ Excavation and Fill Code ■ Infrastructure Works Code ■ Landscape Code ■ Stormwater Management Code
Utility Installation	Code Assessable	■ SMBI Centre Zone Code ■ Access and Parking Code ■ Development Near Underground Infrastructure Code ■ Erosion Prevention and Sediment Control Code ■ Excavation and Fill Code ■ Landscape Code ■ Stormwater Management Code
Veterinary Surgery	Code Assessable	■ SMBI Centre Zone Code ■ Access and Parking Code ■ Development Near Underground Infrastructure Code ■ Erosion Prevention and Sediment Control Code ■ Excavation and Fill Code ■ Infrastructure Works Code ■ Landscape Code ■ Stormwater Management Code
Defined uses not listed in column 1	Impact Assessable	
Defined uses listed in column 1 that do not comply with the level of assessment qualifications in column 2	Impact Assessable	
Uses not defined in Part 9 - Schedule 3 - Dictionary, Division 1 - Uses	Impact Assessable	

4.22.5 SMBI Centre Zone - Table of Assessment for Other Development not associated with a Material Change of Use of Premises

SMBI Centre Zone - Table of Assessment for Other Development

column 1	column 2	column 3
Other Development	**Level of Assessment**[4.183]	**Assessment Criteria**
Reconfiguration for -		
Creating lots by subdividing another lot by Standard Format Plan[4.184]	Impact Assessable	
Creating lots by subdividing another lot by - ■ Building Format Plan; or ■ Volumetric Format Plan	Code Assessable	■ SMBI Centre Zone Code ■ Reconfiguration Code
■ Rearranging the boundaries of a lot by registering a plan of subdivision; or ■ Dividing land into parts by Agreement; or ■ Creating an easement giving access to a lot from a constructed road	Code Assessable	■ Reconfiguration Code
Building Work for -		
Communications Structures	Exempt If minor building work[4.185] Self-Assessable If - (1) Not exempt; (2) Complying with the assessment criteria being the acceptable solutions listed in column 3 Code Assessable If not self-assessable	■ Acceptable Solutions in section 7.2.4 of the Communications Structures Code ■ Communications Structures Code

[4.183] See Schedule 3 - Dictionary, Division 2 - Administrative Terms for a definition of level of assessment.
[4.184] Whether or not having a Community Management Statement.
[4.185] See Schedule 3 - Dictionary, Division 2 - Administrative Terms for a definition of minor building work.

SMBI Centre Zone - Table of Assessment for Other Development

column 1	column 2	column 3
Other Development	**Level of Assessment**[4.183]	**Assessment Criteria**
Domestic Additions	Exempt If minor building work[4.185] Code Assessable If - (1) Not exempt; (2) The building height is - (a) 8.5 metres or less above ground level; (b) 2 storey or less; (3) The addition does not involve built to boundary walls that - (a) are greater than 7 metres in total length; (b) are greater than 3 metres in height; (c) have windows or doors Otherwise - Impact Assessable	■ SMBI Centre Zone Code ■ Domestic Additions Code ■ Development Near Underground Infrastructure Code ■ Erosion Prevention and Sediment Control Code ■ Excavation and Fill Code ■ Stormwater Management Code
Domestic Outbuilding	Exempt If minor building work[4.185] Code Assessable If not exempt	■ SMBI Centre Zone Code ■ Domestic Outbuilding Code ■ Development Near Underground Infrastructure Code ■ Erosion Prevention and Sediment Control Code ■ Excavation and Fill Code ■ Stormwater Management Code
On-site raising or relocation of an existing dwelling unit	Code Assessable If - (1) The building height is - (a) 8.5 metres or less above ground level; (b) 2 storey or less; (2) The relocation does not result in built to boundary walls that - (a) are greater than 7 metres in total length; (b) are greater than 3 metres in height; (c) have windows or doors Otherwise - Impact Assessable	■ SMBI Centre Zone Code ■ On-Site Raising and Relocation Code ■ Development Near Underground Infrastructure Code ■ Domestic Driveway Crossover Code ■ Erosion Prevention and Sediment Control Code ■ Excavation and Fill Code ■ Infrastructure Works Code ■ Stormwater Management Code

SMBI Centre Zone - Table of Assessment for Other Development

column 1	column 2	column 3
Other Development	**Level of Assessment**[4.183]	**Assessment Criteria**
Private Swimming Pool	Code Assessable	■ SMBI Centre Zone Code ■ Private Swimming Pool Code ■ Development Near Underground Infrastructure Code ■ Excavation and Fill Code
Private Tennis Court	Impact Assessable	■ SMBI Centre Zone Code ■ Private Tennis Court Code ■ Erosion Prevention and Sediment Control Code ■ Excavation and Fill Code ■ Landscape Code
Operational Work for -		
Constructing a Domestic Driveway Crossover	Self-Assessable If complying with the assessment criteria being the acceptable solutions listed in column 3 Code Assessable If not self-assessable	■ Acceptable Solutions in section 7.4.4 of the Domestic Driveway Crossover Code ■ Domestic Driveway Crossover Code
Excavation and Fill	Exempt If - (1) Disturbing less than 50m^3 of soil; (2) A height/depth not exceeding 300mm measured from ground level Self-Assessable If - (1) Not exempt; (2) Complying with the assessment criteria being the acceptable solutions listed in column 3 Code Assessable If not self-assessable	■ Acceptable Solutions in section 8.6.4 if the Erosion Prevention and Sediment Control Code ■ Acceptable Solutions A1.(1)(b),(c),(d) in section 7.6.4 of the Excavation and Fill Code ■ Erosion Prevention and Sediment Control Code ■ Excavation and Fill Code
Placing an Advertising Device on Premises	Self-Assessable If complying with the assessment criteria being the acceptable solutions listed in column 3 Code Assessable If not self-assessable	■ Acceptable Solutions in section 7.1.4 of the Advertising Devices Code ■ Advertising Devices Code

SMBI Centre Zone - Table of Assessment for Other Development

column 1	column 2	column 3
Other Development	**Level of Assessment**[4.183]	**Assessment Criteria**
Operational Work for Reconfiguring a Lot (by Standard Format Plan)	Code Assessable	■ Reconfiguration Code ■ Development Near Underground Infrastructure Code ■ Erosion Prevention and Sediment Control Code ■ Excavation and Fill Code ■ Infrastructure Works Code ■ Landscape Code ■ Stormwater Management Code
Private Waterfront Structure	Impact Assessable	■ Private Waterfront Structure Code ■ Development Near Underground Infrastructure Code ■ Erosion Prevention and Sediment Control Code ■ Excavation and Fill Code
All other development not listed in column 1	Exempt	

4.22.6 Compliance with SMBI Centre Zone Code

(1) Development that is consistent with the specific outcomes in section 4.22.8 complies with the SMBI Centre Zone Code.

Note -

The following planning scheme policies will assist in achieving Specific Outcomes within the SMBI Centre Zone Code -

- Planning Scheme Policy 5 - Environmental Emissions;
- Planning Scheme Policy 9 - Infrastructure Works;
- Planning Scheme Policy 12 - Social and Economic Impact Assessment.

4.22.7 Overall Outcomes for SMBI Centre Zone Code

(1) The overall outcomes are the purpose of the SMBI Centre Zone Code.

(2) The overall outcomes sought for the SMBI Centre Zone Code are described by five key characteristics[4.186] -

(a) Uses and Other Development;
(b) Built Form and Density;
(c) Amenity;
(d) Environment;
(e) Infrastructure.

Each of these is detailed below.

(a) Uses and Other Development

(i) Provide for a range of centre uses that -
a. enhance the primacy, vitality and vibrancy of the centre;
b. fulfill a traditional village centre role;
c. cater for the needs of visitors and the local community;
d. provide a focus for local community interaction and activity;
e. provide for local employment opportunities;
f. are conveniently accessed by private vehicles, public transport and pedestrian and cycle routes.

(ii) Provide for a limited range of residential and tourist uses that -
a. contribute to the economic and social vitality of the centre;
b. maximise accessibility for residents and tourists to services, facilities and employment;
c. are designed and integrated as part of a mixed-use development.

(iii) Sub-area SC1 - is identified as a location that provides for-
a. uses and other development that are compatible with the Island Industry Zone;
b. a buffer between the Island Industry Zone and the SMBI Residential Zone along Kings Road and Nicolas Street on Russell Island.

(iv) Reconfiguration, by standard format plan, maintains or enlarges current lot sizes through amalgamation to facilitate a range of centre uses with no additional lots being created within the zone.

(b) Built Form and Density

(i) The size, height and bulk of uses and other development achieve a high standard of built form and urban design that -
a. maintain a low-rise appearance consistent with adjoining zones;

[4.186] In combination, the overall outcomes in section 4.22.7(2)(a)-(e) define the character of the SMBI Centre Zone.

b. provide sufficient space for landscaping, retention or reinstatement of native plants, provision of service functions and car parking, generous public footpaths, and on-site wastewater treatment systems;
c. limit the impacts of overshadowing on public places and adjoining residential zones;
d. contribute to an attractive streetscape along all road frontages;
e. provide a high level of physical and visual interaction at ground level.

(ii) The density of uses and other development -
a. maximise the coherent and efficient use of land;
b. provide areas for public places, landscaping and streetscape works;
c. do not overwhelm or dominate the centre or adjacent residential zones.

(iii) Building design incorporates architectural styles and elements that achieve a low-key island centre built form.

(c) Amenity

(i) Uses and other development achieve a high standard of centre amenity by -
a. ensuring residential and tourist accommodation uses have access to natural light and ventilation, privacy and private and communal open space;
b. providing public places encompassing private land and public road reserves which allow sufficient space for outdoor dining and other forms of social interaction;
c. ensuring car parking areas are discretely located and do not visually dominate the centre;
d. protecting and enhancing places of cultural significance or streetscape value;
e. providing a landscape and streetscape setting that complement the centre;
f. designing buildings in accordance with crime prevention principles;
g. mitigating impacts associated with light, noise, air and traffic.

(d) Environment

(i) Uses and other development minimise adverse impacts on environmental, coastal and scenic values by -
a. maximising the retention and enhancement of native plants;
b. maximising the use of planting species that are native and characteristic to the islands;
c. limiting the need for excavation and fill;
d. protecting the site from erosion;
e. incorporating best practice stormwater management and enhancing water quality;
f. responding to topographical features.

(e) Infrastructure

(i) Uses and other development -
a. make efficient use of existing infrastructure;
b. provide for the extension of infrastructure in a orderly and cost effective manner through appropriate staging that is tailored to the specific needs of each island;
c. do not result in unacceptable risk to community infrastructure.

(ii) Uses and other development are serviced by infrastructure including -
a. reticulated water;
b. stormwater drainage that maximises use and protection of natural drainage systems;
c. low-impact road systems that minimise impact on native plants and natural drainage systems;
d. energy;
e. telecommunications;
f. on-site sewerage systems that ensure wastewater is treated and disposed of on-site subject to site, soil and locational constraints;
g. waste and recycling collection.

(iii) Uses and other development reinforce a legible, integrated, efficient and safe movement network that -

a. incorporate a range of transport modes including public transport, water and land based, vehicles, walking and cycling;
b. provide pedestrian, cycle and vehicle movement networks that maximises connectivity, permeability and ease of mobility within the centre, water and bus transport stops, and adjoining local residential areas;
c. minimise conflicts between traffic using the centre, local residential traffic, traffic accessing the water transport system, pedestrian and cyclists;
d. maximise opportunities for the provision of pedestrian and cycle paths.

4.22.8 Specific Outcomes and Probable Solutions applicable to Assessable Developm ent

Assessable Development			
Specific Outcomes		**Probable Solutions**	
	Uses and Other Development -		
S1.1	Uses and other development identified as inconsistent in Table 1 are not established or undertaken in the zone.	**P1.1**	No probable solution identified.
S1.2	Uses fulfill a traditional village centre role catering for the needs of visitors and the local community	**P1.2**	No probable solution identified.
S1.3	In sub-area SC1 - uses defined as a sensitive receiving environment are not located in the sub-area.	**P1.3**	No probable solution identified.
S1.4	Residential and tourist accommodation uses are designed and integrated as part of a mixed use development ensuring the maintenance of active street frontages at ground level.	**P1.4**	No probable solution identified.
S1.5	(1) Reconfiguration by standard format plan - (a) maintains or enlarges existing lot sizes through amalgamation to facilitate a range of centre uses; (b) does not result in creation of additional lots.	**P1.5**	(1) No probable solution identified.
	Built Form and Density -		
S2.1	(1) Building height adopts a low-rise built form that ensures a high quality appearance and does not dominate the landscape when viewed from public places or Moreton Bay; (2) Where a use proposes a building height greater than an existing dwelling unit in an adjoining residential zone, site layout and building design maximises any potential impacts of overshadowing and loss of privacy.	**P2.1**	(1) Buildings and structures do not exceed 10.5 metres in height above ground level; (2) Where adjoining the SMBI Residential Zone buildings and structures do not exceed 8.5 metres in height above ground level. **Note -** For specific assessment criteria for building height in a centre for residential and tourist uses refer to relevant use codes.
S2.2	(1) Site coverage balances built and unbuilt areas by - (a) preventing buildings from dominating the streetscape and landscape as viewed from a public place or Moreton Bay; (b) facilitating retention or	**P2.2**	(1) Site coverage is 75 percent or less of the site area.

Assessable Development			
Specific Outcomes		**Probable Solutions**	
	reinstatement of native plants; (c) allowing space for landscape and streetscape treatments; (d) ensuring adequate area for the on-site disposal of wastewater; (e) providing adequate space for service functions such as car parking, servicing and manouevring areas.		
S2.3	(1) Building setbacks are consistent with a low-key built form that - (a) allow for the retention and reinstatement of native plants; (b) provide generous pedestrian environment; (c) provide sufficient area for landscaping and streetscape treatments; (d) provide space for service functions such as car parking; (2) Where adjoining the SMBI Residential Zone front, side and rear setbacks - (a) maintain privacy, breezes and solar access to adjoining residential uses; (b) allow landscaping that will ensure a significant level of screening between the centre and residential zone.	**P2.3**	(1) The front setback is 3 metres; (2) Where adjoining the SMBI Residential Zone, side and rear setback are - (a) a minimum of 3 metres or half the height of the building at that point, whichever is greater; (b) landscaped with mature trees that are capable of growing to above the height of the eaves of the building within 5 years of planting; (c) supported by a 2 metre high acoustic and visual screen fence along the entire length of the boundary.
S2.4	(1) For residential and tourist uses, density is determined through - (a) site coverage; (b) setback; (c) building height; (d) the ability to provide on-site wastewater treatment systems.	**P2.4**	(1) No probable solution identified.
S2.5	(1) Building design and appearance complements the low-key built form and natural setting of the Islands within Moreton Bay through incorporating architectural elements that - (a) exhibit a high degree of interest through the use of colour, angles, materials and shadows; (b) integrate with landscape planting and prevailing landscape features; (c) provide functional and attractive facades that	**P2.5**	(1) No probable solution identified.

Assessable Development			
Specific Outcomes		**Probable Solutions**	
	contribute to a high quality built form and streetscape along all road frontages; (d) minimise any adverse overshadowing and reflective impacts on public places and adjoining residential properties; (e) ensure main entrances and windows address the street frontage; (f) incorporate covered pedestrian walkways by the use of awnings; (g) incorporate open frame architecture including verandahs, awnings or the like.		
	Amenity -		
S3.1	(1) Uses and other development establish an active interface with adjoining pedestrian spaces by - (a) ensuring active street frontages at ground level; (b) providing outdoor dining or window display areas that are orientated to the street; (c) providing physical connections and linkages between buildings, and between buildings and public places, to encourage pedestrian movement; (d) locating car parking and service areas behind buildings to minimise their visual and physical intrusion on the streetscape.	**P3.1**	(1) No probable solution identified.
S3.2	(1) Uses and other development are designed in accordance with the principles of Crime Prevention through Environmental Design (CPTED) to assist in crime prevention, by being - (a) orientated towards the street to provide opportunities for casual surveillance of public places; (b) designed and well lit to ensure safety and casual surveillance of car parking areas, and pedestrian and cycle paths.	**P3.2**	(1) No probable solution identified. **Note -** To assist in achieving S3.2 refer to Planning Scheme Policy 16 - Safer By Design.

Assessable Development			
Specific Outcomes		**Probable Solutions**	
S3.3	High quality landscaping treatments are incorporated to reinforce a sense of place and contribute to the overall attractiveness and function of the centre.	**P3.3**	No probable solution identified.
S3.4	(1) Uses and other development maintain a high standard of centre amenity by - (a) locating air conditioning units and/or refrigeration units so that they are not visually obtrusive and do not cause adverse visual or noise impacts on adjoining premises; (b) locating car parking and servicing areas to minimise impacts on adjoining premises and the streetscape.	**P3.4**	(1) No probable solution identified. **Note -** Refer to Part 8 - Division 8 - Landscape Code for additional assessment critical.
S3.5	Uses and other development do not adversely impact on the cultural heritage values of a registered heritage place(s) or character precinct.	**P3.5**	No probable solution identified
S3.6	(1) Residential and tourist accommodation uses maximise privacy (visual and acoustic) through - (a) locating habitable room windows so they do not directly overlook habitable rooms of adjacent uses, either within or adjoining the use; (b) separating noise generating areas from sleeping areas.	**P3.6**	(1) No probable solution identified.
S3.7	(1) Residential and tourist accommodation uses ensure private and communal open space areas are - (a) clearly defined for their intended use and user; (b) easily accessible from living or common areas; (c) useable in size and dimension; (d) of a suitable slope; (e) capable of receiving solar access.	**P3.7**	(1) No probable solution identified. **Note -** For additional privacy assessment criteria refer to relevant use code.
S3.8	(1) Artificial lighting does not result in unreasonable disturbance to any person or activity; (2) Lighting is designed to avoid spilling onto adjoining residential	**P3.8**	(1) No probable solution identified; (2) Where adjoining the SMBI; Residential Zone the vertical illumination resulting from direct, reflected or other incidental light

Assessable Development			
Specific Outcomes		**Probable Solutions**	
	zones; (3) Glare and reflection from the sun are minimised through material and glazing choice.		emanating from the site does not exceed 8 lux when measured at any point 1.5 metres outside the boundary at or above ground level; (3) No probable solution identified.
S3.9	Air quality impacts are eliminated or mitigated to a level that is compatible with an island centre environment.	**P3.9**	No probable solution identified.
S3.10	(1) Where adjoining a residential zone, non-residential uses and other development are located and designed to reduce noise impacts.	**P3.10**	(1) The use or other development does not generate noise, measured as the $L_{Amax,adj,T}$ parameter, at the boundary of the nearest residential zone, greater than - (a) 5dB(A) above the background noise level between 7am to 10 pm; or (b) 3dB(A) above the background noise level between 10 pm to 7 am. **Note -** ■ The $L_{Amax,adj,T}$ parameter is defined in the *Noise Measurement Manual* (Environmental Protection Agency, 2000); ■ Refer to Part 11 - Planning Scheme Policy 5 - Environmental Emissions for further information on noise and air quality impacts.
	Environment -		
S4.1	(1) Excavation and fill is minimised by locating and designing uses and other development to - (a) prevent the unnecessary removal of existing native plants; (b) protect natural overland drainage systems; (c) protect the amenity of adjoining properties; (d) minimise erosion and sediment run-off.	**P4.1**	(1) No probable solution identified. **Note -** Refer to Part 7 - Division 6 - Excavation and Fill for assessment criteria where the site requires earthworks.
S4.2	(1) Maximise the retention and reinstatement of native plants within the development site and adjoining road reserve	**P4.2**	(1) Landscaping - (a) allows for retention and reinstatement of native plants in an undisturbed area that is no less than 10 percent of the site; or (b) on a cleared site ensures reinstatement of an area of not less than 10 percent of

Assessable Development			
Specific Outcomes		**Probable Solutions**	
			the site with native plants; (c) provides a 2 metre wide screen at the rear of the site consisting of native plants except where pedestrian or vehicle access is required; (d) for car parking areas retain or reinstate native shade trees at a ratio of 1 per 5 car parking spaces; (e) utilises species from the native species listed in Part 9 - (i) Schedule 10 - Vegetation Species List; (ii) Schedule 9 - Street Trees where within the road reserve. **Note -** No vegetation is removed prior to commencement of construction without Local Government approval in accordance with *Local Law 6 - Protection of Vegetation.*
S4.3	Driveways and vehicle crossovers are designed to minimise the removal of any existing street trees located within the road reserve.	**P4.3**	No probable solution identified.
S4.4	(1) Protect the environment from impacts associated with the use or other development including - (a) stormwater run-off; (b) water quality; (c) erosion and sediment run-off; (d) weed infestation.	**P4.4**	(1) No probable solution identified.
	Infrastructure -		
S5.1	Infrastructure is provided in an orderly and cost effective manner that minimises disturbance and adverse impacts on the island environment and Moreton Bay.	**P5.1**	No probable solutions identified.
S5.2	(1) All uses and other development are serviced by infrastructure including - (a) reticulated water; (b) wastewater - (i) is treated and disposed of on-site subject to site, soil and locational constraints; (ii) reduces the potential for - a. contaminating	**P5.2**	(1) No probable solutions identified. **Note -** For additional assessment criteria for stormwater requirements refer to Part 8 - ■ Division 7 - Infrastructure Works Code; ■ Division 9 - Stormwater Management Code.

Assessable Development			
Specific Outcomes		**Probable Solutions**	
	groundwater, surface water or wetland environments; b. risks to reticulated water supply and public health; (c) stormwater management systems that - (i) utilise natural overland systems; (ii) incorporate measures to reduce stormwater quantity and manage stormwater quality; (d) constructed road that minimise tree removal and the concentration of stormwater run-off; (e) energy; (f) telecommunications; (g) waste and recycling collection.		
S5.3	(1) Waste and recycling is managed to minimise impacts on the environment and nearby premises by - (a) locating waste and recycling storage areas to protect amenity and to provide safe manual handling of containers; (b) screening waste and recycling container storage areas from view; (c) providing for the cleansing of containers in a manner that does not cause adverse environmental impacts; (2) Uses and other development - (a) provide safe and efficient manoeuvring for waste collection vehicles; (b) ensure all bulk waste and recycling containers are serviced off-street and not on roads with public access; (c) ensure sufficient vertical clearance for container servicing; (d) ensure unobstructed access to containers by collection vehicles; (3) Waste and recycling storage is designed and located to - (a) provide adequate container volume to contain the waste and recyclables; (b) provide recycle containers in an equivalent or greater volume to waste containers;	**P5.3**	(1) No probable solution identified. (2) No probable solution identified. (3) No probable solution identified. **Note -** Refer to Part 11 - Planning Scheme Policy 9 - Infrastructure Works – Chapter 16 – Waste Management for further information on waste and recycling container volume, storage, servicing, screening and cleansing. Refer to Part 8 - Division 1 - Access and Parking Code for waste collection vehicle servicing and manoeuvring assessment criteria.

Assessable Development			
Specific Outcomes		**Probable Solutions**	
	(c) provide a dedicated waste and recycling container storage area that is convenient and safe to use; (d) ensure containers are located on impermeable surfaces.		
S5.4	(1) Uses and other development maximise the safe, convenient and comfortable movement of public transport passengers, pedestrians and cyclists by providing - (a) links to the water based transport system and future public transport stops; (b) pedestrian and cycle paths throughout the centre and neighbouring residential areas; (c) pathways, building entrances, amenities and seating that support accessibility for people with special needs.	**P5.4**	(1) No probable solution identified. **Note -** Refer to Part 8 - ■ Division 1 - Access and Parking Code for further assessment criteria on access and internal movement; ■ Division 7 - Infrastructure Works Code for further assessment criteria on provision, design and construction of utility infrastructure and pedestrian and cycle paths.
S5.5	(1) Opportunities for cycling as a model choice for employees and customers are provided through - (a) clearly defined on-site cycle paths and facilities; (b) secure cycle storage areas, and facilities including showers and lockers for employees; (c) provision for cycle spaces for customers.	**P5.5**	(1) Cycling facilities include - (a) on-site bicycle facilities that are designed and constructed in accordance with *AUSTROAD's Traffic Engineering Practice*, Part 14 - Bicycles; (b) the following for employees - (i) 1 bicycle space per 100m^2 of gross floor area; (ii) 1 personal locker per 2 bicycle parking spaces; (iii) 1 shower cubicle with change area per 5 bicycle spaces; or (iv) 1 shower cubicle with change area if less than 5 bicycle spaces are required; (c) 1 bicycle space per 100m^2 of gross floor area for customers, up to a maximum of 10 spaces.
S5.6	(1) Vehicular access, parking facilities and service delivery areas are located and designed to - (a) minimise impact on adjoining residential areas; (b) minimise conflicts between traffic using the centre, local	**P5.6**	(1) No probable solution identified.

Assessable Development			
Specific Outcomes		Probable Solutions	
	residential traffic, traffic accessing the water transport facility, service vehicles, pedestrians and cyclists; (c) provide for integrated car parking and service delivery areas.		
S5.7	Community infrastructure is able to function effectively during and immediately after flood events.	**P5.7**	Community infrastructure is located at or above the recommended flood levels in Table 2 - Recommended Flood Levels for Community Infrastructure.

Table 1 - Inconsistent Uses and Other Development

Inconsistent Uses
Aged Persons and Special Needs Housing - in sub-area SC1
Agriculture
Airport
Animal Keeping
Apartment Building
Bed and Breakfast - in sub-area SC1
Brothel
Child Care Centre - in sub-area SC1
Cemetery
Display and Sale Activity - except in sub-area SC1
Display Dwelling
Drive Through Restaurant
Dual Occupancy - in sub-area SC1; or where not part of a mixed use development
Dwelling House
Extractive Industry
Forestry
General Industry
Heavy Industry
High Impact Industry
Hospital - in sub-area SC1
Institution
Intensive Agriculture
Landscape Supply Depot
Marine Services
Mobile Home Park
Multiple Dwelling - in sub-area SC1; or where not part of a mixed use development
Outdoor Recreation Facility
Relatives Apartment
Roadside Stall
Rural Enterprise
Service Industry - where having more than 100m^2 gross floor area
Small Lot House
Tourist Accommodation - in sub-area SC1; or where not part of a mixed use development
Tourist Park
Vehicle Depot
Vehicle Repair Premises - except in sub-area SC1
Warehouse
Inconsistent Other Development
Creating lots by subdividing another lot by a Standard Format Plan

Table 2 - Recommended Flood Levels for Community Infrastructure

Type of Community Infrastructure	Recommended Flood Level AEP (ARI)
Emergency services, other than police facilities	0.2% (1 in 500 year ARI)
Emergency shelters	0.5% (1 in 200 year ARI)
Police facilities	0.5% (1 in 200 year ARI)
Hospitals and associated facilities	0.2% (1 in 500 year ARI)
Stores of valuable records or items of historic or cultural significance, such as galleries and libraries	0.5% (1 in 200 year ARI)
Power stations	0.2% (1 in 500 year ARI)
Major switch yards	0.2% (1 in 500 year ARI)
Substations	0.5% (1 in 200 year ARI)
Sewerage treatment plants	1% (1 in 100 year ARI)
Water treatment plants	0.5% (1 in 200 year ARI)
■ State-controlled roads ■ Works of an electricity entity not otherwise listed in this table ■ Railway lines, stations and associated facilities ■ Aviation facilities ■ Communication network facilities	No specific recommended flood level but development proponents should ensure that the infrastructure is optimally located and designed to achieve suitable levels of service, having regard to the processes and policies of the administering government agency.

Reference - *State Planning Policy Guideline 1/03: Mitigating the Adverse Impacts of Flood, Bushfire and Landslide.*

Division 23 - SMBI Residential Zone

4.23.1 Introduction

(1) This division contains the provisions for the SMBI Residential Zone. They are -

(a) The SMBI Residential Zone Tables of Assessment, that incorporates -
- (i) Levels of assessment for development in the SMBI Residential Zone (section 4.23.2);
- (ii) Assessment criteria for development in the SMBI Residential Zone (section 4.23.3);
- (iii) SMBI Residential Zone - Table of Assessment for Material Change of Use of Premises (section 4.23.4);
- (iv) SMBI Residential Zone - Table of Assessment for Other Development not associated with a Material Change of Use of Premises (section 4.23.5).

(b) The SMBI Residential Zone Code, that incorporates -
- (i) Compliance with the SMBI Residential Zone Code (section 4.23.6);
- (ii) Overall Outcomes for the SMBI Residential Zone Code (section 4.23.7);
- (iii) Specific Outcomes and Probable Solutions applicable to Assessable Development (section 4.23.8).

4.23.2 Levels of assessment for development in the SMBI Residential Zone

(2) Sections 4.23.4 and 4.23.5 identify the level of assessment for development in the SMBI Residential Zone, as follows -

(a) section 4.23.4 SMBI Residential Zone - Table of Assessment for Making a Material Change of Use of Premises[4.187] -
- (i) column 1 identifies uses that are exempt, self-assessable or assessable;
- (ii) column 2 identifies the level of assessment for the uses listed in column 1;
- (iii) The use is impact assessable where -
  - a. it is defined in Part 9 - Schedule 3 - Dictionary, Division 1 - Uses and is not listed in column 1; or
  - b. it is listed in column 1 and does not comply with the level of assessment qualifications listed in column 2; or
  - c. it is not defined in Part 9 - Schedule 3 - Dictionary, Division 1 - Uses.

(b) section 4.23.5 SMBI Residential Zone - Table of Assessment for Other Development not associated with a Material Change of Use of Premises -
- (i) column 1 identifies other development that is exempt, self-assessable or assessable;
- (ii) column 2 identifies the level of assessment for other development listed in column 1;
- (iii) where the other development is not listed in column 1 it is exempt.

(3) Overlays may alter the level of assessment identified in (1)(a) and (b)[4.188].

[4.187] Works associated with an application for a material change of use of premises may be assessed together with the material change of use.

[4.188] Refer to Part 5 - Overlays to determine the level of assessment for the use or other development where an Overlay affects the lot and Part 1, section 1.2.5(10)(f) that explains how the highest level of assessment applies.

4.23.3 Assessment criteria for development in the SMBI Residential Zone

(4) Development in the SMBI Residential Zone is assessed against the assessment criteria listed in column 3 of sections 4.23.4 and 4.23.5, as follows -

(a) acceptable solutions of applicable codes for self-assessable development; or

(b) applicable codes for code assessable development.

(5) Self-assessable development that does not comply with all the acceptable solutions of the applicable codes is assessable development.

(6) Impact assessable development will be assessed against all relevant provisions of the Redlands Planning Scheme.

Note -

- The level of assessment indicated within section 4.23.4 - SMBI Residential Zone - Table of Assessment for Material Change of Use of Premises may be affected by Division 2 of the Regulatory Provisions of the *SEQ Regional Plan 2005 - 2026.*
- The level of assessment for reconfiguration as indicated within section 4.23.5 - SMBI Residential Zone - Table of Assessment for Other Development not associated with a Material Change of Use of Premises, where within the Regional Landscape and Rural Production Area or Investigation Area of the *SEQ Regional Plan 2005 - 2026* -
  - complies with Division 3 of the Regulatory Provisions;
  - has a minimum lot size of 100 hectares, unless the subdivision meets an exclusion documented in Division 3.

4.23.4 SMBI Residential Zone - Table of Assessment for Material Change of Use of Premises

SMBI Residential Zone - Table of Assessment for Material Change of Use of Premises

column 1	column 2	column 3
Use[4.189]	**Level of Assessment**[4.190]	**Assessment Criteria**
Bed and Breakfast	Code Assessable	■ SMBI Residential Zone Code ■ Bed and Breakfast Code ■ Infrastructure Works Code ■ Landscape Code
Caretakers Dwelling	Code Assessable	■ SMBI Residential Zone Code ■ Caretakers Dwelling Code
Display Dwelling	Code Assessable	■ SMBI Residential Zone Code ■ Display Dwelling Code
Dwelling House	Code Assessable If - (1) The building height is - (a) 8.5 metres or less above ground level; (b) 2 storey or less; (2) The use does not involve built to boundary walls that - (a) are greater than 7 metres in total length; (b) are greater than 3 metres in height; (c) have windows or doors Otherwise - Impact Assessable	■ SMBI Residential Zone Code ■ Dwelling House Code ■ Domestic Driveway Crossover Code ■ Erosion Prevention and Sediment Control Code ■ Excavation and Fill Code
Estate Sales Office	Code Assessable	■ SMBI Residential Zone Code ■ Estate Sales Office Code
Home Business	Self-Assessable If complying with the assessment criteria being the acceptable solutions listed in column 3 Code Assessable If not self-assessable	■ Acceptable Solutions in section 6.15.4 of the Home Business Code ■ SMBI Residential Zone Code ■ Home Business Code ■ Access and Parking Code And where being carried out in a Domestic Outbuilding - ■ Domestic Outbuilding Code ■ Development Near Underground

[4.189] See Part 9 - Schedule 3 - Dictionary, Division 1 - Uses.
[4.190] See Part 9 - Schedule 3 - Dictionary, Division 2 - Administrative Terms for a definition of level of assessment.

SMBI Residential Zone - Table of Assessment for Material Change of Use of Premises

column 1	column 2	column 3
Use[4.189]	**Level of Assessment**[4.190]	**Assessment Criteria**
		Infrastructure Code ■ Erosion Prevention and Sediment Control Code ■ Excavation and Fill Code
Minor Utility	Exempt	
Park	Self-Assessable If - (1) Being undertaken by the local government; (2) On land in the ownership or control of the local government; (3) Complying with the assessment criteria being the acceptable solutions listed in column 3 Code Assessable If not self-assessable	■ Acceptable Solutions in section 6.20.4 of the Park Code ■ Acceptable Solutions of section 8.5.4 of the Development Near Underground Infrastructure Code ■ SMBI Residential Zone Code ■ Park Code ■ Access and Parking Code ■ Development Near Underground Infrastructure Code ■ Infrastructure Works Code ■ Landscape Code ■ Stormwater Management Code
Relatives Apartment	Code Assessable	■ SMBI Residential Zone Code ■ Relatives Apartment Code ■ Development Near Underground Infrastructure Code ■ Erosion Prevention and Sediment Control Code ■ Excavation and Fill Code
Road	Exempt	
Small Lot House	Code Assessable If - (1) The building height is - (a) 8.5 metres or less above ground level; (b) 2 storey or less; (2) The use does not involve built to boundary walls that - (a) are greater than 7 metres in total length; (b) are greater than 3 metres in height; (c) have windows or doors	■ SMBI Residential Zone Code ■ Small Lot House Code ■ Development Near Underground Infrastructure Code ■ Domestic Driveway Crossover Code ■ Erosion Prevention and Sediment Control Code ■ Excavation and Fill Code Infrastructure Works Code

SMBI Residential Zone - Table of Assessment for Material Change of Use of Premises

column 1	column 2	column 3
Use[4.189]	**Level of Assessment**[4.190]	**Assessment Criteria**
	Otherwise - Impact Assessable	
Telecommunications Facility	Self-Assessable[4.191] If complying with the assessment criteria being the acceptable solutions listed in column 3 Otherwise - Impact Assessable	■ Acceptable Solutions in section 6.26.4 of the Telecommunications Facility Code ■ Acceptable Solutions in section 8.5.4 of the Development Near Underground Infrastructure Code ■ Acceptable Solutions in section 8.6.4 of the Erosion Prevention and Sediment Control Code ■ Acceptable Solutions A1.(1)(a) and (c) in section 7.6.4 of the Excavation and Fill Code
Temporary Use	Self-Assessable[4.192] If complying with the assessment criteria being the acceptable solutions listed in column 3 Otherwise - Impact Assessable	■ Acceptable Solutions in section 6.27.4 of the Temporary Use Code
Utility Installation	Code Assessable	■ SMBI Residential Zone Code ■ Access and Parking Code ■ Development Near Underground Infrastructure Code ■ Erosion Prevention and Sediment Control Code ■ Excavation and Fill Code ■ Landscape Code ■ Stormwater Management Code
Defined uses not listed in column 1	Impact Assessable	
Defined uses listed in column 1 that do not comply with the level of assessment qualifications in column 2	Impact Assessable	
Uses not defined in Part 9 - Schedule 3 - Dictionary, Division 1 - Uses	Impact Assessable	

[4.191] If not self-assessable, a Telecommunication Facility in the SMBI Residential Zone is impact assessable.
[4.192] If not self-assessable, a Temporary Use in the SMBI Residential Zone is impact assessable.

4.23.5 SMBI Residential Zone - Table of Assessment for Other Development not associated with a Material Change of Use of Premises

SMBI Residential Zone - Table of Assessment for Other Development

column 1	column 2	column 3
Other Development	**Level of Assessment**[4.193]	**Assessment Criteria**
Reconfiguration for -		
Creating lots by subdividing another lot by Standard Format Plan[4.194]	Impact Assessable	
Creating lots by subdividing another lot by - ■ Building Format Plan; or ■ Volumetric Format Plan	Code Assessable	■ SMBI Residential Zone Code ■ Reconfiguration Code
■ Rearranging the boundaries of a lot by registering a plan of subdivision; or ■ Dividing land into parts by Agreement; or ■ Creating an easement giving access to a lot from a constructed road	Code Assessable	■ Reconfiguration Code
Building Work for -		
Communications Structures	Exempt If minor building work[4.195] Self-Assessable If - (1) Not exempt; (2) Complying with the assessment criteria being the acceptable solutions listed in column 3 Code Assessable If not self-assessable	■ Acceptable Solutions in section 7.2.4 of the Communications Structures Code ■ Communications Structures Code

[4.193] See Part 9 - Schedule 3 - Dictionary, Division 2 - Administrative Terms for a definition of level of assessment.
[4.194] Whether or not having a Community Management Statement.
[4.195] See Part 9 - Schedule 3 - Dictionary, Division 2 - Administrative Terms for a definition of minor building work.

SMBI Residential Zone - Table of Assessment for Other Development

column 1	column 2	column 3
Other Development	**Level of Assessment**[4.193]	**Assessment Criteria**
Domestic Additions	Exempt If minor building work[4.195] Self-Assessable If - (3) Not exempt; (4) Complying with the assessment criteria being the acceptable solutions listed in column 3 Code Assessable If - (1) Not exempt; (2) The building height is - (a) 8.5 metres or less above ground level; (b) 2 storey or less; (3) The addition does not result in built to boundary walls that - (a) are greater than 7 metres in total length; (b) are greater than 3 metres in height; (c) have windows or doors Otherwise - Impact Assessable	 ■ Acceptable Solutions in section 7.3.5 of the Domestic Additions Code; ■ Acceptable Solutions in section 8.6.4 of the Erosion Prevention and Sediment Control Code; ■ A1(1)(a) and (c) of the Excavation and Fill Code ■ SMBI Residential Zone Code ■ Domestic Additions Code ■ Erosion Prevention and Sediment Control Code ■ Excavation and Fill Code
Domestic Outbuilding	Exempt If minor building work[4.195] Self-Assessable If - (1) Not exempt; (2) Complying with the assessment criteria being the acceptable solutions listed in column 3 Code Assessable If not exempt	 ■ Acceptable Solutions in section 7.5.5 of the Domestic Outbuilding Code; ■ Acceptable Solutions in section 8.6.4 of the Erosion Prevention and Sediment Control Code; ■ A1(1)(a) and (c) of the Excavation and Fill Code ■ SMBI Residential Zone Code ■ Domestic Outbuilding Code ■ Erosion Prevention and Sediment Control Code ■ Excavation and Fill Code

SMBI Residential Zone - Table of Assessment for Other Development

column 1	column 2	column 3
Other Development	**Level of Assessment**[4.193]	**Assessment Criteria**
On-site raising or relocation of an existing dwelling unit	Code Assessable If - (1) The building height is - (a) 8.5 metres or less above ground level; (b) 2 storey or less; (2) The relocation does not result in built to boundary walls that - (a) are greater than 7 metres in total length; (b) are greater than 3 metres in height; (c) have windows or doors Otherwise - Impact Assessable	■ SMBI Residential Zone Code ■ On-Site Raising and Relocation Code ■ Erosion Prevention and Sediment Control Code ■ Excavation and Fill Code
Private Swimming Pool	Code Assessable	■ Private Swimming Pool Code ■ Development Near Underground Infrastructure Code ■ Erosion Prevention and Sediment Control Code ■ Excavation and Fill Code
Private Tennis Court	Code Assessable	■ Private Tennis Court Code ■ Erosion Prevention and Sediment Control Code ■ Excavation and Fill Code ■ Landscape Code
Operational Work for -		
Constructing a Domestic Driveway Crossover	Self-Assessable If complying with the assessment criteria being the acceptable solutions listed in column 3 Code Assessable If not self-assessable	■ Acceptable Solutions in section 7.4.4 of the Domestic Driveway Crossover Code ■ Domestic Driveway Crossover Code
Excavation and Fill	Exempt If - (1) Disturbing less than 50m^3 of soil; (2) A height/depth not exceeding 300mm measured from ground level Self-Assessable If - (1) Not exempt; (2) Complying with the	■ Acceptable Solutions in section 8.6.4 of the Erosion Prevention and Sediment Control Code ■ Acceptable Solutions A1.(1)(a)and(c) in section 7.6.4 of the

SMBI Residential Zone - Table of Assessment for Other Development

column 1	column 2	column 3
Other Development	**Level of Assessment**[4.193]	**Assessment Criteria**
	assessment criteria being the acceptable solutions listed in column 3 Code Assessable If not self-assessable	Excavation and Fill Code ■ Erosion Prevention and Sediment Control Code ■ Excavation and Fill Code
Placing an Advertising Device on Premises	Self-Assessable If complying with the assessment criteria being the acceptable solutions listed in column 3 Code Assessable If not self-assessable	■ Acceptable Solutions in section 7.1.4 of the Advertising Devices Code ■ Advertising Devices Code
Operational Work for Reconfiguring a Lot (by Standard Format Plan)	Code Assessable	■ Reconfiguration Code ■ Development Near Underground Infrastructure Code ■ Erosion Prevention and Sediment Control Code ■ Excavation and Fill Code ■ Infrastructure Works Code ■ Landscape Code
Private Waterfront Structure	Impact Assessable	
All other development not listed in column 1	Exempt	

4.23.6 Compliance with SMBI Residential Zone Code

(1) Development that is consistent with the specific outcomes in section 4.23.8 complies with the SMBI Residential Zone Code.

Note -

The following planning scheme policies will assist in achieving specific outcomes within the SMBI Residential Zone Code -

- Planning Scheme Policy 4 - Ecological Impact;
- Planning Scheme Policy 5 - Environmental Emissions;
- Planning Scheme Policy 9 - Infrastructure Works;
- Planning Scheme Policy 12 - Social and Economic Impact Assessment.

4.23.7 Overall Outcomes for SMBI Residential Zone Code

(1) The overall outcomes are the purpose of the SMBI Residential Zone Code.

(2) The overall outcomes sought for the SMBI Residential Zone Code are described by five key characteristics[4.196] -

(a) Uses and Other Development;
(b) Built Form and Density;
(c) Amenity;
(d) Environment;
(e) Infrastructure.

Each of these is detailed below.

(a) Uses and Other Development

(i) Provide for detached dwelling houses on existing or amalgamated lots that -
a. are predominantly low-key;
b. encourage a variety of detached housing styles and sizes;
c. encourage opportunities for working from home.

(ii) Provide for a limited range of non-residential uses that -
a. fulfill a local community need and provide opportunities for social interaction and activity;
b. are highly accessible to the local residents served;
c. do not impact on the role and function of centres;
d. do not result in commercial ribbon development.

(iii) Reconfiguration maintains or enlarges current lot sizes through amalgamation to preserve a low-key built form with no additional lots being created within the zone.

(iv) Uses and other development are located to protect land below the 1 percent AEP (1 in 100 year ARI) flood and storm tide level to -
a. avoid the risk of flooding and maintain the safety of people and property;
b. protect environmental values of the islands, coast and Moreton Bay Marine Park;
c. maintain visual amenity;
d. protect the hydraulic capacity of land below the flood or storm tide level.

[4.196] In combination, the overall outcomes in section 4.23.7(2)(a)-(e) define the character of the SMBI Residential Zone.

(b) Built Form and Density

(i) The scale of uses and other development contribute to a low-key residential built form that -
a. respects the natural environment and topography;
b. ensures retention or reinstatement of native plants;
c. maintains a low-rise appearance through limiting building height to 8.5 metres, 2 storey, or less above ground level;
d. limits the scale and bulk of buildings to ensure they are in proportion to lot size;
e. ensures buildings have recognisable elements in relation to siting, width, depth and bulk.

(ii) The density of uses and other development reinforce the low-key island residential style.

(iii) Building design incorporates architectural styles and elements that is compatible with an island residential style and encourages a built form that minimises visual impacts on the landscape setting.

(c) Amenity

(i) Uses and other development achieve a high standard of island residential amenity by -
a. protecting and enhancing places of cultural significance or streetscape value;
b. having access to natural light and ventilation, privacy and private open space commensurate with the use;
c. maintaining the islands landscape setting.

(ii) Uses and other development maintain safety of people and property by eliminating or mitigating impacts associated with light, noise, air and traffic.

(d) Environment

(i) Uses and other development minimise adverse impacts on environmental, coastal and scenic values by -
a. preserving and enhancing native plants on the Islands;
b. using plant species that are native to the Islands;
c. minimising the need for excavation and fill;
d. protecting the site from erosion;
e. incorporating suitable stormwater management solutions to protect natural drainage systems and enhance water quality;
f. responding to topographical features.

(ii) In sub-area SR 1 uses and development are located, designed and managed to ensure the protection, and rehabilitation of identified scenic and environmental values.

(e) Infrastructure

(i) Uses and other development -
a. make efficient use of existing infrastructure;
b. provide an appropriate level of infrastructure to service the ultimate development of the islands;
c. provide for the extension of infrastructure in an orderly and cost effective manner through appropriate staging that is tailored to the specific needs of each island;
d. do not result in unacceptable risk to community infrastructure.

(ii) Uses and other development are serviced by infrastructure including -
a. reticulated water;
b. on-site sewerage systems that ensure wastewater is treated and disposed of on-site; subject to site, soil and locational constraints;
c. on-site stormwater systems that ensure the effective management of the quantity and quality of stormwater run-off;
d. low-impact road systems;
e. energy;
f. telecommunications;

g. waste and recycling collection.

(iii) Uses and other development reinforce an integrated, legible, efficient and safe movement network that -

a. incorporates a range of modes including public transport, water and land based, vehicles, walking and cycling;

b. provides pedestrian, cycle and vehicle movement networks that maximise connectivity, permeability and ease of mobility.

4.23.8 Specific Outcomes and Probable Solutions applicable to Assessable Developm ent

Assessable Development			
Specific Outcomes		**Probable Solutions**	
	Uses and Other Development -		
S1.1	Uses and other development listed as inconsistent in Table 1 are not established or undertaken in the zone.	**P1.1**	No probable solution identified.
S1.2	(1) Non-residential uses, such as local shopping, medical facilities, churches, child care centres and the like may be contemplated in appropriate locations and subject to detailed development requirements including - (a) being located on the major road network; (b) co-locating with other similar uses; (c) providing only for the identified convenience needs of the local community; (d) not impacting on the role and function of the City's network of centres; (e) resulting in positive economic and social benefits for the local community. **Note -** Refer to Part 11 - Planning Scheme Policy 12 - Social and Economic Impact Assessment.	**P1.2**	(1) Non-residential uses - (a) locate on the corner of collector or higher order roads; (b) where of - (i) retail or commercial nature - a. are co-located with other similar uses; b. do not exceed a maximum of 400m^2 gross floor area, with no one tenancy exceeding 200m^2 gross floor area; c. are not within 800 metres of any similar uses or a centre zone; (ii) community facilities, health care centres, childcare centres, or uses of a similar community service nature - a. are not greater than 400m^2 of gross floor area per use; b. are co-located with other similar uses or retail or commercial uses;
S1.3	(1) The following uses are encouraged - (a) bed and breakfast; (b) home business; (c) relatives apartment	**P1.3**	(1) No probable solution identified. **Note -** For assessment criteria associated with these uses refer to Part 6 - ■ Division 5 - Bed and Breakfast Code; ■ Division 15 - Home Business Code; ■ Division 21 - Relatives Apartment Code.
S1.4	(1) Reconfiguration - (a) reinforces a low-key built form by maintaining or enlarging existing lot sizes through amalgamation; (b) does not result in creation of additional lots.	**P1.4**	(1) No probable solutions identified.

Assessable Development			
Specific Outcomes		**Probable Solutions**	
S1.5	Uses and other development are not undertaken on land below the 1 percent AEP (1 in 100 year ARI) flood level and storm surge level.	**P1.5**	No probable solution identified.
	Built Form and Density -		
S2.1	The height of buildings and structures maintain the Islands' low-key residential built form by preventing buildings from dominating the streetscape and Island landscape as viewed from a public place or Moreton Bay.	**P2.1**	Building height is 8.5 metres, 2 storey, or less above ground level.
S2.2	(1) Site coverage balances built and un-built areas by - (a) preventing buildings from dominating the streetscape and landscape as viewed from a public place or Moreton Bay; (b) facilitating retention or reinstatement of native plants; (c) ensuring adequate area for the disposal of wastewater on-site; (d) enhancing privacy between buildings; (e) providing useable open space for the occupants; (f) providing space for service functions including car parking and clothes drying.	**P2.2**	(1) Site coverage does not exceed - (a) for lots 600m^2 or less - 50 percent; or (b) for lots greater than 600m^2- 40 percent. **Note -** For residential uses, refer to Part 6 of the relevant use codes for specific assessment criteria for site coverage.
S2.3	(1) Building setbacks are consistent with the Islands' low-key residential built form by - (a) preventing buildings from dominating the streetscape; (b) allowing for the retention and reinstatement of native plants; (c) maximising usability of outdoor open space areas, privacy, breezes and solar access for the use and adjoining uses; (d) accommodating on-site waste water treatment systems; (2) Where the physical characteristics of the lot preclude the siting of a carport behind the front building line, a carport may be located between the building and the front property boundary.	**P2.3**	(1) Buildings and structures achieve the following setbacks - (a) front setbacks - (i) are a minimum of 6 metres; or (ii) are located between the setbacks of other dwelling houses in the street; or (iii) are a minimum of 3 metres where the dwelling house is to be sited closer to the street frontage due to – a. maintaining or reinstating native vegetation; or b. minimising impact on areas of habitat value; or c. accommodating an on site sewerage facility; (b) side and rear setbacks – (i) are a minimum of 1.5 metres where the building is less than 4.5 metres in

Assessable Development			
Specific Outcomes		**Probable Solutions**	
			height; or (ii) are a minimum of 2 metres where the building is between 4.5 metres and 7.5 metres in height; or (iii) are a minimum of 2 metres plus 0.5 metres for every 3 metres or part thereof by which the building exceeds 7.5 metres in height. (2) No probable solution identified. **Note -** Refer to the relevant use codes for specific assessment criteria.
S2.4	(1) Building design incorporates architectural elements that - (a) exhibit a high degree of interest through the use of colour, angles, materials and shadows; (b) incorporate window hoods, lightweight verandahs, decks, eaves or screens to create shade and cast shadow on the building form; (c) integrate with landscape planting and prevailing landscape features; (d) maintain human scale; (e) encourage safety and surveillance through orientating entrances and windows towards the street; (f) provide interesting, functional and attractive facades that contribute to the streetscape setting and pedestrian experience; (g) minimise adverse overshadowing and reflective impacts; (h) are articulated to minimise appearance of building bulk and size.	**P2.4**	(1) No probable solution identified.
S2.5	Glazing, roof materials and colours, minimise reflection and glare.	**P2.5**	No probable solution identified. **Note -** Refer to Part 9 - Schedule 7 - Roof Colour Chart
S2.6	(1) Fencing is consistent with the Islands' low-key residential built form.	**P2.6**	(1) Fences or walls - (a) forward of the front building line are less than 1.2 metres high; (b) on side boundaries on land

Assessable Development			
Specific Outcomes		**Probable Solutions**	
			adjoining Moreton Bay are less than 1.2 metres high and at least 60 percent transparent; (c) are not constructed along the foreshore.
S2.7	(1) Driveways, car parking areas and uncovered paved or hard landscaped areas are constructed to maintain natural drainage flows and maximise stormwater infiltration on-site.	**P2.7**	(1) Driveways and vehicle crossovers are - (a) a maximum of 3.6 metres wide including tapers; (b) limited to one per frontage; (c) located to minimise the removal of any existing street trees located within the road reserve. **Note -** For additional assessment criteria for driveways and vehicle crossover requirements for housing uses refer to Part 7 - Division 4 - Domestic Driveway Crossover Code.
S2.8	(1) Buildings design incorporates architectural elements and styles that reduce the visual impacts of the built form and are responsive to the natural environment and landscape setting.	**P2.8**	(1) Building design - (a) ensures that external masonry walls do not extend more than 4.5 metres above ground level; (b) includes the use of sheet materials, such as timber, metal or fibre cement for external cladding; (c) uses roofing material that is sheet metal, such as corrugated iron.
	Amenity -		
S3.1	Development does not adversely impact on the cultural heritage values of a registered heritage place(s) or character precinct.	**P3.1**	No probable solution identified.
S3.2	(1) Uses - (a) are capable of receiving solar access; (b) maintaining solar access to the habitable rooms and open space areas of surrounding uses.	**P3.2**	(1) No probable solution identified. **Note -** Refer to the relevant use code for specific solar access assessment criteria.
S3.3	(1) Building layout and design maximises privacy (visual and acoustic) through - (a) locating habitable rooms so they do no directly overlook habitable rooms of adjacent uses, either within or adjoining the use; (b) separating noise generating	**P3.3**	(1) No probable solution identified. **Note -** Refer to the relevant use codes for specific privacy assessment criteria.

Assessable Development			
Specific Outcomes		**Probable Solutions**	
	areas from sleeping areas.		
S3.4	(1) Private open space areas are - (a) clearly defined for private use; (b) easily accessible from living or common areas; (c) useable in size and dimension; (d) of a suitable slope; (e) capable of receiving sunlight	**P3.4**	(1) No probable solution identified. **Note -** Refer to the relevant use code for specific private open space assessment criteria.
S3.5	(1) Artificial lighting does not result in unreasonable disturbance to any person or activity; (2) Glare and reflection from the sun are minimised through material and glazing choice.	**P3.5**	(1) The vertical illumination resulting from direct, reflected or other incidental light emanating from the site does not exceed 8 lux when measured at any point 1.5 metres outside the boundary at or above ground level; (2) No probable solution identified.
S3.6	(1) Noise generated by the use or other development is compatible with that experienced in an Island residential environment.	**P3.6**	(1) The use or other development does not generate noise, measured as the $L_{Amax,adj,T}$ parameter, at the boundary of the lot or premises, greater than - (a) 5dB(A) above the background noise level between 7am to 10pm; or (b) 3dB(A) above the background noise level between 10pm to 7am. **Note -** The $L_{Amax,adj,T}$ parameter is defined in the *Noise Measurement Manual* (Environmental Protection Agency, 2000).
S3.7	Air quality impacts are eliminated or mitigated to a level that is compatible with an Island residential environment by not emitting vibration, odour, fumes, smoke, vapour, steam, soot, ash, dust, grit, oil, radio or electrical interference beyond the premises.	**P3.7**	No probable solution identified. **Note -** Refer to Part 11 - Planning Scheme Policy 5 - Environmental Emissions for further information on noise and air quality impacts.
S3.8	Traffic movements are compatible with that experienced in a residential environment.	**P3.8**	No probable solution identified.
	Environment - Landscaping - (1) Uses and other development maximise the retention or reinstatement of native plants within the development site and		
S4.1		**P4.1**	(1) Except in sub-area SR1 - buildings are sited to allow - (a) for lots equal to or less than 600m^2 - retain or replant five native trees or shrubs; or

Assessable Development			
Specific Outcomes		**Probable Solutions**	
	adjoining road reserve; (2) Plant species used for landscaping are native to the islands.		(b) for lots greater than 600m^2 retain or replant ten native trees or shrubs; (2) Species used for landscaping - (a) are selected from the native plants listed in Part 9 - Schedule 10 - Vegetation Species List; (b) along the road reserve are selected from Part 9 - Schedule 9 - Street Trees. **Note -** No vegetation is removed prior to commencement of construction without local government approval in accordance with *Local Law 6 - Protection of Vegetation*.
S4.2	In sub-area SR1 - significant scenic values and ecological areas and processes are identified, protected, managed and where necessary, restored to ensure their long-term viability.	**P4.2**	No probable solution identified. **Note -** Refer to Planning Part 11 - Planning Scheme Policy 4 - Ecological Impact.
S4.3	(1) Uses and other development are located and designed to minimise excavation and fill and - (a) prevent the removal of native plants; (b) maintain natural overland drainage systems; (c) protect the amenity of adjoining properties; (d) minimise erosion and sediment run-off.	**P4.3**	(1) No probable solution is identified. **Note -** Refer to Part 7 - Division 6 - Excavation and Fill Code for assessment criteria where the site requires earthworks.
S4.4	(1) Fences do not impede existing overland flow paths or storm surge.	**S4.4**	(1) No probable solution identified.
	Infrastructure -		
S5.1	(1) Infrastructure is provided in an orderly and cost effective manner that minimises disturbance and adverse impacts on the island environment and Moreton Bay.	**P5.1**	(1) No probable solutions identified.
S5.2	(1) All uses are serviced by infrastructure including - (a) reticulated water; (b) a reticulated sewerage; or (c) wastewater - (i) is treated and disposed of on-site subject to site, soil and locational	**P5.2**	(1) No probable solutions identified. **Note -** For additional assessment requirements refer to Part 8 - ■ Division 7 - Infrastructure Works Code;

Assessable Development			
Specific Outcomes		**Probable Solutions**	
	constraints; (ii) reduces the potential for - a. contaminating groundwater, surface water or wetland environments; b. risks to reticulated water supply and public health; (d) constructed road that minimise tree removal and the concentration of stormwater run-off; (e) energy; (f) telecommunications; (g) waste and recycling collection. (2) Stormwater management systems - (a) utilise a range of source, conveyance and discharge mechanisms, such as stormwater storage systems, retention trenches, to re-use and reduce stormwater runoff volumes, peaks and velocity; (b) ensure stormwater is discharged and dispersed naturally in a wide sheet flow to minimise erosion impacts; (c) maximises the use of permeable surfaces to allow infiltration or stormwater run-off.		■ Division 9 - Stormwater Management Code. (2) For residential development, except for a lot or premises that is located on the high side of a constructed road with kerb and channel, stormwater management systems - (a) incorporates methods other than direct piping of stormwater such as - (i) soakage chambers, absorption trenches, rubble pits that promote a wide sheet flow of stormwater; or (ii) rainwater tanks fitted with a first flush system.	
S5.3	(1) Waste and recycling is managed to minimise impacts on the environment and nearby premises by - (a) locating waste and recycling storage areas to protect amenity and to provide safe manual handling of containers; (b) screening waste and recycling container storage areas from view; (c) providing for the cleansing of containers in a manner that does not cause adverse environmental impacts; (2) Uses and other development - (a) provide safe and efficient manoeuvring for waste collection vehicles; (b) ensure all bulk waste and recycling containers are serviced off-street and not on	**P5.3**	(1) No probable solution identified. (2) No probable solution identified. (3) No probable solution identified. **Note -** Refer to Part 11 - Planning Scheme Policy 9 - Infrastructure Works – Chapter 16 – Waste Management for further information on waste and recycling container volume, storage, servicing, screening and cleansing. Refer to Part 8 - Division 1 - Access and Parking Code for waste collection vehicle servicing and manoeuvring assessment criteria.

Assessable Development			
Specific Outcomes		**Probable Solutions**	
	roads with public access; (c) ensure sufficient vertical clearance for container servicing; (d) ensure unobstructed access to containers by collection vehicles; (3) Waste and recycling storage is designed and located to - (a) provide adequate container volume to contain the waste and recyclables; (b) provide recycle containers in an equivalent or greater volume to waste containers; (c) provide a dedicated waste and recycling container storage area that is convenient and safe to use; (d) ensure containers are located on impermeable surfaces.		
S5.4	Community infrastructure is able to function effectively during and immediately after flood and storm surge events.	**P5.4**	Community infrastructure is located at or above the recommended flood levels in Table 2 - Recommended Flood levels for Community Infrastructure.
S5.5	Vehicular access is provided to the site from a road of sufficient standard, in terms of surface, gradient and structural capacity, to provide unrestricted flood free access at all times by a conventional two wheel drive vehicle.	**P5.5**	No probable solution identified. **Note -** For additional assessment criteria for driveway and vehicle crossover requirements for housing refer to Part 7 - Division 4 - Domestic Driveway Crossover Code.
S5.6	(1) Except for a dwelling house, uses and other development- (a) maximise opportunities to provide and to upgrade pedestrian and cycle paths; (b) integrate and support use of public transport; (c) ensures pedestrian, cycle and vehicle connectivity and permeability.	**P5.6**	(1) No probable solution identified. **Note -** For additional assessment criteria for provision, design and construction of utility infrastructure, roads and pedestrian and cycle paths refer to Part 8 - Division 7 - Infrastructure Works Code.

Table 1 - Inconsistent Uses and Other Development

Inconsistent Uses
Aged Persons and Special Needs Housing
Agriculture
Airport
Animal Keeping
Apartment Building
Brothel
Bulky Goods Showroom
Car Wash Facility
Cemetery
Commercial Office - where having more than 200m^2 gross floor area
Display and Sale Activity
Drive Through Restaurant
Dual Occupancy
Extractive Industry
Forestry
Funeral Parlour
Garden Centre
General Industry
Heavy Industry
High Impact Industry
Hospital
Hotel
Indoor Recreation Facility
Institution
Intensive Agriculture
Landscape Supply Depot
Marine Services
Mobile Home Park
Multiple Dwelling
Night Club
Outdoor Dining - where having more than 100m^2 gross floor area
Outdoor Recreation Facility
Passenger Terminal
Produce Store
Refreshment Establishment - where having more than 200m^2 gross floor area
Retail Warehouse
Roadside Stall
Rural Enterprise
Service Industry
Service Station
Shop - where having more than 200m^2 gross floor area
Tourist Accommodation
Tourist Park
Vehicle Depot
Vehicle Parking Station
Vehicle Repair Premises
Veterinary Surgery
Warehouse
Inconsistent Other Development
Creating lots by subdividing another lot by Standard Format Plan
Private Waterfront Structure

Table 2 - Recommended Flood Levels for Community Infrastructure

Type of Community Infrastructure	Recommended Flood Level AEP (ARI)
Emergency services, other than police facilities	0.2% (1 in 500 year ARI)
Emergency shelters	0.5% (1 in 200 year ARI)
Police facilities	0.5% (1 in 200 year ARI)
Hospitals and associated facilities	0.2% (1 in 500 year ARI)
Stores of valuable records or items of historic or cultural significance such as galleries and libraries	0.5% (1 in 200 year ARI)
Power stations	0.2% (1 in 500 year ARI)
Major switch yards	0.2% (1 in 500 year ARI)
Substations	0.5% (1 in 200 year ARI)
Sewerage treatment plants	1% (1 in 100 year ARI)
Water treatment plants	0.5% (1 in 200 year ARI)
■ State-controlled roads ■ Works of an electricity entity not otherwise listed in this table ■ Railway lines, stations and associated facilities ■ Aviation facilities ■ Communication network facilities	No specific recommended flood level but development proponents should ensure that the infrastructure is optimally located and designed to achieve suitable levels of service, having regard to the processes and policies of the administering government agency.

Reference - *State Planning Policy Guideline 1/03: Mitigating the Adverse Impacts of Flood, Bushfire and Landslide.*

Division 24 - Urban Residential Zone

4.24.1 Introduction

(1) This division contains the provisions for the Urban Residential Zone. They are -

(a) The Urban Residential Zone Tables of Assessment, that incorporates -
- (i) Levels of assessment for development in the Urban Residential Zone (section 4.24.2);
- (ii) Assessment criteria for development in the Urban Residential Zone (section 4.24.3);
- (iii) Urban Residential Zone - Table of Assessment for Material Change of Use of Premises (section 4.24.4);
- (iv) Urban Residential Zone - Table of Assessment for Other Development not associated with a Material Change of Use of Premises (section 4.24.5).

(b) The Urban Residential Zone Code, that incorporates -
- (i) Compliance with the Urban Residential Zone Code (section 4.24.6);
- (ii) Overall Outcomes for the Urban Residential Zone Code (section 4.24.7);
- (iii) Specific Outcomes and Probable Solutions applicable to Assessable Development (section 4.24.8).

4.24.2 Levels of assessment for development in the Urban Residential Zone

(1) Sections 4.24.4 and 4.24.5 identify the level of assessment for development in the Urban Residential Zone, as follows -

(a) section 4.24.4 Urban Residential Zone - Table of Assessment for Making a Material Change of Use of Premises[4.197] -
- (i) column 1 identifies uses that are exempt, self-assessable or assessable;
- (ii) column 2 identifies the level of assessment for the uses listed in column 1;
- (iii) The use is impact assessable where -
  - a. it is defined in Part 9 - Schedule 3 - Dictionary, Division 1 - Uses and is not listed in column 1; or
  - b. it is listed in column 1 and does not comply with the level of assessment qualifications listed in column 2; or
  - c. it is not defined in Part 9 - Schedule 3 - Dictionary, Division 1 - Uses.

(b) section 4.24.5 Urban Residential Zone - Table of Assessment for Other Development not associated with a Material Change of Use of Premises -
- (i) column 1 identifies other development that is exempt, self-assessable or assessable;
- (ii) column 2 identifies the level of assessment for other development listed in column 1;
- (iii) where the other development is not listed in column 1 it is exempt.

(2) Overlays may alter the level of assessment identified in (1)(a) and (b)[4.198].

[4.197] Works associated with an application for a material change of use of premises may be assessed together with the material change of use.

[4.198] Refer to Part 5 - Overlays to determine the level of assessment for the use or other development where an Overlay affects the lot and Part 1, section 1.2.5(10)(f) that explains how the highest level of assessment applies.

4.24.3 Assessment criteria for development in the Urban Residential Zone

(1) Development in the Urban Residential Zone is assessed against the assessment criteria listed in column 3 of sections 4.24.4 and 4.24.5, as follows -

(a) acceptable solutions of applicable codes for self-assessable development; or

(b) applicable codes for code assessable development.

(2) Self-assessable development that does not comply with all the acceptable solutions of the applicable codes is assessable development. Non compliance with only the acceptable solutions for self-assessable development in relation to setbacks and site cover under the QDC or nominated "Alternative Provisions" or Building Assessment Provisions will not elevate the level of assessment of a proposal from self assessable development to assessable development under the Redlands Planning Scheme. In these instances, the local government will undertake the functions of a referral agency with Concurrence Agency jurisdiction under IPA to assess and determine these matters.

(3) Impact assessable development will be assessed against all relevant provisions of the Redlands Planning Scheme.

Note -

- The level of assessment indicated within section 4.24.4 - Urban Residential Zone - Table of Assessment for Material Change of Use of Premises may be affected by Division 2 of the Regulatory Provisions of the *SEQ* Regional Plan 2005 - 2026.
- The level of assessment for reconfiguration as indicated within section 4.24.5 - Urban Residential Zone - Table of Assessment for Other Development not associated with a Material Change of Use of Premises, where within the Regional Landscape and Rural Production Area or Investigation Area of the *SEQ Regional Plan 2005 - 2026* -
  - complies with Division 3 of the Regulatory Provisions;
  - has a minimum lot size of 100 hectares, unless the subdivision meets an exclusion documented in Division 3.

Note -

Summary of Urban Residential Zone sub-areas	
Sub-area	**Description**
Sub-area UR1	Multiple locations
Sub-area UR2	Mount Cotton Village
Sub-area UR3	Amity Point on North Stradbroke Island

4.24.4 Urban Residential Zone - Table of Assessment for Material Change of Use of Premises

Urban Residential Zone - Table of Assessment for Material Change of Use of Premises

column 1	column 2	column 3
Use[4.199]	**Level of Assessment**[4.200]	**Assessment Criteria**
Aged Persons and Special Needs Housing	Code Assessable If - (1) In sub-area - (a) UR1; or (b) UR2; (2) The building height is - (a) 8.5 metres or less above ground level; (b) 2 storey or less Otherwise - Impact Assessable	■ Urban Residential Zone Code ■ Aged Persons and Special Needs Housing Code ■ Access and Parking Code ■ Development Near Underground Infrastructure Code ■ Erosion Prevention and Sediment Control Code ■ Excavation and Fill Code ■ Infrastructure Works Code ■ Landscape Code ■ Stormwater Management Code
Bed and Breakfast	Code Assessable	■ Urban Residential Zone Code ■ Bed and Breakfast Code ■ Infrastructure Works Code ■ Landscape Code
Caretakers Dwelling	Code Assessable	■ Urban Residential Zone Code ■ Caretakers Dwelling Code
Display Dwelling	Code Assessable	■ Urban Residential Zone Code ■ Display Dwelling Code
Dual Occupancy	Code Assessable If - (1) The building height is - (a) 8.5 metres or less above ground level; (b) 2 storey or less; (2) The use does not involve built to boundary walls that - (a) are greater than 7 metres in total length; (b) are greater than 3 metres in height; (c) have windows or doors; (3) The premises is - (a) greater than 800m^2 in area; (b) has a frontage of 20 metres or more Otherwise - Impact Assessable	■ Urban Residential Zone Code ■ Dual Occupancy Code ■ Development Near Underground Infrastructure Code ■ Domestic Driveway Crossover Code ■ Erosion Prevention and Sediment Control Code ■ Excavation and Fill Code ■ Infrastructure Works Code ■ Landscape Code ■ Stormwater Management Code

[4.199] See Schedule 3 - Dictionary, Division 1 - Uses.
[4.200] See Schedule 3 - Dictionary, Division 2 - Administrative Terms for a definition of level of assessment.

Urban Residential Zone - Table of Assessment for Material Change of Use of Premises

column 1	column 2	column 3
Use[4.199]	**Level of Assessment**[4.200]	**Assessment Criteria**
Dwelling House	Self-Assessable If - (1) Not in sub-area UR3; (2) Complying with the assessment criteria being the acceptable solutions listed in column 3 **Note -** Non-compliance with the acceptable solutions for self assessable development in relation to setbacks, site cover and built to boundary walls, or nominated "Alternative Provisions" or Building Assessment Provisions identified in the Dwelling House Code will not elevate the level of assessment of a proposal from self assessable development to assessable development under the Redlands Planning Scheme. Refer to section 6.11.2 of the Dwelling House Code. Code Assessable If - (1) Not self-assessable; (2) The building height is - (a) 8.5 metres or less above ground level; (b) 2 storey or less; (3) The use does not involve built to boundary walls that - (a) are greater than 7 metres in total length; (b) are greater than 3 metres in height; (c) have windows or doors Otherwise - Impact Assessable	■ Acceptable Solutions in section 6.11.5 of the Dwelling House Code ■ Acceptable Solutions of section 8.5.4 of the Development Near Underground Infrastructure Code ■ Acceptable Solutions in section 7.4.4 of the Domestic Driveway Crossover Code ■ Acceptable Solutions in section 8.6.4 of the Erosion Prevention and Sediment Control Code ■ Acceptable Solutions A1.(1)(a) and (c) in section 7.6.4 of the Excavation and Fill Code ■ Urban Residential Zone Code ■ Dwelling House Code ■ Development Near Underground Infrastructure Code ■ Domestic Driveway Crossover Code ■ Erosion Prevention and Sediment Control Code ■ Excavation and Fill Code ■ Infrastructure Works Code ■ Stormwater Management Code
Estate Sales Office	Self-Assessable If complying with the assessment criteria being the acceptable solutions listed in column 3 Code Assessable If not self-assessable	■ Acceptable Solutions in section 6.12.4 of the Estate Sales Office Code ■ Urban Residential Zone Code ■ Estate Sales Office Code ■ Access and Parking Code ■ Development Near Underground Infrastructure Code

Urban Residential Zone - Table of Assessment for Material Change of Use of Premises

column 1	column 2	column 3
Use[4.199]	**Level of Assessment**[4.200]	**Assessment Criteria**
Home Business	Self-Assessable If complying with the assessment criteria being the acceptable solutions listed in column 3 Code Assessable If not self-assessable	■ Acceptable Solutions in section 6.15.4 of the Home Business Code ■ Urban Residential Zone Code ■ Home Business Code ■ Access and Parking Code And where being carried out in a Domestic Outbuilding - ■ Domestic Outbuilding Code ■ Development Near Underground Infrastructure Code ■ Erosion Prevention and Sediment Control Code ■ Excavation and Fill Code
Minor Utility	Exempt	
Multiple Dwelling	Code Assessable If - (1) In sub-area - (a) UR1 or (b) UR2; (2) The building height is - (a) 8.5 metres or less above ground level; (b) 2 storey or less; (3) The premises is - (a) 1200m^2 or more in area; (b) has a frontage of 20 metres or more Otherwise - Impact Assessable	■ Urban Residential Zone Code ■ Multiple Dwelling Code ■ Access and Parking Code ■ Development Near Underground Infrastructure Code ■ Erosion Prevention and Sediment Control Code ■ Excavation and Fill Code ■ Infrastructure Works Code ■ Landscape Code ■ Stormwater Management Code
Park	Self-Assessable If - (1) Being undertaken by the local government; (2) On land in the ownership or control of the local government; (3) Complying with the assessment criteria being the acceptable solutions listed in column 3 Code Assessable If not self-assessable	■ Acceptable Solutions in section 6.20.4 of the Park Code ■ Acceptable Solutions of section 8.5.4 of the Development Near Underground Infrastructure Code ■ Urban Residential Zone Code ■ Park Code ■ Access and Parking Code ■ Development Near Underground Infrastructure Code

Urban Residential Zone - Table of Assessment for Material Change of Use of Premises

column 1	column 2	column 3
Use[4.199]	**Level of Assessment**[4.200]	**Assessment Criteria**
		■ Infrastructure Works Code ■ Landscape Code ■ Stormwater Management Code
Relatives Apartment	Self-Assessable If - (1) Not in sub-area UR3; (2) Complying with the assessment criteria being the acceptable solutions listed in column 3 Code Assessable If not self-assessable	■ Acceptable Solutions in section 6.21.4 of the Relatives Apartment Code ■ Acceptable Solutions in section 8.5.4 of the Development Near Underground Infrastructure Code ■ Acceptable Solutions in section 8.6.4 of the Erosion Prevention and Sediment Control Code ■ Acceptable Solutions A1.(1)(a) and (c) in section 7.6.4 of the Excavation and Fill Code ■ Urban Residential Zone Code ■ Relatives Apartment Code ■ Development Near Underground Infrastructure Code ■ Erosion Prevention and Sediment Control Code ■ Excavation and Fill Code ■ Stormwater Management Code
Road	Exempt	
Small Lot House	Code Assessable If - (1) The building height is - (a) 8.5 metres or less above ground level; (b) 2 storey or less; (2) The use does not involve built to boundary walls that - (a) are greater than 7 metres in total length; (b) are greater than 3 metres in height; (c) have windows or doors; (3) The premises - (a) is greater than 400m^2 and less than 500m^2 in area; (b) where the premises exists at the time the planning scheme has effect, has a frontage of 10 metres or more; or (c) has a minimum frontage of 10 metres. Otherwise - Impact Assessable	■ Urban Residential Zone Code ■ Small Lot House Code ■ Development Near Underground Infrastructure Code ■ Domestic Driveway Crossover Code ■ Erosion Prevention and Sediment Control Code ■ Excavation and Fill Code ■ Infrastructure Works Code ■ Stormwater Management Code

Urban Residential Zone - Table of Assessment for Material Change of Use of Premises

column 1	column 2	column 3
Use[4.199]	**Level of Assessment**[4.200]	**Assessment Criteria**
Telecommunications Facility	Self-Assessable[4.201] If complying with the assessment criteria being the acceptable solutions listed in column 3 Otherwise - Impact Assessable	■ Acceptable Solutions in section 6.26.4 of the Telecommunications Facility Code ■ Acceptable Solutions in section 8.5.4 of the Development Near Underground Infrastructure Code ■ Acceptable Solutions in section 8.6.4 of the Erosion Prevention and Sediment Control Code ■ Acceptable Solutions A1.(1)(a) and (c) in section 7.6.4 of the Excavation and Fill Code
Utility Installation	Code Assessable	■ Urban Residential Zone Code ■ Access and Parking Code ■ Development Near Underground Infrastructure Code ■ Erosion Prevention and Sediment Control Code ■ Excavation and Fill Code ■ Landscape Code ■ Stormwater Management Code
Defined uses not listed in column 1	Impact Assessable	
Defined uses listed in column 1 that do not comply with the level of assessment qualifications in column 2	Impact Assessable	
Uses not defined in Part 9 - Schedule 3 - Dictionary, Division 1 - Uses	Impact Assessable	

[4.201] If not self-assessable, a Telecommunication Facility in the Urban Residential Zone is impact assessable.

4.24.5 Urban Residential Zone - Table of Assessment for Other Development not associated with a Material Change of Use of Premises

Urban Residential Zone - Table of Assessment for Other Development

column 1	column 2	column 3
Other Development	**Level of Assessment**[4.202]	**Assessment Criteria**
Reconfiguration for -		
Creating lots by subdividing another lot by Standard Format Plan[4.203]	Code Assessable If - (1) Not in sub-area UR3; (2) The proposal contains 50 or less lots; or (3) Lot frontage is 10 metres or greater except for irregular or internal lots.[4.203A] Otherwise - Impact Assessable	■ Urban Residential Zone Code ■ Reconfiguration Code ■ Development Near Underground Infrastructure Code ■ Excavation and Fill Code ■ Infrastructure Works Code ■ Stormwater Management Code
Creating lots by subdividing another lot by - ■ Building Format Plan; or ■ Volumetric Format Plan	Code Assessable	■ Urban Residential Zone Code ■ Reconfiguration Code
■ Rearranging the boundaries of a lot by registering a plan of subdivision; or ■ Dividing land into parts by Agreement; or ■ Creating an easement giving access to a lot from a constructed road	Code Assessable	■ Reconfiguration Code
Building Work for -		
Communications Structures	Exempt If minor building work[4.204] Self-Assessable If - (1) Not exempt; (2) Complying with the assessment criteria being the acceptable solutions	■ Acceptable Solutions in section 7.2.4 of the Communications Structures Code

[4.202] See Part 9 - Schedule 3 - Dictionary, Division 2 - Administrative Terms for a definition of level of assessment.
[4.203] Whether or not having a Community Management Statement.
[4.203A] Small lots with a frontage of less than 10 metres are Impact Inconsistent. Refer to Table 1 – Inconsistent Uses and Other Development
[4.204] See Part 9 - Schedule 3 - Dictionary, Division 2 - Administrative Terms for a definition of minor building work.

Urban Residential Zone - Table of Assessment for Other Development

column 1	column 2	column 3
Other Development	**Level of Assessment**[4.202]	**Assessment Criteria**
	listed in column 3 Code Assessable If not self-assessable	■ Communications Structures Code
Domestic Additions	Exempt If minor building work[4.204] Self-Assessable If - (1) Not exempt; (2) Not in sub-area UR3; (3) Complying with the assessment criteria being the acceptable solutions listed in column 3 **Note -** Non-compliance with the acceptable solutions for self assessable development in relation to setbacks, site cover and built to boundary walls, or nominated "Alternative Provisions" or Building Assessment Provisions identified in the Domestic Additions Code will not elevate the level of assessment of a proposal from self assessable development to assessable development under the Redlands Planning Scheme. Refer to section 7.3.2 of the Domestic Additions Code. Code Assessable If - (1) Not self-assessable; (2) The building height is - (a) 8.5 metres or less above ground level; (b) 2 storey or less; (3) The addition does not involve built to boundary walls that - (a) are greater than 7 metres in total length; (b) are greater than 3 metres in height; (c) have windows or doors Otherwise - Impact Assessable	■ Acceptable Solutions in section 7.3.5 of the Domestic Additions Code ■ Acceptable Solutions in section 8.5.4 of the Development Near Underground Infrastructure Code ■ Acceptable Solutions in section 8.6.4 of the Erosion Prevention and Sediment Control Code ■ Acceptable Solutions A1.(1)(a) and (c) in section 7.6.4 of the Excavation and Fill Code ■ Urban Residential Zone Code ■ Domestic Additions Code ■ Development Near Underground Infrastructure Code ■ Erosion Prevention and Sediment Control Code ■ Excavation and Fill Code ■ Infrastructure Works Code ■ Stormwater Management Code

Urban Residential Zone - Table of Assessment for Other Development

column 1	column 2	column 3
Other Development	**Level of Assessment**[4.202]	**Assessment Criteria**
Domestic Outbuilding	Exempt If minor building work[4.204] Self-Assessable If - (1) Not exempt; (2) Not in sub-area UR3; (3) Complying with the assessment criteria being the acceptable solutions listed in column 3 **Note -** Non-compliance with the acceptable solutions for self assessable development in relation to setbacks, site cover and built to boundary walls, or nominated "Alternative Provisions" or Building Assessment Provisions identified in the Domestic Outbuilding Code will not elevate the level of assessment of a proposal from self assessable development to assessable development under the Redlands Planning Scheme. Refer to section 7.5.2 of the Domestic Outbuilding Code. Code Assessable If not self-assessable	■ Acceptable Solutions in section 7.5.5 of the Domestic Outbuilding Code ■ Acceptable Solutions in section 8.5.4 of the Development Near Underground Infrastructure Code ■ Acceptable Solutions in section 8.6.4 of the Erosion Prevention and Sediment Control Code ■ Acceptable Solutions A1.(1)(a) and (c) in section 7.6.4 of the Excavation and Fill Code ■ Urban Residential Zone Code ■ Domestic Outbuilding Code ■ Development Near Underground Infrastructure Code ■ Erosion Prevention and Sediment Control Code ■ Excavation and Fill Code
On-site raising or relocation of an existing dwelling unit	Self-Assessable If complying with the assessment criteria being the acceptable solutions listed in column 3 **Note -** Non-compliance with the acceptable solutions for self assessable development in relation to setbacks, site cover and built to boundary walls, or nominated "Alternative Provisions" or Building Assessment Provisions identified in the On-site Raising	■ Acceptable Solutions in section 7.7.5 of the On-Site Raising or Relocation Code ■ Acceptable Solutions in section 8.5.4 of the Development Near Underground Infrastructure Code ■ Acceptable Solutions in section 8.6.4 of the Erosion Prevention and Sediment Control Code ■ Acceptable Solutions A1.(1)(a) and (c) in section 7.6.4 of the Excavation and Fill Code

Urban Residential Zone - Table of Assessment for Other Development

column 1	column 2	column 3
Other Development	**Level of Assessment**[4.202]	**Assessment Criteria**
	or Relocation Code will not elevate the level of assessment of a proposal from self assessable development to assessable development under the Redlands Planning Scheme. Refer to section 7.7.2 of the On-site Raising or Relocation Code. Code Assessable If - (1) Not self-assessable; (2) The building height is - (a) 8.5 metres or less above ground level; (b) 2 storey or less; (3) The relocation does not result in built to boundary walls that - (a) are greater than 7 metres in total length; (b) are greater than 3 metres in height; (c) have windows or doors Otherwise - Impact Assessable	■ Urban Residential Zone Code ■ On-Site Raising and Relocation Code ■ Development Near Underground Infrastructure Code ■ Erosion Prevention and Sediment Control Code ■ Excavation and Fill Code ■ Infrastructure Works Code ■ Stormwater Management Code
Private Swimming Pool	Self-Assessable If complying with the assessment criteria being the acceptable solutions listed in column 3 **Note -** Non-compliance with the acceptable solutions for self assessable development in relation to setbacks, and access and parking, or nominated "Alternative Provisions" or Building Assessment Provisions identified in the Private Swimming Pool Code will not elevate the level of assessment of a proposal from self assessable development to assessable development under the Redlands Planning Scheme. Refer to section 7.8.2 of the Private Swimming Pool Code. Code Assessable If not self-assessable	■ Acceptable Solutions in section 7.8.5 of the Private Swimming Pool Code ■ Private Swimming Pool Code ■ Development Near Underground Infrastructure Code ■ Erosion Prevention and

Urban Residential Zone - Table of Assessment for Other Development

column 1	column 2	column 3
Other Development	**Level of Assessment**[4.202]	**Assessment Criteria**
		Sediment Control Code ■ Excavation and Fill Code
Private Tennis Court	Self-Assessable If complying with the assessment criteria being the acceptable solutions listed in column 3 Code Assessable If not self-assessable	■ Acceptable Solutions in section 7.9.4 of the Private Tennis Court Code ■ Private Tennis Court Code ■ Erosion Prevention and Sediment Control Code ■ Excavation and Fill Code ■ Landscape Code
Operational Work for -		
Constructing a Domestic Driveway Crossover	Self-Assessable If complying with the assessment criteria being the acceptable solutions listed in column 3 Code Assessable If not self-assessable	■ Acceptable Solutions in section 7.4.4 of the Domestic Driveway Crossover Code ■ Domestic Driveway Crossover Code
Excavation and Fill	Exempt If - (1) Disturbing less than $50m^3$ of soil; (2) A height/depth not exceeding 300mm measured from ground level Self-Assessable If - (1) Not exempt; (2) Not in sub-area UR3; (3) Complying with the assessment criteria being the acceptable solutions listed in column 3 Code Assessable If - (1) Not self-assessable; (2) Not in sub-area UR3 Otherwise - Impact Assessable	 ■ Acceptable Solutions in section 8.6.4 of the Erosion Prevention and Sediment Control Code ■ Acceptable Solutions A1.(1)(b),(c),(d) in section 7.6.4 of the Excavation and Fill Code ■ Erosion Prevention and Sediment Control Code ■ Excavation and Fill Code

Urban Residential Zone - Table of Assessment for Other Development

column 1	column 2	column 3
Other Development	**Level of Assessment**[4.202]	**Assessment Criteria**
Placing an Advertising Device on Premises	Self-Assessable If complying with the assessment criteria being the acceptable solutions listed in column 3 Code Assessable If not self-assessable	■ Acceptable Solutions in section 7.1.4 of the Advertising Devices Code ■ Advertising Devices Code
Operational Work for Reconfiguring a Lot (by Standard Format Plan)	Code Assessable	■ Reconfiguration Code ■ Development Near Underground Infrastructure Code ■ Erosion Prevention and Sediment Control Code ■ Excavation and Fill Code ■ Infrastructure Works Code ■ Landscape Code ■ Stormwater Management Code
Private Waterfront Structure	Code Assessable	■ Private Waterfront Structure Code ■ Development Near Underground Infrastructure Code ■ Erosion Prevention and Sediment Control Code ■ Excavation and Fill Code
All other development not listed in column 1	Exempt	

4.24.6 Compliance with Urban Residential Zone Code

(1) Development that is consistent with the specific outcomes in section 4.24.8 complies with the Urban Residential Zone Code.

Note -

The following planning scheme policies will assist in achieving specific outcomes within the Urban Residential Zone Code -

- Planning Scheme Policy 5 - Environmental Emissions;
- Planning Scheme Policy 9 - Infrastructure Works;
- Planning Scheme Policy 12 - Social and Economic Impact Assessment.

4.24.7 Overall Outcomes for Urban Residential Zone Code

(1) The overall outcomes are the purpose of the Urban Residential Zone Code.

(2) The overall outcomes sought for the Urban Residential Zone Code are described by five key characteristics[4.205] -

(a) Uses and Other Development;
(b) Built Form and Density;
(c) Amenity;
(d) Environment;
(e) Infrastructure.

Each of these is detailed below.

(a) Uses and Other Development

(i) Provide for a range of residential uses that -
a. are predominantly low-rise detached houses on individual lots of various sizes;
b. maximise the supply of residential land through infill development;
c. provide for housing choice and affordability;
d. encourage opportunities for working from home;
e. where in sub-area UR1 and UR2 - provide an increased range of residential uses including multiple dwellings, and aged persons and special needs housing.

(ii) Provide for a limited range of non-residential uses that -
a. fulfill a local community need and provide opportunities for social interaction and activity;
b. are highly accessible to the residents served;
c. are located on the major road network rather than local residential streets;
d. do not compromise the role and function of centres;
e. do not result in commercial ribbon development.

(b) Built Form and Density

(i) The scale of uses and other development contribute to a predominantly detached residential built form by -
a. limiting building height to maintain a low-rise appearance;
b. buildings are sited and of a width, depth and bulk that are consistent with the lot size and a residential streetscape;
c. in sub-areas and for non-residential uses - being consistent with the preferred building types expected in the zone;
d. in sub-area UR2 - site coverage is reduced to facilitate the retention of native plants and integrated the built form with the surrounding landscape setting.

[4.205] In combination, the overall outcomes in section 4.24.7(2)(a)-(e) define the character of the Urban Residential Zone.

(ii) The density of uses and other development -
   a. utilise land efficiently through provision of a range of lot sizes and infill development that respects existing streetscapes in established areas;
   b. where aged persons and special needs housing provide a range of accommodation types that, in total, is consistent with the predominant density in the zone.

(iii) Lot layout is climatically responsive.

(iv) Buildings incorporate a mix of architectural elements and styles that are responsive to local conditions and styles.

(v) In sub-area UR2 - building design incorporate architectural styles and elements that reduce the visual impacts of the built form and are responsive to the natural landscape setting.

(vi) In sub-area UR3 - buildings and structures are demountable and capable of being removed.

(c) Amenity

(i) Uses and other development achieves a high standard of amenity by -
   a. protecting and enhancing of places of cultural significance or streetscape value;
   b. having access to natural light and ventilation, privacy and private open space commensurate with the use;
   c. providing high quality useable public open space that meets the needs of the community;
   d. maintaining the safety of people and property;
   e. eliminating or mitigating impacts associated with light, noise, air and traffic.

(ii) The scale, operational attributes and impacts of non-residential uses maintains a high standard of residential amenity.

(d) Environment

(i) Uses and other development minimise adverse impacts on environmental and scenic values by -
   a. responding to topographical features;
   b. minimising the need for excavation and fill;
   c. protecting the site from erosion;
   d. maximising the retention of native plants;
   e. maximising the use of native plants that are characteristic to the area;
   f. incorporating best practice stormwater management and enhancing water quality;
   g. in sub-area UR2 - retention of native plants and landscape planting is used to screen built forms from the streetscape and broader viewing areas.

(e) Infrastructure

(i) Uses and other development -
   a. make efficient use of existing infrastructure;
   b. provide for the extension of infrastructure in an orderly and cost effective manner;
   c. do not result unacceptable risk to community infrastructure.

(ii) Uses and other development are serviced by infrastructure including -
   a. reticulated water;
   b. reticulated sewerage; or
   c. where the site is not able to be connected to a reticulated sewerage system, wastewater is treated and disposed of on-site subject to site, soil and locational constraints;
   d. stormwater drainage;
   e. constructed road access;
   f. energy;
   g. telecommunications,
   h. waste and recycling collection;

i. in sub-area UR2 - infrastructure is provided in accordance with any infrastructure agreement applying to the area.

(iii) Uses and other development reinforce an integrated, legible, efficient and safe movement network that -

a. incorporate a full range of movement modes including public transport, passenger vehicles, walking and cycling;

b. provide pedestrian, cycle and vehicle movement networks that maximise connectivity, permeability and ease of mobility.

Note -

Summary of Urban Residential Zone Sub-areas	
Sub-area	**Description**
Sub-area UR1	Multiple locations
Sub-area UR2	Mount Cotton Village
Sub-area UR3	Amity Point on North Stradbroke Island

4.24.8 Specific Outcomes and Probable Solutions applicable to Assessable Developm ent

Assessable Development			
Specific Outcomes		**Probable Solutions**	
	Uses and Other Development -		
S1.1	Uses and other development identified as inconsistent in Table 1 are not established in the zone.	**P1.1**	No probable solution identified.
S1.2	(1) In sub-area UR1 - incorporates an increased range of residential uses; (2) In sub-area UR2 - incorporates a greater range of residential uses and these are located with easy walking distance of centres, community uses and public transport services.	**P1.2**	(1) Sub-area UR1 is primarily utilised for - (a) multiple dwellings; (b) aged persons and special needs housing that provides a mix of dependent, semi-dependent and independent accommodation; (2) In sub-area UR2 - incorporates a range of housing types including multiple dwellings that are - (a) located within 500 metres of a centre, community facility or bus stop with a minimum of 10 services each week day; or (b) form a mixed use component of centre or community facility uses.
S1.3	(1) Non-residential uses such as local shopping, medical facilities, churches, child care centres and the like may be contemplated in appropriate locations and subject to detailed development requirements including - (a) being located on the major road network; (b) co-locating with other similar uses; (c) providing only for the identified convenience needs of the local community; (d) not impacting on the role and function of the City's network of centres; (e) resulting in positive economic and social benefits for the local community. **Note -** Refer to Part 11 - Planning Scheme Policy 12 - Social and Economic Impact Assessment.	**P1.3**	(1) Non-residential uses - (a) locate on the corner of collector or higher order roads; (b) where of a - (i) retail or commercial nature - a. are co-located with other similar uses; b. do not exceed 600m^2 gross floor area, with no one tenancy exceeding 400m^2 gross floor area; c. are not within 800 metres of any similar uses or a centre zone; (ii) community facilities, health care centres, childcare centres, or uses of a similar community service nature - a. are 400m^2 or less gross floor area per use; b. are co-located with other similar uses or retail or commercial uses.

Assessable Development			
Specific Outcomes		**Probable Solutions**	
S1.4	(1) The following uses are encouraged – (a) bed and breakfast; (b) home business; (c) relatives apartment.	**P1.4**	(1) No probable solution identified. **Note -** Refer to Part 6 - ■ Division 5 - Bed and Breakfast Code; ■ Division 15 - Home Business Code; ■ Division 21 - Relatives Apartment Code.
	Built Form and Density -		
S2.1	(1) The height of buildings and structures maintain a low-rise built form by - (a) being compatible with the existing streetscape; (b) adopting the predominant height of surrounding buildings; (2) Where a use proposes a building height greater than an adjoining building, site layout and building design minimises any potential impacts of overshadowing and loss of privacy.	**P2.1**	(1) Overall building height is 8.5 metres or less above ground level; (2) No probable solution identified. **Note -** Refer to the relevant use code for specific building height assessment criteria.
S2.2	(1) Site coverage of buildings balances built and un-built areas to - (a) provide solar access to living and open space areas; (b) assist in retaining existing native plants; (c) enhance privacy between buildings; (d) provide useable open space for the occupants; (e) provide space for service functions including car parking and clothes drying; (f) if in sub-area UR2 - ensure built form integrates with native plants and does not visually dominate the landscape setting.	**P2.2**	(1) Site coverage is a maximum of - (a) 50 percent, unless otherwise specified in the relevant use code; or (b) in sub-area UR2 - 40 percent. **Note -** Refer to the relevant use code for specific site coverage assessment criteria.
S2.3	(1) Setbacks - (a) complement existing front setbacks in the street; (b) maximise the usability of side and rear setbacks for outdoor open space areas, privacy and solar access for the occupants and adjoining uses.	**P2.3**	(1) No probable solution identified. **Note -** Refer to the relevant use code for specific setback assessment criteria.

Assessable Development			
Specific Outcomes		**Probable Solutions**	
S2.4	(1) Reconfiguration provides a mix of lot sizes to accommodate a variety of dwelling types; (2) Dwelling unit density is compatible with the detached low-rise character of the zone; (3) For aged persons and special needs housing, density increases depending on the type of accommodation provided.	**P2.4**	(1) Reconfiguration achieves an average net residential density of - (a) 12 - 15 lots per hectare; (b) or in sub-area UR2 - 10 - 12 lots per hectare across the sub-area; (2) Residential development achieves a density of not greater than 1 dwelling unit per - (a) 400m^2; or (b) in sub-area UR2 - 450m^2; (3) The density of aged persons and special needs housing is based on the accommodation type provided - (a) independent units = 1 dwelling unit per 400m^2 (b) semi-dependent units = 1 dwelling per 200m^2; (c) dependent units = 1 bed per 100m^2.
S2.5	(1) Building design incorporates architectural elements that - (a) exhibit a high degree of interest through the use of colour, angles and materials; (b) include verandahs, decks, eaves, window hoods or similar elements to create shade and cast shadow; (c) promote an attractive streetscape and encourage safety and surveillance through orientating entrances towards the street; (d) minimise adverse overshadowing and reflective impacts on adjoining dwelling units; (e) integrate with landscape setting and natural environment features.	**P2.5**	(1) No probable solution identified. **Note -** Refer to the relevant use code for specific built form assessment criteria.
S2.6	(1) In sub-area UR2 - building design incorporate architectural styles and elements that reduce the visual impacts of the built form and are responsive to the natural landscape setting.	**P2.6**	(1) In sub-area UR2 - (a) external masonry building walls do not extend more than 4.5 metres above ground level; (b) includes the use of sheet materials, such as timber, metal or fibre cement for external cladding; (c) roofing material is sheet metal, such as corrugated iron.
S2.7	(1) In sub-area UR3 - (a) buildings or structures are removable or demountable; (b) buildings, structures or infrastructure associated with	**P2.7**	(1) No probable solution identified.

Assessable Development			
Specific Outcomes		**Probable Solutions**	
	the use or other development do not extend any further seaward than existing uses and development on the site.		
S2.8	(2) Reconfiguration results in pleasant environments and reduced energy consumption through being climatically responsive by - (a) lots being orientated and of a length and width to – (i) maximise solar access to the north in winter; (ii) minimise solar access to the east and west in summer; (b) having regard to the topography of the land.	**S2.8**	(1) No probable solution identified. **Note -** Refer to the relevant use code or Part 7- Division 11 - Reconfiguration Code for specific climate control assessment criteria.
	Amenity -		
S3.1	Uses and other development do not adversely impact on the cultural heritage values of a registered heritage place(s) or character precinct.	**P3.1**	No probable solution identified.
S3.2	(1) Uses are capable of - (a) receiving solar access; (b) maintaining solar access to the habitable rooms and open space areas of surrounding uses.	**P3.2**	(1) No probable solution identified. **Note -** Refer to the relevant use code for specific solar access assessment criteria.
S3.3	(1) Building layout and design maximise privacy (visual and acoustic) through - (a) locating habitable rooms so they do not directly overlook habitable rooms of adjacent uses, either within or adjoining the use; (b) separating noise generating areas from sleeping areas.	**P3.3**	(1) No probable solution identified. **Note -** Refer to the relevant use code for specific privacy assessment criteria.
S3.4	(1) Private open space areas are - (a) clearly defined for private use; (b) easily accessible from living or common areas; (c) of a useable in size and dimension; (d) of a suitable slope; (e) capable of receiving solar access.	**P3.4**	(1) No probable solution identified. **Note -** Refer to the relevant use code for specific private open space assessment criteria.

Assessable Development			
Specific Outcomes		**Probable Solutions**	
S3.5	(1) Areas set aside for public open space - (a) provide for recreational, aesthetic and environmental needs; (b) incorporate stormwater management needs, while not hindering the function of the open space.	**P3.5**	(1) No probable solution identified. **Note -** For additional assessment criteria for public open space refer - ■ Part 6 - Division 20 - Park Code; ■ Part 7 - Division 11 - Reconfiguration Code.
S3.6	(1) Uses and other development are designed in accordance with the principles of Crime Prevention through Environmental Design (CPTED) to assist in crime prevention by being - (a) orientated towards the street or parkland to provide opportunities for casual surveillance of public places; (b) designed and well lit to ensure casual surveillance opportunities, particularly for open space, car parking and pedestrian and cycle paths.	**P3.6**	(1) No probable solution identified. **Note -** To assist in achieving S3.6 refer to Planning Scheme Policy 16 - Safer By Design.
S3.7	(1) Artificial lighting does not result in unreasonable disturbance to any person or activity; (2) Glare and reflection from the sun are minimised through material and glazing choice.	**P3.7**	(1) The vertical illumination resulting from direct, reflected or other incidental light emanating from the site does not exceed 8 lux when measured at any point 1.5 metres outside the boundary at or above ground level; (2) No probable solution identified.
S3.8	(1) Noise generated by the use or other development is compatible with that experienced in a residential environment.	**P3.8**	(1) The use or other development does not generate noise, measured as the $L_{Amax,adj,T}$ parameter, at the boundary of the lot or premises, greater than - (a) 5dB(A) above the background noise level between 7am to 10pm; or (b) 3dB(A) above the background noise level between 10pm to 7am. **Note -** The $L_{Amax,adj,T}$ parameter is defined in the *Noise Measurement Manual* (Environmental Protection Agency, 2000).
S3.9	Air quality impacts are eliminated or mitigated to a level that is compatible with a residential environment by not emitting vibration, odour, fumes, smoke, vapour, steam, soot, ash, dust, grit, oil, radio or electrical	**P3.9**	No probable solution identified.

Assessable Development			
Specific Outcomes		**Probable Solutions**	
	interference beyond the premises.		
S3.10	(1) Traffic movements are compatible with that experienced in a residential environment.	**P3.10**	(1) Non-residential uses for commercial/ retail, community facilities and services, or similar are - (a) located on collector or higher order roads; (b) do not gain access from local roads. **Note -** Refer to Planning Scheme Policy 5 - Environmental Emissions for further information on air quality and noise impacts.
	Environment -		
S4.1	(1) Protect the environment from impacts associated with the use or other development including - (a) stormwater run-off; (b) water quality; (c) erosion and sediment run-off; (d) weed infestation.	**P4.1**	No probable solution identified.
S4.2	(1) Minimise the need for excavation and fill by uses and other development being located and designed to - (a) prevent the unnecessary removal of native plants; (b) protect natural overland drainage systems; (c) protect the amenity of adjoining properties; (d) reduce erosion and sediment run-off.	**P4.2**	(1) No probable solution identified. **Note -** Refer to Part 7 - Division 6 - Excavation and Fill Code for specific assessment criteria.
S4.3	(1) Uses and other development, including the provision of infrastructure, maximise the retention of native plants by - (a) where new public roads are required opportunities are taken to retain mature native plants within the road reserve; (b) in sub-area UR2 - the retention of native plants is maximised both within lots and road reserves; (2) Where the topography or environmental values of a site result in the creation of larger lots or the dedication of land the net density requirements of P2.4 are achieved.	**P4.3**	(1) In sub-area UR2 - (a) lots between 800m^2 to 1000m^2 maintain 10 percent of the lot with native plants where the lot is greater than 1000 m^2 retention is increased to 15 percent; (b) road alignment and design maximise retention of mature native trees, on either verges, speed control devices, such as round-a-bouts or build outs, or median areas; (c) building setback areas provide opportunities for native plant retention on all lots; (2) No probable solution identified.

Assessable Development			
Specific Outcomes		**Probable Solutions**	
S4.4	(1) Landscaping - (a) incorporates plant species that are native to the local area; (b) recognises and enhances the landscape character of the local area; (c) supports the retention and rehabilitation of enhancement areas and corridors; (d) maximises use of permeable surfaces and landscaping to reduce stormwater run-off; (e) incorporate landscaping as a component of the stormwater management system; (f) in sub-area UR2 - (i) filters views of the built environment; (ii) establishes a treed streetscape.	**P4.4**	(1) Species used for landscaping are selected from the native plant species listed in - (a) Schedule 9 - Street Trees where within the road reserve; (b) Schedule 10 - Vegetation Species List. **Note -** For additional assessment criteria, refer to Part 8 - ■ Division 8 - Landscape Code; ■ Division 9 - Stormwater Management Code.
	Infrastructure -		
S5.1	(1) Uses and other development are serviced by infrastructure including - (a) reticulated water; (b) reticulated sewerage; or (c) where the site not able to be connected to a reticulated sewerage system, wastewater is - (i) treated and disposed of on-site subject to site, soil and location constraints; (ii) reduces the potential for - a. contaminating groundwater, surface water or wetland environments; b. risks to reticulated water supply and public health; (d) stormwater drainage; (e) constructed road access; (f) energy; (g) telecommunications; (h) waste and recycling collection facilities.	**P5.1**	(1) No probable solution identified. **Note -** For additional assessment requirements refer to Part 8 - ■ Division 7 - Infrastructure Works Code; ■ Division 9 - Stormwater Management Code.
S5.2	In sub-area UR2 - infrastructure is provided in accordance with any infrastructure agreement applying to the area.	**P5.2**	No probable solution identified.
S5.3	Road alignment and design do not adversely impact upon the environmental values of the area.	**P5.3**	No probable solution identified.

Assessable Development			
Specific Outcomes		**Probable Solutions**	
S5.4	(1) Uses and other development - (a) maximise opportunities to incorporate public transport; (b) provide and upgrade pedestrian and cycle paths; (c) provide a high level of internal accessibility and good external connections for vehicles through the use of a grid pattern layout; (d) minimise use of culs-de-sac.	**P5.4**	(1) No probable solution identified. **Note -** Refer to - ■ Part 8 - Division 7 - Infrastructure Works Code for further information on provision, design and construction of infrastructure, roads and pedestrian and cycle paths; ■ Where creating new lots refer to Part 7 - Division 11 - Reconfiguration Code.
S5.5	(1) Waste and recycling is managed to minimise impacts on the environment by - (a) locating waste and recycling storage areas to protect amenity and to provide safe manual handling of containers; (b) screening waste and recycling container storage areas from view; (c) providing for the cleansing of containers in a manner that does not cause adverse environmental impacts.	**P5.5**	(1) No probable solution identified. **Note -** Refer to Part 11 - Planning Scheme Policy 9 - Infrastructure Works – Chapter 16 – Waste Management for further information on waste and recycling container volume, storage, servicing, screening and cleansing.
P5.6	Community infrastructure is able to function effectively during and immediately after flood events.	**P5.6**	Community infrastructure is located at or above the recommended flood levels in Table 2 - Recommended Flood Levels for Community Infrastructure.

Table 1 - Inconsistent Uses and Other Development

Inconsistent Uses
Aged Persons and Special Needs Housing - except where in sub-area UR1 and sub-area UR2
Agriculture
Airport
Apartment Building
Brothel
Bulky Goods Showroom
Car Wash Facility
Caretakers Dwelling
Cemetery
Child Care Centre - in sub-area UR3
Commercial Office - where having more than 400m^2 gross floor area
Display and Sale Activity
Drive Through Restaurant
Extractive Industry
Forestry
Funeral Parlour
General Industry
Heavy Industry
High Impact Industry
Hospital - in sub-area UR3
Hotel
Intensive Agriculture
Institution - in sub-area UR3
Landscape Supply Depot
Marine Services
Multiple Dwelling - except where in sub-area UR1 and sub-area UR2
Night Club
Outdoor Dining - where having more than 100m^2 gross floor area
Passenger Terminal
Place of Worship - in sub-area UR3
Produce Store
Refreshment Establishment - where having more than 200m^2 gross floor area
Retail Warehouse
Roadside Stall
Rural Enterprise
Service Industry
Service Station
Shop - where having more than 400m^2 gross floor area
Temporary Use
Vehicle Depot
Vehicle Parking Station - in sub-area UR3
Vehicle Repair Premises
Warehouse
Inconsistent Other Development
Creating lots by subdividing another lot by a Standard Format Plan (whether or not having a Community Management Statement) - in sub-area UR3
Creating Small Lots with a frontage of less than 10 metres, by subdividing another lot by a Standard Format Plan (whether or not having a Community Management Statement).

Table 2 - Recommended Flood Levels for Community Infrastructure

Type of Community Infrastructure	Recommended Flood Level AEP (ARI)
Emergency services, other than police facilities	0.2% (1 in 500 year ARI)
Emergency shelters	0.5% (1 in 200 year ARI)
Police facilities	0.5% (1 in 200 year ARI)
Hospitals and associated facilities	0.2% (1 in 500 year ARI)
Stores of valuable records or items of historic or cultural significance such as galleries and libraries	0.5% (1 in 200 year ARI)
Power stations	0.2% (1 in 500 year ARI)
Major switch yards	0.2% (1 in 500 year ARI)
Substations	0.5% (1 in 200 year ARI)
Sewerage treatment plants	1% (1 in 100 year ARI)
Water treatment plants	0.5% (1 in 200 year ARI)
■ State-controlled roads ■ Works of an electricity entity not otherwise listed in this table ■ Railway lines, stations and associated facilities ■ Aviation facilities ■ Communication network facilities	No specific recommended flood level but development proponents should ensure that the infrastructure is optimally located and designed to achieve suitable levels of service, having regard to the processes and policies of the administering government agency.

Reference - *State Planning Policy Guideline 1/03: Mitigating the Adverse Impacts of Flood, Bushfire and Landslide.*

Part 5 - Overlays

Note -

Summary of Overlays

Amenity Overlays

- Protection of the Poultry Industry
- Road and Rail Noise Impacts

Hazard Overlays

- Acid Sulfate Soils
- Bushfire Hazard
- Flood Prone, Storm Tide and Drainage Constrained Land
- Landslide Hazard

Resource Overlays

- Airspace and Aviation Facilities
- Electricity Infrastructure
- Extractive Resources
- Water Supply Catchments

Values Overlays

- Habitat Protection
- Heritage Place and Character Precinct
- Waterways, Wetlands and Moreton Bay

this page purposely
left blank

Division 1 - Acid Sulfate Soils Overlay

5.1.1 Introduction

(1) This division contains the provisions for the Acid Sulfate Soils Overlay. They are -

(a) The Acid Sulfate Soils Overlay Tables of Assessment, that incorporates -
- (i) Levels of assessment for development in the Acid Sulfate Soils Overlay (section 5.1.2);
- (ii) Assessment criteria for development in the Acid Sulfate Soils Overlay (section 5.1.3);
- (iii) Acid Sulfate Soils Overlay - Table of Assessment for Material Change of Use of Premises (section 5.1.4);
- (iv) Acid Sulfate Soils Overlay - Table of Assessment for Other Development not associated with a Material Change of Use of Premises (section 5.1.5).

(b) The Acid Sulfate Soils Overlay Code, that incorporates -
- (i) Compliance with the Acid Sulfate Soils Overlay Code (section 5.1.6);
- (ii) Overall Outcomes for the Acid Sulfate Soils Overlay Code (section 5.1.7);
- (iii) Acceptable Solutions applicable to Self-Assessable Development (section 5.1.8);
- (iv) Specific Outcomes and Probable Solutions applicable to Assessable Development (section 5.1.9).

5.1.2 Levels of assessment for development affected by the Acid Sulfate Soils Overlay

(1) Sections 5.1.4 and 5.1.5 identify the level of assessment for development affected by the Acid Sulfate Soils Overlay, as follows -

(a) section 5.1.4 Acid Sulfate Soils Overlay - Table of Assessment for Making a Material Change of Use of Premises -
- (i) column 1 identifies uses that are exempt, self-assessable or assessable;
- (ii) column 2 identifies the level of assessment for the uses listed in column 1;
- (iii) where the use is defined in Part 9 - Schedule 3 - Dictionary, Division 1 - Uses and is not listed in column 1 it is exempt;
- (iv) where the use is not defined in Part 9 - Schedule 3 - Dictionary, Division 1 - Uses and is not listed in column 1 it is code assessable.

(b) section 5.1.5 Acid Sulfate Soils Overlay - Table of Assessment for Other Development not associated with a Material Change of Use of Premises -
- (i) column 1 identifies other development that is exempt, self-assessable or assessable;
- (ii) column 2 identifies the level of assessment for other development listed in column 1;
- (iii) where the other development is not listed in column 1 it is exempt.

(2) Other overlays may alter the level of assessment identified in 1(a) and (b)[5.1].

[5.1] Refer to Part 5 - Overlays to determine the level of assessment for the use or other development where another overlay affects the lot and Part 1, section 1.2.5(10)(f) that explains how the highest level of assessment applies.

5.1.3 Assessment criteria for development in the Acid Sulfate Soils Overlay

(1) Development on a lot affected by the Acid Sulfate Soils Overlay is assessed against the assessment criteria listed in column 3 of sections 5.1.4 and 5.1.5, as follows -

(a) acceptable solutions in section 5.1.8 of the Acid Sulfate Soils Overlay Code for self-assessable development; or

(b) specific outcomes in section 5.1.9 of the Acid Sulfate Soils Overlay Code for assessable development.

(2) Self-assessable development that does not comply with all the acceptable solutions in section 5.1.8 of the Acid Sulfate Soils Overlay Code is assessable development.

5.1.4 Acid Sulfate Soils Overlay - Table of Assessment for Material Change of Use of Premises

Acid Sulfate Soils Overlay - Table of Assessment for Material Change of Use of Premises

column 1	column 2	column 3
Use[5.2]	**Level of Assessment**[5.3]	**Assessment Criteria**
■ Aged Persons and Special Needs Housing ■ Agriculture ■ Airport ■ Animal Keeping ■ Apartment Building ■ Brothel ■ Bulky Goods Showroom ■ Car Wash Facility ■ Cemetery ■ Child Care Centre ■ Commercial Office ■ Community Facility ■ Display and Sale Activity ■ Drive Through Restaurant ■ Dual Occupancy ■ Dwelling House ■ Education Facility ■ Emergency Services ■ Estate Sales Office ■ Extractive Industry ■ Forestry ■ Funeral Parlour ■ Garden Centre ■ General Industry ■ Health Care Centre ■ Heavy Industry ■ Hospital ■ Hotel ■ Indoor Recreation Facility ■ Institution ■ Intensive Agriculture ■ Landscape Supply Depot ■ Marine Services ■ Mobile Home Park ■ Multiple Dwelling ■ Night Club ■ Outdoor Dining ■ Outdoor Recreation Facility ■ Park ■ Passenger Terminal ■ Place of Worship ■ Produce Store ■ Refreshment Establishment ■ Relatives Apartment ■ Retail Warehouse ■ Roadside Stall ■ Rural Enterprise ■ Service Industry ■ Service Station ■ Shop ■ Small Lot House	Self-Assessable If complying with the assessment criteria being the acceptable solutions listed in column 3 Code Assessable If not self-assessable	■ Acceptable Solutions in section 5.1.8 of the Acid Sulfate Soils Overlay Code ■ Acid Sulfate Soils Overlay Code

[5.2] See Part 9 - Schedule 3 - Dictionary, Division 1 - Uses for defined uses.
[5.3] See Part 9 - Schedule 3 - Dictionary, Division 2 - Administrative Terms for a definition of level of assessment.

Acid Sulfate Soils Overlay - Table of Assessment for Material Change of Use of Premises

column 1	column 2	column 3
Use[5.2]	**Level of Assessment[5.3]**	**Assessment Criteria**
Continued - ■ Telecommunications Facility ■ Tourist Accommodation ■ Tourist Park ■ Utility Installation ■ Vehicle Depot ■ Vehicle Parking Station ■ Vehicle Repair Premises ■ Veterinary Surgery ■ Warehouse	Self-Assessable If complying with the assessment criteria being the acceptable solutions listed in column 3 Code Assessable If not self-assessable	■ Acceptable Solutions in section 5.1.8 of the Acid Sulfate Soils Overlay Code ■ Acid Sulfate Soils Overlay Code
Defined uses not listed in column 1	Exempt	
Uses not defined in Part 9 - Schedule 3 - Dictionary, Division 1 - Uses	Code Assessable	■ Acid Sulfate Soils Overlay Code

5.1.5 Acid Sulfate Soils Overlay - Table of Assessment for Other Development not associated with a Material Change of Use of Premises

Acid Sulfate Soils Overlay - Table of Assessment for Other Development

column 1	column 2	column 3
Other Development	**Level of Assessment[5.4]**	**Assessment Criteria**
Reconfiguration for -		
Creating lots by subdividing another lot by Standard Format Plan[5.5]	Code Assessable	■ Acid Sulfate Soils Overlay Code
Building Work for -		
■ Domestic Additions ■ Domestic Outbuilding ■ On-site raising or relocation of an existing dwelling unit ■ Private Tennis Court ■ Private Swimming Pool	Self-Assessable If complying with the assessment criteria being the acceptable solutions listed in column 3 Code Assessable If not self-assessable	■ Acceptable Solutions in section 5.1.8 of the Acid Sulfate Soils Overlay Code ■ Acid Sulfate Soils Overlay Code
Operational Work for -		
■ Excavation and Fill	Exempt If - (1) Disturbing less than 50m^3 of soil; (2) A height/depth not exceeding 300mm measured from ground level Self-Assessable If - (1) Not Exempt; (2) Complying with the assessment criteria being the acceptable solutions listed in column 3 Code Assessable If not self-assessable	■ Acceptable Solutions in section 5.1.8 of the Acid Sulfate Soils Overlay Code ■ Acid Sulfate Soils Overlay Code
■ Private Waterfront Structure	Self-Assessable If complying with the assessment criteria being the acceptable solutions listed in column 3 Code Assessable If not self-assessable	■ Acceptable Solutions in section 5.1.8 of the Acid Sulfate Soils Overlay Code ■ Acid Sulfate Soils Overlay Code

[5.4] See Part 9 - Schedule 3 - Dictionary, Division 2 - Administrative Terms for a definition of level of assessment.
[5.5] Whether or not having a Community Management Statement.

Acid Sulfate Soils Overlay - Table of Assessment for Other Development

column 1	column 2	column 3
Other Development	**Level of Assessment[5.4]**	**Assessment Criteria**
Operational Work for Reconfiguring a Lot (by Standard Format Plan)	Code Assessable	■ Acid Sulfate Soils Overlay Code
All other development not listed in column 1	Exempt	

5.1.6 Compliance with the Acid Sulfate Soils Overlay Code

(1) Development that is consistent with the following complies with the Acid Sulfate Soils Overlay Code -

(a) acceptable solutions in section 5.1.8 where self-assessable development; or

(b) specific outcomes in section 5.1.9 where assessable development.

Note -

For guidance on acid sulfate soil investigation and management refer to *State Planning Policy Guideline 2/02 Planning and Managing Development Involving Acid Sulfate Soils*, including Queensland ASS Sampling and ASS Technical Manuals.

5.1.7 Overall Outcomes of the Acid Sulfate Soils Overlay Code

(1) The overall outcomes are the purpose of the Acid Sulfate Soils Overlay Code.

(2) The overall outcomes sought for the Acid Sulfate Soils Overlay Code are the following -

(a) the presence and extent of acid sulfate soils (ASS) are identified and managed in conjunction with uses and other development;

(b) the natural and built environments, including infrastructure and human health, are protected from adverse effects associated with the release of acid and metal contaminants from ASS.

5.1.8 Acceptable Solutions applicable to Self-Assessable Development

Self-Assessable Development	
Acceptable Solutions	
A1.	(1) Filling or excavation on a lot or premises with a surface elevation that is equal to or below 5 metres Australian Height Datum (AHD) as shown on this overlay map only involves - (a) excavating or otherwise removing **less than** 100m^3 of soil or sediment; or (b) filling of land with **less than** 500m^3 of material, where the average depth of the material is **less than** 500mm; or (2) Filling or excavation on a lot or premises with a surface elevation that is between 5 and 20-metres AHD as shown on this overlay map only involves excavating or otherwise removing **less than** 100m^3 of soil or sediment from below the 5-metre AHD level. **Note -** Diagram 1 - Acid Sulfate Soil Affected Areas provides a diagrammatic representation of development that is self-assessable or assessable.

Diagram 1 - Acid Sulfate Soils Affected Areas

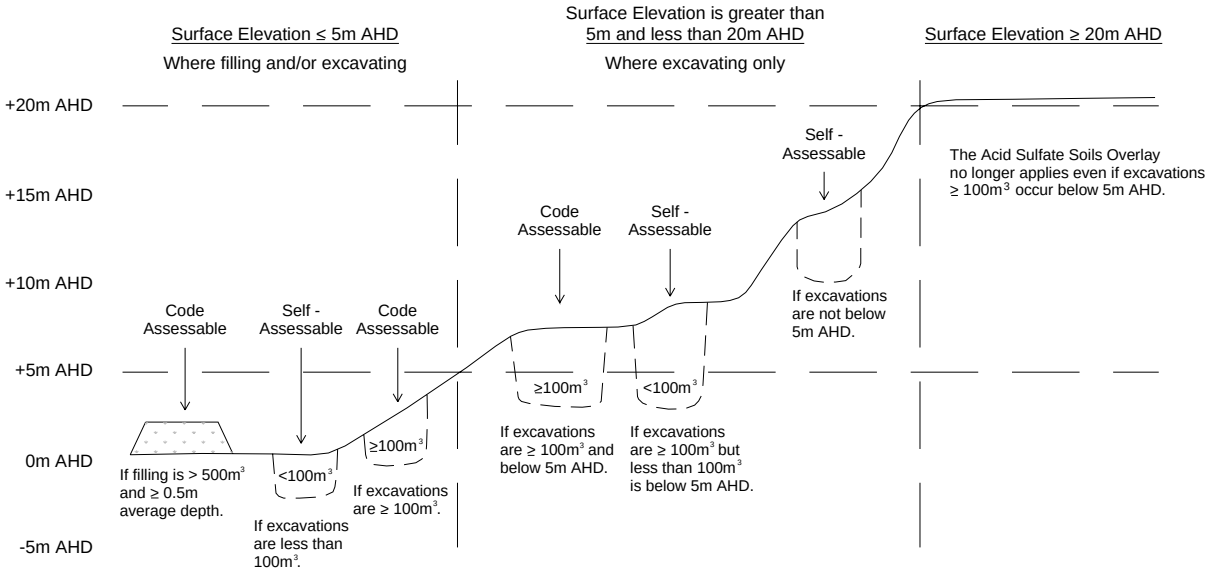

5.1.9 Specific Outcomes and Probable Solutions applicable to Assessable Development

Assessable Development			
Specific Outcomes		**Probable Solutions**	
S1.	ASS Identification - (1) Filling or excavation on a lot or premises with a surface elevation that is equal to or below 5 metres Australian Height Datum (AHD) as shown on this overlay map only involves - (a) excavating or otherwise removing **less than** 100m^3 of soil or sediment; or (b) filling of land with **less than** 500m^3 of material, where the average depth of the material is **less than** 500mm; or (2) Filling or excavation on a lot or premises with a surface elevation that is between 5 and 20 metres AHD as shown on this overlay map only involves excavating or otherwise removing **less than** 100m^3 of soil or sediment from below the 5 metres AHD level; or **Note -** Compliance with S1.(1) or (2) achieves compliance with this Code. (3) Confirm the presence or otherwise of ASS; (4) Where the presence of ASS is confirmed, identify the location, depth and maximum actual and potential acidity of ASS likely to result from disturbance.	**P1.**	(1) No probable solution identified; or (2) No probable solution identified; or (3) No probable solution identified; (4) No probable solution identified. **Note -** Where there is the likelihood of the presence or otherwise of ASS prepare and submit an Acid Sulfate Soil Investigation Report.
S2.1	ASS Management - (1) Uses and other development do not - (a) excavate or otherwise remove soil or sediment identified as containing ASS; (b) permanently or temporarily extract groundwater that results in the aeration of previously saturated ASS; (c) undertake filling that results in - (i) actual ASS being moved below the water-table; (ii) previously saturated ASS being aerated.	**P2.1**	(1) No probable solution identified. **Note -** Where the presence of ASS is confirmed, prepare and submit an Acid Sulfate Soil Management Report.

Assessable Development			
Specific Outcomes		**Probable Solutions**	
S2.2	(1) Uses and other development are undertaken in a manner that ensures - (a) existing acidity is neutralised; (b) no generation of acid and metal contaminants; (c) no release of surface or groundwater flows containing acid and metal contaminants into the environment.	**P2.2**	(1) No probable solution identified.

Division 2 - Airspace and Aviation Facilities Overlay

5.2.1 Introduction

(1) This division contains the provisions for the Airspace and Aviation Facilities Overlay. They are -

(a) The Airspace and Aviation Facilities Overlay Tables of Assessment, that incorporates -
- (i) Levels of assessment for development in the Airspace and Aviation Facilities Overlay (section 5.2.2);
- (ii) Assessment criteria for development in the Airspace and Aviation Facilities Overlay (section 5.2.3);
- (iii) Airspace and Aviation Facilities Overlay - Table of Assessment for Material Change of Use of Premises (section 5.2.4);
- (iv) Airspace and Aviation Facilities Overlay - Table of Assessment for Other Development not associated with a Material Change of Use of Premises (section 5.2.5).

(b) The Airspace and Aviation Facilities Overlay Code, that incorporates -
- (i) Compliance with the Airspace and Aviation Facilities Overlay Code (section 5.2.6);
- (ii) Overall Outcomes for the Airspace and Aviation Facilities Overlay Code (section 5.2.7);
- (iii) Acceptable Solutions applicable to Self-Assessable Development (section 5.2.8);
- (iv) Specific Outcomes and Probable Solutions applicable to Assessable Development (section 5.2.9).

5.2.2 Levels of assessment for development affected by the Airspace and Aviation Facilities Overlay

(1) Sections 5.2.4 and 5.2.5 identify the level of assessment for development affected by the Airspace and Aviation Facilities Overlay, as follows -

(a) section 5.2.4 Airspace and Aviation Facilities Overlay - Table of Assessment for Making a Material Change of Use of Premises -
- (i) column 1 identifies uses that are exempt, self-assessable or assessable;
- (ii) column 2 identifies the level of assessment for the uses listed in column 1;
- (iii) where the use is defined in Part 9 - Schedule 3 - Dictionary, Division 1 - Uses and is not listed in column 1 it is exempt;
- (iv) where the use is not defined in Part 9 - Schedule 3 - Dictionary, Division 1 - Uses and is not listed in column 1 it is code assessable.

(b) section 5.2.5 Airspace and Aviation Facilities Overlay - Table of Assessment for Other Development not associated with a Material Change of Use of Premises -
- (i) column 1 identifies other development that is exempt, self-assessable or assessable;
- (ii) column 2 identifies the level of assessment for other development listed in column 1;
- (iii) where the other development is not listed in column 1 it is exempt.

(2) Other Overlays may alter the level of assessment identified in 1(a) and (b)[5.6].

[5.6] Refer to Part 5 - Overlays to determine the level of assessment for the use or other development where another Overlay affects the lot and Part 1, section 1.2.5(10)(f) that explains how the highest level of assessment applies.

5.2.3 Assessment criteria for development in the Airspace and Aviation Facilities Overlay

(1) Development affected by the Airspace and Aviation Facilities Overlay is assessed against the assessment criteria listed in column 3 of sections 5.2.4 and 5.2.5, as follows -

(a) acceptable solutions in section 5.2.8 of the Airspace and Aviation Facilities Overlay Code for self-assessable development; or

(b) specific outcomes in section 5.2.9 of the Airspace and Aviation Facilities Overlay Code for assessable development.

(2) Self-assessable development that does not comply with all the acceptable solutions in section 5.2.8 of the Airspace and Aviation Facilities Overlay Code is assessable development.

5.2.4 Airspace and Aviation Facilities Overlay - Table of Assessment for Material Change of Use of Premises

Airspace and Aviation Facilities Overlay - Table of Assessment for Material Change of Use

column 1	column 2	column 3
Use[5.7]	**Level of Assessment**[5.8]	**Assessment Criteria**
■ Agriculture ■ Airport ■ Apartment Building ■ Bulky Goods Showroom ■ Cemetery ■ Commercial Office ■ Community Facility ■ Education Facility ■ Emergency Services ■ Extractive Industry ■ Forestry ■ General Industry ■ Health Care Centre ■ Heavy Industry ■ Hospital ■ Indoor Recreation Facility ■ Institution ■ Intensive Agriculture ■ Outdoor Recreation Facility ■ Park ■ Refreshment Establishment ■ Retail Warehouse ■ Rural Enterprise ■ Service Industry ■ Service Station ■ Shop ■ Telecommunications Facility ■ Temporary Use ■ Tourist Accommodation ■ Utility Installation ■ Vehicle Depot ■ Vehicle Repair Premises ■ Warehouse	Self-Assessable If complying with the assessment criteria being the acceptable solutions listed in column 3 Code Assessable If not self-assessable	■ Acceptable Solutions in section 5.2.8 of the Airspace and Aviation Facilities Overlay Code ■ Airspace and Aviation Facilities Overlay Code
Defined uses not listed in column 1	Exempt	
Uses not defined in Part 9 - Schedule 3 - Dictionary, Division 1 - Uses	Code Assessable	■ Airspace and Aviation Facilities Overlay Code

[5.7] See Part 9 - Schedule 3 - Dictionary, Division 1 - Uses for defined uses.
[5.8] See Part 9 - Schedule 3 - Dictionary, Division 2 - Administrative Terms for a definition of level of assessment.

5.2.5 Airspace and Aviation Facilities Overlay - Table of Assessment for Other Development not associated with a Material Change of Use of Premises

Airspace and Aviation Facilities Overlay - Table of Assessment for Other Development

column 1	column 2	column 3
Other Development	**Level of Assessment**[5.9]	**Assessment Criteria**
Building Work for -		
Communications Structures	Self-Assessable If complying with the assessment criteria being the acceptable solutions listed in column 3 Code Assessable If not self-assessable	■ Acceptable Solutions in section 5.2.8 of the Airspace and Aviation Facilities Overlay Code ■ Airspace and Aviation Facilities Overlay Code
Operational Work for -		
■ Excavation and Fill	Exempt If - (1) Disturbing less than 50m^3 of soil; (2) A height/depth not exceeding 300mm measured from ground level Self-Assessable If - (1) Not Exempt; (2) Complying with the assessment criteria being the acceptable solutions listed in column 3 Code Assessable If not self-assessable	■ Acceptable Solutions in section 5.2.8 of the Airspace and Aviation Facilities Overlay Code ■ Airspace and Aviation Facilities Overlay Code
■ Operational Work for Reconfiguring a Lot (by Standard Format Plan)	Self-Assessable If complying with the assessment criteria being the acceptable solutions listed in column 3 Code Assessable If not self-assessable	■ Acceptable Solutions in section 5.2.8 of the Airspace and Aviation Facilities Overlay Code ■ Airspace and Aviation Facilities Overlay Code
All other development not listed in column 1	Exempt	

[5.9] See Part 9 - Schedule 3 - Dictionary, Division 2 - Administrative Terms for a definition of level of assessment.

5.2.6 Compliance with the Airspace and Aviation Facilities Overlay Code

(1) Development that consistent with the following complies with the Airspace and Aviation Facilities Overlay Code -

(a) acceptable solutions in section 5.2.8 where self-assessable development; or

(b) specific outcomes in section 5.2.9 where assessable development.

Note -

For guidance on development in the vicinity of airports and aviation facilities refer to *State Planning Policy 1/02 Guideline - Development in the Vicinity of Certain Airports and Aviation Facilities*.

5.2.7 Overall Outcomes of the Airspace and Aviation Facilities Overlay Code

(1) The overall outcomes are the purpose of the Airspace and Aviation Facilities Overlay Code.

(2) The overall outcomes sought for the Airspace and Aviation Facilities Overlay Code are the following -

(a) to minimise adverse effects on the safety and operational efficiency of operational airspace;

(b) to reduce negative impacts on the functioning of aviation facilities, through site planning and development management.

5.2.8 Acceptable Solutions applicable to Self-Assessable Development

Self-Assessable Development	
Acceptable Solutions	
A1.	(1) Uses and other development where in Operational Airspace A as shown on this overlay map - (a) do not involve the disposal of putrescible waste; (b) are not higher than 152.5 metres Australian Height Datum (AHD); (c) do no involve temporary or permanent aviation activities; (d) do not emit dust, smoke, steam, gaseous plumes or ash beyond 152.5 metres AHD; or (2) Uses and other development where in Operational Airspace B as shown on this overlay map - (a) are not higher than 152.5 metres AHD; (b) do no involve temporary or permanent aviation activities; (c) do not emit dust, smoke, steam, gaseous plumes or ash beyond 152.5 metres AHD; or **Notes -** ■ Aviation activities may include uses such as parachuting, hangliding or hot air ballooning; ■ Refer to Diagram 1 - Areas affected by Operational Airspace. (3) Uses and other development within the Mount Hardgrave Surveillance Radar Sensitive Area as shown on this overlay map are - (a) not higher than 219 metres AHD within the 500 metre buffer zone; or (b) not higher than 223 metres AHD within the 1000 metre buffer zone; or (c) not higher than 227 metres AHD within the 2000 metre buffer zone; or (d) not higher than 236 metres AHD within the 3000 metre buffer zone; or (e) not higher than 245 metres AHD within the 4000 metre buffer zone; or **Note -** Refer to Diagram 2 - Areas affected by Mount Hardgrave Surveillance Radar Sensitive Area. (4) Uses and other development within the Birkdale Satellite and Link Communications Site Sensitive Area as shown on this overlay map are - (a) not higher than 20 metres AHD; (b) not within the 120 metre x 100 metre infrastructure containment buffer zone surrounding the Satellite and Link Communication Site at Birkdale. **Note -** Refer to Diagram 3 - Area affected by Birkdale Satellite and Link Communications Site Sensitive Area.

5.2.9 Specific Outcomes and Probable Solutions applicable to Assessable Development

Assessable Development			
Specific Outcomes		**Probable Solutions**	
	Where proposed on any part of a lot or premises shown as Operational Airspace on this overlay map -		
S1.1	(1) Permanent or temporary obstructions do not adversely impact on operational airspace. **Notes -** ■ Operational airspace concerning the planning scheme area is higher than 152.5 metres AHD and is within Operational Airspace A and B as shown on this overlay map; ■ Refer to Diagram 1 - Areas affected by Operational Airspace.	**P1.1**	(1) Where in Operational Airspace A or B, as shown on this overlay map - (a) buildings, structures, ancillary rooftop objects being satellite dishes and antennae, cranes or trees are not higher than 152.5 metres AHD; (b) uses involving permanent or temporary aviation activities are not undertaken. **Note -** Aviation activities may include uses such as parachuting, hangliding or hot air ballooning.
S1.2	(1) Emissions from uses and other development do not adversely impact on air turbulence, aircraft engine operation or visibility in operational airspace.	**P1.2**	(1) Uses - (a) that involve the discharge of gaseous plumes beyond 152.5 metres AHD limit velocity to less than 4.3 metres per second where in Operational Airspace A or B as shown on this overlay map; (b) and other development with the potential to produce dust, smoke, steam or ash that will extend beyond 152.5 metres AHD are not located within Operational Airspace A or B as shown on this overlay map. **Note -** High velocity emissions may be allowable if mechanisms are used to prevent the plume from affecting operational airspace.
S1.3	Wildlife, particularly birds and bats, are not attracted into operational airspace in substantial numbers that may increase the risk of strike.	**P1.3**	Uses and other development involving the disposal of putrescible waste are not located within Operational Airspace A as shown on this overlay map. **Note -** If exceptional circumstances justify approving a putrescible waste disposal facility within Operational Airspace A, then effective measures to reduce wildlife attraction are required.

Assessable Development			
Specific Outcomes		**Probable Solutions**	
S2.	Where proposed on any part of a lot or premises shown as within the Mount Hardgrave Surveillance Radar Sensitive Area on this overlay map - (1) Temporary or permanent obstructions do not intrude into sensitive areas surrounding aviation facilities. **Note -** Refer to Diagram 2 - Areas affected by Mount Hardgrave Surveillance Radar Sensitive Area.	**P2.**	(1) Uses and other development within the Mount Hardgrave Surveillance Radar Sensitive Area as shown on this overlay map are - (a) not higher than 219 metres AHD within the 500 metre buffer zone; or (b) not higher than 223 metres AHD within the 1000 metre buffer zone; or (c) not higher than 227 metres AHD within the 2000 metre buffer zone; or (d) not higher than 236 metres AHD within the 3000 metre buffer zone; or (e) not higher than 245 metres AHD within the 4000 metre buffer zone.
S3.	Where proposed on any part of a lot or premises shown as within the Birkdale Satellite and Link Communication Site Sensitive Area on this overlay map - Temporary or permanent obstructions do not intrude into sensitive areas surrounding aviation facilities. **Note -** Refer to Diagram 3 - Area affected by Birkdale Satellite and Link Communications Site Sensitive Area	**P3.**	Uses and other development within the Birkdale Satellite and Link Communication Site Sensitive Area as shown on this overlay map are not higher than 20 metres AHD.
S4.	Where proposed on any part of a lot or premises shown as within the Birkdale Satellite and Link Communication Site Infrastructure Containment Buffer Zone on this overlay map - Uses and other development are not located within the 120 metre x 100 metre infrastructure containment buffer zone surrounding the Birkdale Satellite and Link Communication Site.	**P4.**	No probable solution identified.

Diagram 1 - Areas affected by Operational Airspace

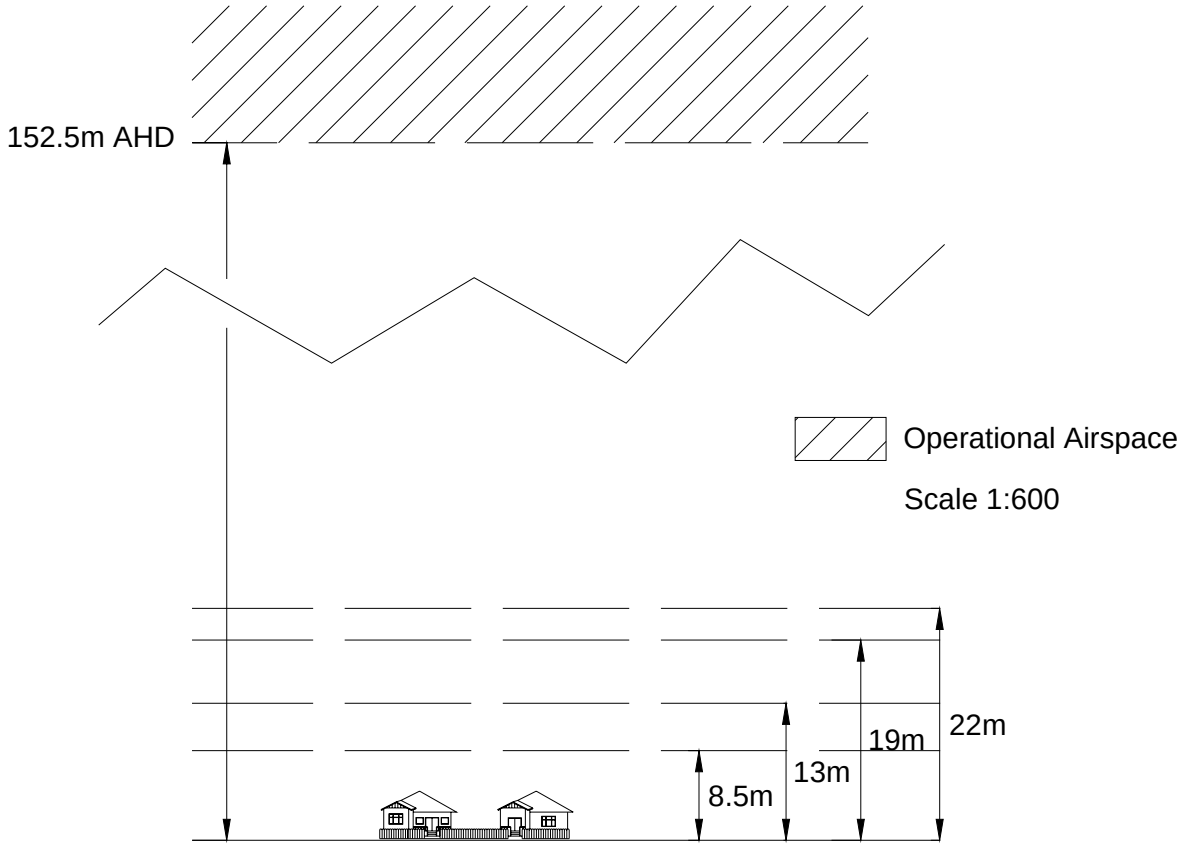

Diagram 2 - Areas affected by Mount Hardgrave Surveillance Radar Sensitive Area

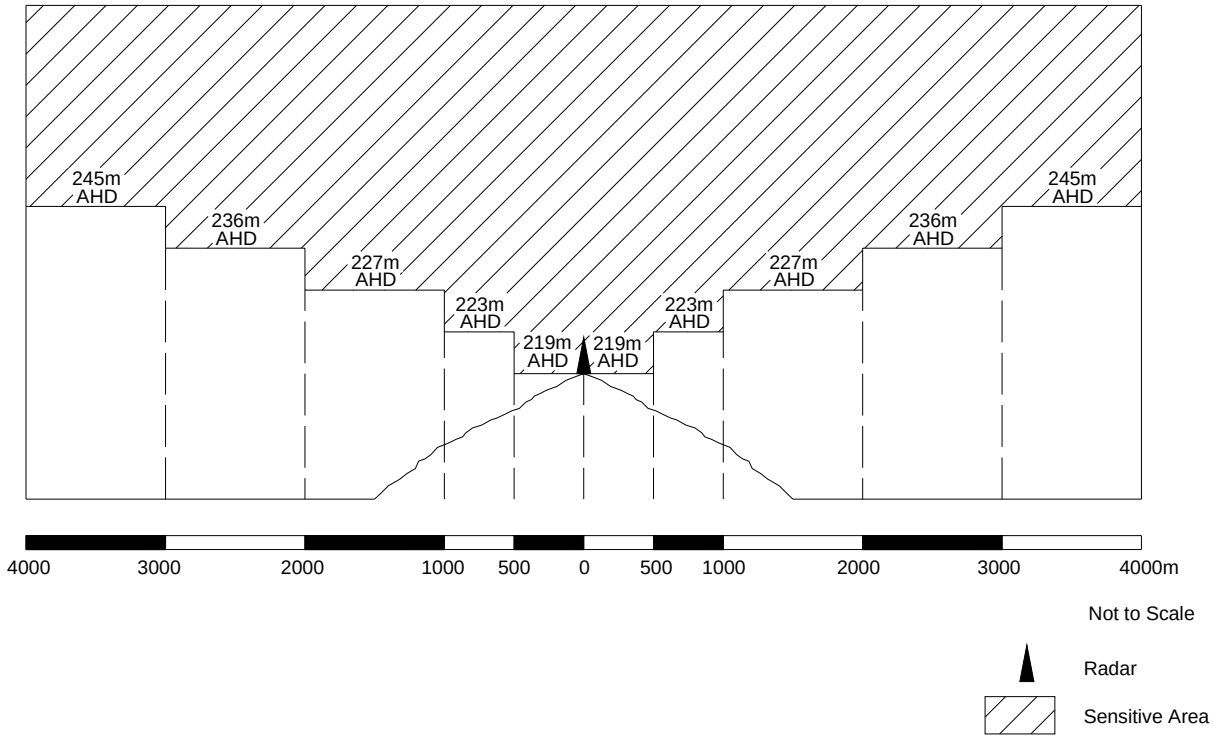

Diagram 3 - Area affected by Birkdale Satellite and Link Communications Site Sensitive Area

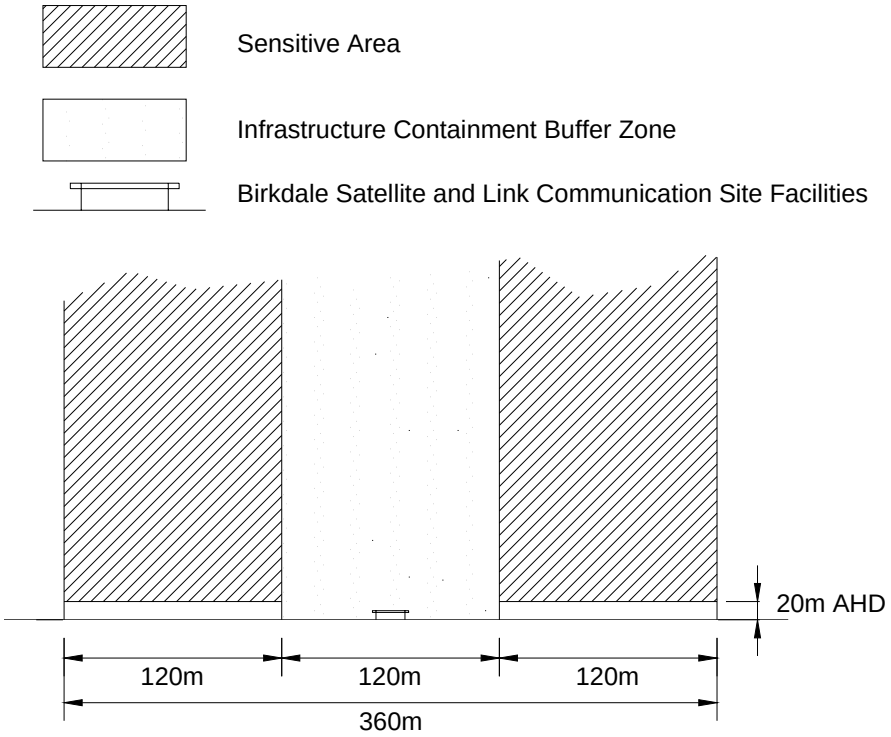

Southern Elevation
Scale 1:2000

Division 3 - Bushfire Hazard Overlay

5.3.1 Introduction

(1) This division contains the provisions for the Bushfire Hazard Overlay. They are -

(a) The Bushfire Hazard Overlay Tables of Assessment, that incorporates -
- (i) Levels of assessment for development in the Bushfire Hazard Overlay (section 5.3.2);
- (ii) Assessment criteria for development in the Bushfire Hazard Overlay (section 5.3.3);
- (iii) Bushfire Hazard Overlay - Table of Assessment for Material Change of Use of Premises (section 5.3.4);
- (iv) Bushfire Hazard Overlay - Table of Assessment for Other Development not associated with a Material Change of Use of Premises (section 5.3.5).

(b) The Bushfire Hazard Overlay Code, that incorporates -
- (i) Compliance with the Bushfire Hazard Overlay Code (section 5.3.6);
- (ii) Overall Outcomes for the Bushfire Hazard Overlay Code (section 5.3.7);
- (iii) Acceptable Solutions applicable to Self-Assessable Development (section 5.3.8);
- (iv) Specific Outcomes and Probable Solutions applicable to Assessable Development (section 5.3.9).

5.3.2 Levels of assessment for development affected by the Bushfire Hazard Overlay

(1) Sections 5.3.4 and 5.3.5 identify the level of assessment for development affected by the Bushfire Hazard Overlay, as follows -

(a) Section 5.3.4 Bushfire Hazard Overlay - Table of Assessment for Making a Material Change of Use of Premises -
- (i) column 1 identifies uses that are exempt, self-assessable or assessable;
- (ii) column 2 identifies the level of assessment for the uses listed in column 1;
- (iii) where the use is defined in Schedule 3 - Dictionary, Division 1 - Uses and is not listed in column 1 it is exempt;
- (iv) where the use is not defined in Schedule 3 - Dictionary, Division 1 - Uses and is not listed in column 1 it is code assessable.

(b) Section 5.3.5 Bushfire Hazard Overlay - Table of Assessment for Other Development not associated with a Material Change of Use of Premises -
- (i) column 1 identifies other development that is exempt, self-assessable or assessable;
- (ii) column 2 identifies the level of assessment for other development listed in column 1;
- (iii) where the other development is not listed in column 1 it is exempt.

(2) Other Overlays may alter the level of assessment identified in 1(a) and (b)[5.10].

Note -

Land identified within the High Bushfire Hazard and Southern Moreton Bay Islands Bushfire Hazard is designated as a bushfire prone area and the medium category bushfire protection provisions of the *Building Code of Australia* apply for the purposes of section 55 of the *Standard Building Regulations 1993.*

If the use or other development is on a premises that has been created through a reconfiguration approval, since the current RPS version update, the matters for consideration against the Code are deemed to have been addressed. This applies to uses and other development that are listed as self-assessable in the applicable zone code.

[5.10] Refer to Part 5 - Overlays to determine the level of assessment for the use or other development where another Overlay affects the lot and Part 1, section 1.2.5(10)(f) that explains how the highest level of assessment applies.

5.3.3 Assessment criteria for development in the Bushfire Hazard Overlay

(1) Development affected by the Bushfire Hazard Overlay is assessed against the assessment criteria listed in column 3 of sections 5.3.4 and 5.3.5, as follows -

(a) acceptable solutions in section 5.3.8 of the Bushfire Hazard Overlay Code for self-assessable development; or

(b) specific outcomes in section 5.3.9 of the Bushfire Hazard Overlay Code for assessable development.

(2) Self-assessable development that does not comply with all the acceptable solutions in section 5.3.8 of the Bushfire Hazard Overlay Code is assessable development.

5.3.4 Bushfire Hazard Overlay - Table of Assessment for Material Change of Use of Premises

Bushfire Hazard Overlay - Table of Assessment for Material Change of Use of Premises

column 1	column 2	column 3
Use[5.11]	**Level of Assessment**[5.12]	**Assessment Criteria**
■ Aged Persons and Special Needs Housing ■ Agriculture ■ Airport ■ Animal Keeping ■ Apartment Building ■ Bed and Breakfast ■ Brothel ■ Bulky Goods Showroom ■ Car Wash Facility ■ Caretakers Dwelling ■ Child Care Centre ■ Commercial Office ■ Community Facility ■ Display and Sale Activity ■ Drive Through Restaurant ■ Dual Occupancy ■ Dwelling House ■ Education Facility ■ Emergency Services ■ Estate Sales Office ■ Extractive Industry ■ Forestry ■ Funeral Parlour ■ Garden Centre ■ General Industry ■ Health Care Centre ■ Heavy Industry ■ Home Business ■ Hospital ■ Hotel ■ Indoor Recreation Facility ■ Institution ■ Intensive Agriculture ■ Landscape Supply Depot ■ Marine Services ■ Minor Utility ■ Mobile Home Park ■ Multiple Dwelling ■ Night Club ■ Outdoor Dining ■ Outdoor Recreation Facility ■ Passenger Terminal ■ Place of Worship	Self-Assessable If complying with the assessment criteria being the acceptable solutions listed in column 3 Code Assessable If not self-assessable	■ Acceptable Solutions in section 5.3.8 of the Bushfire Hazard Overlay Code ■ Bushfire Hazard Overlay Code

[5.11] See Schedule 3 - Dictionary, Division 1 - Uses for defined uses.
[5.12] See Schedule 3 - Dictionary, Division 2 - Administrative Terms for a definition of level of assessment.

Bushfire Hazard Overlay - Table of Assessment for Material Change of Use of Premises

column 1	column 2	column 3
Use[5.11]	**Level of Assessment[5.12]**	**Assessment Criteria**
Continued - ■ Produce Store ■ Refreshment Establishment ■ Relatives Apartment ■ Retail Warehouse ■ Roadside Stall ■ Rural Enterprise ■ Service Industry ■ Service Station ■ Shop ■ Small Lot House ■ Telecommunications Facility ■ Temporary Use ■ Tourist Accommodation ■ Tourist Park ■ Utility Installation ■ Vehicle Depot ■ Vehicle Parking Station ■ Vehicle Repair Premises ■ Veterinary Surgery ■ Warehouse	Self-Assessable If complying with the assessment criteria being the acceptable solutions listed in column 3 Code Assessable If not self-assessable	■ Acceptable Solutions in section 5.3.8 of the Bushfire Hazard Overlay Code ■ Bushfire Hazard Overlay Code
Defined uses not listed in column 1	Exempt	
Uses not defined in Part 9 - Schedule 3 - Dictionary, Division 1 - Uses	Code Assessable	■ Bushfire Hazard Overlay Code

5.3.5 Bushfire Hazard Overlay - Table of Assessment for Other Development not associated with a Material Change of Use of Premises

Bushfire Hazard Overlay - Table of Assessment for Other Development

column 1	column 2	column 3
Other Development	**Level of Assessment**[5.13]	**Assessment Criteria**
Reconfiguration for -		
Creating lots by subdividing another lot by Standard Format Plan[5.14]	Code Assessable	■ Bushfire Hazard Overlay Code
Rearranging the boundaries of a lot by registering a plan of subdivision	Code Assessable	■ Bushfire Hazard Overlay Code
Building Work for -		
■ Domestic Additions ■ Domestic Outbuilding ■ On-site raising or relocation of an existing dwelling unit	Self-Assessable If complying with the assessment criteria being the acceptable solutions listed in column 3 Code Assessable If not self-assessable	■ Acceptable Solutions in section 5.3.8 of the Bushfire Hazard Overlay Code ■ Bushfire Hazard Overlay Code
Operational Work for -		
Operational Work for Reconfiguring a Lot (by Standard Format Plan)	Code Assessable	■ Bushfire Hazard Overlay Code
All other development not listed in column 1	Exempt	

[5.13] See Schedule 3 - Dictionary, Division 2 - Administrative Terms for a definition of level of assessment.
[5.14] Whether or not having a Community Management Statement.

5.3.6 Compliance with the Bushfire Hazard Overlay Code

(1) Development that is consistent with the following complies with the Bushfire Hazard Overlay Code -

(a) acceptable solutions in section 5.3.8 where self-assessable development; or

(b) specific outcomes in section 5.3.9 where assessable development.

Note -

- Planning Scheme Policy 1 - Bushfire Hazard will assist in achieving the requirements of the Bushfire Hazard Overlay Code.
- Land identified within the high bushfire hazard and Southern Moreton Bay Islands bushfire hazard is designated as a bushfire prone area and the medium category bushfire protection provisions of the *Building Code of Australia* apply for the purposes of section 55 of the *Standard Building Regulations 1993.*

5.3.7 Overall Outcomes of the Bushfire Hazard Overlay Code

(1) The overall outcomes are the purpose of the Bushfire Hazard Overlay Code.

(2) The overall outcomes sought for the Bushfire Hazard Code are the following -

(a) to minimise the density of uses and other development at risk from bushfire hazard so as to reduce the number of people and properties subject to that risk;

(b) to ensure uses and other development are sited, designed and managed to minimise the risk of bushfire to people and property.

5.3.8 Acceptable Solutions applicable to Self-Assessable Development

Self-Assessable Development	
Acceptable Solutions	
A1.	(1) Where on the mainland and on a lot or premises identified as medium or high bushfire hazard on this overlay map, uses and other development are located outside the area shown on the overlay map; or (2) Uses and other development are located within an approved development envelope.

5.3.9 Specific Outcomes and Probable Solutions applicable to Assessable Development

Assessable Development			
Specific Outcomes		**Probable Solutions**	
	General -		
S1.	(1) Where on the mainland and on a lot or premises identified as medium or high bushfire hazard on this overlay map, uses and other development are located outside the area shown on the overlay map; or **Note -** Compliance with specific outcome S1.(1) achieves compliance with this Code. (2) Uses and other development maintain the safety of people and property by - (a) avoiding areas shown on this overlay map as - (i) high bushfire hazard; or (ii) medium bushfire hazard; or (iii) Southern Moreton Bay Islands (SMBI) bushfire hazard;	**P1.**	(1) No probable solution identified. (2) Uses and other development - (a) locate on land that is not shown on this overlay map as - (i) high bushfire hazard; or (ii) medium bushfire hazard; or (iii) Southern Moreton Bay Islands (SMBI) bushfire hazard; or (b) where shown as medium and SMBI bushfire hazard on this overlay map - (i) determine that the hazard on that part of the lot or premises where the development is proposed is low through a bushfire hazard assessment; or (ii) comply with the recommendations of a bushfire management plan previously prepared for the specific premises; or (c) where shown as high bushfire hazard on this overlay map, all uses and other development, excluding dwelling houses on existing lots, comply with the

Assessable Development			
	Specific Outcomes		**Probable Solutions**
			recommendations of a comprehensive bushfire management plan for the premises; **Note -** To assist in achieving P1.(2)(b) and (c) refer to Part 11 - Planning Scheme Policy 1 - Bushfire Hazard for requirements of a bushfire hazard assessment or bushfire management plan.
	(3) Buildings and structures mitigate risk from bushfire hazard through siting, setback and design;		(3) Buildings and structures - (a) on a lot or premises greater than 2500m^2 - (i) are located on that part of the lot or premises with the lowest bushfire hazard; (ii) where shown in medium or high bushfire hazard areas on this overlay map, are provided with a fuel reduction area that is a minimum of 1.5 times the predominant mature canopy height; or (iii) where shown in SMBI bushfire hazard areas on this overlay map, provide a fuel reduction area that complies with Table 1 - Type 2; or (b) on a lot or premises less than 2500m^2 - (i) maximise setbacks from the bushfire hazard; or (ii) where shown as SMBI bushfire hazard on this overlay map - a. provide a fuel reduction area that complies with Table 1 - Type 2; or b. provide a fuel reduction area that complies with Table 1 - Type 4 and buildings are constructed in accordance with *Australian Standard 3959:1999 - Construction of Buildings in a Bushfire Prone Area*;
	(4) Reconfiguration and uses that involve numerous buildings, such as tourist accommodation, aged person and special needs housing		(4) Reconfiguration that creates lots or uses that will involve numerous buildings - (a) where shown as high bushfire

Assessable Development			
Specific Outcomes		**Probable Solutions**	
	or the like, mitigate risk from bushfire hazard through lot design and roads and firebreaks that provide adequate access for fire fighting and other emergency vehicles and safe evacuation routes;		hazard on this overlay, comply with a bushfire management plan for the premises; or (b) where shown as medium or SMBI bushfire hazard, identify an area, in the form of development envelope, that is of sufficient size to - (i) comply with setbacks detailed in P1.(3)(a) and (b) depending on the hazard that is shown on the lot or premises where the development envelope is proposed; (ii) contain all expected uses and associated activities, including buildings, structures, open space, infrastructure and access; (c) provides efficient emergency access for fire fighting purposes by - (i) limiting long narrow lots and accessways; (ii) providing an alternative evacuation route by - a. through roads; or b. where culs-de-sac are used, alternative vehicle access connects the culs-de-sac to the through roads; (iii) providing a perimeter road to separate the development from the hazard that is designed - a. with a minimum cleared width of 20 metres, b. a maximum gradient of 12.5 percent; c. a maximum crossfall of 7 percent; or (iv) where the provision of a perimeter road is not achievable, fire trails are located within the site and comply with the following - a. separate development from the hazard; b. where in the SMBI bushfire hazard have a minimum cleared width of 3 metres that is supported by a slashed zone that complies with Table 1, Type 2 either side of the trail; or

Assessable Development			
	Specific Outcomes		**Probable Solutions**
			c. where in the medium bushfire hazard have a minimum cleared width of 6 metres that is supported by a 10 metre slashed zone either side of the trail; d. where in the high bushfire hazard have a minimum cleared width of 6 metres that is supported by a 15 metre slashed zone either side of the trail; e. have a maximum gradient of 12.5 percent, f. have a maximum crossfall of 7 percent; g. are a constructed finish of 50mm deep decomposed granite; h. have vehicle access at each end; i. include passing bays and turning areas for fire fighting trucks; j. are ultimately dedicated to the local government or provided with an access easement in favour of the local government and Queensland Fire and Rescue Service; **Note -** Fire trails will only be accepted if it is not practicable to provide the firebreak in the form of a perimeter road due to - ■ topographical or remnant or significant vegetation constraints; or ■ access to the proposed lots being provided from an existing road and it would be unreasonable to require the construction of a new road.
	(5) Uses and other development mitigate risk from bushfire hazard through providing an adequate and accessible water supply for fire fighting purposes.		(5) Uses involving proposed or existing buildings with a gross floor area greater than 50m^2 are provided with a reliable on-site water supply by - (a) being connected to a reticulated water supply with a minimum pressure and flow of 10 litres per second at 200kPa; or

Assessable Development			
Specific Outcomes		**Probable Solutions**	
			(b) provision of a storage system that is capable of holding a minimum of 5000 litres in the form of a - (i) dam; (ii) swimming pool; or (iii) tank storage system; (c) where a storage system is used it is - (i) fireproof; (ii) fitted with necessary fire hose connections; (iii) accessible for fire fighting vehicles; (iv) provided with a hard stand area within 6 metres of the water supply; (v) connected to a pump that is independent of mains electricity supply; (vi) capable of retaining 5000 litres solely for fire fighting purposes. **Notes -** ■ Where the use incorporates roof sprinkler systems it is advised that the water supply be increased to 22,000 litres. ■ Communal bushfire water supply is encouraged and will be determined on an individual development basis.
S2.	Environmental Values - (1) Bushfire risk is managed in conjunction with the conservation of the ecological and scenic values of the lot or premises and surrounding landscape; (2) Minimise adverse impacts of visual scarring due to vegetation clearance on hillsides and ridgelines; (3) Fuel reduction areas maximise the use of existing or natural fire breaks and minimise the need to clear additional native plants; (4) Bushland areas are segmented with fire breaks in the form of walking trails and infrastructure or the like to assist in fire management practices; (5) Landscaping incorporates species that are less likely to exacerbate a bushfire event.	**P2.**	(1) No probable solution identified; (2) Avoid locating uses and other development where it will extend beyond the canopy height of vegetation on a ridgeline or on slopes greater than 15 percent (1 in 7); (3) Fuel reduction areas, as detailed in P1.(3)(a) and (b) are - (a) measured from buildings and structures associated with the use and - (i) fully contained within the site; or (ii) where the lot contains a development envelope is within this defined area; or (iii) co-located with other facilities or infrastructure such as open space, stormwater management infrastructure, on-site wastewater treatment

Assessable Development			
Specific Outcomes		**Probable Solutions**	
			areas or the like; (4) No probable solution identified; (5) Low flammability plant species identified in Table 2 are used for any planted landscaping within 10 metres of a building or structure. **Note -** Sites with an average slopes in excess of 15 percent (1 in 7) require a geotechnical analysis report. Refer to Part 11 - Planning Scheme Policy 9 - Infrastructure Works.
S3.	Hazardous Materials - Public safety and the environment are not adversely affected by the detrimental impacts of bushfire on hazardous materials manufactured or stored in bulk.	**P3.**	Development complies with the recommendations of a bushfire management plan. **Note -** Refer to Part 11 - Planning Scheme Policy 1 - Bushfire Hazard for further information on bushfire management plans.
S4.	Community Infrastructure (1) Community infrastructure is able to function effectively during and immediately after bushfire events.	**P4.**	(1) Community infrastructure - (a) is not located on land that is shown as having a high, medium or SMBI bushfire hazard on this overlay map; or (b) does not result in any new building work other than an extension of less than 20m^2 gross floor area; or (c) is located where site assessment identifies that the use is able to function effectively during and immediately after a bushfire event. **Note -** ■ If the proposal complies with P4.(1)(a) no further assessment is required in relation to bushfire hazard. ■ Where the use will be within a bushfire hazard, site-specific assessment is necessary to demonstrate that the bushfire hazard is low on the proposed site. ■ Refer to Part 11 - Planning Scheme Policy 1 - Bushfire Hazard for requirements of a bushfire

Assessable Development			
Specific Outcomes		Probable Solutions	
			hazard assessment and management plan.

Table 1 -SMBI Bushfire Hazard Fuel Reduction Area Requirements

Fuel Reduction Area Type - See Note 1	Description			Applicable to -
	Slashed Zone See Note 2	Fuel Removal Zone See Note 3	Total Fuel Reduction Area See Note 4	
Type 2	10 metres	5 metres	15 metres	■ SMBI bushfire hazard
Type 4	5 metres	3 metres	8 metres	■ SMBI bushfire hazard if in conjunction with buildings constructed in accordance with *Australian Standard 3959:1999 - Construction of Buildings in Bushfire Prone Areas*

Note 1 - The Rural Fire Service identifies 7 types of fuel reduction areas. Of these only 2 and 4 are applicable to the planning scheme area.
Note 2 - Slashed Zone is the area where all understorey and ground cover is removed, trees greater than 15cm diameter at chest height are retained and provides for the easy movement of fire fighting vehicles along the Fuel Reduced Area in all situations.
Note 3 - Fuel Removal Zone is the area where trees and groundcovers are retained and vegetation that is not expected to exceed 1.5 metres in height on maturing is selectively removed.
Note 4 - Fuel Reduction Areas are measured from buildings and structures associated with the development. Refer to Planning Scheme Policy 1 - Bushfire Hazard, section 1.12 for further information.

Table 2 - Low Flammability Plant Species

Mainland		SMBI	
Species	**Common Name**	**Species**	**Common Name**
Acacia melanoxylon	Blackwood	Acacia melanoxylon	Blackwood
Acacia sophorae	Coastal Wattle	Acacia sophorae	Coastal Wattle
Acmena smithii	Lilly Pilly	Banksia integrifolia	Coastal Banksia
Banksia integrifolia	Coastal Banksia	Banksia spinulosa var collina	
Banksia spinulosa var collina		Casuarina glauca	Swamp Oak
Brachychiton acerifolius	Flame	Cupaniopsis anacardioides	Tuckeroo
Buckinghamia celcissima	Ivory Curl	Dodoneaea spp.	
Casuarina glauca	Swamp Oak	Elaeocarpus reticulatus	Blueberry Ash
Cupaniopsis anacardioides	Tuckeroo	Ficus macrophylla	Moreton Bay Fig
Dodoneaea spp.		Glochidion ferdinandii	Cheese Wood
Elaeocarpus reticulatus	Blueberry Ash	Hymenosporum flavum	Native Frangipani
Ficus macrophylla	Moreton Bay Fig	Jacksonia scoparia	Dog Wood
Glochidion ferdinandii	Cheese Wood	Lophostemon confertus	Brushbox
Guioa semiglauca		Mallotus philippensis	Red Kamala
Hymenosporum flavum	Native Frangipani	Myoporum acuminatum	Boobialla
Jacksonia scoparia	Dog Wood	Pittosporum revolutum	Brisbane Laurel
Lophostemon confertus	Brushbox	Rapanea variabilis	
Mallotus philippensis	Red Kamala	Carpobrotus glaucescens	Pigs Face
Myoporum acuminatum	Boobialla	Hardenbergia violacea	
Pittosporum revolutum	Brisbane Laurel	Kennedia rubicunda	
Pittosporum rhombifolium		Lomandra longifolia	
Rapanea variabilis		Themeda triandra	
Stenocarpus sinuatus		Viola hederacea	
Carpobrotus glaucescens	Pigs Face	Chrysocephalum apiculatum	
Hardenbergia violacea			
Kennedia rubicunda			
Lomandra longifolia			
Themeda triandra			
Viola hederacea			
Chrysocephalum apiculatum			

Division 4 - Electricity Infrastructure Overlay

5.4.1 Introduction

(1) This division contains the provisions for the Electricity Infrastructure Overlay. They are -

(a) The Electricity Infrastructure Overlay Tables of Assessment, that incorporates -
- (i) Levels of assessment for development in the Electricity Infrastructure Overlay (section 5.4.2);
- (ii) Assessment criteria for development in the Electricity Infrastructure Overlay (section 5.4.3);
- (iii) Electricity Infrastructure Overlay - Table of Assessment for Material Change of Use of Premises (section 5.4.4);
- (iv) Electricity Infrastructure Overlay - Table of Assessment for Other Development not associated with a Material Change of Use of Premises (section 5.4.5).

(b) The Electricity Infrastructure Overlay Code, that incorporates -
- (i) Compliance with the Electricity Infrastructure Overlay Code (section 5.4.6);
- (ii) Overall Outcomes for the Electricity Infrastructure Overlay Code (section 5.4.7);
- (iii) Acceptable Solutions applicable to Self-Assessable Development (section 5.4.8);
- (iv) Specific Outcomes and Probable Solutions applicable to Assessable Development (section 5.4.9).

5.4.2 Levels of assessment for development affected by the Electricity Infrastructure Overlay

(1) Sections 5.4.4 and 5.4.5 identify the level of assessment for development affected by the Electricity Infrastructure Overlay, as follows -

(a) section 5.4.4 Electricity Infrastructure Overlay - Table of Assessment for Making a Material Change of Use of Premises -
- (i) column 1 identifies uses that are exempt, self-assessable or assessable;
- (ii) column 2 identifies the level of assessment for the uses listed in column 1;
- (iii) where the use is defined in Part 9 - Schedule 3 - Dictionary, Division 1 - Uses and is not listed in column 1 it is exempt;
- (iv) where the use is not defined in Part 9 - Schedule 3 - Dictionary, Division 1 - Uses and is not listed in column 1 it is code assessable.

(b) section 5.4.5 Electricity Infrastructure Overlay - Table of Assessment for Other Development not associated with a Material Change of Use of Premises -
- (i) column 1 identifies other development that is exempt, self-assessable or assessable;
- (ii) column 2 identifies the level of assessment for other development listed in column 1;
- (iii) where the other development is not listed in column 1 it is exempt.

(2) Other overlays may alter the level of assessment identified in 1(a) and (b)[5.15].

[5.15] Refer to Part 5 - Overlays to determine the level of assessment for the use or other development where another Overlay affects the lot and Part 1, section 1.2.5(10)(f) that explains how the highest level of assessment applies.

5.4.3 Assessment criteria for development in the Electricity Infrastructure Overlay

(1) Development affected by the Electricity Infrastructure Overlay is assessed against the assessment criteria listed in column 3 of sections 5.4.4 and 5.4.5, as follows -

(a) acceptable solutions in section 5.4.8 of the Electricity Infrastructure Overlay Code for self-assessable development; or

(b) specific outcomes in section 5.4.9 of the Electricity Infrastructure Overlay Code for assessable development.

(2) Self-assessable development that does not comply with all the acceptable solutions in section 5.4.8 of the Electricity Infrastructure Overlay Code is assessable development.

5.4.4 Electricity Infrastructure Overlay - Table of Assessment for Material Change of Use of Premises

Electricity Infrastructure Overlay -
Table of Assessment for Material Change of Use of Premises

column 1	column 2	column 3
Use[5.16]	**Level of Assessment**[5.17]	**Assessment Criteria**
■ Aged Persons and Special Needs Housing ■ Agriculture ■ Airport ■ Animal Keeping ■ Apartment Building ■ Bed and Breakfast ■ Brothel ■ Bulky Goods Showroom ■ Car Wash Facility ■ Caretakers Dwelling ■ Cemetery ■ Child Care Centre ■ Commercial Office ■ Community Facility ■ Display and Sale Activity ■ Display Dwelling ■ Drive Through Restaurant ■ Dual Occupancy ■ Dwelling House ■ Education Facility ■ Emergency Services ■ Estate Sales Office ■ Extractive Industry ■ Forestry ■ Funeral Parlour ■ Garden Centre ■ General Industry ■ Health Care Centre ■ Heavy Industry ■ Home Business ■ Hospital ■ Hotel ■ Indoor Recreation Facility ■ Institution ■ Intensive Agriculture ■ Landscape Supply Depot ■ Marine Services ■ Mobile Home Park ■ Multiple Dwelling ■ Night Club ■ Outdoor Dining ■ Outdoor Recreation Facility	Self-Assessable If complying with the assessment criteria being the acceptable solutions listed in column 3 Code Assessable If not self-assessable	■ Acceptable Solutions in section 5.4.8 of the Electricity Infrastructure Overlay Code ■ Electricity Infrastructure Overlay Code

[5.16] See Part 9 - Schedule 3 - Dictionary, Division 1 - Uses for defined uses.
[5.17] See Part 9 - Schedule 3 - Dictionary, Division 2 - Administrative Terms for a definition of level of assessment.

Electricity Infrastructure Overlay - Table of Assessment for Material Change of Use of Premises

column 1	column 2	column 3
Use[5.16]	**Level of Assessment**[5.17]	**Assessment Criteria**
Continued - ■ Park ■ Passenger Terminal ■ Place of Worship ■ Produce Store ■ Refreshment Establishment ■ Relatives Apartment ■ Retail Warehouse ■ Roadside Stall ■ Rural Enterprise ■ Service Industry ■ Service Station ■ Shop ■ Small Lot House ■ Telecommunications Facility ■ Temporary Use ■ Tourist Accommodation ■ Tourist Park ■ Utility Installation[5.18] ■ Vehicle Depot ■ Vehicle Parking Station ■ Vehicle Repair Premises ■ Veterinary Surgery ■ Warehouse	Self-Assessable If complying with the assessment criteria being the acceptable solutions listed in column 3 Code Assessable If not self-assessable	■ Acceptable Solutions in section 5.4.8 of the Electricity Infrastructure Overlay Code ■ Electricity Infrastructure Overlay Code
Defined uses not listed in column 1	Exempt	
Uses not defined in Part 9 - Schedule 3 - Dictionary, Division 1 - Uses	Code Assessable	■ Electricity Infrastructure Overlay Code

[5.18] Except where required for electric power distribution.

5.4.5 Electricity Infrastructure Overlay - Table of Assessment for Other Development not associated with a Material Change of Use of Premises

Electricity Infrastructure Overlay - Table of Assessment for Other Development

column 1	column 2	column 3
Other Development	**Level of Assessment**[5.19]	**Assessment Criteria**
Reconfiguration for -		
Creating lots by subdividing another lot by Standard Format Plan[5.20]	Code Assessable	■ Electricity Infrastructure Overlay Code
Building Work for -		
■ Communications Structures ■ Domestic Additions ■ Domestic Outbuilding ■ On-site raising or relocation of an existing dwelling unit ■ Private Swimming Pool ■ Private Tennis Court	Self-Assessable If complying with the assessment criteria being the acceptable solutions listed in column 3 Code Assessable If not self-assessable	■ Acceptable Solutions in section 5.4.8 of the Electricity Infrastructure Overlay Code ■ Electricity Infrastructure Overlay Code
Operational Work for -		
■ Constructing a Domestic Driveway Crossover ■ Placing an Advertising Device on Premises	Self-Assessable If complying with the assessment criteria being the acceptable solutions listed in column 3 Code Assessable If not self-assessable	■ Acceptable Solutions in section 5.4.8 of the Electricity Infrastructure Overlay Code ■ Electricity Infrastructure Overlay Code
■ Excavation and Fill	Exempt If - (1) Disturbing less than 50m^3 of soil; (2) A height/depth not exceeding 300mm measured from ground level Self-Assessable If - (1) Not Exempt; (2) Complying with the assessment criteria being	■ Acceptable Solutions in section 5.4.8 of the Electricity Infrastructure Overlay Code

[5.19] See Part 9 - Schedule 3 - Dictionary, Division 2 - Administrative Terms for a definition of level of assessment.
[5.20] Whether or not having a Community Management Statement.

Electricity Infrastructure Overlay - Table of Assessment for Other Development

column 1	column 2	column 3
Other Development	**Level of Assessment**[5.19]	**Assessment Criteria**
	the acceptable solutions listed in column 3 Code Assessable If not self-assessable	■ Electricity Infrastructure Overlay Code
Operational Work for Reconfiguring a Lot (by Standard Format Plan)	Code Assessable	■ Electricity Infrastructure Overlay Code
All other development not listed in column 1	Exempt	

5.4.6 Compliance with the Electricity Infrastructure Overlay Code

(1) Development that is consistent with the following complies with the Electricity Infrastructure Overlay Code -

(a) acceptable solutions in section 5.4.8 where self-assessable development; or

(b) specific outcomes in section 5.4.9 where assessable development.

Note -

All uses and other development within an electricity easement require approval by Energex regardless of whether the use or other development is assessable under the planning scheme.

5.4.7 Overall Outcomes of the Electricity Infrastructure Overlay Code

(1) The overall outcomes are the purpose of the Electricity Infrastructure Overlay Code.

(2) The overall outcomes sought for the Electricity Infrastructure Overlay Code are the following -

(a) to protect the function of electricity infrastructure;

(b) to protect the visual amenity of uses and other development in proximity to electricity infrastructure.

5.4.8 Acceptable Solutions applicable to Self-Assessable Development

Self-Assessable Development	
Acceptable Solutions	
A1.	(1) Uses and other development and any sensitive activities associated with proposed uses, such as child play areas or the like, do not extend into an electricity easement as shown on this overlay map, with the exception of accessways or driveways associated with - (a) agriculture; or (b) bed and breakfast; or (c) dwelling house; or (d) home business; or (e) relatives apartment.

5.4.9 Specific Outcomes and Probable Solutions applicable to Assessable Development

Assessable Development			
Specific Outcomes		**Probable Solutions**	
S1.1	(1) Uses and other development, excluding reconfiguration, are located to - (a) protect the supply of electric power; (b) facilitate maintenance access to electricity infrastructure.	**P1.1**	(1) Uses and other development and any sensitive activities associated with the proposed use, such as child play areas or the like, do not extend into an electricity easement as shown on this overlay map, with the exception of accessways or driveways associated with - (a) agriculture; or (b) bed and breakfast; or (c) dwelling house; or (d) home business; or (e) relatives apartment.
S1.2	(1) Reconfiguration - (a) facilitates maintenance access to electricity infrastructure; (b) results in a lot layout that assists in bringing land within an electricity easement as shown on this overlay map into the ownership of - (i) the electricity distribution provider; or (ii) the local government as a non-contribution component of open space.	**P1.2**	(1) Reconfiguration results in an electricity easement as shown on this overlay map being wholly contained within a single lot that has access to a public road.
S1.3	(1) The visual impact of electricity infrastructure on uses and other development is minimised by providing landscaping that - (a) screens electricity infrastructure from adjoining development; (b) does not interfere with the operation of electricity infrastructure; (c) does not obstruct access to electricity infrastructure.	**P1.3**	(1) Uses and other development incorporate vegetated landscaping that - (a) does not overhang electricity infrastructure; (b) is not located closer than 3.5 metres to electricity infrastructure; (c) where resulting in the creation of new lots - maintains and enhances existing vegetation or supplements this vegetation with additional planting to form a 20 metre wide buffer external to an electricity easement as shown on this overlay map.

Division 5 - Extractive Resources Overlay

5.5.1 Introduction

(1) This division contains the provisions for the Extractive Resources Overlay. They are -

(a) The Extractive Resources Overlay Tables of Assessment, that incorporates -
- (i) Levels of assessment for development in the Extractive Resources Overlay (section 5.5.2);
- (ii) Assessment criteria for development in the Extractive Resources Overlay (section 5.5.3);
- (iii) Extractive Resources Overlay - Table of Assessment for Material Change of Use of Premises (section 5.5.4);
- (iv) Extractive Resources Overlay - Table of Assessment for Other Development not associated with a Material Change of Use of Premises (section 5.5.5).

(b) The Extractive Resources Overlay Code, that incorporates -
- (i) Compliance with the Extractive Resources Overlay Code (section 5.5.6);
- (ii) Overall Outcomes for the Extractive Resources Overlay Code (section 5.5.7);
- (iii) Specific Outcomes and Probable Solutions applicable to Assessable Development (section 5.5.8).

5.5.2 Levels of assessment for development affected by the Extractive Resources Overlay

(1) Sections 5.5.4 and 5.5.5 identify the level of assessment for development affected by the Extractive Resources Overlay, as follows -

(a) section 5.5.4 Extractive Resources Overlay - Table of Assessment for Making a Material Change of Use of Premises -
- (i) column 1 identifies uses that are exempt or assessable;
- (ii) column 2 identifies the level of assessment for the uses listed in column 1;
- (iii) where the use is defined in Part 9 - Schedule 3 - Dictionary, Division 1 - Uses and is not listed in column 1 it is exempt;
- (iv) where the use is not defined in Part 9 - Schedule 3 - Dictionary, Division 1 - Uses and is not listed in column 1 it is code assessable.

(b) section 5.5.5 Extractive Resources Overlay - Table of Assessment for Other Development not associated with a Material Change of Use of Premises -
- (i) column 1 identifies other development that is exempt or assessable;
- (ii) column 2 identifies the level of assessment for other development listed in column 1;
- (iii) where the other development is not listed in column 1 it is exempt.

(2) Other overlays may alter the level of assessment identified in 1(a) and (b)[5.21].

5.5.3 Assessment criteria for development in the Extractive Resources Overlay

(1) Development affected by the Extractive Resources Overlay is assessed against the assessment criteria listed in column 3 of sections 5.5.4 and 5.5.5, being the specific outcomes in section 5.5.8 of the Extractive Resources Overlay Code for assessable development.

[5.21] Refer to Part 5 - Overlays to determine the level of assessment for the use or other development where another overlay affects the lot and Part 1, section 1.2.5(10)(f) that explains how the highest level of assessment applies.

5.5.4 Extractive Resources Overlay - Table of Assessment for Material Change of Use of Premises

Extractive Resources Overlay -
Table of Assessment for Material Change of Use of Premises

column 1	column 2	column 3
Use[5.22]	**Level of Assessment**[5.23]	**Assessment Criteria**
■ Bed and Breakfast ■ Caretakers Dwelling ■ Community Facility ■ Dual Occupancy ■ Dwelling House ■ Refreshment Establishment ■ Relatives Apartment ■ Tourist Accommodation ■ Tourist Park	Self-Assessable If complying with the assessment criteria being the acceptable solutions listed in column 3 Code Assessable If not self-assessable	■ Acceptable Solutions in section 5.5.8 of the Extractive Resources Overlay Code
■ Aged Persons and Special Needs Housing ■ Apartment Building ■ Child Care Centre ■ Display Dwelling ■ Education Facility ■ Health Care Centre ■ Home Business ■ Hospital ■ Hotel ■ Institution ■ Mobile Home Park ■ Multiple Dwelling ■ Outdoor Dining ■ Place of Worship ■ Small Lot House	Code Assessable	■ Extractive Resources Overlay Code
Defined uses not listed in column 1	Exempt	
Uses not defined in Part 9 - Schedule 3 - Dictionary, Division 1 - Uses	Code Assessable	■ Extractive Resources Overlay Code

[5.22] See Schedule 3 - Dictionary, Division 1 - Uses for defined uses.
[5.23] See Schedule 3 - Dictionary, Division 2 - Administrative Terms for a definition of level of assessment.

5.5.5 Extractive Resources Overlay - Table of Assessment for Other Development not associated with a Material Change of Use of Premises

Extractive Resources Overlay - Table of Assessment for Other Development

column 1	column 2	column 3
Other Development	**Level of Assessment**[5.24]	**Assessment Criteria**
Reconfiguration for -		
Creating lots by subdividing another lot by Standard Format Plan[5.25]	Code Assessable	■ Extractive Resources Overlay Code
■ Rearranging the boundaries of a lot by registering a plan of subdivision; or ■ Dividing land into parts by Agreement; or ■ Creating an easement giving access to a lot from a constructed road	Code Assessable	■ Extractive Resources Overlay Code
Building Work for -		
■ Domestic Additions ■ On-site raising or relocation of an existing dwelling unit	Code Assessable	■ Extractive Resources Overlay Code
All other development not listed in column 1	Exempt	

[5.24] See Schedule 3 - Dictionary, Division 2 - Administrative Terms for a definition of level of assessment.
[5.25] Whether or not having a Community Management Statement.

5.5.6 Compliance with the Extractive Resources Overlay Code

(1) Development that is consistent with the specific outcomes in section 5.5.7 complies with the Extractive Resources Overlay Code.

Note -

Planning Scheme Policy 5 - Environmental Emissions will assist in achieving specific outcomes within the Extractive Resources Overlay Code.

5.5.7 Overall Outcomes of the Extractive Resources Overlay Code

(1) The overall outcomes are the purpose of the Extractive Resources Overlay Code.

(2) The overall outcomes sought for the Extractive Resources Overlay Code are the following -

(a) to protect potential resources and the ongoing operation of extractive industry from uses that are sensitive to its operations;

(b) to ensure uses and other development -

(i) are sited and designed to avoid noise impacts and other potential environmental emissions generated by extractive industry;

(ii) incorporate attenuation measures that minimise noise and other potential environmental emissions whilst respecting the landscape setting.

Note -

- The Road and Rail Noise Impacts Overlay aims at protecting haulage routes associated with Extractive Industry.
- Mining tenements are shown as a notation on the overlay map in accordance with s319(4) of the *Mineral Resources Act 1989*. The advice of the Minister for Natural Resources, Mines and Energy should be sought in writing for development in an area covered by a mining tenement.
- Key resources areas and buffers to these areas are as defined by Natural Resources, Mines and Energy.

5.5.8 Acceptable Solutions applicable to Self-Assessable Development

Self-Assessable Development	
Acceptable Solutions	
A1.	Uses and other development are located on that part of a lot of premises not shown on this overlay map.

5.5.9 Specific Outcomes and Probable Solutions applicable to Assessable Development

Assessable Development			
Specific Outcomes		**Probable Solutions**	
S1.	Where proposed on any part of a lot or premises shown as a Resource Area on this overlay map - (1) Uses and other development located within resource areas do not adversely impact upon the - (a) on-going operation of the extractive industry; (b) potential expansion of the extractive industry.	**P1.**	(1) No probable solution identified.
S2.1	Where proposed on any part of a lot or premises shown as a Resource Buffer on this overlay map - (1) Uses and other development do not adversely impact on the current or future economic development of the extractive resource through - (a) no increase in the number of residential lots; (b) ensuring uses, other than a dwelling house on an existing lot, that increase the number of people living, working or congregating within the buffer area are not established.	**P2.1**	(1) No probable solution identified.
S2.2	(1) Uses and other development ameliorate noise and environmental emissions by - (a) siting to minimise the impact through distance, layout and orientation; (b) design and construction techniques; (c) incorporating additional measures, such as - (i) vegetated buffers; (ii) vegetated earth mounds; (iii) fencing.	**P2.2**	(1) Uses and other development - (a) are capable of achieving noise levels within all buildings and structures to the levels detailed in Table 1 - Noise Levels at Sensitive Receiving Environments; (b) utilise construction, insulation and glazing materials with a high noise transmission loss in accordance with *Australian Standard 3671 - 1989: Acoustics - Road traffic noise intrusion - Building siting and construction.*

Assessable Development			
Specific Outcomes		**Probable Solutions**	
S2.3	(1) Noise attenuation measures utilised - (a) do not restrict access or movement for people or native animals; (b) are integrated with the streetscape and landscape setting; (c) are designed and constructed for longevity and a low level of maintenance.	**P2.3**	(1) No probable solution identified.
S2.4	Uses and other development incorporate measures to reduce or avoid the impacts of air blast overpressure, ground vibration and dust.	**P2.4**	No probable solution identified. **Note -** Refer to Part 11 - Planning Scheme Policy 5 - Environmental Emissions to assist in achieving S2.2, S2.3 and S2.4.

Table 1 - Noise Levels at Sensitive Receiving Environments

Period	Noise level at Sensitive Receiving Environment
7am - 10pm	Background noise level plus 5 dB(A)
10pm - 7am	Background noise level plus 3 dB(A)

Notes -

(1) Measured as the adjusted maximum sound pressure level, $L_{Amax,adj,T}$ - as defined in the *Noise Measurement Manual* (Environmental Protection Agency, 2000).

(2) The local government will also give regard to an environmental licence or approval issued under the *Environmental Protection Act 1994* for the extractive industry in determining the noise level criteria.

(3) For each acoustic report, environmental noise and vibration is assessed and measured in accordance with the relevant guidelines outlined in the Australian Standards listed in the *Environmental Protection (Noise) Policy, 1997* or as updated.

(4) For assessment of background noise level, any noise caused by existing or possible future extractive industry should not be included in that assessment.

Division 6 - Flood Prone, Storm Tide and Drainage Constrained Land Overlay

5.6.1 Introduction

(1) This division contains the provisions for the Flood Prone, Storm Tide and Drainage Constrained Land Overlay. They are -

(a) The Flood Prone, Storm Tide and Drainage Constrained Land Overlay Tables of Assessment, that incorporates -
- (i) Levels of assessment for development in the Flood Prone, Storm Tide and Drainage Constrained Land Overlay (section 5.6.2);
- (ii) Assessment criteria for development in the Flood Prone, Storm Tide and Drainage Constrained Land Overlay (section 5.6.3);
- (iii) Flood Prone, Storm Tide and Drainage Constrained Land Overlay - Table of Assessment for Material Change of Use of Premises (section 5.6.4);
- (iv) Flood Prone, Storm Tide and Drainage Constrained Land Overlay - Table of Assessment for Other Development not associated with a Material Change of Use of Premises (section 5.6.5).

(b) The Flood Prone, Storm Tide and Drainage Constrained Land Overlay Code, that incorporates -
- (i) Compliance with the Flood Prone, Storm Tide and Drainage Constrained Land Overlay Code (section 5.6.6);
- (ii) Overall Outcomes for the Flood Prone, Storm Tide and Drainage Constrained Land Overlay Code (section 5.6.7);
- (iii) Specific Outcomes and Probable Solutions applicable to Assessable Development (section 5.6.8).

5.6.2 Levels of assessment for development affected by the Flood Prone, Storm Tide and Drainage Constrained Land Overlay

(1) Sections 5.6.4 and 5.6.5 identify the level of assessment for development affected by the Flood Prone, Storm Tide and Drainage Constrained Land Overlay, as follows -

(a) section 5.6.4 Flood Prone, Storm Tide and Drainage Constrained Land Overlay - Table of Assessment for Making a Material Change of Use of Premises -
- (i) column 1 identifies uses that are exempt or assessable;
- (ii) column 2 identifies the level of assessment for the uses listed in column 1;
- (iii) where the use is defined in Part 9 - Schedule 3 - Dictionary, Division 1 - Uses and is not listed in column 1 it is exempt;
- (iv) where the use is not defined in Part 9 - Schedule 3 - Dictionary, Division 1 - Uses and is not listed in column 1 it is code assessable.

(b) section 5.6.5 Flood Prone, Storm Tide and Drainage Constrained Land Overlay - Table of Assessment for Other Development not associated with a Material Change of Use of Premises -
- (i) column 1 identifies other development that is exempt or assessable;
- (ii) column 2 identifies the level of assessment for other development listed in column 1;
- (iii) where the other development is not listed in column 1 it is exempt.

(2) Other overlays may alter the level of assessment identified in 1(a) and (b)[5.26].

[5.26] Refer to Part 5 - Overlays to determine the level of assessment for the use or other development where another overlay affects the lot and Part 1 - section 1.2.5(10)(f) that explains how the highest level of assessment applies.

Note -

If the use or other development is on a premises that has been created through a reconfiguration approval, since the current RPS version update, the matters for consideration against the Code are deemed to have been addressed. This applies to uses and other development that are listed as self-assessable in the applicable zone code.

5.6.3 Assessment criteria for development in the Flood Prone, Storm Tide and Drainage Constrained Land Overlay

(1) Development affected by the Flood Prone, Storm Tide and Drainage Constrained Land Overlay is assessed against the assessment criteria listed in column 3 of sections 5.6.4 and 5.6.5, being the specific outcomes in section 5.6.8 of the Flood Prone, Storm Tide and Drainage Constrained Land Overlay for assessable development.

5.6.4 Flood Prone, Storm Tide and Drainage Constrained Land Overlay - Table of Assessment for Material Change of Use of Premises

Flood Prone, Storm Tide and Drainage Constrained Land Overlay - Table of Assessment for Material Change of Use of Premises

column 1	column 2	column 3
Use[5.27]	**Level of Assessment**[5.28]	**Assessment Criteria**
■ Bulky Goods Showroom ■ Car Wash Facility ■ Commercial Office ■ Display and Sale Activity ■ Funeral Parlour ■ Garden Centre ■ General Industry ■ Health Care Centre ■ Landscape Supply Depot ■ Place of Worship ■ Produce Store ■ Refreshment Establishment ■ Retail Warehouse ■ Service Industry ■ Service Station ■ Shop ■ Vehicle Depot ■ Vehicle Repair Premises ■ Veterinary Surgery ■ Warehouse	Exempt If - (1) A tenancy change; (2) Involving only minor building work to an existing building. Code Assessable If not Exempt	■ Flood Prone, Storm Tide and Drainage Constrained Land Overlay Code
■ Aged Persons and Special Needs Housing ■ Agriculture ■ Airport ■ Animal Keeping ■ Apartment Building ■ Brothel ■ Cemetery ■ Child Care Centre ■ Community Facility ■ Drive Through Restaurant ■ Dual Occupancy ■ Dwelling House ■ Education Facility ■ Emergency Services ■ Estate Sales Office ■ Extractive Industry ■ Forestry ■ Heavy Industry ■ Hospital ■ Hotel ■ Indoor Recreation Facility	Code Assessable	■ Flood Prone, Storm Tide and Drainage Constrained Land Overlay Code

■

[5.27] See Part 9 - Schedule 3 - Dictionary, Division 1 - Uses for defined uses.
[5.28] See Part 9 - Schedule 3 - Dictionary, Division 2 - Administrative Terms for a definition of level of assessment.

Flood Prone, Storm Tide and Drainage Constrained Land Overlay - Table of Assessment for Material Change of Use of Premises

column 1	column 2	column 3
Use[5.27]	**Level of Assessment**[5.28]	**Assessment Criteria**
Continued - ■ Institution ■ Intensive Agriculture ■ Marine Services ■ Mobile Home Park ■ Multiple Dwelling ■ Night Club ■ Outdoor Dining ■ Outdoor Recreation Facility ■ Park ■ Passenger Terminal ■ Relatives Apartment ■ Roadside Stall ■ Rural Enterprise ■ Small Lot House ■ Telecommunications Facility ■ Tourist Accommodation ■ Tourist Park ■ Utility Installation ■ Vehicle Parking Station	Code Assessable	■ Flood Prone, Storm Tide and Drainage Constrained Land Overlay Code
Defined uses not listed in column 1	Exempt	
Uses not defined in Part 9 - Schedule 3 - Dictionary, Division 1 - Uses	Code Assessable	■ Flood Prone, Storm Tide and Drainage Constrained Land Overlay Code

5.6.5 Flood Prone, Storm Tide and Drainage Constrained Land Overlay - Table of Assessment for Other Development not associated with a Material Change of Use of Premises

Flood Prone, Storm Tide and Drainage Constrained Land Overlay - Table of Assessment for Other Development

column 1	column 2	column 3
Other Development	**Level of Assessment[5.29]**	**Assessment Criteria**
Reconfiguration for -		
Creating lots by subdividing another lot by Standard Format Plan[5.30]	Code Assessable	■ Flood Prone, Storm Tide and Drainage Constrained Land Overlay Code
■ Rearranging the boundaries of a lot by registering a plan of subdivision; or ■ Dividing land into parts by Agreement; or ■ Creating an easement giving access to a lot from a constructed road	Code Assessable	■ Flood Prone, Storm Tide and Drainage Constrained Land Overlay Code
Building Work for -		
■ Domestic Additions ■ Domestic Outbuilding ■ On-site raising or relocation of an existing dwelling unit ■ Private Swimming Pool ■ Private Tennis Court	Code Assessable	■ Flood Prone, Storm Tide and Drainage Constrained Land Overlay Code
Operational Work for -		
■ Excavation and Fill	Exempt If - (1) Disturbing less than 50m^3 of soil; (2) A height/depth not exceeding 300mm measure from ground level Code Assessable If not Exempt	■ Flood Prone, Storm Tide and Drainage Constrained Land Overlay Code

■

[5.29] See Part 9 - Schedule 3 - Dictionary, Division 2 - Administrative Terms for a definition of level of assessment.
[5.30] Whether or not having a Community Management Statement.

Flood Prone, Storm Tide and Drainage Constrained Land Overlay - Table of Assessment for Other Development

column 1	column 2	column 3
Other Development	**Level of Assessment[5.29]**	**Assessment Criteria**
■ Operational Work for Reconfiguring a Lot (by Standard Format Plan) ■ Private Waterfront Structure	Code Assessable	■ Flood Prone, Storm Tide and Drainage Constrained Land Overlay Code
All other development not listed in column 1	Exempt	

5.6.6 Compliance with the Flood Prone, Storm Tide and Drainage Constrained Land Overlay Code

(1) Development that is consistent with the specific outcomes in section 5.6.8 complies with the Flood Prone, Storm Tide and Drainage Constrained Land Overlay Code.

Note -

The following planning scheme policies will assist in achieving specific outcomes within the Flood Prone, Storm Tide and Drainage Constrained Land Overlay Code -

- Planning Scheme Policy 4 - Ecological Impact;
- Planning Scheme Policy 7 - Flood Prone, Storm Tide and Drainage Constrained Land;
- Planning Scheme Policy 14 - Waterways, Wetlands and Moreton Bay.

In accordance with part 4, section 53(1) of the *Standard Building Regulation 1993* -

a. land liable to inundation by flood and storm tide is the land subject to the defined flood or storm tide event, being the 1 percent Annual Exceedance Probability (AEP) for flood and 2.4 metre Australian Height Datum (AHD) for storm tide;

b. floor levels of habitable rooms must be built 300mm above this defined flood or storm tide event level.

5.6.7 Overall Outcomes of the Flood Prone, Storm Tide and Drainage Constrained Land Overlay Code

(1) The overall outcomes are the purpose of the Flood Prone, Storm Tide and Drainage Constrained Land Overlay Code.

(2) The overall outcomes sought for the Flood Prone, Storm Tide and Drainage Constrained Land Overlay Code are the following -

(a) to provide acceptable levels of flood immunity for people, buildings and other structures;

(b) to minimise the risk of damage and property loss due to flooding or storm tide;

(c) to protect the hydraulic capacity and ecological functions and values of waterways, Moreton Bay foreshore and lands which naturally accommodate the flow of waters during flood or storm tide events;

(d) to minimise adverse impacts associated with overland flow, high water table and seepage on the Southern Moreton Bay Islands (SMBI).

5.6.8 Specific Outcomes and Probable Solutions applicable to Assessable Development

Assessable Development			
Specific Outcomes		**Probable Solutions**	
	Where proposed on a lot or premises shown on this overlay map as - ■ Flood Prone or Storm Tide; or ■ SMBI Flood Prone and Storm Tide		
S1.	(1) Uses and other development avoid the risk of flooding by not being undertaken on land below the 1 percent AEP (1 in 100 year ARI) flood and storm tide level; or **Note -** ■ 1 percent Annual Exceedance Probability (AEP) is equivalent to the 1 in 100 year Average Recurrence Interval (ARI) and applies to flood and storm tide events. ■ For the purposes of this planning scheme the defined flood event (DFE) for the planning scheme area is the 1 percent AEP flood and storm tide (RL 2.4 metre AHD) level. ■ Survey investigation and analysis is necessary to accurately identify the 1 percent AEP for flooding and storm tide constraints. ■ A licensed surveyor performs survey work, with all analysis work undertaken by a suitably qualified Registered Professional Engineer of Queensland (RPEQ). All levels are noted as AHD levels. ■ To assist in performing the survey investigation and analysis, refer to Part 11 - Planning Scheme Policy 7 - Flood Prone, Storm Tide and Drainage Constrained Land. ■ In some instances the local government may have undertaken detailed flood survey or have on record a flood study for the site that has been undertaken by a suitably qualified person. Contact the local government to verify if this information is available.	**P1.**	(1) Avoid the risk of flooding by- (a) for a material change of use - buildings are sited on land that is above the 1 percent AEP flood and storm tide level; or (b) reconfiguration ensures no lots are created that adjoin or extend over the flood and storm tide level; or (c) for building work - habitable floor levels are above flood and storm tide level; or (d) operational work is undertaken on land above the flood or storm tide level; (e) having at least one accessway or road evacuation route that is passable for emergency evacuations during all flood or storm tide events up to and including the 1 percent AEP level; or
	(2) Uses and other development - (a) maintain safety of people and property; (b) ensure minimal impact on the environment; (c) protect native plants; (d) do not alter the flood characteristics of land below		(2) No probable solution identified; or

Assessable Development			
	Specific Outcomes		**Probable Solutions**
	the flood or storm tide level by - (i) ensuring the free flow of flood or tidal waters; (ii) not concentrating flood or tidal waters, or intensifying flow velocity on land up or downstream; (iii) not reducing the floodplain storage capacity; (e) maintain visual amenity; (f) minimise the extent of excavation or fill; or **Note -** ■ A detailed environmental investigation and analysis undertaken by a suitably qualified person is necessary to demonstrate no adverse environmental impacts. ■ To assist in performing the environmental investigation, refer to Part 11 - Planning Scheme Policy 4 - Ecological Impacts.		
	(3) On the mainland, the redevelopment, alteration or addition to an existing development on a lot or premises that is partly or wholly below the flood or storm tide level - (a) is located above the flood or storm tide level; or (b) where required to locate partly below the flood or storm tide level pole design is used; or (c) where required to locate mostly below the flood or storm tide level achieve a finished land level of no greater than the flood or storm tide level for that part of the lot or premises required to site buildings; (d) protects native plants; (e) maintains the flood characteristics of land below the flood or storm tide level by - (i) ensuring the free flow of flood or tidal waters; (ii) not concentrating flood or tidal waters, or intensifying flow velocity on land up or downstream; (iii) not reducing the floodplain storage capacity; (f) maintains visual amenity.		(3) No probable solution identified.

Assessable Development			
Specific Outcomes		**Probable Solutions**	
S2.	Where proposed on a lot or premises shown as Drainage Constrained Land on this overlay map - (1) Uses and other development - (a) minimise adverse impacts associated with overland flow paths, high water table and seepage; (b) achieve legal access through adjoining lots, in the form of an easement, to the development site, where access to the lot or premises is not available, due to the road reserve being drainage constrained.	**P2.**	(1) No probable solution identified. **Note -** ■ A detailed survey and drainage investigation is necessary, in order to accurately identify drainage constraints. ■ A licensed surveyor performs survey work, with all analysis work undertaken by a suitably qualified Registered Professional Engineer of Queensland (RPEQ). All levels should be noted as AHD levels. ■ To assist in performing the survey and drainage investigation, refer to Planning Scheme Policy 7 - Flood Prone, Storm Tide and Drainage Constrained land. ■ Refer to Schedule 6 - Movement Network and Road Design to achieve access requirements.
S3.	Hazardous Materials - Bulk manufacture and storage of hazardous materials takes place above the flood or storm tide level to minimise risk to public safety and the environment.	**P3.**	No probable solution identified.
S4.	Utility Infrastructure - (1) Infrastructure maintains its function during a flood or storm tide event. **Note -** ■ Refer to relevant zone code/s that specify the recommended flood levels for community infrastructure. ■ The use or other development complies with any applicable criteria set out by a Floodplain Management Plan.	**P4.**	(1) Any components of infrastructure that are likely to fail to function or may result in contamination when inundated by flood or storm tide flows, such as electrical switch gear and motors, or water supply pipeline air valves are - (a) located above the flood or storm tide level; or (b) designed and constructed to exclude floodwater intrusion/infiltration; (2) Infrastructure is designed and constructed to resist hydrostatic and hydrodynamic forces as a result of inundation by a flood or storm tide level.

Assessable Development			
Specific Outcomes		**Probable Solutions**	
	Environmental Values -		
S5.	The environmental values of land subject to flood, storm tide or drainage constraints are protected and maintained.	**P5.**	No probable solution is identified. **Note -** ■ A detailed environmental investigation and analysis undertaken by a suitably qualified person is necessary to demonstrate no adverse impacts on environmental values. ■ To assist in performing the environmental investigation, refer to Part 11 - ▸ Planning Scheme Policy 4 - Ecological Impacts; ▸ Planning Scheme Policy 14 - Waterways, Wetlands and Moreton Bay.

this page purposely
left blank

Division 7 - Habitat Protection Overlay

5.7.1 Introduction

(1) This division contains the provisions for the Habitat Protection Overlay. They are -

(a) The Habitat Protection Overlay Tables of Assessment, that incorporates -
- (i) Levels of assessment for development in the Habitat Protection Overlay (section 5.7.2);
- (ii) Assessment criteria for development in the Habitat Protection Overlay (section 5.7.3);
- (iii) Habitat Protection Overlay - Table of Assessment for Material Change of Use of Premises (section 5.7.4);
- (iv) Habitat Protection Overlay - Table of Assessment for Other Development not associated with a Material Change of Use of Premises (section 5.7.5).

(b) The Habitat Protection Overlay Code, that incorporates -
- (i) Compliance with the Habitat Protection Overlay Code (section 5.7.6);
- (ii) Overall Outcomes for the Habitat Protection Overlay Code (section 5.7.7);
- (iii) Acceptable Solutions applicable to Self-Assessable Development (section 5.7.8);
- (iv) Specific Outcomes and Probable Solutions applicable to Assessable Development (section 5.7.9).

5.7.2 Levels of assessment for development affected by the Habitat Protection Overlay

(1) Sections 5.7.4 and 5.7.5 identify the level of assessment for development affected by the Habitat Protection Overlay, as follows -

(a) section 5.7.4 Habitat Protection Overlay - Table of Assessment for Making a Material Change of Use of Premises -
- (i) column 1 identifies uses that are exempt, self-assessable or assessable;
- (ii) column 2 identifies the level of assessment for the uses listed in column 1;
- (iii) where the use is defined in Part 9 - Schedule 3 - Dictionary, Division 1 - Uses and is not listed in column 1 it is exempt;
- (iv) where the use is not defined in Part 9 - Schedule 3 - Dictionary, Division 1 - Uses and is not listed in column 1 it is code assessable.

(b) section 5.7.5 Habitat Protection Overlay - Table of Assessment for Other Development not associated with a Material Change of Use of Premises -
- (i) column 1 identifies other development that is exempt, self-assessable or assessable;
- (ii) column 2 identifies the level of assessment for other development listed in column 1;
- (iii) where the other development is not listed in column 1 it is exempt.

(2) Other overlays may alter the level of assessment identified in 1(a) and (b)[5.31].

Note -

If the use or other development is on a premises that has been created through a reconfiguration approval, since the current RPS version update, the matters for consideration against this Code are deemed to have been addressed. This applies to uses and other development that are listed as self-assessable in the applicable zone code.

[5.31] Refer to Part 5 - Overlays to determine the level of assessment for the use or other development where another overlay affects the lot and Part 1 - section 1.2.5(10)(f) that explains how the highest level of assessment applies.

5.7.3 Assessment criteria for development in the Habitat Protection Overlay

(1) Development affected by the Habitat Protection Overlay is assessed against the assessment criteria listed in column 3 of sections 5.7.4 and 5.7.5, as follows -

(a) acceptable solutions in section 5.7.8 of the Habitat Protection Overlay Code for self-assessable development; or

(b) specific outcomes in section 5.7.9 of the Habitat Protection Overlay Code for assessable development.

(2) Self-assessable development that does not comply with all the acceptable solutions in section 5.7.8 of the Habitat Protection Overlay Code is assessable development.

(3) The assessment criteria in the Habitat Protection Overlay Code are based on one of three scenarios, described within the Code as H1, H2 or H3 areas, as follows -

(a) H1 applies where development is proposed on that part of the lot or premises not shown on the Bushland Habitat Overlay Map or State Koala Policy Overlay Map;

(b) H2 applies where development is proposed on that part of the lot or premises shown on the Bushland Habitat Overlay Map;

(c) H3 applies where development is proposed on that part of the lot or premises shown on the *SEQ Regional Plan 2005 - 2026 - Interim Guideline: Koalas and Development*.

Note -

Outcomes sought by this code relating to the protection of H2 areas or development within a H2 area also apply to development in H3 areas.

5.7.4 Habitat Protection Overlay - Table of Assessment for Material Change of Use of Premises

Habitat Protection Overlay - Table of Assessment for Material Change of Use of Premises

column 1	column 2	column 3
Use[5.32]	**Level of Assessment**[5.33]	**Assessment Criteria**
■ Bulky Goods Showroom ■ Car Wash Facility ■ Commercial Office ■ Display and Sale Activity ■ Funeral Parlour ■ Garden Centre ■ General Industry ■ Health Care Centre ■ Landscape Supply Depot ■ Place of Worship ■ Produce Store ■ Refreshment Establishment ■ Retail Warehouse ■ Service Industry ■ Service Station ■ Shop ■ Vehicle Depot ■ Vehicle Repair Premises ■ Veterinary Surgery ■ Warehouse	Exempt If - (1) A tenancy change only; (2) Involving only minor building work to an existing building Code Assessable If not Exempt	■ Habitat Protection Overlay Code
■ Bed and Breakfast ■ Display Dwelling ■ Dwelling House ■ Home Business ■ Park ■ Relatives Apartment ■ Roadside Stall	Self-Assessable If complying with the assessment criteria being the acceptable solutions listed in column 3 Code Assessable If not self-assessable	■ Acceptable Solutions in section 5.7.8 of the Habitat Protection Overlay Code ■ Habitat Protection Overlay Code
■ Aged Persons and Special Needs Housing ■ Agriculture ■ Airport ■ Animal Keeping ■ Apartment Building ■ Brothel ■ Caretakers Dwelling ■ Child Care Centre ■ Community Facility ■ Drive Through Restaurant ■ Dual Occupancy ■ Education Facility ■ Emergency Services ■ Estate Sales Office	Code Assessable	■ Habitat Protection Overlay Code

■

[5.32] See Part 9 - Schedule 3 - Dictionary, Division 1 - Uses for defined uses.
[5.33] See Part 9 - Schedule 3 - Dictionary, Division 2 - Administrative Terms for a definition of level of assessment.

Habitat Protection Overlay - Table of Assessment for Material Change of Use of Premises

column 1	column 2	column 3
Use[5.32]	**Level of Assessment**[5.33]	**Assessment Criteria**
Continued - ■ Extractive Industry ■ Forestry ■ Heavy Industry ■ Hospital ■ Hotel ■ Indoor Recreation Facility ■ Institution ■ Intensive Agriculture ■ Marine Services ■ Mobile Home Park ■ Multiple Dwelling ■ Night Club ■ Outdoor Dining ■ Outdoor Recreation Facility ■ Passenger Terminal ■ Rural Enterprise ■ Small Lot Housing ■ Telecommunications Facility ■ Temporary Use ■ Tourist Accommodation ■ Tourist Park ■ Utility Installation ■ Vehicle Parking Station	Code Assessable	■ Habitat Protection Overlay Code
Defined uses not listed in column 1	Exempt	
Uses not defined in Part 9 - Schedule 3 - Dictionary, Division 1 - Uses	Code Assessable	■ Habitat Protection Overlay Code

5.7.5 Habitat Protection Overlay - Table of Assessment for Other Development not associated with a Material Change of Use of Premises

Habitat Protection Overlay - Table of Assessment for Other Development

column 1	column 2	column 3
Other Development	**Level of Assessment[5.34]**	**Assessment Criteria**
Reconfiguration for -		
Creating lots by subdividing another lot by Standard Format Plan[5.35]	Code Assessable	■ Habitat Protection Overlay Code
■ Rearranging the boundaries of a lot by registering a plan of subdivision; or ■ Dividing land into parts by Agreement	Code Assessable	■ Habitat Protection Overlay Code
Building Work for -		
■ Domestic Additions ■ Domestic Outbuildings ■ On-site raising or relocation of an existing dwelling unit ■ Private Tennis Court	Self-Assessable If complying with the assessment criteria being the acceptable solutions listed in column 3 Code Assessable If not self-assessable	■ Acceptable Solutions in section 5.7.8 of the Habitat Protection Overlay Code ■ Habitat Protection Overlay Code
Private Swimming Pool	Exempt If minor building work[5.36] Code Assessable If not exempt or self-assessable	■ Habitat Protection Overlay Code
Operational Work for -		
Excavation and Fill	Exempt If - (1) Disturbing less than $50m^3$ of soil; (2) A height/depth not exceeding 300mm measured from ground level Self-Assessable If - (1) Not Exempt; (2) Complying with the assessment criteria being the acceptable solutions	■ Acceptable Solutions in section 5.7.8 of the Habitat Protection Overlay Code

[5.34] See Part 9 - Schedule 3 - Dictionary, Division 2 - Administrative Terms for a definition of level of assessment.
[5.35] Whether or not having a Community Management Statement.
[5.36] See Part 9 - Schedule 3 - Dictionary, Division 2 - Administrative Terms for a definition of minor building work.

Habitat Protection Overlay - Table of Assessment for Other Development

column 1	column 2	column 3
Other Development	**Level of Assessment**[5.34]	**Assessment Criteria**
	listed in column 3 Code Assessable If not self-assessable	■ Habitat Protection Overlay Code
■ Operational Work for Reconfiguring a Lot (by Standard Format Plan) ■ Private Waterfront Structure	Code Assessable	■ Habitat Protection Overlay Code
All other development not listed in column 1	Exempt	

5.7.6 Compliance with the Habitat Protection Overlay Code

(1) Development that is consistent with the following, complies with the Habitat Protection Overlay Code -

(a) acceptable solutions in section 5.7.8 where self-assessable development; or

(b) specific outcomes in section 5.7.9 where assessable development.

Note -

- Planning Scheme Policy 4 - Ecological Impacts will assist in achieving the specific outcomes in the Habitat Protection Overlay Code.
- The planning scheme area is affected by *SEQ Regional Plan 2005 - 2026 - Interim Guideline: Koalas and Development.*

5.7.7 Overall Outcomes of the Habitat Protection Overlay Code

(1) The overall outcomes are the purpose of the Habitat Protection Overlay Code.

(2) The overall outcomes sought for the Habitat Protection Overlay Code are the following -

(a) to ensure uses and other development identify, protect and provide for the long-term management and enhancement of environmental values being -

(i) habitats necessary for the long-term viability of native plants, native animals and ecosystems, whether significant for biodiversity or ecological reasons at the federal, state, regional or local level;

(ii) wetland, coastal, bushland and koala habitats;

(iii) corridors, networks, patches and mosaics of native plants, and all areas where native animals have relatively unimpeded movement when compared to urban areas;

(iv) native animals, native plants and ecosystems, any of which are common (least concern), vulnerable, rare or endangered as defined in the *Nature Conservation Act 1992*;

(v) areas where the re-growth of native plants will support the role of remnant native plants;

(vi) areas where there are opportunities for enhancement of environmental values to occur through re-vegetation.

5.7.8 Acceptable Solutions applicable to Self-Assessable Development

Self-Assessable Development	
Acceptable Solutions	
A1.	(1) Swimming Pool where the plan area of pool and paved area is no greater than 100m^2; or (2) Domestic Additions where - (a) attached to a dwelling and no greater than 200m^2 plan area; or (b) detached from a dwelling and no greater than 60m^2 plan area; or **Note -** Domestic Additions must be substantially attached to a dwelling and not attached through covered or uncovered walkways, carports, patios, decks or similar structures. (3) Domestic Outbuildings where complying with Table 1 of the Domestic Outbuilding Code; or (4) Uses and other development - (a) in H1 are located a - (i) minimum of 100 metres from the Marine Habitat shown on the Bushland Habitat Overlay Map; (ii) a minimum of 60 metres from - a. the Bushland Habitat shown on the Bushland Habitat Overlay Map; b. the Koala Conservation Area or Koala Sustainability Area shown on the State Koala Policy Overlay Map; or (b) in H2 - (i) are only located in the Enhancement Area shown on the Bushland Habitat Overlay Map; (ii) do not result in the removal of native plants from within the lot or premises; (c) are not located in H3; or (5) Uses and other development are located within an approved development envelope.

5.7.9 Specific Outcomes and Probable Solutions applicable to Assessable Development

Assessable Development			
Specific Outcomes		**Probable Solutions**	
	Where proposed on that part of the lot or premises that is H1 - **Note -** H1 applies where development is proposed on that part of the lot or premises **not** shown on the Bushland Habitat Overlay Map or State Koala Policy Overlay Map.		
S1.1	(1) Uses and other development in H1 - (a) use only native plants for re-vegetation and landscaping; (b) control and reduce the impact of weed species on the lot or premises; (c) maximise the use of fauna friendly fencing and removes barriers to wildlife movement across the landscape. **Note -** S1.1(1) applies as a minimum level of requirement over the whole lot or premises.	**P1.1**	(1) Uses and other development - (a) utilise native plants, suitable to the location, that are selected from Schedule 10 - Vegetation Species List for re-vegetation and landscaping; (b) control and remove weed species identified in Schedule 12 - Weed Species list from the lot or premises; (c) no probable solution identified. **Note -** Refer to Planning Scheme Policy 4 - Ecological Impacts for further information on fauna friendly fencing.
S1.2	(1) Uses and other development protect, enhance and manage environmental values in H2 areas by - (a) maximising retention of existing native plants, particularly - (i) koala habitat trees; (ii) native plants that form corridors for movement of native animals; (iii) native plants that are located along fence lines or in stands or small groups; (b) incorporating accessways between roads and the development or roads that - (i) are located and designed to minimise the need for vegetation clearance; (ii) limit vehicle speed to 30kmph; (iii) provide for integrated infrastructure provision; (c) ensuring stormwater run-off is treated and dispersed on-site without adverse impacts to H2 areas; (d) directs noise and artificial light,	**P1.2**	(1) No probable solution identified. **Note -** Refer to Planning Scheme Policy 4 - Ecological Impacts for further information.

Habitat Protection Overlay

Assessable Development			
Specific Outcomes		**Probable Solutions**	
	and access by non-native animals away from Enhancement Link, Enhancement Corridor, Bushland Habitat or Marine Habitat areas as shown on the Bushland Habitat Map within or adjoining the lot or premises; (e) for reconfiguration - including development envelope areas that - (i) do not extend into Bushland Habitat, Enhancement Corridor, Marine Habitat, or where the most suitable location of the Enhancement Link is determined; (ii) are of a sufficient size to contain all aspects of anticipated uses and activities, including building, structures, infrastructure and open space and recreational areas, such as proposed swimming pools and tennis courts.		
S2.	Where proposed on that part of the lot or premises that is partly or wholly within H2 - **Note -** ■ H2 applies where development is proposed on that part of the lot or premises shown on the Bushland Habitat Overlay Map. ■ The outcomes sought by S1.2 and S2.1 relating to the protection of H2 areas or development within a H2 area also apply to development in H3 areas. (1) Uses and other development identify, protect, enhance and secure the long-term management of environmental values in H2 areas of the lot or premises by - (a) incorporating the outcomes detailed in S1.1 and S1.2; (b) locating and designing the development to minimise adverse impacts to H2 areas; (c) ensuring only fauna friendly fencing is used where it extended into H2 areas; (d) where an Enhancement Area occurs on the lot or premises -	**P2.**	(1) No probable solution identified. **Note -** Refer to Planning Scheme Policy 4 - Ecological Impacts for further information.

Assessable Development			
Specific Outcomes		**Probable Solutions**	
	(i) contain all development within this area; (ii) re-establish native vegetation at the rate of 1 tree per 400m^2 in this area to - a. consolidate existing patches or stands of native vegetation to form links between them; b. minimise edge effects on other H2 areas; (e) where an Enhancement Link occurs on the lot or premises provide for wildlife movement by - (i) identifying the most suitable location for the link; (ii) locating development outside the area identified as the link; (iii) identifying habitat trees within the link and maximise their retention; (iv) identifying areas for re-vegetation to enhance the link; (v) maximising opportunities for wildlife movement along the link; (f) where an Enhancement Corridor occurs on the lot or premises - (i) re-vegetate with native plants at a minimum rate of one plant for every 1m^2 of corridor; (ii) in the instance that the corridor is less than 100 metres in width, re-establish native plants to expand the corridor to 100 metres in width; (g) where locating development on that part of the lot or premises shown as Koala Habitat - (i) identify and maximise retention of koala habitat trees; (ii) establish a buffer between development and koala habitat trees to ensure their on-going viability throughout the life of the development; (iii) if development will result in the loss of koala habitat trees, they are replanted at a rate of 1 tree for every 1		

Habitat Protection Overlay

Assessable Development			
Specific Outcomes		**Probable Solutions**	
	metre height of tree lost, with replanting occurring - a. on-site; or b. where a. is not possible - off-site in the local area at a location determined in conjunction with the local government; (h) where locating development on that part of the lot or premises shown as Enhancement Corridor, Bushland Habitat or Marine Habitat - (i) explore all alternatives to locate the development outside these areas; (ii) where (i) is not achievable - a. ecological assessment, and development envelope areas determine the most appropriate location and extent of development in these areas; b. secure the long-term conservation of these areas through covenant or other private or public ownership arrangements; c. maximise opportunities for re-vegetation using native plants outside development areas to enhance the habitat and movement of native animals through the entire lot or premises;		
S3.	Where proposed on that part of the lot or premises that is partly or wholly within H3 - **Note -** H3 applies where development is proposed on that part of the lot or premises shown on the State Koala Policy Overlay Map. (1) Protect, manage and enhance the habitat of koalas.	**P3.**	(1) No probable solution identified. **Note -** It is envisaged that the State Government requirements for achieving koala compatible development will be

Assessable Development			
Specific Outcomes		**Probable Solutions**	
			fully integrated into this planning scheme when the *SEQ Regional Plan 2005 - 2026 - Interim Guideline: Koalas and Developmen*t is superseded by the *Nature Conservation (Koala) Conservation Plan 2005,* once finalised. Until that time the *SEQ Regional Plan 2005 - 2026 - Interim Guideline: Koalas and Development* or its successor, sets the criteria for uses or other development to achieve compliance with this planning scheme. Within the Emerging Urban Community Zone at Kinross Road, Thornlands, the local government, in collaboration with Environmental Protection Agency, will seek to further refine areas currently mapped as Koala Sustainability Areas under the *SEQ Regional Plan 2005 - 2026 - Interim Guidelines: Koalas and Development.*

this page purposely
left blank

Division 8 - Heritage Place and Character Precinct Overlay

5.8.1 Introduction

(1) This division contains the provisions for the Heritage Place and Character Precinct Overlay. They are -

(a) The Heritage Place and Character Precinct Overlay Tables of Assessment, that incorporates -
- (i) Levels of assessment for development in the Heritage Place and Character Precinct Overlay (section 5.8.2);
- (ii) Assessment criteria for development in the Heritage Place and Character Precinct Overlay (section 5.8.3);
- (iii) Heritage Place and Character Precinct Overlay - Table of Assessment for Material Change of Use of Premises (section 5.8.4);
- (iv) Heritage Place and Character Precinct Overlay - Table of Assessment for Other Development not associated with a Material Change of Use of Premises (section 5.8.5).

(b) The Heritage Place and Character Precinct Overlay Code, that incorporates -
- (i) Compliance with the Heritage Place and Character Precinct Overlay Code (section 5.8.6);
- (ii) Overall Outcomes for the Heritage Place and Character Precinct Overlay Code (section 5.8.7);
- (iii) Specific Outcomes and Probable Solutions applicable to Assessable Development (section 5.8.8).

5.8.2 Levels of assessment for development affected by the Heritage Place and Character Precinct Overlay

(1) Sections 5.8.4 and 5.8.5 identify the level of assessment for development affected by the Heritage Place and Character Precinct Overlay, as follows -

(a) section 5.8.4 Heritage Place and Character Precinct Overlay - Table of Assessment for Making a Material Change of Use of Premises -
- (i) column 1 identifies uses that are exempt or assessable;
- (ii) column 2 identifies the level of assessment for the uses listed in column 1;
- (iii) where the use is defined in Part 9 - Schedule 3 - Dictionary, Division 1 - Uses and is not listed in column 1 it is exempt;
- (iv) where the use is not defined in Schedule 3 - Dictionary, Division 1 - Uses and is not listed in column 1 it is code assessable.

(b) section 5.8.5 Heritage Place and Character Precinct Overlay - Table of Assessment for Other Development not associated with a Material Change of Use of Premises -
- (i) column 1 identifies other development that is exempt or assessable;
- (ii) column 2 identifies the level of assessment for other development listed in column 1;
- (iii) where the other development is not listed in column 1 it is exempt.

(2) Other overlays may alter the level of assessment identified in 1(a) and 1(b)[5.37].

5.8.3 Assessment criteria for development in the Heritage Place and Character Precinct Overlay

(1) Development affected by the Heritage Place and Precinct Overlay is assessed against the assessment criteria listed in column 3 of sections 5.8.4 and 5.8.5, being the specific outcomes in section 5.5.8 of the Heritage Place and Character Precinct Overlay Code for assessable development.

[5.37] Refer to Part 5 - Overlays to determine the level of assessment for the use or other development where another overlay affects the lot and Part 1, section 1.2.5(10)(f) that explains how the highest level of assessment applies.

5.8.4 Heritage Place and Character Precinct Overlay - Table of Assessment for Material Change of Use of Premises

Heritage Place and Character Precinct Overlay -
Table of Assessment for Material Change of Use of Premises

column 1	column 2	column 3
Use[5.38]	**Level of Assessment**[5.39]	**Assessment Criteria**
■ Aged Persons and Special Needs Housing ■ Agriculture ■ Airport ■ Animal Keeping ■ Apartment Building ■ Bed and Breakfast ■ Brothel ■ Bulky Goods Showroom ■ Caretakers Dwelling ■ Car Wash Facility ■ Cemetery ■ Child Care Centre ■ Commercial Office ■ Community Facility ■ Display and Sale Activity ■ Display Dwelling ■ Drive Through Restaurant ■ Dual Occupancy ■ Dwelling House ■ Education Facility ■ Emergency Service ■ Estate Sales Office ■ Extractive Industry ■ Forestry ■ Funeral Parlour ■ Garden Centre ■ General Industry ■ Health Care Centre ■ Heavy Industry ■ Home Business ■ Hospital ■ Hotel ■ Indoor Recreation Facility ■ Institution ■ Intensive Agriculture ■ Landscape Supply Depot ■ Marine Services ■ Minor Utility ■ Mobile Home Park ■ Multiple Dwelling ■ Night Club ■ Outdoor Dining	Code Assessable	■ Heritage Place and Character Precinct Overlay Code

[5.38] See Part 9 - Schedule 3 - Dictionary, Division 1 - Uses for defined uses.
[5.39] See Part 9 - Schedule 3 - Dictionary, Division 2 - Administrative Terms for a definition of level of assessment.

Heritage Place and Character Precinct Overlay - Table of Assessment for Material Change of Use of Premises

column 1	column 2	column 3
Use[5.38]	**Level of Assessment**[5.39]	**Assessment Criteria**
Continued - ■ Outdoor Recreation Facility ■ Park ■ Passenger Terminal ■ Place of Worship ■ Produce Store ■ Refreshment Establishment ■ Relatives Apartment ■ Retail Warehouse ■ Road ■ Roadside Stall ■ Rural Enterprise ■ Service Industry ■ Service Station ■ Shop ■ Small Lot House ■ Telecommunications Facility ■ Temporary Use ■ Tourist Accommodation ■ Tourist Park ■ Utility Installation ■ Vehicle Depot ■ Vehicle Parking Station ■ Vehicle Repair Premises ■ Veterinary Surgery ■ Warehouse	Code Assessable	■ Heritage Place and Character Precinct Overlay Code
Defined uses not listed in column 1	Exempt	
Uses not defined in Part 9 - Schedule 3 - Dictionary, Division 1 - Uses	Code Assessable	■ Heritage Place and Character Precinct Overlay Code

5.8.5 Heritage Place and Character Precinct Overlay - Table of Assessment for Other Development not associated with a Material Change of Use of Premises

Heritage Place and Character Precinct Overlay - Table of Assessment for Other Development

column 1	column 2	column 3
Other Development	**Level of Assessment[5.40]**	**Assessment Criteria**
Reconfiguration for -		
Creating lots by subdividing another lot by Standard Format Plan[5.41]	Code Assessable	■ Heritage Place and Character Precinct Overlay Code
Building Work for -		
Domestic Additions	Exempt If minor heritage building work[5.42] Code Assessable If not exempt	■ Heritage Place and Character Precinct Overlay Code
On-site raising or relocation of an existing dwelling unit	Code Assessable	■ Heritage Place and Character Precinct Overlay Code
Operational Work for -		
Excavation and Fill	Exempt If - (1) Disturbing less than $50m^3$ of soil; (2) A height/depth not exceeding 300mm measured from ground level Code Assessable If not Exempt	■ Heritage Place and Character Precinct Overlay Code
Operational Work for Reconfiguring a Lot (by Standard Format Plan)	Code Assessable	■ Heritage Place and Character Precinct Overlay Code
All other development not listed in column 1	Exempt	

[5.40] See Part 9 - Schedule 3 - Dictionary, Division 2 - Administrative Terms for a definition of level of assessment.
[5.41] Whether or not having a Community Management Statement.
[5.42] See Schedule 3 - Dictionary, Division 2 - Administration Terms for a definition of minor heritage building work.

5.8.6 Compliance with the Heritage Place and Character Precinct Code

(1) Development that is consistent with the specific outcomes in section 5.8.9 complies with the Heritage Place and Character Precinct Overlay Code.

5.8.7 Overall Outcomes of the Heritage Place and Character Precinct Code

(1) The overall outcomes are the purpose of the Heritage Place and Character Precinct Code.

(2) The overall outcomes sought for the Heritage Place and Character Precinct Code are the following -

(a) to recognise and conserve heritage places and ensure uses and other development do not detract from the cultural heritage values of such places;

(b) to ensure uses and other development on lands adjoining or in the vicinity of a State Listed heritage place retain or enhance the heritage, streetscape and character values of the heritage place;

(c) to ensure uses and other development in a character precinct are sympathetic and complementary to the character and heritage values of the precinct.

5.8.8 Specific Outcomes and Probable Solutions applicable to Assessable Development

Assessable Development			
Specific Outcomes		**Probable Solutions**	
	Where on a lot or premises shown on this overlay map as a Heritage Place and listed as local significance in Part 9 - Schedule 4 - Heritage Places Register -		
S1.	(1) The heritage place is conserved in a manner that - (a) is sympathetic and respectful to the character, appearance and setting of the place; (b) incorporates ongoing care and management of the place, by retaining the place;	**P1.**	(1) No probable solution identified; **Note -** Where the Heritage Place is identified in Part 9 - Schedule 4 - Heritage Place Register as State significance, it may require additional approvals under - ■ Section 35 of the *Queensland Heritage Act 1992*; ■ *Cultural Record (Landscapes Queensland and Queensland Estate) Act 1987*; or ■ Commonwealth legislation including but not necessarily limited to the *Australian Heritage Commission Act 1975*.
	(2) Restoration and renovation of the heritage place is sympathetic and respectful to the character, appearance and setting of the place;		(2) No probable solution identified.
	(3) Extension to the heritage place - (a) is of a similar bulk, scale and height of the existing place and utilises similar materials, windows and finishes; (b) ensures mechanical plant and associated facilities or infrastructure do not adversely impact on the appearance of the place. **Note -** Refer to - ■ The Burra Charter, otherwise known as *The Australia ICOMOS Charter for the Conservation of Places of Cultural Significance*; ■ Diagram 1 for examples of minor heritage building work and Diagram 2 for sympathetic extensions.		(3) No probable solution identified.

Assessable Development			
Specific Outcomes		**Probable Solutions**	
S2.	Where on a lot or premises shown on this overlay map as adjoining a State Listed Heritage Place - (1) Uses and other development are designed and carried out so as - (a) not to obscure the appearance or prominence of the listed place from surrounding streets or public places; (b) not to intrude into important vistas of the listed place; (c) not site buildings and structures are between a listed place and its primary or secondary street frontage; (d) to ensure new buildings or structures are setback from the primary street frontage and are of a height, bulk and scale which retains the visual prominence and cultural heritage values of the listed place; (e) minimise disturbance to the original fabric of the listed place; (2) Where for reconfiguration or the opening or closure of a road, development does not detract from the visual attributes of the heritage place or the historical significance of the established street pattern.	**P2.**	(1) No probable solution identified; **Note -** Where the Heritage Place is identified in Part 9 - Schedule 4 - Heritage Place Register as State significance, it may require additional approvals under - ■ Section 35 of the *Queensland Heritage Act 1992*; ■ *Cultural Record (Landscapes Queensland and Queensland Estate) Act 1987*; or ■ Commonwealth legislation including but not necessarily limited to the *Australian Heritage Commission Act 1975*. (2) No probable solution identified.
S3.	Where on a lot or premises shown on this overlay map as being in a Character Precinct - (1) Uses and other development respect and complement the visual and streetscape character of heritage places in the precinct by - (a) utilising similar or complementary roof design and pitches, materials, articulation, windows, finishes and ornamentation; (b) making provision for access to a site in a manner similar, in terms of location, width and design, to that prevalent in the street.	**P3.**	(1) No probable solution identified. **Note -** Refer to Diagram 1, 2 and 3 for examples.

Diagram 1 - Examples of Minor Heritage Building Work

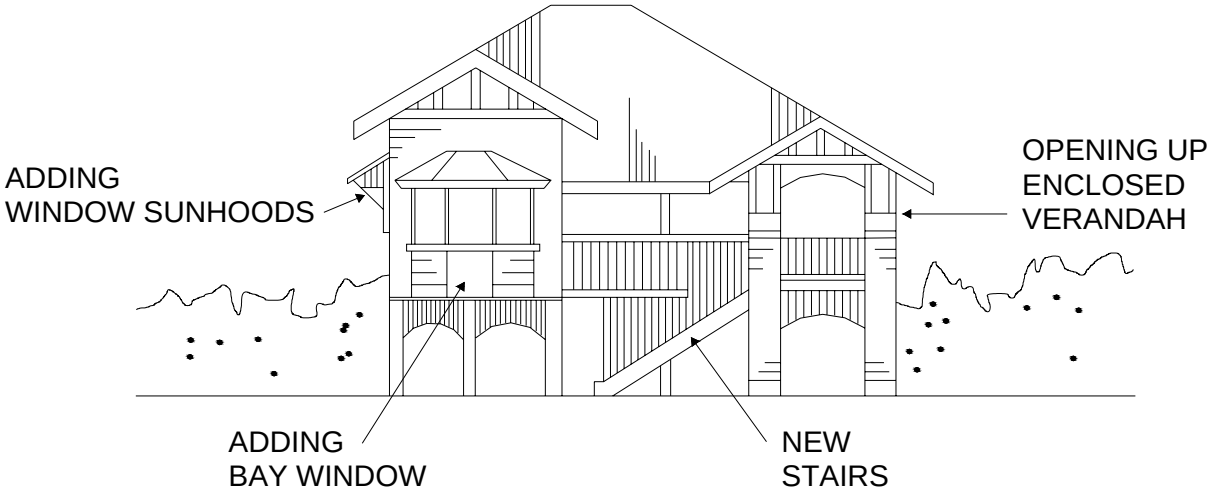

Diagram 2 - Example of addition at the rear of the building

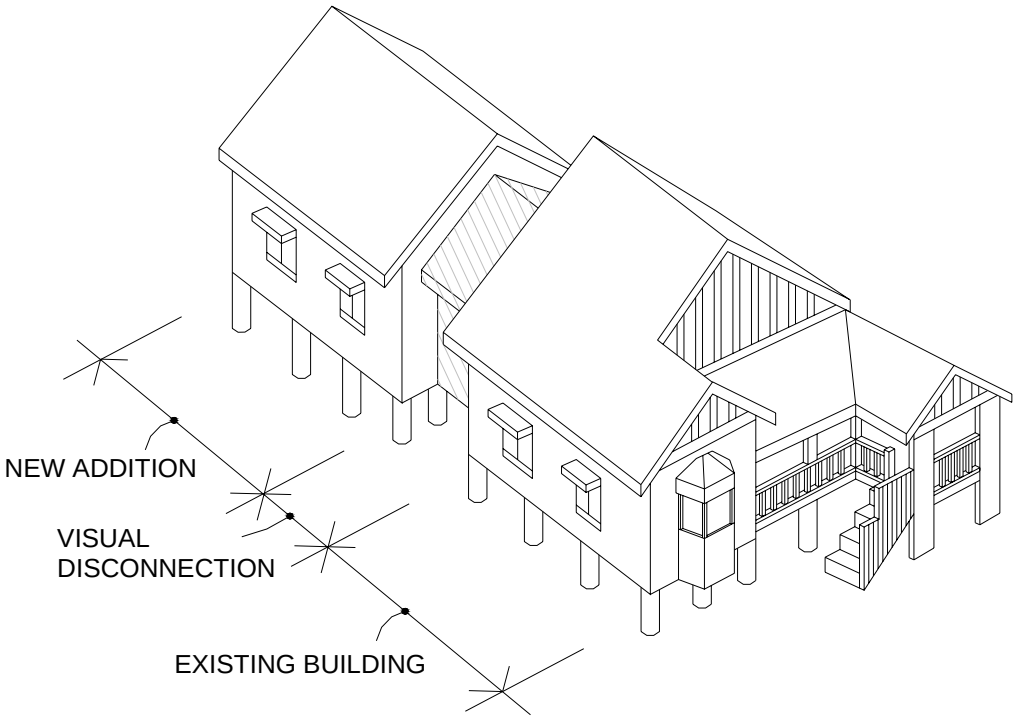

Diagram 3 - Example of development that compliments the existing streetscape

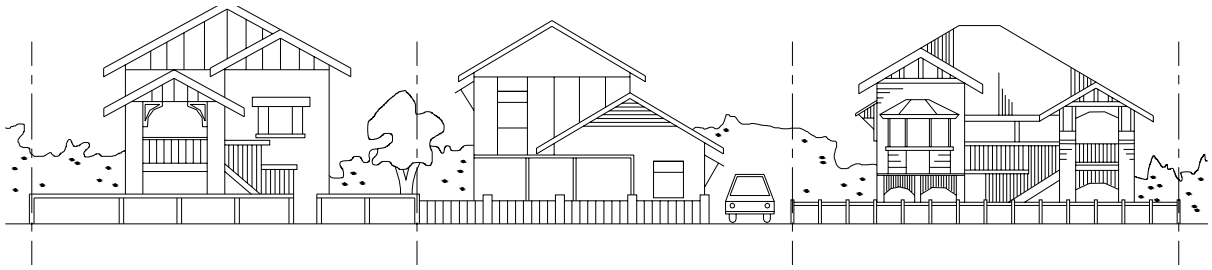

Division 9 - Protection of the Poultry Industry Overlay

5.9.1 Introduction

(1) This division contains the provisions for the Protection of the Poultry Industry Overlay. They are -

(a) The Protection of the Poultry Industry Overlay Tables of Assessment, that incorporates -
- (i) Levels of assessment for development in the Protection of the Poultry Industry Overlay (section 5.9.2);
- (ii) Assessment criteria for development in the Protection of the Poultry Industry Overlay (section 5.9.3);
- (iii) Protection of the Poultry Industry Overlay - Table of Assessment for Material Change of Use of Premises (section 5.9.4);
- (iv) Protection of the Poultry Industry Overlay - Table of Assessment for Other Development not associated with a Material Change of Use of Premises (section 5.9.5).

(b) The Protection of the Poultry Industry Overlay Code, that incorporates -
- (i) Compliance with the Protection of the Poultry Industry Overlay Code (section 5.9.6);
- (ii) Overall Outcomes for the Protection of the Poultry Industry Overlay Code (section 5.9.7);
- (iii) Acceptable Solutions applicable to Self-Assessable Development (section 5.9.8);
- (iv) Specific Outcomes and Probable Solutions applicable to Assessable Development (section 5.9.9).

5.9.2 Levels of assessment for development affected by the Protection of the Poultry Industry Overlay

(1) Sections 5.9.4 and 5.9.5 identify the level of assessment for development affected by the Protection of the Poultry Industry Overlay, as follows -

(a) section 5.9.4 Protection of the Poultry Industry Overlay - Table of Assessment for Making a Material Change of Use of Premises -
- (i) column 1 identifies uses that are exempt, self-assessable or assessable;
- (ii) column 2 identifies the level of assessment for the uses listed in column 1;
- (iii) where the use is defined in Part 9 - Schedule 3 - Dictionary, Division 1 - Uses and is not listed in column 1 it is exempt;
- (iv) where the use is not defined in Part 9 - Schedule 3 - Dictionary, Division 1 - Uses and is not listed in column 1 it is code assessable.

(b) section 5.9.5 Protection of the Poultry Industry Overlay - Table of Assessment for Other Development not associated with a Material Change of Use of Premises -
- (i) column 1 identifies other development that is exempt, self-assessable or assessable;
- (ii) column 2 identifies the level of assessment for other development listed in column 1;
- (iii) where the other development is not listed in column 1 it is exempt.

(2) Other overlays may alter the level of assessment identified in 1(a) and (b)[5.43].

Note -

If the use or other development is on a premises that has been created through a reconfiguration approval, since the current RPS version update, the matters for consideration against this Code are deemed to have been addressed. This applies to uses and other development that are listed as self-assessable in the applicable zone code.

[5.43] Refer to Part 5 - Overlays to determine the level of assessment for the use or other development where another overlay affects the lot and Part 1, section 1.2.5(10)(f) that explains how the highest level of assessment applies.

5.9.3 Assessment criteria for development in the Protection of the Poultry Industry Overlay

(1) Development affected by the Protection of the Poultry Industry Overlay is assessed against the assessment criteria listed in column 3 of sections 5.9.4 and 5.9.5 as follows -

(a) acceptable solutions in section 5.9.8 of the Protection of the Poultry Industry Overlay Code for self-assessable development; or

(b) specific outcomes in section 5.8.9 of the Protection of the Poultry Industry Overlay Code for assessable development.

(2) Self-assessable development that does not comply with all the acceptable solutions in section 5.9.8 of the Protection of the Poultry Industry Overlay Code is assessable development.

5.9.4 Protection of the Poultry Industry Overlay - Table of Assessment for Material Change of Use of Premises

Protection of the Poultry Industry Overlay -
Table of Assessment for Material Change of Use of Premises

column 1	column 2	column 3
Use[5.44]	**Level of Assessment**[5.45]	**Assessment Criteria**
■ Aged Persons and Special Needs Housing ■ Apartment Building ■ Bed and Breakfast ■ Brothel ■ Caretakers Dwelling ■ Child Care Centre ■ Community Facility ■ Drive Through Restaurant ■ Dual Occupancy ■ Dwelling House ■ Education Facility ■ Health Care Centre ■ Home Business ■ Hospital ■ Hotel ■ Indoor Recreation Facility ■ Institution ■ Mobile Home Park ■ Multiple Dwelling ■ Outdoor Dining ■ Outdoor Recreation Facility ■ Place of Worship ■ Refreshment Establishment ■ Relatives Apartment ■ Small Lot House ■ Tourist Accommodation ■ Tourist Park	Self-Assessable If complying with the assessment criteria being the acceptable solutions listed in column 3 Code Assessable If not self-assessable	■ Acceptable Solutions in section 5.9.8 of the Protection of the Poultry Industry Overlay Code ■ Protection of the Poultry Industry Overlay Code
Defined uses not listed in column 1	Exempt	
Uses not defined in Part 9 - Schedule 3 - Dictionary, Division 1 - Uses	Code Assessable	■ Protection of the Poultry Industry Overlay Code

[5.44] See Part 9 - Schedule 3 - Dictionary, Division 1 - Uses for defined uses.
[5.45] See Part 9 - Schedule 3 - Dictionary, Division 2 - Administrative Terms for a definition of level of assessment.

5.9.5 Protection of the Poultry Industry Overlay - Table of Assessment for Other Development not associated with a Material Change of Use of Premises

Protection of the Poultry Industry Overlay - Table of Assessment for Other Development

column 1	column 2	column 3
Other Development	**Level of Assessment**[5.46]	**Assessment Criteria**
Reconfiguration for -		
Creating lots by subdividing another lot by Standard Format Plan[5.47]	Code Assessable	■ Protection of the Poultry Industry Overlay Code
■ Rearranging the boundaries of a lot by registering a plan of subdivision; or ■ Dividing land into parts by Agreement; or ■ Creating an easement giving access to a lot from a constructed road	Code Assessable	■ Protection of the Poultry Industry Overlay Code
Building Work for -		
■ Domestic Additions ■ On-site raising or relocation of an existing dwelling unit	Self-Assessable If complying with the assessment criteria being the acceptable solutions listed in column 3 Code Assessable If not self-assessable	■ Acceptable Solutions in section 5.9.8 of the Protection of the Poultry Industry Overlay Code ■ Protection of the Poultry Industry Overlay Code
Operational Work for -		
Operational Work for Reconfiguring a Lot (by Standard Format Plan)	Code Assessable	■ Protection of the Poultry Industry Overlay Code
All other development not listed in column 1	Exempt	

[5.46] See Part 9 - Schedule 3 - Dictionary, Division 2 - Administrative Terms for a definition of level of assessment.
[5.47] Whether or not having a Community Management Statement.

5.9.6 Compliance with the Protection of the Poultry Industry Overlay Code

(1) Development that is consistent with the following complies with the Protection of the Poultry Industry Overlay Code -

(a) acceptable solutions in section 5.9.8 where self-assessable development; or

(b) specific outcomes in section 5.9.9 where assessable development.

Note -

Planning Scheme Policy 5 - Environmental Emissions will assist in achieving specific outcomes within the Protection of the Poultry Industry Overlay Code.

5.9.7 Overall Outcomes of the Protection of the Poultry Industry Overlay Code

(1) The overall outcomes are the purpose of the Protection of the Poultry Industry Overlay Code.

(2) The overall outcomes sought for the Protection of the Poultry Industry Overlay Code are the following -

(a) to protect the ongoing operation of the poultry industry from uses that are sensitive to its operations;

(b) to ensure uses and other development are sited and designed to ameliorate odour impacts generated by the poultry industry.

5.9.8 Acceptable Solutions applicable to Self-Assessable Development

Self-Assessable Development	
Acceptable Solutions	
A1.	(1) Uses and other development are located on that part of a lot or premises **not** shown on this overlay map.

5.9.9 Specific Outcomes and Probable Solutions applicable to Assessable Development

Assessable Development			
Specific Outcomes		**Probable Solutions**	
S1.1	(1) Development does not impact on the current operation or future expansion of the poultry industry by ensuring - (a) reconfiguration does not result in the creation of additional residential lots in the poultry buffer as shown on this overlay map; or (b) uses that increase the number of people living or congregating, other than a dwelling house on an existing lot, are not established in the poultry buffer as shown on this overlay map.	**P1.1**	(1) No probable solution identified.
S1.2	(1) Uses and other development ameliorate odour nuisance by - (a) being sited to minimise impacts through distance, layout, orientation and location in relation to prevailing breezes; (b) design and construction techniques; (c) incorporating additional measures, such as - (i) vegetated buffers; (ii) vegetated earth mounds.	**P1.2**	(1) No probable solution identified.

Division 10 - Road and Rail Noise Impacts Overlay

5.10.1 Introduction

(1) This division contains the provisions for the Road and Rail Noise Impacts Overlay. They are -

(a) The Road and Rail Noise Impacts Overlay Tables of Assessment, that incorporates -
- (i) Levels of assessment for development in the Road and Rail Noise Impacts Overlay (section 5.10.2);
- (ii) Assessment criteria for development in the Road and Rail Noise Impacts Overlay (section 5.10.3);
- (iii) Road and Rail Noise Impacts Overlay - Table of Assessment for Material Change of Use of Premises (section 5.10.4);
- (iv) Road and Rail Noise Impacts Overlay - Table of Assessment for Other Development not associated with a Material Change of Use of Premises (section 5.10.5).

(b) The Road and Rail Noise Impacts Overlay Code, that incorporates -
- (i) Compliance with the Road and Rail Noise Impacts Overlay Code (section 5.10.6);
- (ii) Overall Outcomes for the Road and Rail Noise Impacts Overlay Code (section 5.10.7);
- (iii) Acceptable Solutions applicable to Self-Assessable Development (section 5.10.8);
- (iv) Specific Outcomes and Probable Solutions applicable to Assessable Development (section 5.10.9).

5.10.2 Levels of assessment for development affected by the Road and Rail Noise Impacts Overlay

(1) Sections 5.10.4 and 5.10.5 identify the level of assessment for development affected by the Road and Rail Noise Impacts Overlay, as follows -

(a) section 5.10.4 Road and Rail Noise Impacts Overlay - Table of Assessment for Making a Material Change of Use of Premises -
- (i) column 1 identifies uses that are exempt, self-assessable or assessable;
- (ii) column 2 identifies the level of assessment for the uses listed in column 1;
- (iii) where the use is defined in Schedule 3 - Dictionary, Division 1 - Uses and is not listed in column 1 it is exempt;
- (iv) where the use is not defined in Schedule 3 - Dictionary, Division 1 - Uses and is not listed in column 1 it is code assessable.

(b) section 5.10.5 Road and Rail Noise Impacts Overlay - Table of Assessment for Other Development not associated with a Material Change of Use of Premises -
- (i) column 1 identifies other development that is exempt, self-assessable or assessable;
- (ii) column 2 identifies the level of assessment for other development listed in column 1;
- (iii) where the other development is not listed in column 1 it is exempt.

(2) Other overlays may alter the level of assessment identified in 1(a) and (b)[5.48].

Note -

If the use or other development is on a premises that has been created through a reconfiguration approval, since the current RPS version update, the matters for consideration against this Code are deemed to have been addressed. This applies to uses and other development that are listed as self-assessable in the applicable zone code.

[5.48] Refer to Part 5 – Overlays to determine the level of assessment for the use or other development where another overlay affects the lot and Part 1, section 1.2.5(10)(f) that explains how the highest level of assessment applies.

5.10.3 Assessment criteria for development in the Road and Rail Noise Impacts Overlay

(1) Development affected by the Road and Rail Noise Impacts Overlay is assessed against the assessment criteria listed in column 3 of sections 5.10.4 and 5.10.5 as follows -

(a) acceptable solutions in section 5.10.8 of the Road and Rail Noise Impacts Overlay Code for self-assessable development; or

(b) specific outcomes in section 5.10.9 of the Road and Rail Noise Impacts Overlay Code for assessable development.

(2) Self-assessable development that does not comply with all the acceptable solutions in section 5.10.8 of the Road and Rail Noise Impacts Overlay Code is assessable development.

5.10.4 Road and Rail Noise Impacts Overlay - Table of Assessment for Material Change of Use of Premises

Road and Rail Noise Impacts Overlay -
Table of Assessment for Material Change of Use of Premises

column 1	column 2	column 3
Use[5.49]	**Level of Assessment**[5.50]	**Assessment Criteria**
■ Aged Persons and Special Needs Housing ■ Apartment Building ■ Bed and Breakfast ■ Caretakers Dwelling ■ Child Care Centre ■ Community Facility ■ Display Dwelling ■ Dual Occupancy ■ Dwelling House ■ Education Facility ■ Home Business ■ Hospital ■ Institution ■ Mobile Home Park ■ Multiple Dwelling ■ Place of Worship ■ Relatives Apartment ■ Small Lot House ■ Tourist Accommodation	Self-Assessable If complying with the assessment criteria being the acceptable solutions listed in column 3 Code Assessable If not self-assessable	■ Acceptable Solutions in section 5.10.8 of the Road and Rail Noise Impacts Overlay Code ■ Road and Rail Noise Impacts Overlay Code
Defined uses not listed in column 1	Exempt	
Uses not defined in Part 9 - Schedule 3 - Dictionary, Division 1 - Uses	Code Assessable	■ Road and Rail Noise Impacts Overlay Code

[5.49] See Schedule 3 - Dictionary, Division 1 - Uses for defined uses.
[5.50] See Schedule 3 - Dictionary, Division 2 - Administrative Terms for a definition of level of assessment.

5.10.5 Road and Rail Noise Impacts Overlay - Table of Assessment for Other Development not associated with a Material Change of Use of Premises

Road and Rail Noise Impacts Overlay - Table of Assessment for Other Development

column 1	column 2	column 3
Other Development	**Level of Assessment**[5.51]	**Assessment Criteria**
Reconfiguration for -		
■ Creating lots by subdividing another lot by Standard Format Plan[5.52] ■ Rearranging the boundaries of a lot by registering a plan of subdivision	Code Assessable	■ Road and Rail Noise Impacts Overlay Code
Building Work for -		
■ Domestic Additions	Exempt If building work does not include habitable bedrooms Self-assessable If complying with the assessment criteria being the acceptable solutions listed in column 3 Code Assessable If not self-assessable	■ Acceptable Solutions in section 5.10.8 of the Road and Rail Noise Impacts Overlay Code ■ Road and Rail Noise Impacts Overlay Code
■ On-site raising or relocation of an existing dwelling unit	Exempt If on-site raising only Self-assessable If complying with the assessment criteria being the acceptable solutions listed in column 3 Code Assessable If not self-assessable	■ Acceptable Solutions in section 5.10.8 of the Road and Rail Noise Impacts Overlay Code ■ Road and Rail Noise Impacts Overlay Code
All other development not listed in column 1	Exempt	

[5.51] See Schedule 3 - Dictionary, Division 2 - Administrative Terms for a definition of level of assessment.
[5.52] Whether or not having a Community Management Statement.

5.10.6 Compliance with the Road and Rail Noise Impacts Overlay Code

(1) Development that is consistent with the following complies with the Road and Rail Noise Impacts Overlay Code -

(a) acceptable solutions in section 5.10.8 where self-assessable development; or

(b) specific outcomes in section 5.10.9 where assessable development.

Note -

Planning Scheme Policy 5 - Environmental Emissions will assist in achieving specific outcomes within the Road and Rail Noise Impacts Overlay Code.

5.10.7 Overall Outcomes of the Road and Rail Noise Impacts Overlay Code

(1) The overall outcomes are the purpose of the Road and Rail Noise Impacts Overlay Code.

(2) The overall outcome sought for the Road and Rail Noise Impacts Overlay Code is the following -

(a) to ensure uses and other development -

(i) are sited and designed to minimise adverse impacts of noise generated by the road and rail movement network;

(ii) achieve an acceptable noise level for sensitive land uses;

(iii) integrate noise attenuation measures that protect the amenity of the streetscape and landscape setting;

(iv) protect the function of road and rail corridors.

5.10.8 Acceptable Solutions applicable to Self-Assessable Development

Self-Assessable Development	
Acceptable Solutions	
A1.	(1) Uses and other development are located - (a) on an internal lot that has an accessway greater than 100 metres in length; or (b) on that part of the lot or premises not shown on this overlay map.

5.10.9 Specific Outcomes and Probable Solutions applicable to Assessable Developm ent

Assessable Development			
Specific Outcomes		**Probable Solutions**	
S1.1	(1) For reconfiguration, other than subdividing one lot into two, reduce noise nuisance through providing - (a) a buffer between lots and the noise source; or (b) service roads between lots and the noise source; or (c) larger lots closest to the noise source that allow dwelling units to be set back from the noise source; or (d) incorporating mounding and landscaping into the reconfiguration design; or (e) a mixture of (a) - (d).	**P1.1**	(1) Road and lot layout has regard to the future siting of sensitive receiving environments, that are expected on the lots created, by complying with noise levels for the end uses detailed in - (a) Table 1 - Road Design Level Noise Criteria; or (b) Table 2 - Rail Design Level Noise Criteria.
S1.2	(1) Uses reduce noise nuisance by - (a) siting to minimise the impact through distance, layout and orientation; (b) design and construction techniques; (c) incorporating soft engineering measures, such as - (i) vegetated buffers; (ii) vegetated earth mounds; or (d) fencing where it can be demonstrated that (a), (b) or (c) can not be implemented; and (e) a combination of (a), (b), (c) or (d).	**P1.2**	(1) Uses - (a) are capable of achieving noise levels within all buildings and structures in accordance with *Australian Standard 3671- 1989: Acoustics - Road Traffic Noise Intrusion - Building Siting and Construction*; (b) utilise siting, design and construction techniques to comply with noise levels detailed in - (i) Table 1 - Road Design Level Noise Criteria; or (ii) Table 2 - Rail Design Level Noise Criteria.
S1.3	(1) Noise attenuation measures utilised - (a) do not restrict access or movement for people or native animals; (b) are integrated with the streetscape and landscape setting; (c) are designed and constructed for longevity and a low level of maintenance.	**P1.3**	(1) No probable solution identified. **Notes -** ■ *Australian Standard 3671:1989 - Acoustics - Road Traffic Noise Intrusion - Building Siting and Construction* details siting, design and construction solutions; ■ Refer to Part 11 - Planning Scheme Policy 5 - Environmental Emissions to assist in achieving the specific outcomes and Table 1. ■ Acoustic fencing is the least preferred noise attenuation measure and is only used to supplement other measures and is to be of a low maintenance design. (2) Maintenance contributions are payable where acoustic fencing and landscaping is incorporated in a reconfiguration design.

Table 1 - Road Design Level Noise Criteria

Measurement Location	Design Level Noise Criteria - See Notes
For - Aged Persons and Special Needs Housing, Apartment Building, Bed and Breakfast, Display Dwelling, Dual Occupancy, Dwelling House, Mobile Home Park, Multiple Dwelling or Small Lot House	
1 metre in front of the building facade to a habitable room[1] at a height corresponding to 1.5 metres above the finished floor level ***These measures do not apply to upper levels. See Notes***	For a State-controlled road - (1) Comply with the external noise criteria specified in Section B6 of the *Road Traffic Noise Management Code of Practice* (Queensland Department of Main Roads) - (a) 63 dB(A) $L_{A10(18hour)}$ or less, where the $L_{A90(8\ hour)}$ between 10pm and 6am is greater than 40 dB(A); or (b) 60 dB(A) $L_{A10(18hour)}$ or less, where the $L_{A90(8\ hour)}$ between 10pm and 6am is less than or equal to 40 dB(A). For all other roads - (1) Comply with Schedule 1 of the *Environmental Protection (Noise) Policy 1997* - (a) 63 dB(A) assessed as the $L_{A10(18\ hour)}$ level; (b) 60 dB(A) assessed as the highest 1 hour equivalent continuous A-weighted sound pressure level between 10.00pm and 6.00am; (c) 80 dB(A)assessed as a single event maximum sound pressure level.
Inside bedrooms of a proposed dwelling unit[1]	(1) Average $L_{Amax\ (10pm\text{-}6am)}$ not greater than 50 dB(A); (2) $L_{Aeq(1hr)(10pm\text{-}6am)}$ - not greater than 35 dB(A)
Inside living rooms of a proposed dwelling unit[1]	(1) $L_{Aeq(1hr)(6am\text{-}10pm)}$ - not greater than 40 dB(A)
At the private open space area of the dwelling unit[1]	(1) $L_{Aeq(1hr)(6am\text{-}10pm)}$ not greater than 55 dB(A)
Balance of external site area, excluding private open space area and identified setback or buffer area	(1) 63 dB(A) assessed as the L10(18 hour) level
For - Community Facility, Education Facility, Child Care Centre, Commercial uses, Industrial uses, Institution or Place of Worship	
Inside common areas of buildings associated with the use	(1) In accordance with the recommended design sound levels specified in Table 1 of the *Australian Standard 2107 - 2000: Acoustics - Recommended Design Sound Level and Reverberation Time for Building Interiors.*

Table 2 - Rail Design Level Noise Criteria

Measurement Location	Design Level Noise Criteria - see Notes
For - Aged Persons and Special Needs Housing, Apartment Building, Bed and Breakfast, Display Dwelling, Dual Occupancy, Dwelling House, Mobile Home Park, Multiple Dwelling or Small Lot House	
1 metre in front the building facade to a habitable room[1] at a height corresponding to 1.5 metres above the finished floor level ***These measures do not apply to upper levels. See Notes***	(1) In accordance with Schedule 1 - Planning Levels, Section 3 - Railways of the *Environmental Protection (Noise) Policy 1997* - (a) 65 dB(A), assessed as the 24 hour average equivalent continuous A-weighted sound pressure level; (b) 87 dB(A) assessed as a single event maximum sound pressure level.
Inside bedrooms of a proposed dwelling unit[1]	(1) Average $L_{Amax(10pm-6am)}$ not greater than 50 dB(A)
Inside living rooms of a proposed dwelling unit[1]	(1) Average $L_{Amax(10pm-6am)}$ not greater than 55 dB(A)
At the private open space area of the dwelling unit[1]	(1) $L_{Aeq(1hr)(6am-10pm)}$ not greater than 55 dB(A)
Balance of external site area, excluding private open space area and identified setback or buffer area	(1) 63 dB(A) assessed as the $L_{A10(18\ hour)}$ level
For - Community Facility, Education Facility, Child Care Centre, Commercial uses, Industrial uses, Institution or Place of Worship	
Inside common areas of buildings associated with the use	(1) Design sound levels as detailed in Table 3.

Table 3 - Design Sound Levels

Building Type	Location	Indoor Design Sound Level dB(A) measured as $L_{A\ max,adj,T}$
Community Facility - other than Health Care / Hospital	Court houses	40
	Libraries and galleries	50
Place of Worship	Place of Worship	50
Health Care / Hospital Institution	Consulting rooms	45
	Wards, theatres and treatment rooms	50
	Laboratories	65
	Service areas	75
Education Facility	Library and study areas	50
	Teaching areas	55
	Workshop	75
Child Care Centre	Teaching areas	55
	Sleeping areas	50
Commercial Buildings	Private offices and conference rooms	55
	Drafting and open offices	65
	Shops, supermarkets and showrooms	70
Industrial Buildings	Inspection, analysis and precision work areas	70
	Light machinery, assembly and bench work areas	75
	Heavy machinery, warehouse and maintenance areas	80

Notes -

(1) Except for a caretakers dwelling or relatives apartment - these uses should still give consideration to appropriate design to attenuate noise impacts.
(2) All analysis work in relation to Table 1 is undertaken by a suitably qualified acoustic engineer.
(3) The 63 dB(A) assessed as the $L_{A10(18\ hour)}$ measured 1 metre from façade does not apply to upper levels provided it can be demonstrated that -
  (a) internal noise levels on the upper levels are achievable;
  (b) an area of private open space in compliance with the relevant criteria is provided elsewhere on the site.
(4) $L_{Aeq(1hr)(6am-10pm)}$ represents the highest 1hour equivalent continuous A-weighted sound pressure level between 6am and 10pm. The $L_{Aeq(1hr)}$ may be calculated as the logarithmic average of the highest four consecutive 15-minute samples and is not restricted to measurement from the hour.
(5) The average $L_{Amax(10pm-6am)}$ represents the average of the A-weighted maximum sound pressure levels of road vehicle or train pass-by events between 10pm and 6am, excluding emergency vehicles. As the maximum level of a road vehicle or train pass-by event is a relevant criteria for sleep disturbance for the intermittent traffic situations generally experienced at night in Redland City, the intent of this criteria is to identify a representative maximum noise level caused by a road vehicle or train pass-by for development design purposes. As the maximum noise level of a road vehicle or train is unlikely to change between day and night, this criteria may be determined during the day provided it can be demonstrated that the road vehicle or train traffic measured is representative of the night time traffic composition. Traffic count data for the measurement period and night time period must be supplied. Daytime measurement must be for a minimum 1 hour. An L1 measurement is only permitted if it can be demonstrated that the measurement represents the L1 of road vehicle or train pass-by events only and does not include other noise sources. For rail noise measurements only, the metre should be set to slow time-weighting.
(6) The private open space area criteria represents the road traffic or rail noise levels to be achieved whether free field or non -free field. A correction of plus 2.5 dB(A) for facade reflection is to be included in free field calculations where the measurement location is to be affected by proposed future facades. External areas exceeding the design level noise criteria for private open space areas will not be considered as private open space.
(7) The calculation and prediction of -
  (a) road traffic noise levels are to be in accordance with *the Road Traffic Noise Management Code of Practice*, published by the Queensland Department of Main Roads and in accordance with *Australian Standard 2702 - 1984: Acoustics - Methods for the Measurement of Road Traffic Noise*. Alternative road traffic noise prediction models may be used where they can be justified as being appropriate to the circumstances of the particular situation and location;
  (b) rail noise levels are to be in accordance with relevant Australian Standards and Codes of Practice. Any differences between the measured and predicted existing levels of greater than ±2 dB(A) is to trigger the review of all inputs and assumptions.
(8) An assessment of -
  (a) road traffic noise is to be based on the ultimate traffic flow for the road. If such data does not exist a 10-year planning projection is to be used;
  (b) rail noise is to be based on the ultimate traffic flow for the railway. If such data does not exist a planning projection based on the best possible data is to be used.
(9) The determination of building construction, siting and design measures required to achieve internal noise levels in respect of road traffic noise is in accordance with *Australian Standard 2107: 2000 - Acoustics- Recommended design sound levels and reverberation times for building interiors* and *Australian Standard 3671:1989 - Acoustics - Road traffic noise intrusion - Building siting and construction*. Alternative methods may be used where it is justified for the circumstances of the particular situation and location.

this page purposely
left blank

Division 11 - Water Supply Catchments Overlay

5.11.1 Introduction

(1) This division contains the provisions for the Water Supply Catchments Overlay. They are -

(a) The Water Supply Catchments Overlay Tables of Assessment, that incorporates -
- (i) Levels of assessment for development in the Water Supply Catchments Overlay (section 5.11.2);
- (ii) Assessment criteria for development in the Water Supply Catchments Overlay (section 5.11.3);
- (iii) Water Supply Catchments Overlay - Table of Assessment for Material Change of Use of Premises (section 5.11.4);
- (iv) Water Supply Catchments Overlay - Table of Assessment for Other Development not associated with a Material Change of Use of Premises (section 5.11.5).

(b) The Water Supply Catchments Overlay Code, that incorporates -
- (i) Compliance with the Water Supply Catchments Overlay Code (section 5.11.6);
- (ii) Overall Outcomes for the Water Supply Catchments Overlay Code (section 5.11.7);
- (iii) Acceptable Solutions applicable to Self-Assessable Development (section 5.11.8)
- (iv) Specific Outcomes and Probable Solutions applicable to Assessable Development (section 5.11.9).

5.11.2 Levels of assessment for development affected by the Water Supply Catchments Overlay

(1) Sections 5.11.4 and 5.11.5 identify the level of assessment for development affected by the Water Supply Catchments Overlay, as follows -

(a) section 5.11.4 Water Supply Catchments Overlay - Table of Assessment for Making a Material Change of Use of Premises -
- (i) column 1 identifies uses that are exempt, self-assessable or assessable;
- (ii) column 2 identifies the level of assessment for the uses listed in column 1;
- (iii) where the use is defined in Part 9 - Schedule 3 - Dictionary, Division 1 - Uses and is not listed in column 1 it is exempt;
- (iv) where the use is not defined in Part 9 - Schedule 3 - Dictionary, Division 1 - Uses and is not listed in column 1 it is code assessable.

(b) section 5.11.5 Water Supply Catchments Overlay - Table of Assessment for Other Development not associated with a Material Change of Use of Premises -
- (i) column 1 identifies other development that is exempt, self-assessable or assessable;
- (ii) column 2 identifies the level of assessment for other development listed in column 1;
- (iii) where the other development is not listed in column 1 it is exempt.

(2) Other overlays may alter the level of assessment identified in 1(a) and (b)[5.53].

[5.53] Refer to Part 5 - Overlays to determine the level of assessment for the use or other development where another overlay affects the lot and Part 1, section 1.2.5(10)(f) that explains how the highest level of assessment applies.

5.11.3 Assessment criteria for development in the Water Supply Catchments Overlay

(1) Development affected by the Water Supply Catchments Overlay is assessed against the assessment criteria listed in column 3 of sections 5.11.4 and 5.11.5, as follows -

(a) acceptable solutions in section 5.11.8 of the Water Supply Catchments Overlay Code for self-assessable development; or

(b) specific outcomes in section 5.11.9 of the Water Supply Catchments Overlay Code for assessable development.

(2) Self-assessable development that does not comply with all the acceptable solutions in section 5.11.8 of the Water Supply Catchments Overlay Code is assessable development.

5.11.4 Water Supply Catchments Overlay - Table of Assessment for Material Change of Use of Premises

Water Supply Catchments Overlay -
Table of Assessment for Material Change of Use of Premises

column 1	column 2	column 3
Use[5.54]	**Level of Assessment**[5.55]	**Assessment Criteria**
■ Bed and Breakfast ■ Dwelling House ■ Home Business ■ Relatives Apartment ■ Park ■ Roadside Stall	Self-Assessable If complying with the assessment criteria being the acceptable solutions listed in column 3 Code Assessable If not self-assessable	■ Acceptable Solutions in section 5.11.8 of the Water Supply Catchments Overlay ■ Water Supply Catchments Overlay Code
■ Aged Persons and Special Needs Housing ■ Agriculture ■ Airport ■ Animal Keeping ■ Apartment Building ■ Brothel ■ Bulky Goods Showroom ■ Car Wash Facility ■ Caretakers Dwelling ■ Cemetery ■ Child Care Centre ■ Commercial Office ■ Community Facility ■ Display and Sale Activity ■ Display Dwelling ■ Drive Through Restaurant ■ Dual Occupancy ■ Education Facility ■ Emergency Services ■ Estate Sales Office ■ Extractive Industry ■ Forestry ■ Funeral Parlour ■ Garden Centre ■ General Industry ■ Health Care Centre ■ Heavy Industry ■ Hospital ■ Hotel ■ Indoor Recreation Facility ■ Institution ■ Intensive Agriculture ■ Landscape Supply Depot ■ Marine Services	Code Assessable	■ Water Supply Catchments Overlay Code

[5.54] See Part 9 - Schedule 3 - Dictionary, Division 1 - Uses for defined uses.
[5.55] See Part 9 - Schedule 3 - Dictionary, Division 2 - Administrative Terms for a definition of level of assessment.

Water Supply Catchments Overlay -
Table of Assessment for Material Change of Use of Premises

column 1	column 2	column 3
Use[5.54]	**Level of Assessment**[5.55]	**Assessment Criteria**
Continued - ■ Mobile Home Park ■ Multiple Dwelling ■ Night Club ■ Outdoor Dining ■ Outdoor Recreation Facility ■ Passenger Terminal ■ Place of Worship ■ Produce Store ■ Refreshment Establishment ■ Retail Warehouse ■ Rural Enterprise ■ Service Industry ■ Service Station ■ Shop ■ Small Lot House ■ Telecommunications Facility ■ Temporary Use ■ Tourist Accommodation ■ Tourist Park ■ Utility Installation ■ Vehicle Depot ■ Vehicle Parking Station ■ Vehicle Repair Premises ■ Veterinary Surgery ■ Warehouse	Code Assessable	■ Water Supply Catchments Overlay Code
Defined uses not listed in column 1	Exempt	
Uses not defined in Part 9 - Schedule 3 - Dictionary, Division 1 - Uses	Code Assessable	■ Water Supply Catchments Overlay Code

5.11.5 Water Supply Catchments Overlay - Table of Assessment for Other Development not associated with a Material Change of Use of Premises

Water Supply Catchments Overlay - Table of Assessment for Other Development

column 1	column 2	column 3
Other Development	**Level of Assessment**[5.56]	**Assessment Criteria**
Reconfiguration for -		
■ Creating lots by subdividing another lot by Standard Format Plan[5.57] ■ Rearranging the boundaries of a lot by registering a plan of subdivision; or ■ Dividing land into parts by Agreement; or ■ Creating an easement giving access to a lot from a constructed road	Code Assessable	■ Water Supply Catchments Overlay Code
Building Work for -		
■ Domestic Additions ■ Domestic Outbuilding ■ Private Swimming Pool ■ Private Tennis Court	Self-Assessable If complying with the assessment criteria being the acceptable solutions listed in column 3 Code Assessable If not self-assessable	■ Acceptable Solutions in section 5.11.8 of the Water Supply Catchments Overlay Code ■ Water Supply Catchments Overlay Code
On-site raising or relocation of an existing dwelling unit	Code Assessable	■ Water Supply Catchments Overlay Code
Operational Work for -		
■ Excavation and Fill	Exempt If - (1) Disturbing less than 50m^3 of soil; (2) A height/depth not exceeding 300mm measured from ground level Code Assessable If not Exempt	■ Water Supply Catchments Overlay Code

[5.56] See Part 9 - Schedule 3 - Dictionary, Division 2 - Administrative Terms for a definition of level of assessment.
[5.57] Whether or not having a Community Management Statement.

Water Supply Catchments Overlay - Table of Assessment for Other Development

column 1	column 2	column 3
Other Development	**Level of Assessment**[5.56]	**Assessment Criteria**
■ Operational Work for Reconfiguring a Lot (by Standard Format Plan) ■ Private Waterfront Structure	Code Assessable	■ Water Supply Catchments Overlay Code
All other development not listed in column 1	Exempt	

5.11.6 Compliance with the Water Supply Catchments Overlay Code

(1) Development that is consistent with the following complies with the Water Supply Catchments Overlay Code -

(a) acceptable solutions in section 5.11.8 where self-assessable development; or

(b) specific outcomes in section 5.11.9 where assessable development.

5.11.7 Overall Outcomes of the Water Supply Catchments Overlay Code

(1) The overall outcomes are the purpose of the Water Supply Catchments Overlay Code.

(2) The overall outcome sought for the Water Supply Catchments Overlay Code is the following -

(a) to ensure uses and other development within the water supply catchments protect water quality by -

(i) reducing the potential for contamination of the water supply;

(ii) minimising sediments and preventing contaminants from entering the water supply.

5.11.8 Acceptable Solutions applicable to Self-Assessable Development

Self-Assessable Development	
Acceptable Solutions	
A1.	(1) Uses and other development are located a minimum of - (a) 150 metres from the high water level of Tingalpa Reservoir; or (b) 100 metres from top of bank of major waterway systems that supply the catchments; or (c) 60 metres from top of bank of minor waterway systems that supply the catchments.

5.11.9 Specific Outcomes and Probable Solutions applicable to Assessable Development

Assessable Development			
Specific Outcomes		**Probable Solutions**	
S1.	(1) Uses and other development are located a minimum of - (a) 150 metres from the high water level of a ponded water supply, being Tingalpa Reservoir; or (b) 100 metres from top of bank of major waterway systems that supply the catchments; or (c) 60 metres from top of bank of minor waterway systems that supply the catchments; or **Note -** Compliance with S1.(1) achieves compliance with this Code. (2) Uses and other development do not have an adverse impact on water quality within the catchments by - (a) being separated, by way of distance from the high water level of ponded water supply and other waterways within the catchments shown on this overlay map; (b) maximising the retention of riparian vegetation that maintains water quality by way of filtering sediments, nutrients and other pollutants; (c) ensuring stormwater run-off is treated within the premises to maintain or enhance water quality of the water supply catchments; (d) using a range of source, conveyance and discharge mechanisms, such as stormwater storage systems, retention trenches, detention basins, or constructed wetlands to reduce stormwater run-off volume, peak and velocity; (e) ensuring stormwater discharge is dispersed naturally to minimise erosion impacts; (f) maximising use of permeable surfaces to allow infiltration of stormwater run-off; (g) constructing roads and vehicle accessways and other infrastructure so that the final level is contoured to the	**P1.**	(1) No probable solution identified; or (2) Uses and other development - (a) are separated by a minimum of - (i) 150 metres from the high water level of the ponded water supply, being Tingalpa Reservoir, shown on this overlay map; or (ii) 100 metres from top of bank of a major waterway shown on this overlay map; or (iii) 60 metres from top of bank of a minor waterway shown on this overlay map; (b) incorporate all mechanisms necessary to comply with Part 9 - Schedule 11 - Water Quality Objectives for stormwater being discharged from the site. **Note -** Refer to Part 8 - Division 9 - Stormwater Management Code to assist in achieving S1.

Assessable Development			
Specific Outcomes		**Probable Solutions**	
	original ground level and does not worsen or concentrate down slope run-off; (h) retaining overland drainage lines in their natural state; (i) not involving changes to landform by way of clearing, excavation or fill.		
S2.	(1) Operation of uses and other development is undertaken in a manner that effectively manages the storage and disposal of - (a) solid waste; (b) liquid waste.	**P2.**	(1) Waste management for uses and other development includes methods to ensure that - (a) solid waste is - (i) stored in an area that has an impermeable floor surface; (ii) disposed of in an approved waste disposal area outside the catchments; (b) wastewater is - (i) treated and disposed of on-site outside the buffer areas detailed in P1; or (ii) removed and disposed of outside the catchment. **Note -** In catchment areas identified on the Water Supply Catchments Overlay Map, secondary or higher treatment of wastewater is preferred.
S3.	(1) Chemicals or other potential contaminants are used and stored in a manner that prevents leaching or discharge to ground or surface waters of the catchments including - (a) contaminants are stored in an area that is - (i) roofed and has an impermeable floor surface; (ii) bunded; (iii) of a sufficient size to contain, in an impermeable area/system, a spill of equivalent volume to the total volume of material being stored, until removal from the site by an approved means.	**P3.**	(1) No probable solution identified.
S4.	Uses and other development do not result in the introduction or spread of aquatic weed species.	**P4.**	The growing, harvesting or otherwise use of aquatic weed species identified in Part 9 - Schedule 12 - Weed Species List is not undertaken on the lot or premises.

Water Supply Catchments Overlay

this page purposely
left blank

Division 12 - Waterways, Wetlands and Moreton Bay Overlay

5.12.1 Introduction

(1) This division contains the provisions for the Waterways, Wetlands and Moreton Bay Overlay. They are -

(a) The Waterways, Wetlands and Moreton Bay Overlay - Tables of Assessment, that incorporates -
- (i) Levels of assessment for development in the Waterways, Wetlands and Moreton Bay Overlay (section 5.12.2);
- (ii) Assessment criteria for development in the Waterways, Wetlands and Moreton Bay Overlay (section 5.12.3);
- (iii) Waterways, Wetlands and Moreton Bay Overlay - Table of Assessment for Material Change of Use of Premises (section 5.12.4);
- (iv) Waterways, Wetlands and Moreton Bay Overlay - Table of Assessment for Other Development not associated with a Material Change of Use of Premises (section 5.12.5).

(b) The Waterways, Wetlands and Moreton Bay Overlay Code, that incorporates -
- (i) Compliance with the Waterways, Wetlands and Moreton Bay Overlay Code (section 5.12.6);
- (ii) Overall Outcomes for the Waterways, Wetlands and Moreton Bay Overlay Code (section 5.12.7);
- (iii) Acceptable Solutions applicable to Self-Assessable Development (section 5.12.8)
- (iv) Specific Outcomes and Probable Solutions applicable to Assessable Development (section 5.12.9).

5.12.2 Levels of assessment for development affected by the Waterways, Wetlands and Moreton Bay Overlay

(2) Sections 5.12.4 and 5.12.5 identify the level of assessment for development affected by the Waterways, Wetlands and Moreton Bay Overlay, as follows -

(a) section 5.12.4 Waterways, Wetlands and Moreton Bay Overlay - Table of Assessment for Making a Material Change of Use of Premises -
- (i) column 1 identifies uses that are exempt, self assessable or assessable;
- (ii) column 2 identifies the level of assessment for the uses listed in column 1;
- (iii) where the use is defined in Part 9 - Schedule 3 - Dictionary, Division 1 - Uses and is not listed in column 1 it is exempt;
- (iv) where the use is not defined in Part 9 - Schedule 3 - Dictionary, Division 1 - Uses and is not listed in column 1 it is code assessable.

(b) section 5.12.5 Waterways, Wetlands and Moreton Bay Overlay - Table of Assessment for Other Development not associated with a Material Change of Use of Premises -
- (i) column 1 identifies other development that is exempt, self assessable or assessable;
- (ii) column 2 identifies the level of assessment for other development listed in column 1;
- (iii) where the other development is not listed in column 1 it is exempt.

(3) Other overlays may alter the level of assessment identified in 1(a) and (b)[5.58].

Note -

If the use or other development is on a premises that has been created through a reconfiguration approval, since the current RPS version update, the maters for consideration against this Code are deemed to have been addressed. This applies to uses and other development that are listed as self-assessable in the applicable zone code.

[5.58] Refer to Part 5 - Overlays to determine the level of assessment for the use or other development where another overlay affects the lot and Part 1 - section 1.2.5(10)(f) that explains how the highest level of assessment applies.

5.12.3 Assessment criteria for development in the Waterways, Wetlands and Moreton Bay Overlay

(1) Development affected by the Waterways, Wetlands and Moreton Bay Overlay is assessed against the assessment criteria listed in column 3 of sections 5.12.4 and 5.12.5, as follows -

(a) acceptable solutions in section 5.12.8 of the Waterways, Wetlands and Moreton Bay Overlay Code for self-assessable development; or

(b) specific outcomes in section 5.12.9 of the Waterways, Wetlands and Moreton Bay Overlay Code for assessable development.

(2) Self-assessable development that does not comply with all the acceptable solutions in section 5.12.8 of the Waterways, Wetlands and Moreton Bay Overlay Code is assessable development.

5.12.4 Waterways, Wetlands and Moreton Bay Overlay - Table of Assessment for Material Change of Use of Premises

Waterways, Wetlands and Moreton Bay Overlay -
Table of Assessment for Material Change of Use of Premises

column 1	column 2	column 3
Use[5.59]	**Level of Assessment**[5.60]	**Assessment Criteria**
■ Bulky Goods Showroom ■ Car Wash Facility ■ Commercial Office ■ Display and Sale Activity ■ Funeral Parlour ■ Garden Centre ■ General Industry ■ Health Care Centre ■ Landscape Supply Depot ■ Place of Worship ■ Produce Store ■ Refreshment Establishment ■ Retail Warehouse ■ Service Industry ■ Service Station ■ Shop ■ Vehicle Depot ■ Vehicle Repair Premises ■ Veterinary Surgery ■ Warehouse	Exempt If - ■ A tenancy change only; ■ Involving only minor building work to an existing building Code Assessable If not Exempt	■ Waterways, Wetlands and Moreton Bay Overlay Code
■ Bed and Breakfast ■ Dwelling House ■ Home Business ■ Park ■ Relatives Apartment	Self-Assessable If complying with the assessment criteria being the acceptable solutions listed in column 3 Code Assessable If not self-assessable	■ Acceptable Solutions in section 5.12.8 of the Waterways, Wetlands and Moreton Bay Overlay Code ■ Waterways, Wetlands and Moreton Bay Overlay Code
■ Aged Persons and Special Needs Housing ■ Agriculture ■ Airport ■ Animal Keeping ■ Apartment Building ■ Brothel ■ Cemetery ■ Child Care Centre ■ Community Facility ■ Drive Through Restaurant ■ Dual Occupancy ■ Education Facility ■ Emergency Services	Code Assessable	■ Waterways, Wetlands and Moreton Bay Overlay Code

[5.59] See Part 9 - Schedule 3 - Dictionary, Division 1 - Uses for defined used.
[5.60] See Part 9 - Schedule 3 - Dictionary, Division 2 - Administrative Terms for a definition of level of assessment.

Waterways, Wetlands and Moreton Bay Overlay - Table of Assessment for Material Change of Use of Premises

column 1	column 2	column 3
Use[5.59]	**Level of Assessment**[5.60]	**Assessment Criteria**
Continued - ■ Estate Sales Office ■ Extractive Industry ■ Forestry ■ Heavy Industry ■ Hospital ■ Hotel ■ Indoor Recreation Facility ■ Institution ■ Intensive Agriculture ■ Marine Services ■ Mobile Home Park ■ Multiple Dwelling ■ Night Club ■ Outdoor Dining ■ Outdoor Recreation Facility ■ Passenger Terminal ■ Roadside Stall ■ Rural Enterprise ■ Small Lot House ■ Telecommunications Facility ■ Tourist Accommodation ■ Tourist Park ■ Utility Installation ■ Vehicle Parking Station	Code Assessable	■ Waterways, Wetlands and Moreton Bay Overlay Code
Defined uses not listed in column 1	Exempt	
Uses not defined in Part 9 - Schedule 3 - Dictionary, Division 1 - Uses	Code Assessable	■ Waterways, Wetlands and Moreton Bay Overlay Code

5.12.5 Waterways, Wetlands and Moreton Bay Overlay - Table of Assessment for Other Development not associated with a Material Change of Use of Premises

Waterways, Wetlands and Moreton Bay Overlay - Table of Assessment for Other Development

column 1	column 2	column 3
Other Development	**Level of Assessment[5.61]**	**Assessment Criteria**
Reconfiguration for -		
■ Creating lots by subdividing another lot by Standard Format Plan[5.62] ■ Rearranging the boundaries of a lot by registering a plan of subdivision; or ■ Dividing land into parts by Agreement; or ■ Creating an easement giving access to a lot from a constructed road	Code Assessable	■ Waterways, Wetlands and Moreton Bay Overlay Code
Building Work for -		
■ Domestic Additions ■ Domestic Outbuilding ■ Private Swimming Pool ■ Private Tennis Court	Self-Assessable If complying with the assessment criteria being the acceptable solutions listed in column 3 Code Assessable If not self-assessable	■ Acceptable Solutions in section 5.12.8 of the Waterways, Wetlands and Moreton Bay Overlay Code ■ Waterways, Wetlands and Moreton Bay Overlay Code
On-site raising or relocation of an existing dwelling unit	Code Assessable	■ Waterways, Wetlands and Moreton Bay Overlay Code
Operational Work for -		
■ Excavation and Fill	Exempt If - (1) Disturbing less than $50m^3$ of soil; (2) A height/depth not exceeding 300mm measured from ground level Code Assessable If not Exempt	■ Waterways, Wetlands and Moreton Bay Overlay Code

[5.61] See Part 9 - Schedule 3 - Dictionary, Division 2 - Administrative Terms for a definition of level of assessment.
[5.62] Whether or not having a Community Management Statement.

Waterways, Wetlands and Moreton Bay Overlay - Table of Assessment for Other Development

column 1	column 2	column 3
Other Development	**Level of Assessment[5.61]**	**Assessment Criteria**
■ Private Waterfront Structure ■ Operation Work for Reconfiguring a Lot (by Standard Format Plan)	Code Assessable	■ Waterways, Wetlands and Moreton Bay Overlay Code
All other development not listed in column 1	Exempt	

5.12.6 Compliance with the Waterways, Wetlands and Moreton Bay Code

(1) Development that is consistent with the following complies with the Waterways, Wetlands and Moreton Bay Overlay Code -

(a) acceptable solutions in section 5.12.8 where self-assessable development; or

(b) specific outcomes in section 5.12.9 where self assessable development.

Note -

The following planning scheme policies will assist in achieving specific outcomes within the Waterways, Wetlands and Moreton Bay Overlay Code -

- Planning Scheme Policy 4 - Ecological Impact;
- Planning Scheme Policy 14 - Waterways, Wetlands and Moreton Bay.

5.12.7 Overall Outcomes of the Waterways, Wetlands and Moreton Bay Overlay Code

(1) The overall outcomes are the purpose of the Waterways, Wetlands and Moreton Bay Overlay Code.

(2) The overall outcomes sought for the Waterways, Wetlands and Moreton Bay Overlay Code are the following -

(a) uses and other development protect, enhance, manage and minimise impacts on the environmental values of waterways, wetlands, coastal drainage areas, Moreton Bay and natural drainage lines and their associated ecological, recreation, economic and scenic values by -

(i) retaining habitat links;
(ii) protecting marine, tidal and riparian vegetation;
(iii) retaining access for maintenance purposes;
(iv) maintaining and enhancing water quality and hydrological balance;
(v) retaining biodiversity;
(vi) retaining bank stability;
(vii) providing public access to open space where under local government ownership or control.

5.12.8 Acceptable Solutions applicable to Self-Assessable Development

Self-Assessable Development	
Acceptable Solutions	
A1.	Uses and other development are located outside the area shown on the overlay map.

5.12.9 Specific Outcomes and Probable Solutions applicable to Assessable Developm ent

Assessable Development			
Specific Outcomes		**Probable Solutions**	
	Where proposed on a lot or premises affected by a major waterway, minor waterway, freshwater wetland, Moreton Bay foreshore buffer or waterway or wetland buffer on this overlay map –		
S1.1	(1) Uses and other development are located outside the area shown on the overlay map; or **Note -** Compliance with S1.1(1) achieves compliance with this Code. (2) Uses and other development protect and minimise impacts on environmental values and associated ecological, recreation, economic and scenic values by - (a) providing buffers in the form of riparian vegetation; (b) providing separation by way of distance between the development and the vegetated buffers; (c) ensuring stormwater run-off is treated within the premises to maintain or enhance water quality of receiving waters; (d) utilising a range of source, conveyance and discharge mechanisms, such as stormwater storage systems, retention trenches, detention basins, or constructed wetlands to re-use and reduce stormwater run-off volumes, peaks and velocity; (e) ensuring stormwater discharge is dispersed naturally to minimise erosion impacts; (f) maximising the use of permeable surfaces to allow infiltration of stormwater run-	**P1.1**	(1) No probable solution identified; or (2) Protect and minimise impacts on the identified environmental values and associated ecological, recreation, economic and scenic values by - (a) providing vegetated buffers in accordance with Table 1 - Minimum Buffer Distances and Vegetation Requirements; (b) utilising native plants listed in Part 9 - Schedule 10 - Vegetation Species List as being suitable to the area; (c) incorporating methods other than direct piping of stormwater to receiving waters to - (i) reduce velocity and quantity of stormwater run-off, (ii) enhance water quality at the point of discharge; (iii) minimise erosion impacts; (iv) maximise permeable surfaces; (d) incorporate water collection devices that allow for the re-use of run-off, such as rainwater tanks fitted with a first flush system; (e) ensure stormwater leaving the premises complies with the

Assessable Development			
Specific Outcomes		**Probable Solutions**	
	off; (g) maintaining stability of bed and banks of waterways and the foreshore of Moreton Bay; (h) enhancing biodiversity of marine, tidal and riparian habitat.		water quality objectives listed in Part 9 - Schedule 11 - Water Quality Objectives. **Note -** ■ Refer to Part 9 - Schedule 11 - Water Quality Objectives to determine the identified environmental values. ■ Refer to Part 8 - Division 9 - Stormwater Management for mechanisms to address water quality and stormwater run-off.
S1.2	(1) Degraded, cleared or otherwise disturbed waterways, wetlands and the foreshore of Moreton Bay are rehabilitated, re-vegetated and stabilised in conjunction with use or other development by incorporating - (a) direct restoration including associated bank and in-stream vegetation; (b) protection or enhancement of significant habitat for migratory birds, including areas subject to conservation agreements such as JAMBA, CAMBA and Ramsar and other water dependant fauna species; (c) weed management strategies; (d) access management; (e) replanting of native species so as to achieve a vegetation density and structure compatible with adjacent undisturbed areas.	**P1.2**	(1) Rehabilitation, re-vegetation and stabilisation includes - (a) fully vegetated core and foreshore riparian areas and partially vegetation outer riparian areas in accordance with Table 1 - Minimum Buffer Distances and Vegetation Requirements; (b) incorporate native species identified in Part 9 - Schedule 10- Vegetation Species List as being suited to the local area; (c) where remnant vegetation exists retain and enhance the existing vegetation to meet the above requirements; (d) remove weed species identified in Part 9 - Schedule 12 - Weed Species List from within the riparian area; (e) where a minor waterway, select species that at maturity will provide 70 percent canopy coverage of the waterway. Refer to Diagram 3.
S1.3	(1) Uses and other development within the core and outer riparian, or foreshore buffer areas is limited to that necessary to - (a) achieve desired water quality objectives; (b) provide passive recreational opportunities; (c) allow low-impact access and access for maintenance purposes.	**P1.3**	(1) Uses and other development - (a) in the outer riparian area are limited to - (i) low-impact pedestrian and cycle paths; (ii) BBQ facilities, tables, seating and shelters; (iii) stormwater quality improvement devices, such as constructed wetlands and natural drainage design; (b) do not occur in the core riparian area.

Assessable Development			
Specific Outcomes		**Probable Solutions**	
S1.4	Retain or restore in-stream habitat values through the enhancement or reinstatement of habitat features.	**P1.4**	No probable solution identified. **Note -** The incorporation of features such as fallen logs, rocks, bank overhangs, trailing vegetation, among others will assist in replicating natural in-stream habitat values.
S2.	Where proposed on a lot or premises affected by a natural drainage line on this overlay map - (1) Retain the drainage line in its natural state and provide sufficient buffers to protect the drainage line; (2) Where degraded, enhance the natural drainage line through stabilisation, re-vegetation and stormwater quality improvement devices that recognise the function of the natural drainage line.	**P2.**	(1) No probable solution identified; (2) No probable solution identified.
S3.	Where proposed on a lot or premises affected by the coastal drainage area on this overlay map - (1) Uses and other development minimise impacts on environmental values and associated ecological, recreation, economic and scenic values by - (a) providing buffers in the form of riparian vegetation; (b) providing separation by way of distance between the development and the vegetated buffers; (c) ensuring stormwater run-off is treated within the premises to maintain or enhance water quality of receiving waters; (d) enhancing biodiversity of marine, tidal and riparian habitat.	**P3.**	(1) Minimise impacts on the identified environmental values and associated ecological, recreation, economic and scenic values by - (a) providing vegetated buffers in accordance with Table 1 - Minimum Buffer Distances and Vegetation Requirements; (b) utilising native plants listed in Part 9 - Schedule 10 - Vegetation Species List as being suitable to the area.

Table 1 - Minimum Buffer Distances and Re-vegetation Requirements

Waterway Category	Buffer Requirements	Riparian Vegetation Requirements	
		Core and Foreshore	Outer
Major Waterway	(1) 100 metres measured from top bank, except where there is- (a) tidal influence (See Note 1), in which case 100 metres from the line of Highest Astronomical Tide (HAT) or the top of the bank whichever is the greater; or (b) no definable bank, in which case 100 metres measured from the mid point between the 1 percent AEP (100 year ARI) lines on both sides of the waterway as illustrated in Diagram 1 - Determining Buffer Distances Where No Definable Bank.	40 metres	60 metres
Freshwater Wetland - See Note 2	100 metres measured from the 1 percent AEP (100 year ARI) line.	40 metres	60 metres
Tingalpa Reservoir	150 metres measured from the high water level.	40 metres	110 metres
Minor Waterway	(1) 60 metres measured from the top of bank, except where there is - (a) no definable bank, in which case 100 metres measured from the mid point between the 1 percent AEP (100 year ARI) lines on both sides of the waterway as illustrated in Diagram 1 - Determining Buffer Distances Where No Definable Bank.	40 metres	20 metres
Moreton Bay Foreshore - See Note 3	100 metres measured from Highest Astronomical Tide (HAT).	40 metres	60 metres
Coastal Drainage Area	5 metres the location of which is determined on an individual basis.	5 metres in total	

Note 1 - Tidal influence points and buffer areas are identified on the Waterways, Wetlands and Moreton Bay Overlay Map.

Note 2 - Freshwater Wetlands include -

- Black Swamp Wetlands, Cleveland;
- Tarradarrapin Wetlands, Birkdale; and
- Egret Colony Wetlands, Victoria Point.

Note 3 - For foreshore areas of Moreton Bay, soft foreshore treatments, such as beaches, vegetation or natural design revetments are used. Sea walls or the like are not preferred.

Diagram 1 - Determining Buffer Distances Where No Definable Bank

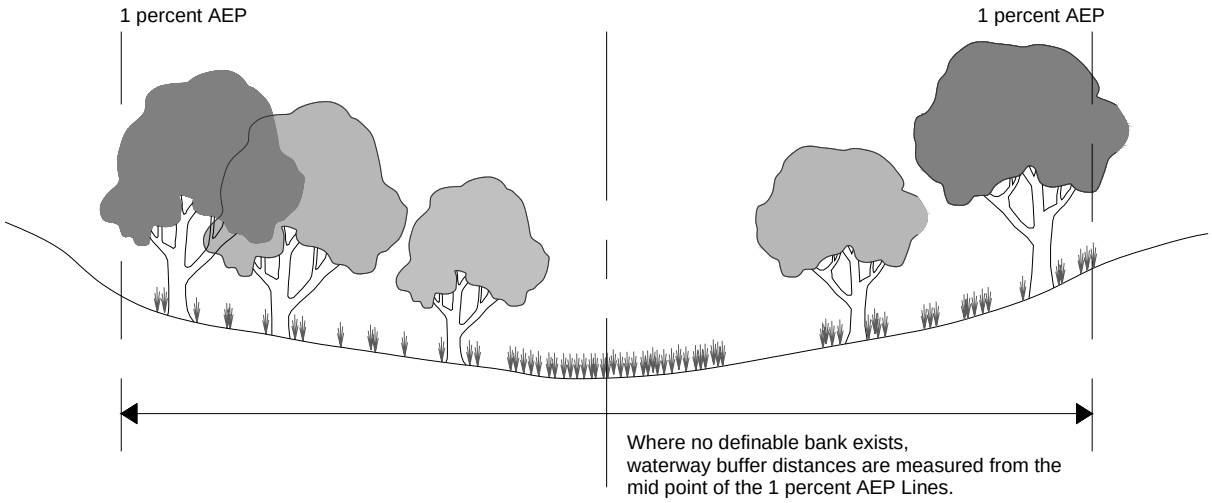

Diagram 2 - Major Waterway and Wetland Buffers

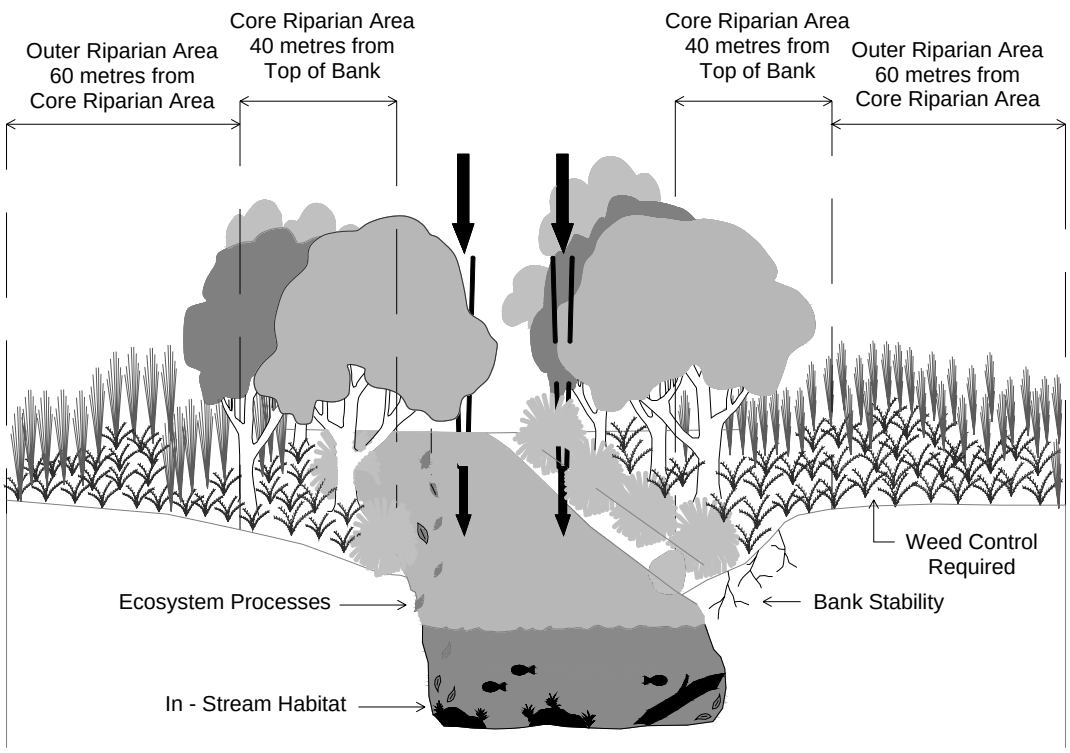

Diagram 3 - Minor Waterway Buffers

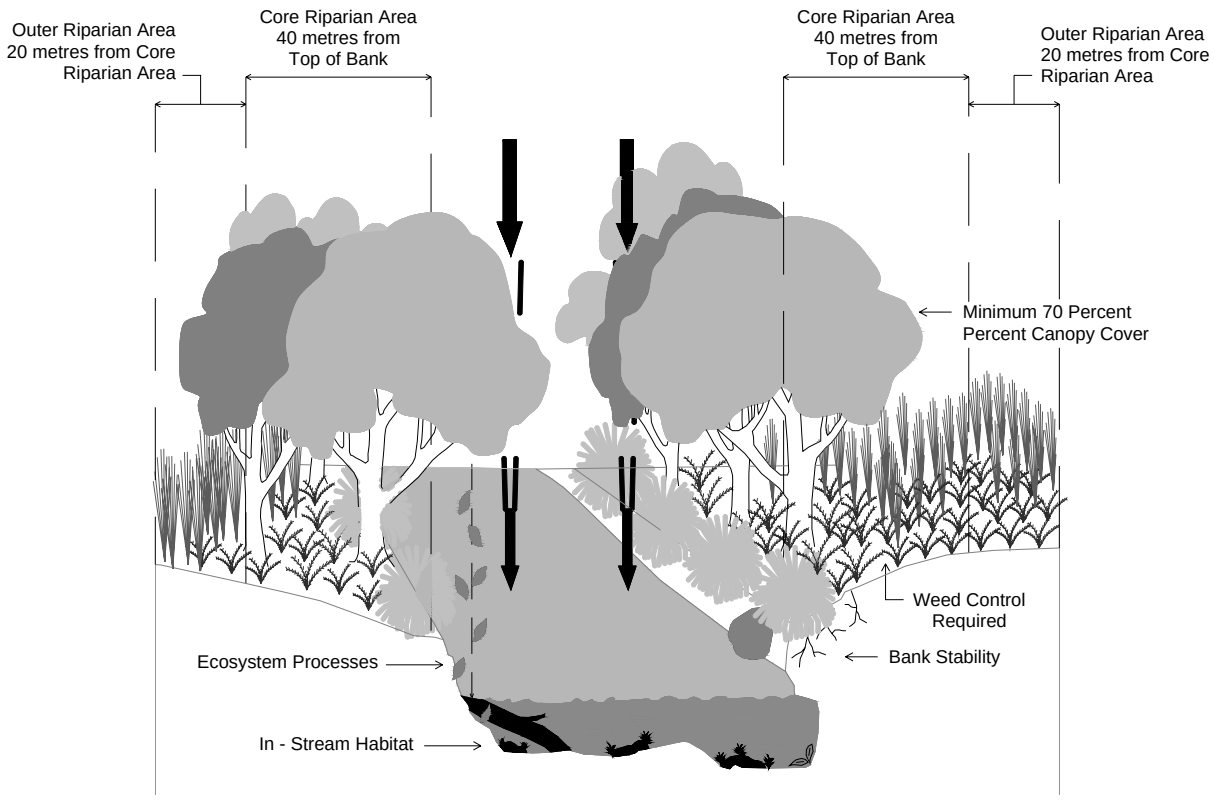

this page purposely
left blank

Division 13 – Landslide Hazard Overlay

5.13.1 Introduction

(1) This division contains the provisions for the Landslide Hazard Overlay. They are –

(a) The Landslide Hazard Overlay Tables of Assessment, that incorporates –
- (i) Levels of assessment for development in the Landslide Hazard Overlay (section 5.13.2);
- (ii) Assessment criteria for development in the Landslide Hazard Overlay (section 5.13.3);
- (iii) Landslide Hazard Overlay – Table of Assessment for Material Change of Use of Premises (section 5.13.4);
- (iv) Landslide Hazard Overlay – Table of Assessment for Other Development not associated with a Material Change of Use of Premises (section 5.13.5).

(b) The Landslide Hazard Overlay Code, that incorporates –
- (i) Compliance with the Landslide Hazard Overlay Code (section 5.13.6);
- (ii) Overall Outcomes for the Landslide Hazard Overlay Code (section 5.13.7);
- (iii) Specific Outcomes and Probable Solutions applicable to Assessable Development (section 5.13.8).

5.13.2 Levels of assessment for development affected by the Landslide Hazard Overlay

(1) Sections 5.13.4 and 5.13.5 identify the level of assessment for development affected by the Landslide Hazard Overlay, as follows –

(a) Section 5.13.4 Landslide Hazard Overlay – Table of Assessment for Making a Material Changes of Use of Premises –
- (i) column 1 identifies uses that are exempt, self assessable or assessable;
- (ii) column 2 identifies the level of assessment for the uses listed in column 1;
- (iii) where the use is defined in Schedule 3 – Dictionary, Division 1 – Uses and is not listed in column 1 it is exempt;
- (iv) where the use is not defined in Schedule 3 – Dictionary, Division 1 – Uses and is not listed in column 1 it is code assessable.

(b) Section 5.13.5 Landslide Hazard Overlay – Table of Assessment for Other Development not associated with a Material Change of Use of Premises –
- (i) column 1 identifies other development that is exempt, self-assessable or assessable;
- (ii) column 2 identifies the level of assessment for other development listed in column 1;
- (iii) where the other development is not listed in column 1 it is exempt.

(2) Other Overlay may alter the level of assessment identified in 1(a) and (b) [5.63]

[5.63] Refer to Part 5 – Overlays to determine the level of assessment for the use or other development where another Overlay affects the lot and Part 1, section 1.2.5(8)(f) that explains how the highest level of assessment applies.

5.13.3 Assessment criteria for development in the Landslide Hazard Overlay

(1) Development affected by the Landslide Hazard Overlay is assessed against the assessment criteria listed in column 3 of sections 5.13.4 and 5.13.5, as follows –

(a) acceptable solutions in section 5.13.8 of the Landslide Hazard Overlay Code for self-assessable development; or

(b) specific outcomes in section 5.13.9 of the Landslide Hazard Overlay Code for Code assessable development.

(2) Self-assessable development that does not comply with all the acceptable solutions in section 5.13.8 of the Landslide Hazard Overlay Code is assessable development.

5.13.4 Landslide Hazard Overlay – Table of Assessment for Material Change of Use of Premises

Landslide Hazard Overlay – Table of Assessment for Material Change of Use of Premises

Column 1	Column 2	Column 3
Use[5.64]	**Level of Assessment**[5.65]	**Assessment Criteria**
■ Aged Persons and Special Needs Housing ■ Agriculture ■ Airport ■ Animal Keeping ■ Apartment Building ■ Bed and Breakfast ■ Brothel ■ Bulky Goods Showroom ■ Car Wash Facility ■ Caretakers Dwelling ■ Cemetery ■ Child Care Centre ■ Commercial Office ■ Community Facility ■ Display and Sale Activity ■ Drive Through Restaurant ■ Dual Occupancy ■ Dwelling House ■ Education Facility ■ Emergency Services ■ Estate Sales Office ■ Extractive Industry ■ Forestry ■ Funeral Parlour ■ Garden Centre ■ General Industry ■ Health Care Centre ■ Heavy Industry ■ Home Business ■ Hospital ■ Hotel ■ Indoor Recreation Facility ■ Institution ■ Intensive Agriculture ■ Landscape Supply Depot ■ Marine Services ■ Minor Utility ■ Mobile Home Hark ■ Multiple Dwelling ■ Night Club ■ Outdoor Dining ■ Outdoor Recreation Facility ■ Park	Self- Assessable If complying with the assessment criteria being the acceptable solutions listed in column 3 Code Assessable If not self-assessable	■ Acceptable Solutions in section 5.13.8 of the Landslide Hazard Overlay Code ■ Landslide Hazard Overlay Code

[5.64] See Schedule 3 – Dictionary, Division 1 – Uses for defined uses.
[5.65] See Schedule 3 – Dictionary, Division 2 – Administrative Terms for a definition of level of assessment.

Column 1	Column 2	Column 3
Use[5.64]	**Level of Assessment**[5.65]	**Assessment Criteria**
■ Passenger Terminal ■ Place of Worship ■ Produce Store ■ Refreshment Establishment ■ Relatives Apartment ■ Retail Warehouse ■ Roadside Stall ■ Rural Enterprise ■ Service Industry ■ Service Station ■ Shop ■ Small Lot House ■ Telecommunications Facility ■ Temporary Use ■ Tourist Accommodation ■ Tourist Park ■ Utility Installation ■ Vehicle Depot ■ Vehicle Parking Station ■ Vehicle Repair Premises ■ Veterinary Surgery ■ Warehouse	Self-Assessable If complying with the assessment criteria being the acceptable solutions listed in column 3 Code Assessable If not self-assessable	■ Acceptable Solutions in section 5.13.8 of the Landslide Hazard Overlay Code ■ Landslide Hazard Overlay Code
Defined uses not listed in column 1	Exempt	
Uses not defined in Part 9 – Schedule 3 – Dictionary, Division 1 - Uses	Code Assessable	■ Landslide Hazard Overlay

5.13.5 Landslide Hazard Overlay – Table of Assessment for Other Development not associated with a Material Change of Use of Premises

Landslide Hazard Overlay – Table of Assessment for Other Development

Column 1 Other Development	Column 2 Level of Assessment[5.66]	Column 3 Assessment Criteria
Reconfiguration for -		
Creating lots by subdividing another lot by Standard Format Plan[5.67]	Code Assessable	■ Landslide Hazard Overlay Code
■ Rearranging the boundaries of a lot by registering a plan of subdivision; or ■ Dividing land into parts by Agreement; or ■ Creating an easement giving access to a lot from a constructed road.	Self- Assessable If complying with the assessment criteria being the acceptable solutions listed in column 3 Code Assessable If not self-assessable	■ Acceptable Solutions on section 5.13.8 of the Landslide Hazard Overlay Code. ■ Landslide Hazard Overlay Code
Building Work for -		
Domestic Additions	Self- Assessable If complying with the assessment criteria being the acceptable solutions listed in column 3 Code Assessable If not self-assessable	■ Acceptable Solutions on section 5.13.8 of the Landslide Hazard Overlay Code. ■ Landslide Hazard Overlay Code
Domestic Outbuilding	Self- Assessable If complying with the assessment criteria being the acceptable solutions listed in column 3 Code Assessable If not self-assessable	■ Acceptable Solutions on section 5.13.8 of the Landslide Hazard Overlay Code. ■ Landslide Hazard Overlay Code
On-site raising or relocating of an existing dwelling unit	Self- Assessable If complying with the assessment criteria being the acceptable solutions listed in column 3 Code Assessable If not self-assessable	■ Acceptable Solutions on section 5.13.8 of the Landslide Hazard Overlay Code. ■ Landslide Hazard Overlay Code
Private Swimming Pool	Self- Assessable If complying with the assessment criteria being the acceptable solutions listed in column 3 Code Assessable If not self-assessable	■ Acceptable Solutions on section 5.13.8 of the Landslide Hazard Overlay Code. ■ Landslide Hazard Overlay Code

[5.66] See Schedule 3 – Dictionary, Division 2 – Administrative Terms for a definition of level of assessment.
[5.67] Whether or not having a Community Management Statement.

Column 1	Column 2	Column 3
Other Development	**Level of Assessment**[5.66]	**Assessment Criteria**
Private Tennis Court	Self- Assessable If complying with the assessment criteria being the acceptable solutions listed in column 3 Code Assessable If not self-assessable	■ Acceptable Solutions on section 5.13.8 of the Landslide Hazard Overlay Code. ■ Landslide Hazard Overlay Code
Private Waterfront Structure	Self- Assessable If complying with the assessment criteria being the acceptable solutions listed in column 3 Code Assessable If not self-assessable	■ Acceptable Solutions on section 5.13.8 of the Landslide Hazard Overlay Code. ■ Landslide Hazard Overlay Code
Operational Work for -		
Excavation and Fill	Self- Assessable If complying with the assessment criteria being the acceptable solutions listed in column 3 Code Assessable If not self-assessable	■ Acceptable Solutions on section 5.13.8 of the Landslide Hazard Overlay Code. ■ Landslide Hazard Overlay Code
Operational Works for Reconfiguring a Lot by (Standard Format Plan)	Code Assessable	■ Landslide Hazard Overlay Code
All other development not listed in column 1	Exempt	

5.13.6 Compliance with the Landslide Hazard Overlay Code

(1) Development that is consistent with the following complies with the Landslide Hazard Overlay Code –

(a) acceptable solutions in section 5.13.8 where self-assessable development; or

(b) specific outcomes in section 5.13.9 where assessable development.

Note -

Planning Scheme Policy 15 – Landslide Hazard will assist in achieving the requirements of the Landslide Hazard Overlay Code.

5.13.7 Overall Outcomes of the Landslide Hazard Overlay Code

(1) The overall outcomes are the purpose of the Landslide Hazard Overlay Code.

(2) The overall outcomes sought for the Landslide Hazard Code are the following –

(a) to limit the extent of uses and other development to an appropriate level, relative to the area's landslide hazard risk;

(b) to minimise the landslide hazard risk to people and property through the appropriate siting, design and management of development and issues.

5.13.8 Acceptable Solutions applicable to Self-Assessable Development

Self-Assessable Development	
Acceptable Solutions	
A1.	(1) Uses and other development – (a) are located on that part of the lot or premises not shown on this overlay map; or (b) where in the Low Landslide Hazard Management Overlay Area and not involving community infrastructure are of pole, pier or multiple slab design that allow the structures to step down the slope (refer to Diagram 1 below).

Diagram 1 – Example of Better Practice Development of Steep Hillsides

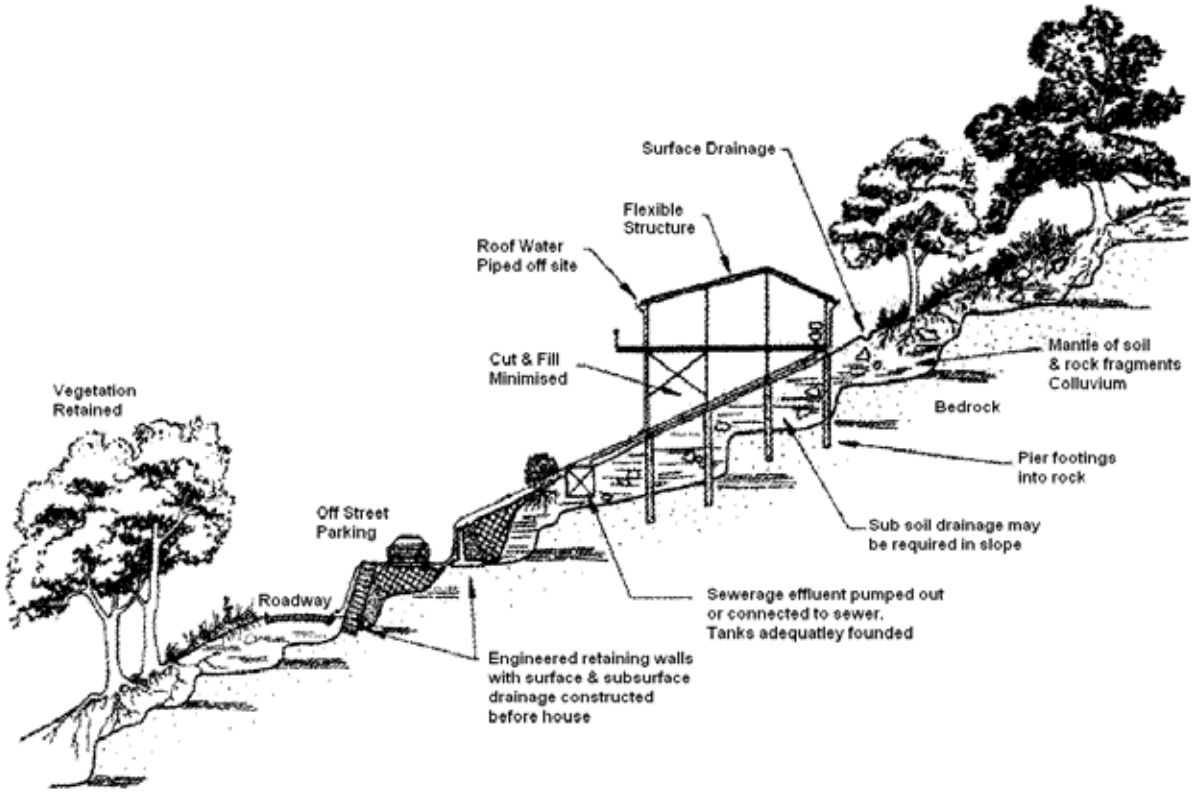

5.13.9 Specific Outcomes and Probable Solutions applicable to Assessable Development

Assessable Development			
Specific Outcomes		**Probable Solutions**	
S1.	Where proposed on a lot or premises shown on this overlay map (1) All uses and other development do not create or increase the landslide hazard risk to that land or adjoining through – (a) built form; (b) slope; (c) the extent of vegetation removal; (d) soil type and stability; (e) earthworks; (f) alteration of existing groundwater or surface water flow paths; (g) waste water disposal areas; (h) environmental values.	**P1.**	(1) No probable solution identified. **Note -** (1) To assist in achieving S1, the proposed development is to be supported by a geotechnical report that has been undertaken in accordance with - (a) section 15.6.1, Planning Scheme Policy 15 – Landslide Hazard for Very High Hazard areas; (b) section 15.6.2, Planning Scheme Policy 15 – Landslide Hazard for High Hazard areas; (c) section 15.6.3, Planning Scheme Policy 15 – Landslide Hazard for Moderate Hazard areas.
S2.	Community Infrastructure (1) The community infrastructure is able to function effectively during and immediately after landslide events.	**P2.**	(1) The community infrastructure – (a) is not located in a Moderate, High or Very High Landslide Management Area as shown on this overlay map; or (b) where there are no alternative sites outside of the Landslide Hazard Management Area, is located within the Low Landslide Hazard Management Area. **Note -** Where community infrastructure cannot be located outside the Moderate, High or Very High Landslide Hazard Management Areas, locating community infrastructure in these areas may be considered where - (1) the community infrastructure development - (a) does not result in any new building work other than an addition to an existing building; (b) does not involve vegetation clearing; (c) does not alter ground levels or stormwater conditions; (2) the development includes measures that ensure - (a) the long term stability of the site; (b) access to the site will not be impeded by a landslide event;

			Note – (Cont.) (c) the community infrastructure will not be adversely affected by landslides originating on sloping land above the site. To assist in achieving S2 refer to Planning Scheme Policy 15 – Landslide Hazard.

Part 6 - Use Codes

Note -

Summary of Use Codes

Residential Use Codes

- Aged Persons and Special Needs Housing
- Apartment Building
- Caretakers Dwelling
- Display Dwelling
- Dual Occupancy
- Dwelling House
- Home Business
- Mobile Home Park
- Multiple Dwelling
- Relatives Apartment
- Small Lot House

Tourist Accommodation Use Codes

- Bed and Breakfast
- Tourist Accommodation
- Tourist Park

Rural Use Codes

- Agriculture
- Animal Keeping
- Forestry
- Intensive Agriculture
- Roadside Stall
- Rural Enterprise

Commercial Use Codes

- Drive Through Restaurant
- Service Station

Industrial Use Codes

- Extractive Industry

Community Use Codes

- Child Care Centre

Sport and Recreation Use Codes

- Park

Infrastructure Use Codes

- Telecommunications Facility

Other Use Codes

- Estate Sales Office
- Outdoor Dining
- Temporary Use

Note -

All other defined uses are assessed against zone, other development and general codes as they do not have individual use codes.

this page purposely
left blank

Division 1 - Aged Persons and Special Needs Housing

6.1.1 Introduction

(1) This division contains the provisions for the Aged Persons and Special Needs Housing Code, that incorporates -

(a) Compliance with the Aged Persons and Special Needs Housing Code (section 6.1.2);

(b) Overall Outcomes of the Aged Persons and Special Needs Housing Code (section 6.1.3);

(c) Specific Outcomes and Probable Solutions applicable to Assessable Development (section 6.1.4).

6.1.2 Compliance with the Aged Persons and Special Needs Housing Code

(1) Development that is consistent with the specific outcomes of section 6.1.4 complies with the Aged Persons and Special Needs Housing Code.

Note -

Part 11 - Planning Scheme Policy 8 - Housing will assist in achieving specific outcomes within the Aged Persons and Special Needs Housing Code.

6.1.3 Overall Outcomes of the Aged Persons and Special Needs Housing Code

(1) The overall outcomes are the purpose of the Aged Persons and Special Needs Housing Code.

(2) The overall outcome sought for the Aged Persons and Special Needs Housing Code is the following -

(a) to ensure the use -

(i) provides a greater range of housing types for the community;

(ii) provides easy access to health, social and recreational facilities which are designed to meet resident needs;

(iii) is designed and sited to provide for a high quality living environment that caters specifically for its expected residents;

(iv) maintains a high standard of residential amenity;

(v) complements the character of the surrounding area.

6.1.4 Specific Outcomes and Probable Solutions applicable to Assessable Development

Assessable Development			
Specific Outcomes		**Probable Solutions**	
S1.	Location - (1) The use is located on land that is within close proximity to centres, community services and facilities and public transport; (2) The use is located on land that has a gradient that is appropriate to the use.	**P1.**	(1) The use - (a) is located within 400 metres of a bus stop and/or 800 metres of a railway station or centre; or (b) provides a chemist, hairdresser, convenience shopping, posting facility, public telephone and basic medical services on-site; (c) provides a bus service to higher order shopping and medical facilities; (2) The use is located on a lot or premises where at least 50 percent of the site has a slope not exceeding 1 in 14. **Note -** Refer to the relevant zone code to establish if the use is consistent with that zone.
S2.	Site Size and Density (1) The use is on a lot or premises that is sufficient in size to provide for the needs of this housing type.	**P2.**	(1) The use - (a) complies with the lot size and frontage criteria for the use as detailed in Part 9 - Schedule 5 - Lot Sizes - Table 1 - Use Lot Size; (b) has a density consistent with the relevant zone code.
S3.	Site Layout and Building Design - (1) Layout and design enhances built form of the surrounding streetscape by - (a) contributing to the establishment of an attractive streetscape in new areas; (b) ensuring the use addresses the street frontage; (c) varying the built form appearance of each dwelling unit to create a sense of individual identity within an integrated and coordinated design and layout; (d) reducing building bulk by a combination of verandahs, recesses and variation in materials and building form;	**P3.**	(1) The use complies with the following requirements - (a) building height, site coverage and setbacks are in accordance with Table 1 - Building Siting and Design Requirements; (b) the difference in building height between the use and adjoining buildings is not more than one storey when viewed from - (i) the public street; or (ii) a minimum 10 metres from the side property boundary - refer to Diagram 1; (c) buildings have no -

Assessable Development			
Specific Outcomes		**Probable Solutions**	
	(e) elevations using a variety of materials, colours and/or textures between levels; (f) roofs being pitched, articulated, gabled or provide other features to avoid single plane rooflines; (g) buildings on sloping sites being designed to produce a stepped pattern involving roof ridges, guttering, balustrade and floor levels; (h) where the built form is taller or wider than the type of buildings expected in the street, the use is articulated into clearly distinguishable parts, similar in scale to existing housing so that individual dwelling units can be identified from the street/accessway; (i) ensuring building height and site coverage is consistent with the proposed height and scale in the locality; (j) ensuring setbacks complement the existing streetscape and maximise private open space areas, privacy, solar access and provide for service areas; (k) ensuring the streetscape is not affected by multiple access points or the dominance of garages.		(i) unbroken elevation greater than 2 storeys on any vertical plane; (ii) unbroken walls 15 metres in length; (d) where incorporating individual dwelling units, access is provided from an internal street. (e) solar access to habitable rooms and private open space of adjoining dwelling units - (i) is not reduced to less than 3 hours between 9am and 3pm on June 21; or (ii) where existing overshadowing by building and fences is greater than this, sunlight is not reduced by a further 20 percent **Note -** Refer to Part 11 - Planning Scheme Policy 8 - Housing, specifically the section on Site Development Plan, Site Analysis Plan and Streetscape Analysis.
S4.	Visual Privacy - (1) Privacy between dwelling units on the site and adjoining sites is achieved by effective building design and the location of windows to prevent overlooking into habitable rooms or private open space areas. **Note -** ■ The effective location of windows and balconies to avoid overlooking is preferred to the use of screening devices. Where these are used, they should be integrated with the building design and have minimal negative affect on the resident's or neighbour's amenity. ■ Refer to Diagram 2 and 3.	**P4.**	(1) The use complies with the following - (a) where habitable room windows are directly adjacent to habitable rooms of adjoining dwelling units and are within a distance of 6 metres and within an angle of 45 degrees, privacy is protected by - (i) sill heights being a minimum of 1.5 metres above floor level; or (ii) providing fixed translucent, such as frosted or textured glazing for any part of the window below 1.5 metres above floor level; or (iii) providing fixed external screens;

Assessable Development			
Specific Outcomes		Probable Solutions	
			(b) where incorporating screening devices they are - (i) solid translucent screens; or (ii) perforated panels or trellises that have a maximum of 25 percent openings, with a maximum opening dimension of 50mm and that are permanently fixed and durable; (iii) offset a minimum of 300mm from the wall of the building; (c) outlook from windows, balconies, stairs, landings, terraces and decks and other private areas, is obscured or screened where a direct view is available into the private open space of another dwelling unit by - (i) providing screening devices as detailed in P4.(1)(a) and (b); or (ii) incorporating existing or new landscape planting that will achieve 2 metres in height at maturity.
S5.	Acoustic Amenity - Siting and design achieves a high level of amenity for occupants by minimising impacts from noise generating areas, such as streets, driveways, car parking areas, service areas, private and communal open space areas and mechanical equipment.	**P5.**	No probable solution identified. **Note -** Shared walls and floors between dwellings are constructed in accordance with the noise transmission and insulation requirements of the *Building Code of Australia (1996)*.
S6.	Landscaping - (1) Landscape design contributes to a pleasant, safe and attractive living environment by - (a) retaining existing mature trees; (b) using plants that are native to the area; (c) enhancing privacy and amenity; (d) ensuring surveillance to communal open space areas and pedestrian paths; (e) enhancing climatic conditions; (f) emphasising clear pedestrian entry points that offer good visibility along paths and	**P6.**	(1) The use incorporates the following landscaping - (a) 15 percent of the total site area is planted/grassed landscaping, rather than hardstand, in addition to open space requirements; (b) a 2 metre planted area is provided, in communal or private gardens, along the length of any public road frontage; (c) fences forward of the building frontage - (i) are not more than -

Assessable Development			
Specific Outcomes		**Probable Solutions**	
	driveways; (g) being used to frame views and view corridors through the main pedestrian pathways of the site; (h) incorporating semi-transparent fencing and planted landscaping as a buffer between communal areas and private open space areas; (i) not blocking or interrupting overland flow paths.		a. 1.2 metres in height above ground level where of solid construction; or b. 1.8 metres in height above ground level where the fence is at least 30 percent transparent - refer to Diagram 4; (ii) where exceeding 10 metres in length - are articulated or detailed to provide visual interest; (d) where the side or rear boundaries adjoin public open space, fences are a maximum of 1.2 metres in height; (e) where the front fence is lower than the side boundary fence, it is tapered to the maximum height of the side boundary fence at or behind the front building line; (f) internal fences do not exceed 1.2 metres in height.
S7.	Open Space Design - (1) Open space - (a) includes clearly designated private open space areas that provides privacy for residents; (b) includes communal open space areas that are functional and accessible; (c) is of a useable size and dimension; (d) is of a suitable slope; (e) is directly accessible from the main living area for private open space; (f) is capable of receiving sufficient sunlight; (g) is located behind the building frontage, and where above ground protects the privacy of adjoining and nearby dwellings; (h) provides easy access to communal areas by the elderly and persons with a disability and promotes formal and informal social interaction. **Note -** Communal buildings should be sited to provide opportunities for controlled access by community groups.	**P7.**	(1) 20 percent of the site is provided as open space at ground level and consists of - **Note -** This area can contain private and communal open space areas. (a) for each dwelling unit - provides a designated private open space area that - (i) where independent units - a. at ground level - are a minimum of 25m^2 with a minimum dimension of 4 metres; or b. above ground level - are a minimum of 10m^2 with a minimum dimension of 2.5 metres; (ii) where semi-independent units - are a minimum of 8m^2 with a minimum dimension of 2.5 metres; (iii) is directly accessible from the main living area; (iv) receives at least 3 hours of sunlight between 9am and 3pm on June 21 over

Assessable Development			
Specific Outcomes		**Probable Solutions**	
			100 percent of the area; (v) is orientated within 20 degrees of north; (b) where including 10 or more dwelling units, a communal open space area is provided with a minimum - (i) outdoor area of 10 percent of the site area and a minimum dimension of 15 metres located in the one area; (ii) indoor rate per resident of - a. where independent units - $3m^2$; b. where semi-independent units - $6m^2$; c. where dependent units - $2m^2$; (c) the finished surface for private and communal open space areas at ground level is not steeper than 1 in 14; (d) communal facilities, including outdoor recreation areas are accessed by pedestrian paths from individual dwelling units and/or buildings containing groups of dwelling units; (e) communal indoor areas - (i) provide essential facilities, including toilets, kitchen/tea making facilities and storage areas; (ii) are accessible by people with a disability.
S8.	Access and Parking - (1) Accessways, individual driveways and vehicle parking - (a) is safe and convenient for residents and visitors; (b) has an appropriate number of car parking spaces to cater for employees, residents and visitors; (c) does not dominate the streetscape or building form when viewed from the street; (d) is compatible with the overall building design in terms of height, roof form, detail, materials and colour; (e) are designed to incorporate adequate waste collection manoeuvring and service	**P8.**	(1) The use complies with - (a) the car parking space criteria as detailed in Part 9 - Schedule 1 - Access and Parking - Table 1 - Minimum On-site Vehicle Parking Requirements; (b) any garages are located behind the front building façade; (c) the maximum straight alignment of any driveway is 20 metres; (d) driveways to individual dwelling units are - (i) finished in non-slip materials; (ii) have a maximum slope of

Assessable Development			
Specific Outcomes		**Probable Solutions**	
	areas; (f) incorporates landscaping to minimise the expanse of hard surfaces; (g) are clearly distinguished from pedestrian entries and paths through design, finish or location; (h) for semi-dependent and dependent units are provided in coordinated manner and integrated within the building design; (i) are surfaced with materials that provide stormwater infiltration; or (j) are designed to drain to adjacent landscaped areas, other than turning areas.		1 in 8; (iii) accommodate a tandem car park space within the property boundary. (e) waste collection vehicles enter and exit the site in a forward gear.
S9.	Internal Pedestrian Paths - (1) The pedestrian movement system - (a) enables residents to easily navigate the site on foot or with the assistance of mobility aids; (b) incorporates protected walkways, particularly those linking dwelling units with communal facilities; (c) provides comfortable vantage points to rest, socialise and observe surrounding activities; (d) provides a variety of circulation options; (e) links with external pedestrian and cycle paths.	**P9.**	(1) Internal pathways - (a) are a width of 2 metres extending to 3.5 metres when combined with a seating area; (b) comply with *Australian Standard 1428.1-4: 2001 - Design for Access and Mobility*; (c) have a firm, level, well drained non-slip surface; (d) provide handrails where there are grade changes or other areas of potential risk to pedestrians; (e) provide a covered principal walkway that links all on-site communal facilities.
S10.	Safety and Security - (1) Site layout, building design and lighting - (a) maximises safety and security of residents; (b) provides for casual surveillance of communal areas, car parking areas and pedestrian paths.	**P10.**	(1) Maximise safety and security by including - (a) movement sensitive lighting that is directed towards pedestrian and vehicle entry and exit points and communal areas and complies with the provisions of *Australian Standard 4282: 1997 - Control of the obtrusive effects of outdoor lighting* - refer to Diagram 5; (b) dwelling unit design that allows visitors who approach the front door to be seen without the need to open the door - refer to Diagram 5; (c) above ground private open

Assessable Development			
Specific Outcomes		**Probable Solutions**	
			space areas that overlook internal and external streets or communal open space areas. **Note -** To assist in achieving S10. refer to Planning Scheme Policy 16 - Safer By Design.
S11.	Service Facilities - (1) Service facilities are provided to meet the needs of residents and are sited and designed in an unobtrusive and convenient manner. (2) An on-site waste collection system has - (a) an internal road network allowing the waste collection vehicle to service wheelie bins from independent dwelling units; or (b) an internal bulk bin collection system to service semi-independent or dependent units.	**P11.**	(1) The use incorporates service facilities which are designed and located having regard to the following - (a) open air clothes drying facilities are provided in sunny, ventilated and convenient locations that are screened from view from the street, internal driveway and communal open space areas; (b) where more than 25 percent of dwelling units do not have access to ground floor level private open space, mechanical dryers and/or communal open space drying facilities are provided in locations that are easily accessed by a number of dwelling units; (c) service structures and mechanical plant are designed as an architectural feature of the building or are effectively screened from view; (d) one bunded car washing bay is provided; (e) fire hydrant installation is consistent with the requirements of *Australian Standard 2419.1: 1996 - Fire Hydrant Installation;* (f) depending on the waste collection system provided - (i) allow for on-site centralised collection; (ii) sufficient on-street collection; (iii) an internal road network that allows the waste collection vehicle to service individual dwelling units; (g) a waste compound is located in a hardstand impermeable

Assessable Development			
Specific Outcomes		**Probable Solutions**	
			area and is screened and landscaped to blend in with the surrounds; (h) individual independent dwelling units are provided with storage space that achieves the following minimum requirements - (i) lockable external accessible area of $3m^2$; (ii) height of 2.1 metres; (iii) screened from public view. **Note -** ■ This space may form part of a carport or garage. ■ Storage areas are exclusive of private open space areas. (2) No probable solution identified. **Note -** Refer to Part 11 – Planning Scheme Policy 9 – Infrastructure Works – Chapter 16 – Waste Management for further information on waste and recycling container volume, storage, servicing, screening and cleansing.
S12.	Reflectivity – (1) The use does not incorporate any type of glass or other surface likely to reflect light that would create undue nuisance, discomfort or hazard to residence within the use or in surrounding areas.	**P12.**	(1) Any reflective glass material has - (a) a level of light reflectivity of not greater than 20 percent; (b) a level of heat transmission of not greater than 20 percent.
S13.	Emergency Services - Dwelling units and communal facilities are directly accessible by emergency service vehicles.	**P13.**	No probable solution identified.

Table 1 - Building Siting and Design Requirements

	Requirement
Overall Building Height	As specified in relevant zone code
Floor Height of Highest Habitable Room	(1) As specified in relevant zone code; or (2) As specified in Table 2 - Maximum Height to the Top of the Floor Level of Highest Habitable Room
Site Coverage	(1) A maximum of - (a) in the Urban Residential Zone - sub-areas UR1 and UR2 - (i) 1 storey - 35 percent; or (ii) 2 storey - 30 percent; or (b) in the Medium Density Residential Zone - 40 percent; or (c) in the Medium Density Residential Zone - sub-areas MDR1 and MDR2 - 45 percent; or (2) As specified in relevant zone code
Front Setback	A minimum of 6 metres
Side Setback	(1) A minimum of - (a) in the Urban Residential Zone - sub-areas UR1 and UR2 - (i) 1.5 metres on ground floor; (ii) 6 metres on 2nd or 3rd storey, or 4 metres where window sills are 1.5 metres above floor level and balconies are screened; or (b) in the Medium Density Residential Zone - (i) where the building is - a. less than 4.5 metres in height - 1.5 metres; b. between 4.5 metres and 7.5 metres in height - 2 metres; c. greater than 7.5 metres in height - 2 metres plus 0.5 metres for every 3 metres or part thereof by which the building exceeds 7.5 metres; (c) in the above Zones and where open space is located in the side setback - (i) 4 metres for the extent of private open space; (ii) 15 metres for the extent that communal open space; or (d) as specified in relevant zone code
Rear Setback	(1) A minimum of - (a) in the Urban Residential Zone - sub-areas UR1 and UR2 - (i) 4 metres on ground floor; (ii) 6 metres on 2nd storey or 4 metres where window sills are 1.5 metres above floor level and balconies are screened; or (b) in the Medium Density Residential Zone - 4 metres; (c) in the above zones and where open space is located in the side setback - (i) 4 metres for the extent of private open space; (ii) 15 metres for the extent of communal open space

Table 2 - Maximum Height to the Top of the Floor Level of Highest Habitable Room

Location		Maximum Height to the Top of the Floor Level of Highest Habitable Room
General		
Urban Residential Zone - sub-areas UR1 and UR2		3.5 metres (2 storey)
Medium Density Residential Zone - other than sub-area MDR1 and a number of MDR3 sites		7 metres (3 storey)
Medium Density Residential Zone - sub-area MDR1 sites		
Capalaba - Refer to Map 1/5 of Medium Density Residential Zone Code		
1	Moreton Bay Road, Pittwin Road North	16 metres (6 storey)
2	Mount Cotton Road	13 metres (5 storey)
Cleveland - Refer to Map 2/5 of Medium Density Residential Zone Code		
3	Haggup Street, Queen Street, Waterloo Street	13 metres (5 storey)
4	Michelle Court	13 metres (5 storey)
5	Shore Street, Middle Street, Island Street	13 metres (5 storey)
6	Channel Street, Shore Street, Middle Street	16 metres (6 storey)
7	Passage Street	13 metres (5 storey)
8	Queen Street, Passage Street, Middle Street	7 metres (3 storey)
9	Middle Street, Shore Street, Wharf Street	13 metres (5 storey)
10	Wharf Street, Shore Street, Middle Street	13 metres (5 storey)
11	North Street, Shore Street East	7 metres (3 storey)
Redland Bay - Refer to Map 3/5 of Medium Density Residential Zone Code		
12	Boundary Street, Broadwater Terrace, Esplanade, Stradbroke Street	7 metres (3 storey)
13A	Hamilton Street, Esplanade, Peel Street	13 metres (5 storey)
13B	Hamilton Street, Esplanade, Peel Street	7 metres (3 storey)
14	Gladstone Street, Peel Street and Broadwater Terrace	7 metres (3 storey)
15	Weinam Street, Banana Street, Outridge Street, Hamilton Street, Meissner Street	7 metres (3 storey)
Coochiemudlo Island - Refer to Map 4/5 of Medium Density Residential Zone Code		
16	Victoria Parade	7 metres (3 storey)
Medium Density Residential Zone - sub-area MDR3 sites		
Redland Bay - Refer to Map 5/5 of Medium Density Residential Zone Code		
17	Salisbury Street	8 metres (3 storey)
18	Salisbury Street	7 metres (3 storey)
19	Salisbury Street	(2 storey)
20	Salisbury Street	(1-3 storey)
21	Salisbury Street	(1 storey)

Diagram 1 - Height between adjoining uses

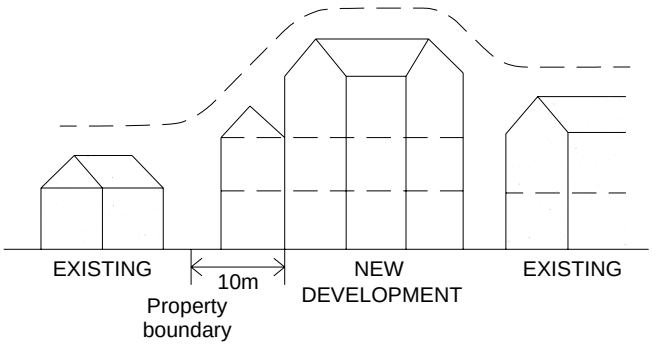

Diagram 2 -Techniques to reduce overlooking

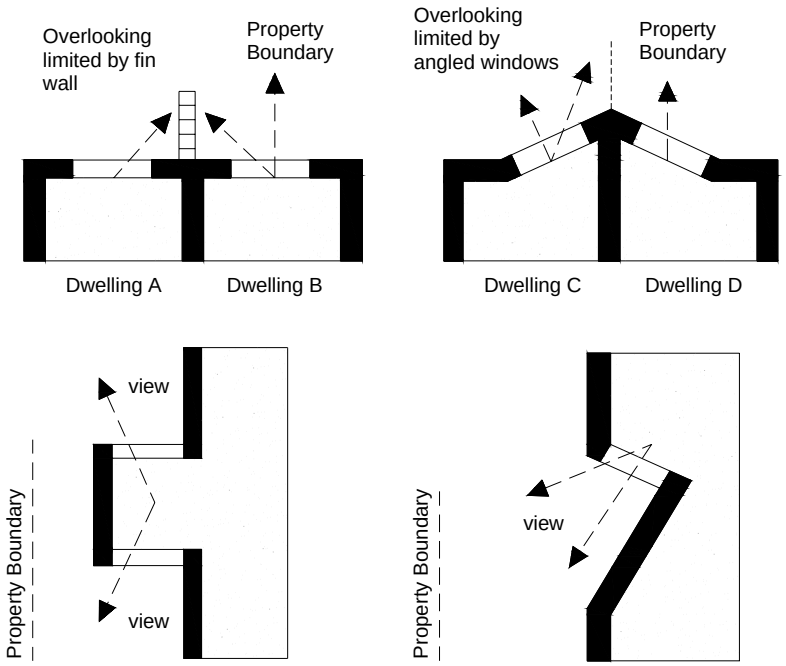

View obscured by placing windows at right angles to the boundary

View obscured by placing windows at angle to the boundary

Diagram 3 - Situations where screening is required

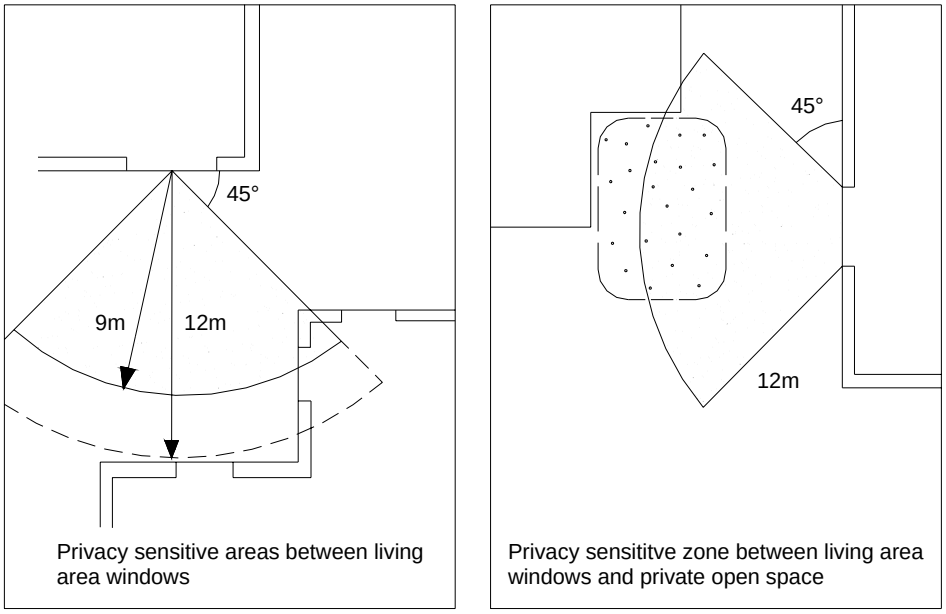

Privacy sensitive areas between living area windows

Privacy sensititve zone between living area windows and private open space

Diagram 4 - Front Fencing Design

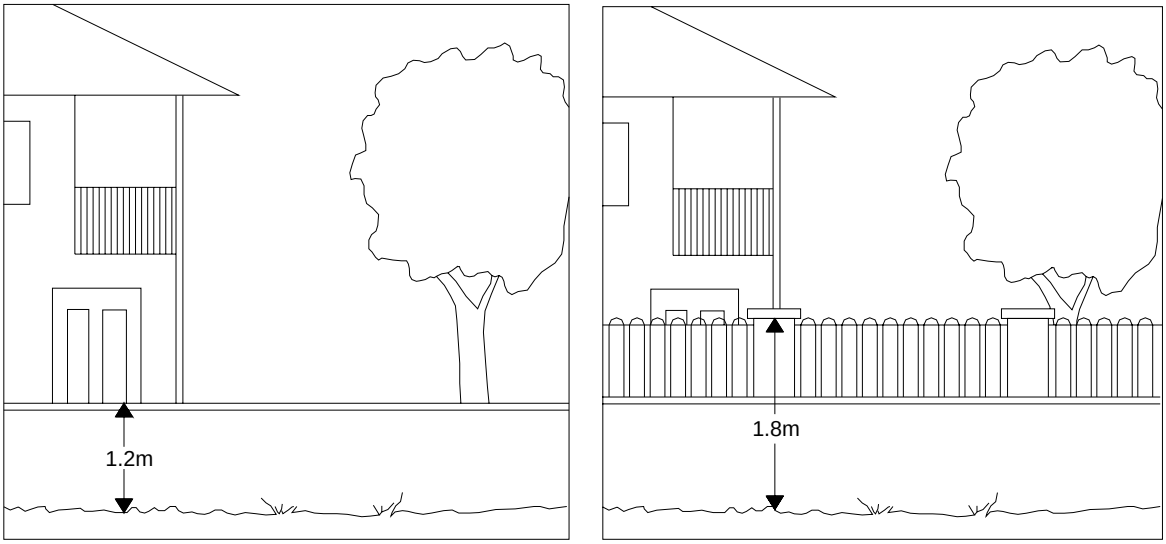

Diagram 5 - Design for casual surveillance

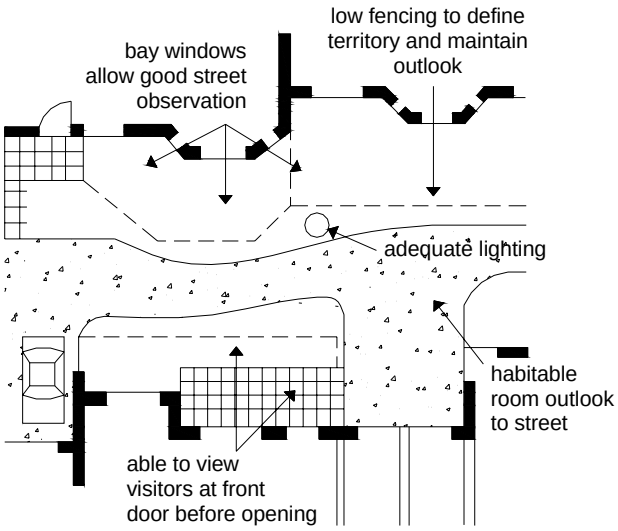

Aged Persons and Special Needs Housing

this page purposely
left blank

Division 2 - Agriculture

6.2.1 Introduction

(1) This division contains the provisions for the Agriculture Code, that incorporates -

(a) Compliance with the Agriculture Code (section 6.2.2);

(b) Overall Outcomes of the Agriculture Code (section 6.2.3);

(c) Acceptable Solutions applicable to Self-Assessable Development (section 6.2.4);

(d) Specific Outcomes and Probable Solutions applicable to Assessable Development (section 6.2.5).

6.2.2 Compliance with the Agriculture Code

(1) Development that is consistent with the following complies with the Agriculture Code -

(a) acceptable solutions in section 6.2.4 where self-assessable development; or

(b) specific outcomes in section 6.2.5 where assessable development.

Note -

The following planning scheme policies will assist in achieving specific outcomes within the Agriculture Code -

- Planning Scheme Policy 4 - Ecological Impacts;
- Planning Scheme Policy 5 - Environmental Emissions;
- Planning Scheme Policy 11 - Rural Lands and Uses.

6.2.3 Overall Outcomes of the Agriculture Code

(1) The overall outcomes are the purpose of the Agriculture Code.

(2) The overall outcome sought for the Agriculture Code is the following -

(a) to ensure the use -

(i) supports the ongoing operation of agricultural activities;

(ii) minimises impacts on the premises, surrounding properties and environmental values.

6.2.4 Acceptable Solutions applicable to Self-Assessable Development

Self-Assessable Development	
Acceptable Solutions	
A1.	(1) Buildings and structures associated with the use do not exceed 10 metres in height above ground level; (2) The use is not an Environmentally Relevant Activity, as defined in the *Environmental Protection Act 1994*; (3) Outdoor activities associated with the use are located a minimum of 300 metres from a sensitive receiving environment, other than that on the subject lot or premises; (4) Noise emissions comply with Table 1 - Noise Levels at the Boundary of the Premises.

6.2.5 Specific Outcomes and Probable Solutions applicable to Assessable Development

Assessable Development			
Specific Outcomes		**Probable Solutions**	
S1.	Location - (1) The use is consistent with the land capability including - (a) topography; (b) soil conditions; (c) climate; (d) environmental values; (e) infrastructure services; (f) a reliable water supply and the capacity to store water for a minimum of 2 days; (g) where located in the Environmental Protection Zone - a maximum of 10 percent of the site is used for agriculture purposes.	**P1.**	(1) No probable solution identified. **Note -** Refer to the relevant zone code to establish if the use is consistent with that zone.
S2.	Site Size - (1) The use is carried out on a lot or premises which is of a size and shape that - (a) is consistent with the amenity of the surrounding area and adjoining uses; (b) allows for the setback of activities from property boundaries, dwellings, waterways, wells or bores and sensitive receiving environments.	**P2.**	(1) The use is conducted on a lot or premises with an area greater than $4000m^2$.
S3.1	Site Layout and Building Design - (1) The use - (a) protects the surrounding landscape setting and character;	**P3.1**	(1) The use - (a) complies with the noise levels detailed in Table 1 - Noise Levels at the Boundary of the

Agriculture

Assessable Development			
Specific Outcomes		**Probable Solutions**	
	(b) minimises impacts on nearby residential uses by managing the generation of - (i) noise; (ii) dust, smoke and ash emissions; (iii) chemical spray drift; (c) protects environmental values.		Premises; (b) where adjoining a residential zone - is located in accordance with Table 2 - Summary of Buffer Area Design Criteria; (c) where incorporating a buffer area, includes a minimum - (i) 20 metre wide planted area; (ii) 10 metre wide access strip on both sides of the planted area, that is kept clear of vegetation and other flammable materials - refer to Diagram 1; (d) locates livestock yards or enclosures associated with the agricultural use a minimum of 50 metres from any dwelling unit on the premises; (e) incorporates handling, storing and/or packing of produce only where ancillary to the agricultural use of the premises. **Note -** Refer to Planning Scheme Policy 11 - Rural Lands and Uses for details on height and density of vegetated buffers.
S3.2	(1) Where required, fencing does not inhibit the movement of native animals - (a) within the lot or premises; (b) to external areas.	**P3.2**	(1) No probable solution identified. **Note -** Refer to Planning Scheme Policy 4 - Ecological Impacts for specific fauna friendly fencing criteria.
S3.3	Outdoor activities minimise nuisance to sensitive receiving environments on adjoining or nearby properties.	**P3.3**	Outdoor activities are located a minimum of 300 metres from a sensitive receiving environment.
S4.	Property Management Plan - The long-term intentions and management objectives of the use are clearly identified and any potential conflicts or environmental impacts are avoided or minimised.	**P4.**	No probable solution identified. **Note -** To achieve this specific outcome, a property management plan is prepared in accordance with Planning Scheme Policy 11 - Rural Lands and Uses.

Table 1 - Noise Levels at the Boundary of the Premises

Period	Noise Level at the Boundary of the Premises[1]
7am - 10pm	Background noise level plus 8 dB (A)
10pm - 7am	Background noise level plus 5 dB (A)

Note[1] - Measured as the adjusted maximum sound pressure level $L_{Amax,adj,T}$ as defined in the *Noise Measurement Manual* (Environmental Protection Agency, 2000)

Table 2 - Summary of Buffer Area Design Criteria

	Minimum Default Distance	Minimum Design Distance with Buffer Element
Chemical Spray Drift	300 metres	40 metres
Dust Smoke and Ash	150 metres	40 metres

Diagram 1 - Buffer Area Design

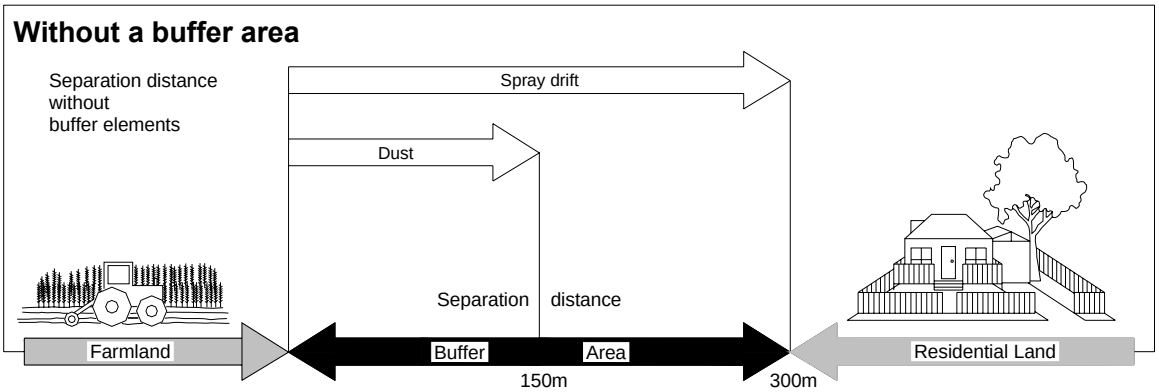

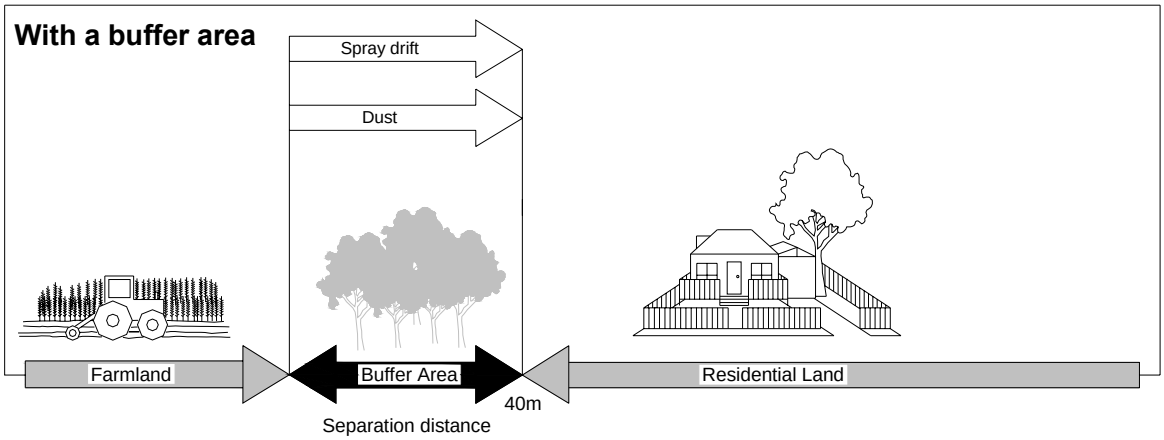

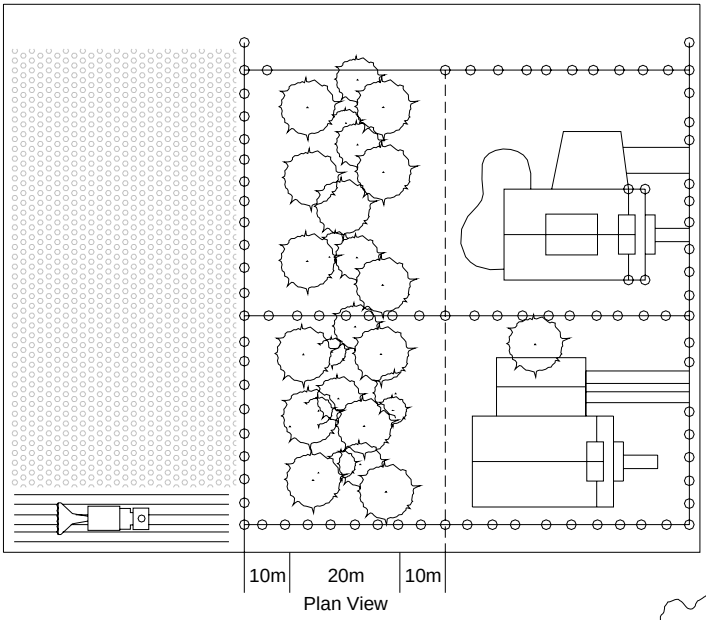

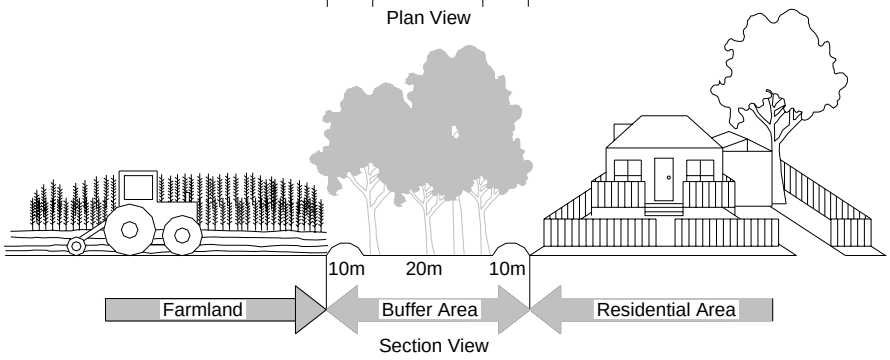

Agriculture

this page purposely
left blank

Division 3 - Animal Keeping

6.3.1 Introduction

(1) This division contains the provisions for the Animal Keeping Code, that incorporates -

(a) Compliance with the Animal Keeping Code (section 6.3.2);

(b) Overall outcomes for the Animal Keeping Code (section 6.3.3);

(c) Specific Outcomes and Probable Solutions applicable to Assessable Development (section 6.3.4).

6.3.2 Compliance with the Animal Keeping Code

(1) Development that is consistent with the specific outcomes of section 6.3.4 complies with the Animal Keeping Code.

Note -

- Animal keeping does not include the keeping of companion pets where associated with a dwelling unit. In this instance refer to *Local Law No. 2 - Keeping and Control of Animals*.
- Planning Scheme Policy 5 - Environmental Emissions should be referenced for guidance on complying with the requirements of this Code.

6.3.3 Overall Outcome of the Animal Keeping Code

(1) The overall outcome is the purpose of the Animal Keeping Code.

(2) The overall outcome sought for the Animal Keeping Code is the following -

(a) to ensure the use -

(i) provides for the commercial keeping, breeding, training or boarding of companion animals such as cats, dogs, horses, caged birds;

(ii) is of a size and scale that maintains the landscape setting of the surrounding area;

(iii) is located on a lot or premises that is of a size and configuration capable of accommodating the use;

(iv) is located and designed -
a. to integrate with the existing built form, topography and landscape setting of the locality;
b. maintains amenity of the site and locality;

(v) controls noise and odour to maintain the amenity of adjoining and nearby properties;

(vi) protects animals from vermin, wind, rain, sun and extreme weather conditions;

(vii) provides adequate facilities for the collection and disposal of animal waste.

6.3.4 Specific Outcomes and Probable Solutions applicable to Assessable Development

Assessable Development			
Specific Outcomes		**Probable Solutions**	
S1.1	The scale of the use maintains the landscape setting of the surrounding area.	**P1.1**	No probable solution identified. **Note -** Refer to the relevant zone code to establish if the use is consistent with that zone.
S1.2	The siting of the use requires minimal alteration to ground levels.	**P1.2**	The use is situated on land with a slope less than 10 percent (1 in 10). **Note -** The local government recognises that ground levels may require alteration in order to assist in acoustic attenuation. Where the site requires modification to ground level refer to Part 7 - Division 6 - Excavation and Fill Code for additional requirements.
S2.1	(1) The use is located on a lot or premises that is of a size and configuration capable of accommodating - (a) the keeping of animals consistent with the amenity of adjoining and nearby properties; (b) parking, and servicing requirements such as waste storage and collection areas; (c) landscaping; (d) adequate separation between buildings, pens, waste disposal areas and other service facilities from wells or bores, and adjoining sensitive receiving environments.	**P2.1**	(1) The use - (a) is located on a lot with a minimum area of - (i) 1 hectare for a kennel; (ii) 1 hectare for a cattery; (iii) 2 hectares for a stable; (iv) where for an aviary - lot size is determined on the number and type of birds proposed.
S2.2	(1) The layout and design of the use - (a) integrates with the existing built form, topography and landscape setting of the locality; (b) maintains the amenity of the surrounding area.	**P2.2**	(1) No probable solutions identified.
S2.3	(1) Setbacks from all external boundaries - (a) ensures the efficient use of the site; (b) maintains the visual character of the locality; (c) protects the amenity of nearby sensitive receiving	**P2.3**	(1) The use is setback in accordance with Table 1 - Minimum Setback Requirements.

Assessable Development			
Specific Outcomes		**Probable Solutions**	
	environments.		
S2.4	(1) Noise and odour levels generated by the use is compatible with that experienced in the locality; (2) The use - (a) does not have openings that face adjoining sensitive receiving environments; (b) ensures facilities that house animals incorporate noise attenuating measures; (c) ensures buildings are ventilated to minimise potential for odour nuisance.	**P2.4**	(1) No probable solution identified; (2) No probable solution identified. **Note -** ■ The design of noise barriers is consistent with the visual character of the locality and may include the use of earth mounding or materials such as brick, cement, powder coated sheet metal or plywood. ■ Refer to Planning Scheme Policy 5 - Environmental Emissions for further information.
S3.1	(1) Design and layout of access, car parking and on-site vehicle movement areas - (a) is safe and convenient; (b) ensures car parking areas are located away from animal enclosures to minimise disturbance to housed animals; (c) ensures car parking areas are adjacent to reception areas.	**P3.1**	(1) No probable solution identified.
S3.2	(1) On-site car parking caters for visitor and employee vehicle parking.	**P3.2**	(1) Car parking provision complies with Part 9 - Schedule 1 - Access and Parking, Table 1 - Minimum On-Site Vehicle Parking Requirements.
S4.1	(1) The use - (a) ensures the safe, humane and hygienic keeping, breeding, training and care of animals; (b) ensures protection of animals from wind, rain, sun, extreme weather conditions and vermin.	**P4.1**	(1) The use - (a) ensures buildings used to house animals are roofed; (b) provides facilities that are available for the isolation of animals suspected of having an infectious condition; (c) provides floors that are impermeable to assist cleaning and drainage; (d) provides animal-proof fencing immediately surrounding kennels and catteries, including pens and runs, that are - (i) a minimum of 2 metres high; (ii) constructed of mesh, chain or hinge-joint stock proof wire. **Note -** ■ Any security methods used allow for ready access to animals and ready exit for staff and animals from the premises in the event of

Assessable Development			
Specific Outcomes		**Probable Solutions**	
			an emergency. ■ Wood, brick, dirt or grass floors are not acceptable as floor materials.
S4.2	(1) The use - (a) provides an office and reception area; (b) provides facilities for record storage, and display of information for clients; (c) includes washing and toilet facilities for employees.	**P4.2**	(1) No probable solution identified.
S5.	(1) The collection and disposal of animal waste - (a) does not result in contamination of soil; (b) does not adversely impact on the quality of receiving waters; (c) minimises odour impacts on nearby sensitive receiving environments; (2) Stormwater run-off is diverted away from buildings, structures and areas used for the keeping or washing of animals and waste disposal areas.	**P5.**	(1) The use - (a) ensures solid wastes are collected and placed in weather, fly and vermin proof receptacles and disposed of by a licensed disposal service; (b) ensures drainage and disposal of liquid waste is diverted to - (i) the local government's sewerage system under the conditions of a Trade Waste Permit; or (ii) a wastewater treatment system; or (iii) a holding tank for collection by a licensed liquid waste transporter; (2) Structures used to house animals are roofed and fitted with fascia gutters in order to prevent contaminated stormwater from entering sewerage and wastewater treatment systems, or holding tanks.

Table 1 - Minimum Setback Requirements

Boundary	Kennel	Cattery	Stable	Aviary
Road Frontages	50 metres	50 metres	30 metres	Minimum setbacks depend on the number and type of bird proposed.
Side or rear boundaries	15 metres	15 metres	15 metres	
Where having a common boundary with a sensitive receiving environment	100 metres	100 metres	30 metres	

Division 4 - Apartment Building

6.4.1 Introduction

(1) This division contains the provisions for the Apartment Building Code, that incorporates -

(a) Compliance with the Apartment Building Code (section 6.4.2);

(b) Overall Outcomes of the Apartment Building Code (section 6.4.3);

(c) Specific Outcomes and Probable Solutions applicable to Assessable Development (section 6.4.4).

6.4.2 Compliance with the Apartment Building Code

(1) Development that is consistent with the specific outcomes of section 6.4.4 complies with the Apartment Building Code.

Note -

Planning Scheme Policy 8 - Housing will assist in achieving specific outcomes within the Apartment Building Code.

6.4.3 Overall Outcomes of the Apartment Building Code

(1) The overall outcomes are the purpose of the Apartment Building Code.

(2) The overall outcome sought for the Apartment Building Code is the following -

(a) to ensure the use -

(i) provides for a greater range of housing types for the community;

(ii) is designed and sited to provide for a high quality living environment;

(iii) maintains a high standard of residential amenity;

(iv) complements the character of the surrounding area.

6.4.4 Specific Outcomes and Probable Solutions applicable to Assessable Development

Assessable Development			
Specific Outcomes		**Probable Solutions**	
S1.	Location - The use is located in areas zoned for mid-rise development and is within close proximity to centres, community services and facilities and public transport.	**P1.**	No probable solution identified. **Note -** Refer to the relevant zone code to establish if the use is consistent with that zone.
S2.	Site Size and Density - (1) The use is on a lot that is consistent with the amenity of the locality and is sufficient in size to provide for the needs of the housing type.	**P2.**	(1) The use complies with - (a) the lot size and frontage criteria for the use as detailed in Part 9 - Schedule 5 - Lot Sizes - Table 1; (b) the density as detailed in the relevant zone code.
S3.	Site Layout and Building Design - (1) Layout and design enhances built form of the surrounding streetscape by - (a) contributing to the establishment of an attractive streetscape in new areas; (b) ensuring the use addresses the street frontage; (c) reducing building bulk by a combination of balconies, recesses and variations in building form and materials; (d) elevations using a variety of materials, colours and/or textures between levels; (e) roofs being pitched, articulated, gabled or provide other features to avoid single plane or flat rooflines; (f) buildings on sloping sites being designed to produce a stepped pattern involving roof ridges, guttering, balustrade and floor levels; (g) ensuring building height is - (i) consistent with development expected in the immediate locality; (ii) stepped down where adjoining an area with a lower building height requirement; (h) ensuring site coverage complements the use and provides for pedestrian and	**P3.**	(1) The use complies with the following requirements - (a) building height, site coverage and setbacks - as per Table 1 - Building Siting and Design Requirements; (b) front building elevation is - (i) parallel to the road frontage; (ii) designed so that living area windows or balconies face the street; (c) at least one prominent pedestrian entry is provided that connects to the foyer and addresses the street; (d) buildings have no unbroken elevation greater than - (i) 2-storeys on any vertical plane; or (ii) 15 metres in length. (e) solar access to habitable rooms and private open space of adjoining dwelling units - (i) is not reduced to less than 2 hours between 9am and 3pm on June 21; or (ii) where existing buildings/structures create overshadowing greater than this, sunlight is not further reduced by a 20 percent.

Assessable Development			
Specific Outcomes		**Probable Solutions**	
	vehicle access, service areas, open space areas and landscaping; (i) ensuring setbacks are compatible with the existing streetscape and maximise private open space areas, privacy, solar access and provide for service areas.		**Note -** Refer to Planning Scheme Policy 8 - Housing, specifically the section on Site Development Plan, Site Analysis Plan and Streetscape Analysis.
S4.	Visual Privacy - (1) Privacy between dwelling units on the site and adjoining sites is achieved by effective building design and the location of windows and outdoor open spaces to prevent overlooking into habitable rooms or private open space areas. **Note -** ■ A visual assessment should be sufficient to determine distance of adjacent dwelling units. ■ The effective location of windows and balconies to avoid overlooking is preferred to the use of screening devices. Where these are used, they should be integrated with the building design and have minimal negative affect on the resident's or neighbours amenity - refer to Diagram 1.	**P4.**	(1) The use complies with the following - (a) where habitable room windows are directly adjacent to habitable rooms of adjoining dwelling units and are within a distance of 6 metres and within an angle of 45 degrees, privacy is protected by - (i) sill heights being a minimum of 1.5 metres above floor level; or (ii) providing fixed translucent, such as frosted or textured glazing, for any part of the window below 1.5 metres above floor level; or (iii) providing fixed external screens - refer to Diagram 1; (b) where incorporating screening devices they are - (i) solid translucent screens; or (ii) perforated panels or trellises that have a maximum of 25 percent openings, with a maximum opening dimension of 50mm and that are permanently fixed and durable; (iii) offset a minimum of 300mm from the wall of the building; (c) outlook from windows, balconies, stairs, landings, and other private areas, is obscured or screened where a direct view is available into the private open space of another dwelling unit by - (i) providing screening devices as detailed in P4.(1)(b); or (ii) incorporating existing or

Assessable Development			
Specific Outcomes		**Probable Solutions**	
			new planted landscaping that will achieve a minimum of 2 metres in height at maturity.
S5.	Acoustic Amenity - Siting and design achieves a high level of amenity for occupants by minimising impacts from noise generating areas, such as streets, driveways, car parking areas, service areas, private and communal open space areas and mechanical equipment.	**P5.**	No probable solution identified. **Note -** Shared walls and floors between dwellings are constructed in accordance with the noise transmission and insulation requirements of the *Building Code of Australia (1996).*
S6.	Landscaping - (1) Landscape design contributes to a pleasant, safe and attractive living environment by - (a) retaining existing mature trees; (b) using plants that are native to the area; (c) enhancing privacy and amenity; (d) ensuring surveillance to communal open space areas and pedestrian paths; (e) enhancing climatic conditions; (f) emphasising clear pedestrian entry point that offer good visibility along paths and driveways; (g) incorporating semi-transparent fencing and planted landscaping as a buffer between communal areas and private open space areas; (h) not blocking or interrupting overland flowpaths.	**P6.**	(1) The use incorporates the following landscaping - (a) 2 metre planted area along the length of any public road frontage; (b) 15 percent of the site is planted/grassed landscaping, rather than hardstand, in addition to open space requirements; (c) fences forward of the building frontage - (i) are not more than - a. 1.2 metres in height above ground level where of solid construction; or b. 1.8 metres in height above ground level where the fence is at least 30 percent transparent - refer to Diagram 2; (ii) where exceeding 10 metres in length - are articulated or detailed to provide visual interest; (d) where the side or rear boundaries adjoin public open space, fences are a maximum of 1.2 metres in height; (e) where the front fence is lower than the side boundary fence, it is tapered to the maximum height of the side boundary fence at or behind the front building line; (f) internal fences do not exceed 1.2 metres in height.

Assessable Development			
Specific Outcomes		**Probable Solutions**	
S7.	Open Space Design - (1) Open space - (a) includes a clearly designated private open space area that provides privacy for residents and is directly accessible from main living areas; (b) includes communal open space areas that are functional and accessible; (c) is of a useable size and dimension; (d) is a suitable slope; (e) is capable of receiving sufficient sunlight; (f) is located behind the building frontage, and where above ground protects the privacy of adjoining and nearby properties.	**P7.**	(1) 20 percent of the site is provided as open space at ground level and consists of - **Note -** This area may contain private and communal open space areas that are at ground level. (a) for each dwelling unit - provide a designated private open space area that - (i) at ground level - is a minimum of $25m^2$ with a minimum dimension of 4 metres; or (ii) above ground level - is a minimum of $10m^2$ with a minimum dimension of 2.5 metres; (iii) is directly accessible from the main living area; (iv) receives at least 2 hours of sunlight between 9am and 3pm on June 21 over 100 percent of the area; (v) is orientated within 20 degrees of north; (b) a communal open space area located in one area and consisting of a minimum of $100m^2$ with a minimum dimension of 5 metres; (c) the finished surface for private and communal open space areas at ground level is not steeper than 1 in 14. **Note -** No probable solution is identified for communal open space provision in mixed use development - refer to Part 8 - Division 3 - Centre Design Code.
S8.	Access and Parking - (1) Accessways and vehicle parking - (a) is safe and convenient for residents and visitors; (b) has an appropriate number of car parking spaces to cater for residents and visitors; (c) does not dominate the streetscape or building form when viewed from the street; (d) is compatible with the overall	**P8.**	(1) The use complies with - (a) the car parking space criteria as detailed in Part 9 - Schedule 1 - Access and Parking - Table 1 - Minimum On-site Vehicle Parking Requirements; (b) driveways materials are non-slip and include brick, clay or concrete pavers, exposed

Assessable Development			
Specific Outcomes		Probable Solutions	
	building design in terms of height, roof form, detail, materials and colour; (e) are designed to incorporate adequate waste collection manoeuvring and service areas; (f) incorporates landscaping to minimise the expanse of hard surfaces; (g) are clearly distinguished from pedestrian entries and paths through design, finish or location; (h) are surfaced with materials that provide stormwater infiltration; or (i) are designed to drain to adjacent landscaped areas, other than turning areas; or (j) is undercover and integrated within the building design, preferably in the form of basement parking.		aggregate, stamped pigmented concrete, bitumen or permeable materials; (c) the maximum slope of a driveway does not exceed 1 in 6. (d) waste collection vehicles enter and exit the sire in forward gear.
S9.	Internal Pedestrian Paths - (1) The pedestrian movement system - (a) enables residents to easily navigate the site; (b) provides for direct access from the street and car parking building to foyer; (c) incorporates walkways to link dwelling units with communal open space; (d) provides comfortable vantage points to rest, socialise and observe surrounding activities; (e) links with external pedestrian and cycle paths; (f) is well lit; (g) has a firm, level, non-slip surface.	**P9.**	(1) Internal pathways - (a) are a width of 2 metres extending to 3.5 metres when combined with a seating area; (b) comply with *Australian Standard 1428.1-4: 2001 - Design for Access and Mobility.*
S10.	Safety and Security - (1) Site layout, building design and lighting - (a) maximises safety and security of residents; (b) provides for casual surveillance of the street, building entries, communal areas, car parking areas and pedestrian paths.	**P10.**	(1) Maximise safety and security by including - (a) movement sensitive lighting that is directed towards pedestrian and vehicle entry and exit points and communal areas that complies with the provisions of *Australian Standard 4282: 1997 - Control of the obtrusive effects of outdoor lighting*; (b) clear sight lines between the

Assessable Development			
Specific Outcomes		**Probable Solutions**	
			street and foyer entrance; (c) above ground private open space areas that overlook communal open space, external car parking areas and the street. **Note -** To assist in achieving S10. refer to Planning Scheme Policy 16 - Safer By Design.
	Service Facilities -		
S11.	(1) Service facilities are provided to meet the needs of residents and are sited and designed in an unobtrusive and convenient manner. (2) Apartments with greater than 20 units have an on-site waste collection system with - (a) sufficient waste collection vehicle manoeuvring area; (b) a centralized bulk bin storage area; (3) Infrastructure is provided to enable waste and recyclables to be collected and transported from each floor to an internal waste room.	**P11.**	(1) Services facilities and structures - (a) are designed as an architectural feature of the building or are effectively screened from view; (b) provide mechanical dryers and/or communal open space drying facilities in at least one area where more than 25 percent of dwelling units do not have access to ground floor level private open space; (c) include at least 1 bunded car washing bay; (d) include fire hydrant installation consistent with the requirements of *Australian Standard 2419.1: 1996 - Fire Hydrant Installation*; (e) include sufficient areas for the storage of waste containers and allows for collection on-site; (f) locate the waste compound in a hardstand impermeable area that is screened and landscaped to blend in with the surrounds; (g) provide individual dwelling units with storage space within car parking areas that achieves the following minimum requirements - (i) lockable external accessible area of $3m^2$; (ii) height of 2.1 metres; (iii) screened from public view. (2) No probable solution identified; (3) Waste chutes, recycling containers and hoppers are provided for the transport of waste form each floor to an internal waste and recycling storage room.

Assessable Development			
Specific Outcomes		**Probable Solutions**	
			Note - ■ Refer to Part 11 – Planning Scheme Policy 9 – Infrastructure Works – Chapter 16 – Waste Management for further information on waste and recycling container volume, storage, servicing, screening and cleansing. ■ Refer to Part 8 – Division 1 – Access and Parking for additional servicing requirements.
S12.	Reflectivity - (1) The use does not incorporate any type of glass or other surface likely to reflect light that could create undue nuisance, discomfort or hazard to residents within the use or in surrounding areas.	**P12.**	(1) Any reflective glass material has - (a) a level of light reflectivity of not greater than 20 percent; (b) a level of heat transmission of not greater than 20 percent.

Table 1 - Building Siting and Design Requirements

Standard	Requirement
Overall Building Height	As specified in relevant zone code
Floor Height of Highest Habitable Room	(1) As specified in relevant zone code; or (2) As specified in Table 2 - Maximum Height to the Top of the Floor Level of Highest Habitable Room
Site Coverage	A maximum of 45 percent
Front Setback	(1) A minimum of - (a) 6 metres and maximum of 8 metres for building wall; (b) 4 metres for balconies, eaves, awning or the like
Side Setbacks	(1) Minimum of - (a) 2 metres at ground level and when greater than 7.5 metres, 2 metres plus 0.5 metres for every 3 metres or part thereof by which the building exceeds 7.5 metres; (b) where incorporating open space in the side setback - (i) 4 metres for the extent of private open space areas; (ii) 5 metres for the extent of communal open space areas
Rear Setback	(1) Minimum of - (a) 4 metres at ground level; (b) 5 metres for the extent of communal open space, where incorporated in the rear setback
Setbacks in Centre Zones	As specified in relevant zone code

Table 2- Maximum Height to the Top of the Floor Level of Highest Habitable Room

Location		Maximum Height to the Top of the Floor Level of Highest Habitable Room
General		
Medium Density Residential Zone - other than sub-area MDR1 and a number of MDR3 sites		7 metres (3 storey)
Medium Density Residential Zone - sub-area MDR1 sites		
Capalaba - Refer to Map 1/5 of Medium Density Residential Zone Code		
1	Moreton Bay Road, Pittwin Road North	16 metres (6 storey)
2	Mount Cotton Road	13 metres (5 storey)
Cleveland - Refer to Map 2/5 of Medium Density Residential Zone Code		
3	Haggup Street, Queen Street, Waterloo Street	13 metres (5 storey)
4	Michelle Court	13 metres (5 storey)
5	Shore Street, Middle Street, Island Street	13 metres (5 storey)
6	Channel Street, Shore Street, Middle Street	16 metres (6 storey)
7	Passage Street	13 metres (5 storey)
8	Queen Street, Passage Street, Middle Street	7 metres (3 storey)
9	Middle Street, Shore Street, Wharf Street	13 metres (5 storey)
10	Wharf Street, Shore Street, Middle Street	13 metres (5 storey)
11	North Street, Shore Street East	7 metres (3 storey)
Redland Bay - Refer to Map 3/5 of Medium Density Residential Zone Code		
12	Boundary Street, Broadwater Terrace, Esplanade, Stradbroke Street	7 metres (3 storey)
13 A	Hamilton Street, Esplanade, Peel Street	13 metres (5 storey)
13 B	Hamilton Street, Esplanade, Peel Street	7 metres (3 storey)
14	Gladstone Street, Peel Street and Broadwater Terrace	7 metres (3 storey)
15	Weinam Street, Banana Street, Outridge Street, Hamilton Street, Meissner Street	7 metres (3 storey)
Coochiemudlo Island - Refer to Map 4/5 of Medium Density Residential Zone Code		
16	Victoria Parade	7 metres (3 storey)
Medium Density Residential Zone - sub-area MDR3 sites		
Redland Bay - Refer to Map 5/5 of Medium Density Residential Zone Code		
17	Salisbury Street	8 metres (3 storey)
18	Salisbury Street	7 metres (3 storey)
19	Salisbury Street	(2 storey)
20	Salisbury Street	(1-3 storey)
21	Salisbury Street	(1 storey)

Diagram 1 Design techniques to reduce overlooking

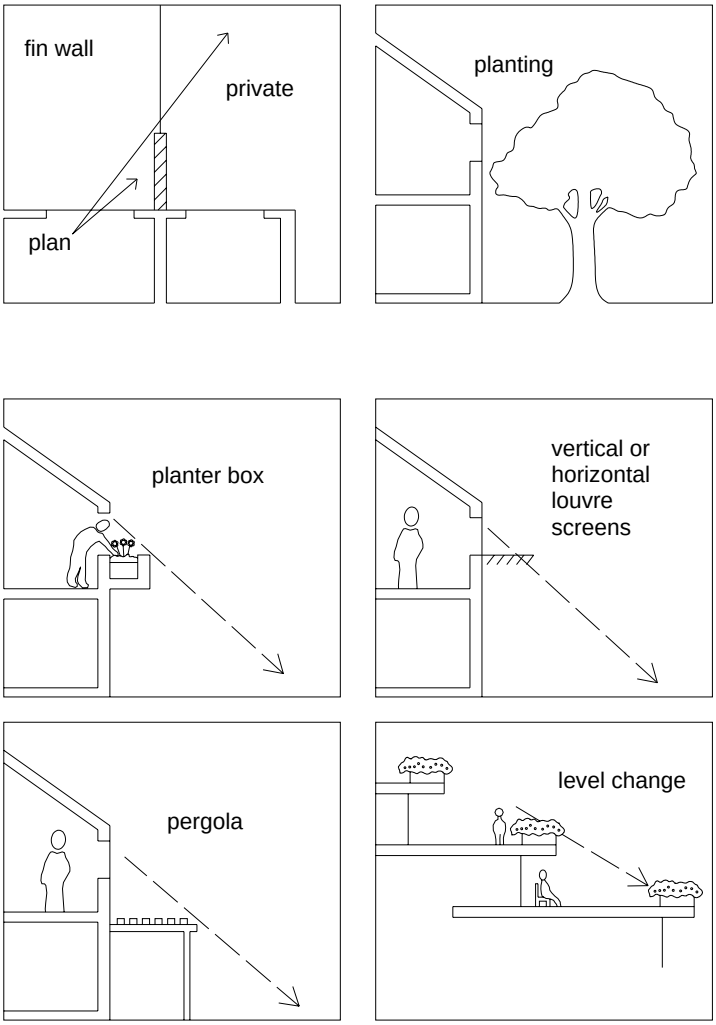

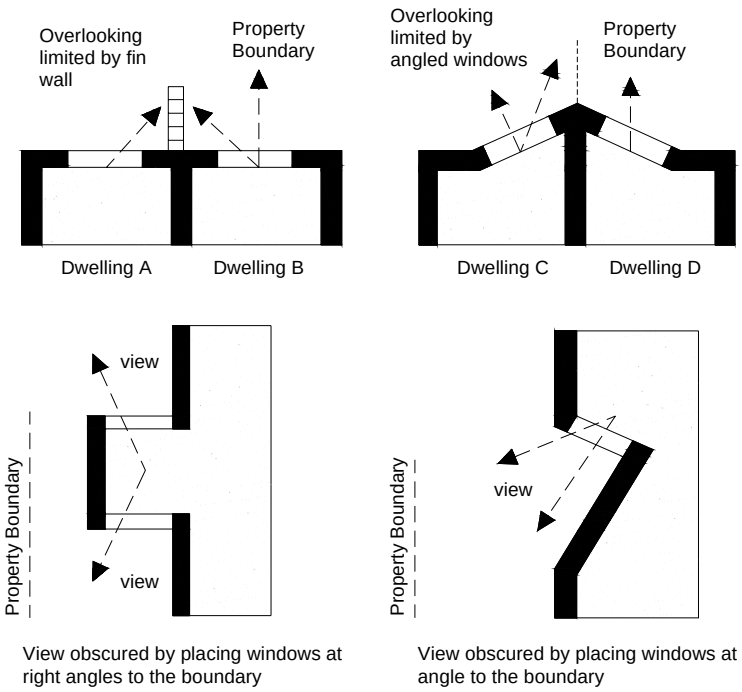

Diagram 2 - Front fencing design

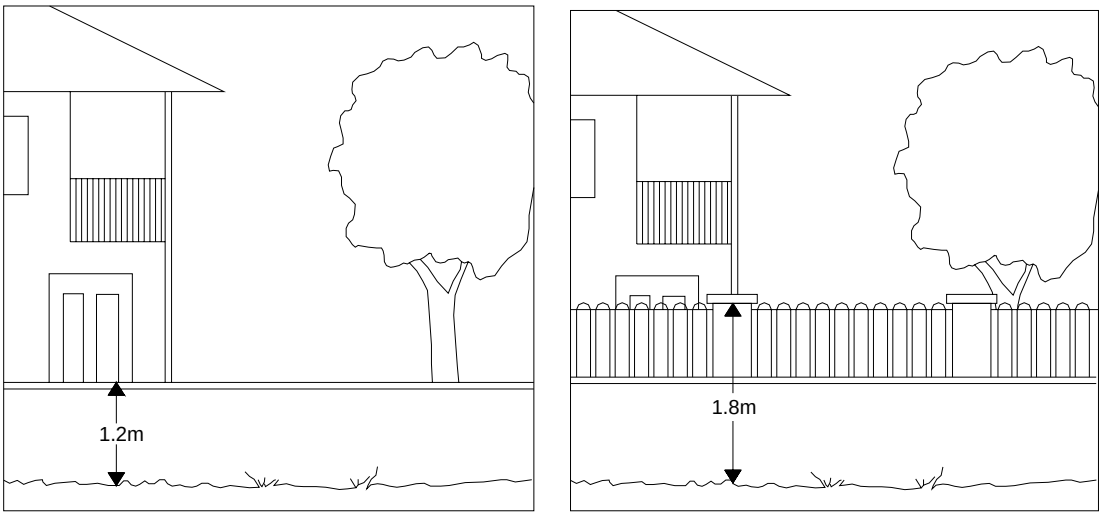

Division 5 - Bed and Breakfast

6.5.1 Introduction

(1) This division contains the provisions for the Bed and Breakfast Code, that incorporates -

(a) Compliance with the Bed and Breakfast Code (section 6.5.2);

(b) Overall Outcomes of the Bed and Breakfast Code (section 6.5.3);

(c) Acceptable Solutions applicable to Self-Assessable Development (section 6.5.4);

(d) Specific Outcomes and Probable Solutions applicable to Assessable Development (section 6.5.5)

6.5.2 Compliance with the Bed and Breakfast Code

(1) Development that is consistent with the following complies with the Bed and Breakfast Code -

(a) acceptable solutions in section 6.5.4 where self-assessable development; or

(b) specific outcomes in section 6.5.5 where assessable development.

6.5.3 Overall Outcomes of the Bed and Breakfast Code

(1) The overall outcomes are the purpose of the Bed and Breakfast Code.

(2) The overall outcome sought for the Bed and Breakfast Code is the following -

(a) to ensure the use -

(i) provides for low-key, short-term tourist accommodation;

(ii) maintains a high level of residential amenity for adjoining and nearby development;

(iii) maintains the character of the streetscape;

(iv) is located where it is readily accessible to tourists.

6.5.4 Acceptable Solutions applicable to Self-Assessable Development

Self-Assessable Development	
Acceptable Solutions	
A1.	(1) The use operates from a detached dwelling house; (2) The use is located on a lot with a minimum area of 800 square metres; (3) The maximum number of guests accommodated at any one time complies with Table 1 - Maximum Number of Guests and Bedrooms per Zone; (4) The maximum number of bedrooms available for the use complies with Table 1 - Maximum Number of Guests and Bedrooms per Zone; (5) Guest accommodation is reliant on the permanent facilities of the dwelling house including water, sewerage, waste disposal, electricity and cooking facilities; (6) Guests are excluded from at least one (1) bedroom within the dwelling house that is solely used by the residents; (7) Privacy between dwelling units on adjoining properties is achieved by - (a) where it is proposed that habitable room windows will be directly adjacent to habitable rooms of the neighbouring dwelling unit within a distance of 6 metres and within an angle of 45 degrees, privacy is protected by - (i) sill heights being a minimum of 1.5 metres above floor level; or (ii) providing fixed translucent, such as frosted or textured glazing, for any part of the window below 1.5 metres above floor level; or (iii) providing fixed external screens that are - a. solid translucent screens; or b. perforated panels or trellises that have a maximum of 25 percent openings, with a maximum opening dimension of 50mm and that are permanently fixed and durable; c. are offset a minimum of 300mm from the face of the building; (b) outlook from windows, balconies, stairs, landings, terraces and decks and other private areas, is obscured or screened where a direct view is available into the private open space of another dwelling unit by - (i) providing screening devices as detailed above; or (ii) providing existing or new planted landscaping that will achieve 2 metres or greater in height at maturity. **Note -** Where screening devices are used, they should be integrated with the building design and have minimal negative affect on the resident's or adjoining property amenity. (8) Car parking provision complies with Part 9 - Schedule 1 - Access and Parking - Table 1 - Minimum On-Site Vehicle Parking Requirements; (9) Vehicular access to and from the lot or premises is via the same access point as the dwelling house; (10) The use is designed in accordance with the provisions of *Australian Standard 1428:2001 - Design for Access and Mobility*; (11) Any advertising device is - (a) less than 0.25m^2 in size and displays only the name of the accommodation, host name, telephone number, website and email address; (b) a maximum height of 1.5 metres above ground level; (c) attached to the front fencing or building façade.

6.5.5 Specific Outcomes and Probable Solutions applicable to Assessable Development

Assessable Development			
Specific Outcomes		**Probable Solutions**	
S1.	(1) The use is located - (a) on recognised tourist routes; (b) in close proximity to recreation and tourist facilities.	**P1.**	(1) No probable solution identified. **Note -** Refer to the relevant zone code to establish if the use is consistent with that zone.
S2.1	(1) The appearance of the use is consistent with the existing scale and character of buildings in the surrounding locality; (2) The intensity of activity associated with the use is compatible with that expected in a residential environment.	**P2.1**	(1) The use - (a) operates from a detached dwelling house; (b) is located on a lot or premises with a minimum area of 800m^2; (2) The use - (a) has a maximum number of guests and bedrooms used for accommodation that complies with Table 1 - Maximum Number of Guests and Bedrooms per Zone; (b) ensures guest accommodation is reliant on the permanent facilities of the dwelling house including water, sewerage or on-site wastewater disposal, waste facilities, electricity and cooking facilities; (c) ensures guests are excluded from at least one (1) bedroom within the dwelling house that is solely used by the residents.
S2.2	The use does not compromise the principle operation of the dwelling house as a private residence.	**P2.2**	No probable solution identified.
S2.3	(1) Privacy between dwelling units on adjoining properties is achieved by effective design to minimise overlooking into habitable rooms or private open space areas.	**P2.3**	(1) Privacy between dwelling units on adjoining sites is achieved by - (a) where it is proposed that habitable room windows will be directly adjacent to habitable rooms of the adjoining dwelling unit within a distance of 6 metres and within an angle of 45 degrees, privacy is protected by - (i) sill heights being a minimum of 1.5 metres above floor level; or (ii) providing fixed translucent, such as frosted or textured glazing, for any part of the window below 1.5 metres above floor level; or (iii) providing fixed external screens, that are -

Assessable Development			
Specific Outcomes		**Probable Solutions**	
			a. solid translucent screens; or b. perforated panels or trellises that have a maximum of 25 percent openings, with a maximum opening dimension of 50mm and that are permanently fixed and durable; c. are offset a minimum of 300mm from the face of the building; (b) outlook from windows, balconies, stairs, landings, terraces and decks and other private areas, is obscured or screened where a direct view is available into the private open space of another dwelling unit by - (i) provide screening devices as detailed above; or (ii) incorporating existing or new planted landscape that will achieve 2 metres or greater in height at maturity. **Note -** Where screening devices are used, they should be integrated with the building design and have minimal negative affect on the resident's or adjoining property amenity.
S3.1	(1) On-site car parking - (a) caters for resident and guest vehicle parking; (b) mitigates visual impacts; (c) including car parking structures, is screened from the street by landscape planting; (d) is designed to ensure vehicular access to and from the use is via the same access driveway as for the dwelling house.	**P3.1**	(1) Car parking provision complies with Part 9 - Schedule 1 - Access and Parking - Table 1 - Minimum On-Site Vehicle Parking Requirements.
S3.2.	Design and layout addresses the mobility requirements of all people, particularly those requiring disabled access.	**P3.2**	The use is designed in accordance with the provisions of *Australian Standard 1428:2001 - Design for Access and Mobility*.

Assessable Development			
Specific Outcomes		**Probable Solutions**	
S4.	(1) Signage identifying the accommodation is located and of a size and design that is compatible with the nature of the use and the locality.	**P4.**	(1) The advertising device is - (a) less than 0.25 m² in size and displays only the name of the accommodation, host name, telephone number, website and email address; (b) a maximum of 1.5 metres in height above ground level; (c) attached to the front fencing or building façade. **Note -** To assist in achieving the specific outcome refer to Part 7 - Division 1 - Advertising Devices Code for additional requirements.

Table 1 - Maximum Number of Guests and Bedrooms by Zone

Zone	Maximum Number of Guests / Maximum Number of Bedrooms	
	Self-Assessable Development	**Assessable Development**
■ Urban Residential	N/A	4 / 2
■ Urban Residential - sub-area UR1, UR2 and UR3	N/A	6 / 3
■ Medium Density Residential - including all sub-areas	2 / 1	6 / 3
■ Low Density Residential ■ Park Residential	4 / 2	6 / 3
■ Point Lookout Residential ■ Point Lookout Tourist - including all sub-areas	N/A	4 / 2
■ SMBI Residential - including sub-area SR1	N/A	4 / 2
■ Conservation - excluding sub-areas CN1 and CN2 ■ Environmental Protection	N/A	6 / 3
■ Emerging Urban Community ■ Rural Non-Urban - excluding sub-area RN2 and RN3	6 / 3	12 / 6
■ Rural Non-Urban - sub-area RN3	N/A	12 / 6

this page purposely
left blank

Division 6 - Caretakers Dwelling

6.6.1 Introduction

(1) This division contains the provisions for the Caretakers Dwelling Code, that incorporates -

(a) Compliance with the Caretakers Dwelling Code (section 6.6.2);

(b) Overall Outcomes of the Caretakers Dwelling Code (section 6.6.3);

(c) Specific Outcomes and Probable Solutions applicable to Assessable Development (section 6.6.4).

6.6.2 Compliance with the Caretakers Dwelling Code

(1) Development that is consistent with the specific outcomes in section 6.6.4 complies with the Caretakers Dwelling Code.

6.6.3 Overall Outcomes of the Caretakers Dwelling Code

(1) The overall outcomes are the purpose of the Caretakers Dwelling Code.

(2) The overall outcome sought for the Caretakers Dwelling Code is the following -

(a) to ensure the use is -

(i) for property security, maintenance or management purposes;

(ii) located on a lot or premises that is associated with a non-residential use and is not used for residential purposes;

(iii) compatible with an acceptable level of residential amenity.

6.6.4 Specific Outcomes and Probable Solutions applicable to Assessable Development

Assessable Development			
Specific Outcomes		**Probable Solutions**	
S1.	Location - (1) The use is located on a lot or premises that - (a) is not intended or used for residential purposes; (b) has an approved or proposed non-residential use.	**P1.**	(1) The use is located on the same lot or premises as the approved non-residential use. **Note -** Refer to the relevant zone code to establish if the use is consistent with that zone.
S2.	Occupancy - The dwelling unit is occupied by a person or persons having responsibility for the security, maintenance or management of the non-residential use on the premises.	**P2.**	No probable solution identified.
S3.	Dwelling Unit Size - (1) The use is of a size that is - (a) consistent with locality; (b) is limited to that necessary to house the person or persons having responsibility for the matters outlined in S2.	**P3.**	(1) The use - (a) has a gross floor area less than $100m^2$; (b) is limited to one caretakers dwelling per premises, including any farm holding or other premises that may operate over a number of lots in the same locality. **Note -** The local government will only support a caretakers dwelling where related to an existing or lawful non-residential use and where the on-site accommodation is essential for the management of the premises.
S4.	Siting and Design - The siting and design of the use ensures occupants are not adversely affected by environmental emissions by the non-residential use on the lot or premises.	**P4.**	No probable solution identified.

Division 7 - Child Care Centre

6.7.1 Introduction

(1) This division contains the provisions for the Child Care Centre Code, that incorporates -

(a) Compliance with the Child Care Centre Code (section 6.7.2);

(b) Overall Outcomes of the Child Care Centre Code (section 6.7.3);

(c) Specific Outcomes and Probable Solutions applicable to Assessable Development (section 6.7.4).

6.7.2 Compliance with the Child Care Centre Code

(1) Development that is consistent with the specific outcomes in section 6.7.4 complies with the Child Care Centre Code.

Note -

Child care centres are subject to the provisions of the *Child Care Act 2002*, the *Child Care Regulation 2003* and the *Queensland Development Code - Part 22 - Child Care Centres.*

6.7.3 Overall Outcomes of the Child Care Centre Code

(1) The overall outcomes are the purpose of the Child Care Centre Code.

(2) The overall outcome sought for the Child Care Centre Code is the following -

(a) to ensure the use -

(i) is conveniently located in conjunction with other community facilities and to users served;

(ii) is compatible with the character of the locality and the physical characteristics of the site;

(iii) is designed for the specific needs of end users;

(iv) does not have an adverse impact on the amenity of the adjoining and nearby properties;

(v) provides for the safe movement for pedestrians and vehicles;

(vi) minimises impacts on surrounding traffic networks.

6.7.4 Specific Outcomes and Probable Solutions applicable to Assessable Development

Assessable Development			
Specific Outcomes		**Probable Solutions**	
	Location -		
S1.1	(1) The use is - (a) in a highly accessible location; (b) co-located with community focal points such as centres, community facilities, open space, education facilities or the like; (2) The location of the use does not - (a) adversely impact on external traffic movement; or (b) introduce non-local traffic into local residential streets.	**P1.1**	(1) No probable solution identified; (2) The use is located on either a collector, trunk collector or sub-arterial road. **Note -** Refer to Table 2 - Road Design in Part 9 - Schedule 6 - Movement Network and Road Design, for the local government's movement network road hierarchy.
S1.2	(1) The use is located on a site having a size and configuration that enables it to accommodate a well designed facility incorporating - (a) all required buildings and structures; (b) vehicle access, parking and manoeuvring areas; (c) adequate provision for both external play areas and internal activity areas, including sleep areas; (d) waste management and other service functions; (e) emergency vehicle access; (f) landscaping, planting and buffering.	**P1.2**	(1) The use is located on land having less than 10 percent slope (1 in 10) and a minimum area of - (a) 1500m² for up to 40 children; or (b) 2200m² for between 40 - 75 children; or (c) for more than 75 children, no probable solution identified. **Note -** A smaller site area may be considered where some or all of the parking is provided in reasonable proximity to the use rather than on the proposed site. An example being a child care centre located in a major shopping centre.
	Site Layout and Building Design -		
S2.	(1) Site layout and building design - (a) maintains and enhances the visual amenity of the locality; (b) reinforces or contributes to an attractive streetscape; (c) is compatible with the character of the locality; (d) actively enhance and promote children's physical health and safety. (2) The location and design of play areas minimise noise impacts to adjoining and nearby properties; (3) Waste storage and collection areas and service and delivery areas are screened from the streetscape and located to minimise adverse impacts on adjoining properties.	**P2.**	(1) No probable solution identified; (2) No probable solution identified; (3) No probable solution identified. **Note -** Site layout and building design is in accordance with the *Queensland Development Code - Part 22 - Child Care Centres*.

Assessable Development			
Specific Outcomes		**Probable Solutions**	
S3.	Landscaping and Open Space - (1) Planting is used to present an attractive appearance to the streetscape; (2) Outdoor open space and play areas are designed as an extension of the indoor learning areas and offer a functional and visually attractive environment for a wide range of activities; (3) Play areas are located and designed to - (a) allow maximum natural light; (b) avoid afternoon western sun; (c) maximise natural ventilation and access to cooling breezes in summer; (d) minimise exposure to cold winds in winter.	**P3.**	(1) Planting - (a) is provided in a 2 metre wide strip along the primary street frontage; (b) where adjacent to play areas, is located on the street side of fencing; (2) No probable solution identified; (3) No probable solution identified. **Note -** Indoor and outdoor play areas comply with the provisions of - ■ *Queensland Development Code - Part 22 - Child Care Centres;* ■ *Child Care Act 2002;* ■ *Child Care Regulation 2003.*
S4.	Access and Parking - (1) On-site car parking is sufficient to cater for employees and users; (2) Car parking areas maintain pedestrian safety; (3) Driveways promote ease of access and movement.	**P4.**	(1) Car parking complies with Part 9 - Schedule 1 - Access and Parking - Table 1 - Minimum On-Site Vehicle Parking Requirements; (2) Pedestrian paths are clearly identified and separated from car parking and manoeuvring areas; (3) Driveways are 6.5 metres or greater in width.
S5.	Safety and Security - (1) The use - (a) has a main entrance that is highly visible from the street frontage; (b) is designed to facilitate the casual surveillance of public spaces; (c) is designed to ensure the casual surveillance of high security risk areas such as building entries, car parking and play areas; (d) is not compromised by landscape planting and fencing.	**P5.**	(1) No probable solution identified. **Note -** To assist in achieving S5. refer to Planning Scheme Policy 16 - Safer By Design.

this page purposely
left blank

Division 8 - Display Dwelling

6.8.1 Introduction

(1) This division contains the provisions for the Display Dwelling Code, that incorporates -

(a) Compliance with the Display Dwelling Code (section 6.8.2);

(b) Overall Outcomes of the Display Dwelling Code (section 6.8.3);

(c) Acceptable Solutions applicable to Self-Assessable Development (section 6.8.4);

(d) Specific Outcomes and Probable Solutions applicable to Assessable Development (section 6.8.5).

6.8.2 Compliance with the Display Dwelling Code

(1) Development that is consistent with the following complies with the Display Dwelling Code -

(a) acceptable solutions in section 6.8.4 where self-assessable development; or

(b) specific outcomes in section 6.8.5 where assessable development.

6.8.3 Overall Outcomes of the Display Dwelling Code

(1) The overall outcomes are the purpose of the Display Dwelling Code.

(2) The overall outcome sought for the Display Dwelling Code is the following -

(a) to ensure the use -

(i) has a limited duration of operation;

(ii) maintains the character and amenity of the surrounding area.

6.8.4 Acceptable Solutions applicable to Self-Assessable Development

Self-Assessable Development	
Acceptable Solutions	
A1.	(1) The use - (a) is approved as a dwelling unit by the local government; (b) hours of operation do not commence before 8am or extend beyond 7pm; (c) is used as a dwelling unit within 2 years of being constructed; (d) if offered as a prize - its operation is limited to a maximum period of 6 months; (e) complies with the criteria detailed in Table 1 - Minimum On-site Vehicle Parking Requirements in Part 9 - Schedule 1 - Access and Parking; (2) Is located on a collector or higher order road; (3) Signage associated with the use is - (a) not greater than 1m²; (b) less than 2 metres in height above ground level; (c) not illuminated; (d) located on-site or on a fence facing a primary road frontage.

6.8.5 Specific Outcomes and Probable Solutions applicable to Assessable Development

Assessable Development			
Specific Outcomes		**Probable Solutions**	
S1.	(1) The use does not adversely impact on the character and amenity of the surrounding area; (2) The use operates for a limited duration to promote and sell dwelling units or offer a dwelling unit as a prize; (3) Signage for the use is minimal; (4) Adequate car parking is provided for single display dwellings and display villages.	**P1.**	(1) The use - (a) has been approved as a dwelling unit by the local government; (b) hours of operation do not commence before 8am or extend beyond 7pm; **Note -** Refer to the relevant zone code to establish if the use is consistent with that zone. (2) The use - (a) is used as a dwelling unit within two years of being constructed; or (b) if offered as a prize - operates for a maximum of 6 months; (3) Signage associated with the use is - (a) not greater than 1m²; (b) less than 2 metres in height above ground level; (c) not illuminated; (d) located on-site or on a fence facing a primary road frontage; **Note -** Refer to Part 7 - Division 1 - Advertising Devices Code for additional assessment criteria. (4) Car parking - (a) complies with Table 1 - Minimum On-site Vehicle Parking Requirements in Part 9 - Schedule 1 - Access and Parking; (b) where more than 3 display dwellings - directional signage is provided to a temporary off-street car parking area.

this page purposely left blank

Division 9 - Drive Through Restaurant

6.9.1 Introduction

(1) This division contains the provisions for the Drive Through Restaurant Code, that incorporates -

(a) Compliance with the Drive Through Restaurant Code (section 6.9.2);

(b) Overall Outcomes of the Drive Through Restaurant Code (section 6.9.3);

(c) Specific Outcomes and Probable Solutions applicable to Assessable Development (section 6.9.4).

6.9.2 Compliance with the Drive Through Restaurant Code

(1) Development that is consistent with the specific outcomes in section 6.9.4 complies with the Drive Through Restaurant Code.

Note -

Planning Scheme Policy 5 - Environmental Emissions will assist in achieving specific outcomes within the Drive Through Restaurant Code.

6.9.3 Overall Outcomes of the Drive Through Restaurant Code

(1) The overall outcomes are the purpose of the Drive Through Restaurant Code.

(2) The overall outcome sought for the Drive Through Restaurant Code is the following -

(a) to ensure the use -

(i) is located to complement centre activities;

(ii) is compatible with the character of the locality and the physical characteristics of the site on which it is located;

(iii) incorporates a high standard of landscape and open space design;

(iv) provides for adequate service facilities that minimise adverse impacts on adjoining and nearby uses;

(v) provides a high standard of pedestrian and vehicular accessibility;

(vi) minimises impacts on surrounding traffic networks.

6.9.4 Specific Outcomes and Probable Solutions applicable to Assessable Development

Assessable Development			
Specific Outcomes		**Probable Solutions**	
	Location -		
S1.	(1) The use is located - (a) within established centres; (b) in areas away from sensitive receiving environments.	**P1.**	(1) No probable solution identified. **Note -** Refer to the relevant zone code to establish if the use is consistent with that zone.
	Site Layout and Building Design -		
S2.1	(1) Buildings and structures are compatible with the scale and character of adjoining and nearby uses.	**P2.1**	(1) Buildings - (a) address the street, with parking located to the side and rear; (b) have textured façades; (c) are orientated so that drive through windows avoid conflict with traffic as a result of headlight nuisance; (d) are articulated to incorporate the following design elements, particularly along the street frontage - (i) verandahs; (ii) awnings; (iii) eaves; (iv) windows; (v) recesses. **Note -** Refer to Diagram 1 - Conceptual site layout for drive through restaurants.
S2.2	(1) On-site play areas are sited and designed to - (a) allow for ease of supervision; (b) ensure the safety of children.	**P2.2**	(1) No probable solution identified.
S2.3	Signage location and design is integrated into the site layout and landscaped areas.	**P2.3**	No probable solution identified. **Note -** Refer to Part 7 - Division 1 - Advertising Devices Code for additional requirements.
	Landscape and Open Space Design -		
S3.	(1) The use is landscaped to - (a) provide visual relief from buildings and structures; (b) achieve a high quality streetscape; (c) reduce the visual impact of vehicle parking and drive	**P3.**	(1) No probable solution identified; (2) Landscaping incorporates - (a) a minimum 2 metre wide planted landscaped area along all property boundaries, excluding entrance and exit access points of the site;

Assessable Development			
Specific Outcomes		**Probable Solutions**	
	through areas; (d) allow adequate visibility for the casual surveillance of public spaces, including entrances and exits; (e) contribute to safe and attractive play areas; (2) Landscaping is used to minimise visual and noise impacts on adjoining and nearby properties.		(b) where having a common boundary with a sensitive receiving environment, a densely planted 3 metre wide landscape buffer, in combination with a 2 metre high solid fence. **Note -** ■ Refer to Diagram 1 - Conceptual site layout for drive through restaurants; ■ Refer to Part 8 - Division 8 - Landscape Code for additional requirements.
	Environmental Impacts -		
S4.1	(1) Noise and air emissions generated by exhaust systems, air conditioning, refrigeration and the like are mitigated by - (a) providing measures to minimise air and odour emissions; (b) providing noise attenuation measures that are designed and located to minimise adverse impacts on sensitive receiving environments.	**P4.1**	(1) The use - (a) no probable solution identified; (b) reduces noise impacts by - (i) enclosing or otherwise attenuating plant and machinery; (ii) not generating noise, measured as the $L_{Amax,adj,T}$ parameter, at the boundary of the lot or premises, that exceeds - a. 5 dB(A) above the ambient background noise level between 7am to 10pm; or b. 3 dB(A) above the ambient background noise level between 10pm to 7am; or (iii) complying with the requirements of any development approval for an environmentally relevant activity, issued under the *Environmental Protection Act 1994*. **Note -** The $L_{Amax,adj,T}$ parameter is defined in the *Noise Measurement Manual* (Environmental Protection Agency, 2000).
S4.2	(1) Lighting is located and designed to prevent adverse impacts on adjoining and nearby sensitive receiving environments.	**P4.2**	(1) All lighting is shielded in accordance with - (a) *Australian Standard 4282.3:1997 - Control of the Obtrusive Effects of Outdoor Lighting - Design, Installation, Operation and Maintenance;*

Assessable Development			
Specific Outcomes		**Probable Solutions**	
			(b) *Australian Standard 4282 Appendix A:1997 - Control of the Obtrusive Effects of Outdoor Lighting - General Principles for Control of the Obtrusive Effects of Outdoor Lighting.*
S4.3	(1) Delivery and service areas and waste storage and collection areas are - (a) located to minimise adverse impacts on sensitive receiving environments; (b) provided with adequate visual screening from public places and the street. (c) are designed to incorporate adequate waste collection manoeuvring and service areas.	**P4.3**	(1) An on-site waste collection system has - (a) sufficient waste collection vehicle manoeuvring area to enter and exit the site in a forward gear; (b) centralised bulk bin container storage area. **Note -** Refer to Part 11 – Planning Scheme Policy 9 – Infrastructure Works – Chapter 16 – Waste Management for further information on waste and recycling container volume, storage, servicing, screening and cleansing.
S4.4	On-site drainage is designed and maintained to enhance stormwater quality and prevent pollution of ground or surface waters.	**P4.4**	No probable solution identified. **Note -** For further information refer to - ■ Part 11 - Planning Scheme Policy 5 - Environmental Emissions; ■ Part 8 - Division 9 - Stormwater Management Code.

Diagram 1 - Conceptual Site Layout for Drive Through Restaurants

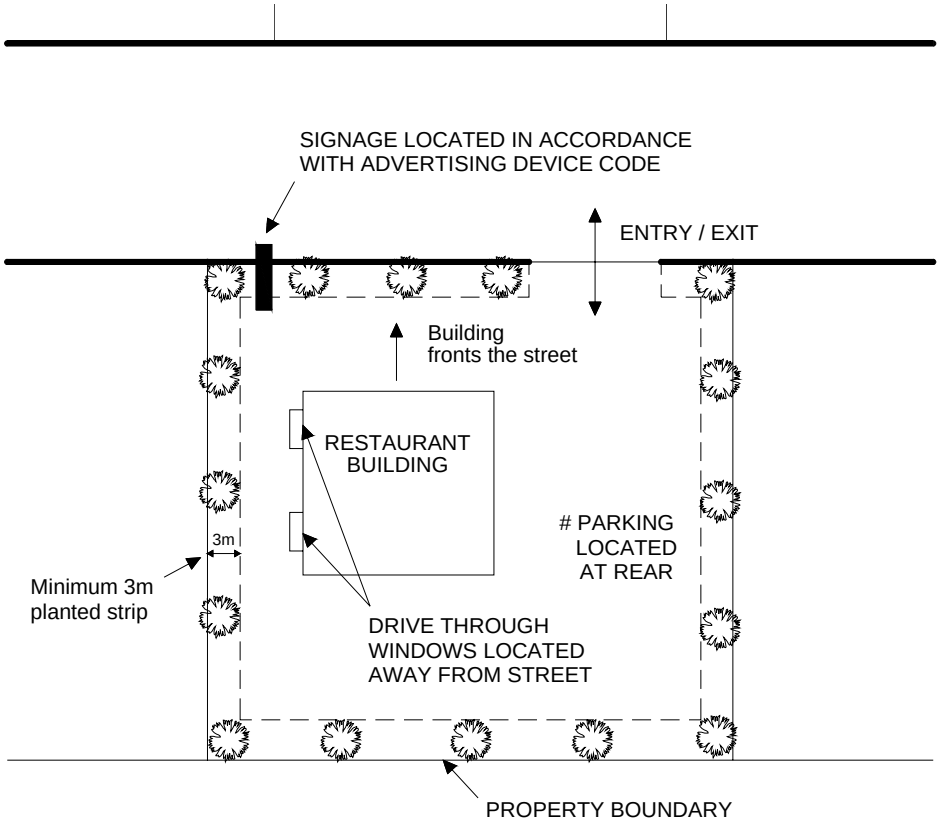

this page purposely
left blank

Division 10 - Dual Occupancy

6.10.1 Introduction

(1) This division contains the provisions for the Dual Occupancy Code, that incorporates -

(a) Compliance with the Dual Occupancy Code (section 6.10.2);

(b) Overall Outcomes of the Dual Occupancy Code (section 6.10.3);

(c) Specific Outcomes and Probable Solutions applicable to Assessable Development (section 6.10.4).

6.10.2 Compliance with the Dual Occupancy Code

(1) Development that is consistent with the specific outcomes of section 6.10.4 complies with the Dual Occupancy Code.

Note -

Planning Scheme Policy 8 - Housing will assist in achieving the specific outcomes within the Dual Occupancy Code.

6.10.3 Overall Outcomes of the Dual Occupancy Code

(1) The overall outcomes are the purpose of the Dual Occupancy Code.

(2) The overall outcome sought for the Dual Occupancy Code is the following -

(a) to ensure the use -

(i) provides a greater range of housing types to the community;

(ii) is designed and sited to provide for a high quality living environment;

(iii) maintains a high standard of residential amenity;

(iv) complements the character of the surrounding area.

6.10.4 Specific Outcomes and Probable Solutions applicable to Assessable Development

Assessable Development			
Specific Outcomes		**Probable Solutions**	
S1.	Location - (1) The use is located - (a) in an area with convenient access to a centre, community services and facilities; (b) within close proximity to public transport.	**P1.**	(1) No probable solution identified. **Note -** Refer to the relevant zone code to establish if the use is consistent with that zone.
S2.	Site Size and Density - (1) The use is on a lot that is consistent with the amenity of the locality and is sufficient in size to provide for the needs of the housing type proposed.	**P2.**	(1) The use complies with - (a) the lot size and frontage criteria for the use as detailed in Part 9 - Schedule 5 - Lot Sizes, Table 1 - Use Lot Size; (b) the density as detailed in the relevant zone code.
S3.	Site Layout and Building Design - (1) Layout and design enhances built form of the surrounding streetscape by - (a) contributing to the establishment of an attractive streetscape in new areas; (b) ensuring the use addresses the street frontage; (c) reducing building bulk by a combination of verandahs, recesses and variations in building form and materials; (d) ensuring building height and site coverage is consistent with the predominant height and scale of surrounding properties; (e) ensuring setbacks complement the existing streetscape and maximise private open space areas, solar access and provide for service areas.	**P3.**	(1) The use complies with the following requirements - (a) complies with the building height, site coverage and setbacks - detailed in Table 1 - Building Siting and Design Requirements; (b) addresses the street by presenting the front door and/or habitable room windows to the street; (c) for corner lot dual occupancies - each have a different street frontage; (d) for detached dual occupancy where there is an existing dwelling unit or for a new detached dual occupancy - (i) the dwelling units are positioned so that an entry statement is viewed from the street; (ii) the dwelling units have consistent building materials; (iii) the minimum separation distance between dwelling units is 5 metres; **Note -** The separation distance between the detached dwelling units does not contain garages, carports sheds or similar structures.

Assessable Development			
Specific Outcomes		**Probable Solutions**	
			(e) for dual occupancy attached to an existing dwelling unit - (i) the design maintains the appearance of a single dwelling house to the street; (ii) a communal driveway is provided; (iii) additional enclosed car accommodation is setback from the front building façade; (f) for new attached dual occupancy - (i) the use does not incorporate a mirror image design; (ii) the design maintains the appearance of a single dwelling house to the streetscape. (g) solar access to habitable rooms and private open space of adjoining dwelling units - (i) is not reduced to less than 3 hours between 9am and 3pm on June 21; or (ii) where existing overshadowing by building and fences is greater than this, sunlight is not further reduced by 20 percent. **Note -** For the purposes of this code, the term 'attached' does not mean by a covered breezeway or like structure. To assist in achieving the specific outcome, refer to Planning Scheme Policy 8 - Housing, specifically the section dealing with Site Development Plan, Site Analysis Plan and Streetscape Analysis.
S4.	Visual Privacy - (1) Privacy between dwelling units on the site and adjoining sites is achieved by effective building design and the location of windows and outdoor open space areas to prevent overlooking into habitable rooms or private open space areas. **Note -** The effective location of windows and balconies to avoid overlooking is	**P4.**	(1) The use complies with the following - (a) where habitable room windows are directly adjacent to habitable rooms of the neighbouring dwelling unit and are within a distance of 6 metres and within an angle of 45 degrees, privacy is protected by - (i) sill heights being a minimum of 1.5 metres above floor level; or

Assessable Development			
Specific Outcomes		**Probable Solutions**	
	preferred to the use of screening devices. Where these are used, they should be integrated with the building design and have minimal negative affect on the resident's or adjoining neighbour's amenity - refer to Diagram 1 and 2.		(ii) providing fixed translucent, such as frosted or textured glazing, for any part of the window below 1.5 metres above floor level; or (iii) providing fixed external screens; (b) where incorporating screening devices, they are - (i) solid translucent screens; or (ii) perforated panels or trellises that have a maximum of 25 percent openings, with a maximum opening dimension of 50mm and that are permanently fixed and durable; (iii) offset a minimum of 300mm from the face of the building; (c) outlook from windows, balconies, stairs, landings, terraces and decks and other private areas, is obscured or screened where a direct view is available into the private open space of another dwelling unit by - (i) providing screening devices as detailed above in P4.(1)(a) and (b); or (ii) existing or new planted landscaping that will achieve a minimum of 2 metres or greater in height at maturity.
S5.	Acoustic Amenity - Siting and design achieves a high level of amenity for occupants by minimising impacts from noise generating areas, such as streets, driveways, car parking areas and private open space areas.	**P5.**	No probable solution identified. **Note -** Shared walls between dwelling units are constructed in accordance with the noise transmission and insulation requirements of the *Building Code of Australia (1996)*.
S6.	Landscaping - (1) Landscape design contribute to a pleasant, safe and attractive living environment by - (a) retaining existing mature trees; (b) using species that are native to the area;	**P6.**	(1) The use incorporates the following landscaping - (a) 2 metre planted area along the length of any public road frontage; (b) 15 percent of the site is planted/grassed landscaping,

Assessable Development			
Specific Outcomes		**Probable Solutions**	
	(c) ensuring privacy, surveillance and amenity; (d) enhancing to climatic conditions; (e) not blocking or interrupting overland flowpaths.		rather than hardstand, in addition to the open space area; (c) fences forward of the building frontage are not more than - (i) 1.2 metres in height above ground level where of solid construction; or (ii) 1.8 metres in height above ground level where the fence is at least 30 percent transparent - refer to Diagram 3; (d) front fences that exceed 10 metres in length are articulated or detailed to provide visual interest; (e) where the side or rear boundaries adjoin open space / parkland, fences are a maximum of 1.2 metres in height; (f) where the front fence is lower than the side boundary fence, it is tapered to the maximum height of the side boundary fence at or behind the front building line; (g) internal fences do not exceed 1.2 metres in height.
S7.	Open Space Design - (1) Open space - (a) includes a clearly designated private open space area that provides privacy for residents; (b) is a useable size and dimension; (c) is a suitable slope; (d) is directly accessible from the main living area; (e) is capable of receiving sufficient sunlight; (f) is located behind the building frontage, and where above ground protect the privacy of adjoining and nearby properties - refer to Diagram 4.	**P7.**	(1) Open space consists of - (a) 20 percent of the site at ground level; **Note -** This area may contain private open space areas that are at ground level. (b) each dwelling unit is provided with a designated private open space area that - (i) at ground level - is a minimum of 25m^2 with a minimum dimension of 4 metres; (ii) where additional private open space is provided above ground, it is a minimum of 10m^2 with a minimum dimension of 2.5 metres; (iii) is directly accessible from the main living area; (iv) receives at least 3 hours of sunlight between 9am and 3pm on June 21 over 100

Assessable Development			
Specific Outcomes		**Probable Solutions**	
			percent of the area; (v) is orientated within 20 degrees of north; (vi) the finished level of the private open space area is not steeper than 1 in 14. **Note -** In circumstances where the land gradient is unsuitable to provide the required private open space at ground level, above ground level decks and balconies may constitute a higher proportion of the total required private open space area.
S8.	Access and Parking - (1) Vehicle parking and access - (a) is safe and convenient for residents and visitors; (b) has an appropriate number of car parking spaces to cater for residents and visitors; (c) does not dominate the streetscape or building form when viewed from the street; (d) is compatible with the overall building design in terms of height, roof form, detail, materials and colour; (e) incorporates landscaping to minimise the expanse of hard surfaces; (f) are clearly distinguished from pedestrian entries and paths through design, finish or location; (g) are surfaced with materials that provide stormwater infiltration or designed to drain to adjacent landscaped areas, other than turning areas; (h) have clearly defined manoeuvring areas.	**P8.**	(1) The use complies with - (a) the car parking space criteria detailed in Part 9 - Schedule 1 - Access and Parking - Table 1 - Minimum On-Site Vehicle Parking Requirements; (b) garages are located behind the front building façade; (c) in the case of a two storey building, the garage is recessed beneath the upper storey by at least 1.2 metres; (d) the garage opening does not exceed 6 metres in width or 50 percent of the frontage width, whichever is less; (e) the maximum straight alignment of a driveway is 12 metres; (f) driveway materials are non-slip and include brick, clay or concrete pavers, exposed aggregate, stamped pigmented concrete, bitumen or permeable materials; (g) the maximum slope of a driveway does not exceed 1 in 6; (h) the building setback accommodates a tandem car park space per dwelling unit on the driveway within the property boundary.
S9.	Safety and Security - (1) Site layout, building design and lighting - (a) maximises safety and security of residents; (b) provides for casual	**P9.**	(1) Maximise safety and security by - (a) including lighting to dwelling unit entries, car parking areas and pedestrian accessways that complies with the

Assessable Development			
Specific Outcomes		**Probable Solutions**	
	surveillance of the street.		provisions of *Australian Standard 4282: 1997 - Control of the obtrusive effects of outdoor lighting*; (b) allowing visitors who approach the front door to be seen without the need to open the door. **Note -** To assist in achieving S9. refer to Planning Scheme Policy 16 - Safer By Design.
S10.	Service Facilities - (1) Service facilities are provided to meet the needs of residents and are sited and designed in an unobtrusive and convenient manner. (2) Waste storage - (a) incorporates two wheelie bins per unit stored external to the garage in the curtilage of each unit and screened from view; (b) ensures wheelie bins are able to be wheeled to kerbside for collection without passing over steps, through dwelling areas, including garage.	**P10.**	(1) Service facilities and structures - (a) include open air clothes drying facilities with a minimum of $10m^2$ provided in a sunny, ventilated and convenient location that are screened from view from the street, and internal driveways; (b) locate air conditioning equipment behind the front building line; (c) provide waste and recycling bin storage areas capable of accommodating two bins per dwelling unit and sited more than 6 metres from the primary road frontage; (d) provide storage space to achieves the following minimum requirements - (i) lockable external accessible area of $3m^2$; (ii) height of 2.1 metres; (iii) screened from public view. **Note -** ■ This space may form part of a garage. ■ Storage areas are exclusive of private open space areas. (2) No probable solution identified.

Table 1 - Building Siting and Design Requirements

Standard	Requirement
Building Height	(1) A maximum of - (a) 8.5 metres above ground level; or (b) as specified in the applicable zone code; (c) floor levels above ground level are determined according to slope - (i) land with a gradient of 5 percent or less, does not exceed a maximum height of 3.5 metres when measured from ground level to the floor of the highest habitable room; (ii) land with a gradient greater than 5 percent, does not exceed a maximum height of - a. 5.1 metres when measured from ground level to the floor of the highest habitable room; b. 3 metres when measured from ground level to the floor of the lowest habitable room
Site Coverage	(1) A maximum of - (a) 50 percent; or (b) as specified in the relevant zone code
Front Setback	(1) Is a minimum of 6 metres, except for a corner lot where - (a) on the primary street frontage - 6 metres; (b) on the secondary frontage - 3 metres; or (2) In areas where a front setback is established the use is located between the setbacks of other dwelling units in the street
Side Setback	(1) Where the building is - (a) less than 4.5 metres in height - 1.5 metres; or (b) between 4.5 metres and 7.5 metres in height - 2 metres; or (c) greater than 7.5 metres in height - 2 metres plus 0.5 metres for ever 3 metres or part thereof by which the building exceeds 7.5 metres; (2) Where open space is located in the side setback - a minimum of 4 metres for the extent of private open space
Rear Setback	(1) A minimum of 2 metres; or (2) Where open space is located in the rear setback - a minimum of 4 metres for the extent of the open space
Built to Boundary	(1) Walls are located on the southern side of the lot to improve solar access with the northern setback increased to a minimum of 2 metres, or as required by the front setback; (2) The built to boundary wall - (a) is a maximum of 15 metres in total length with a maximum length of 9 metres without articulation; (b) articulation is consistent with the side and rear setback criteria above; (c) has no windows or openings to the boundary; (d) is an average height of 3 metres; (e) is a maximum height of 3.5 metres

Diagram 1 - Design techniques to avoid overlooking

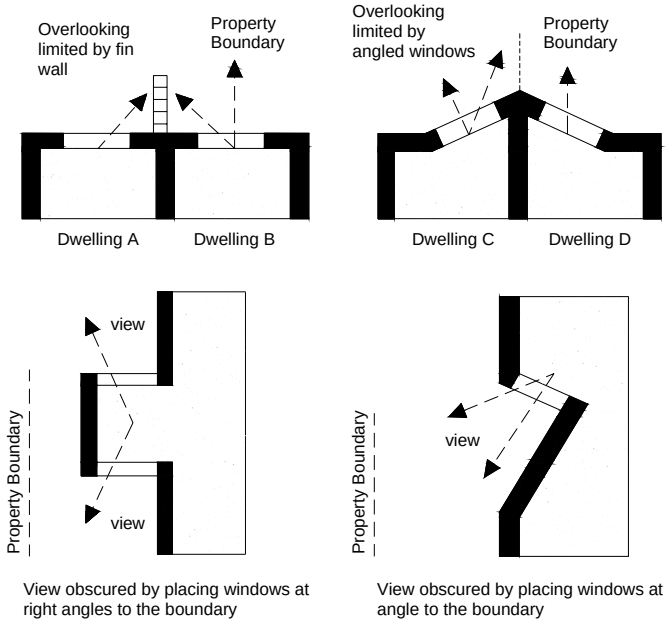

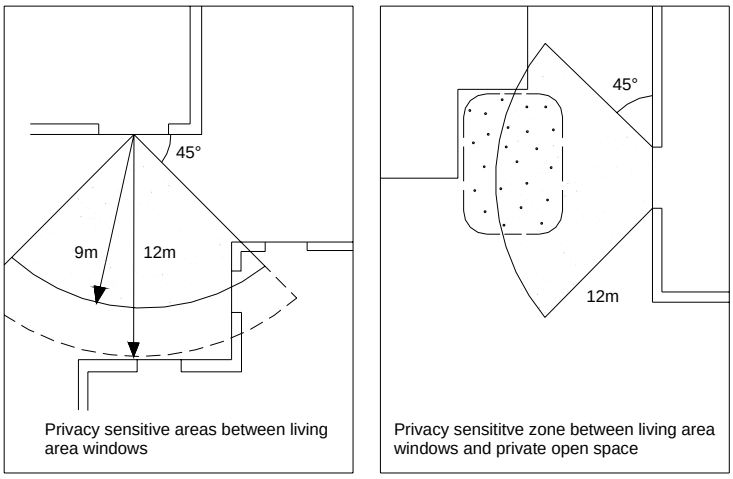

Diagram 2 - Situations where screening is required

Diagram 3 - Front fencing design

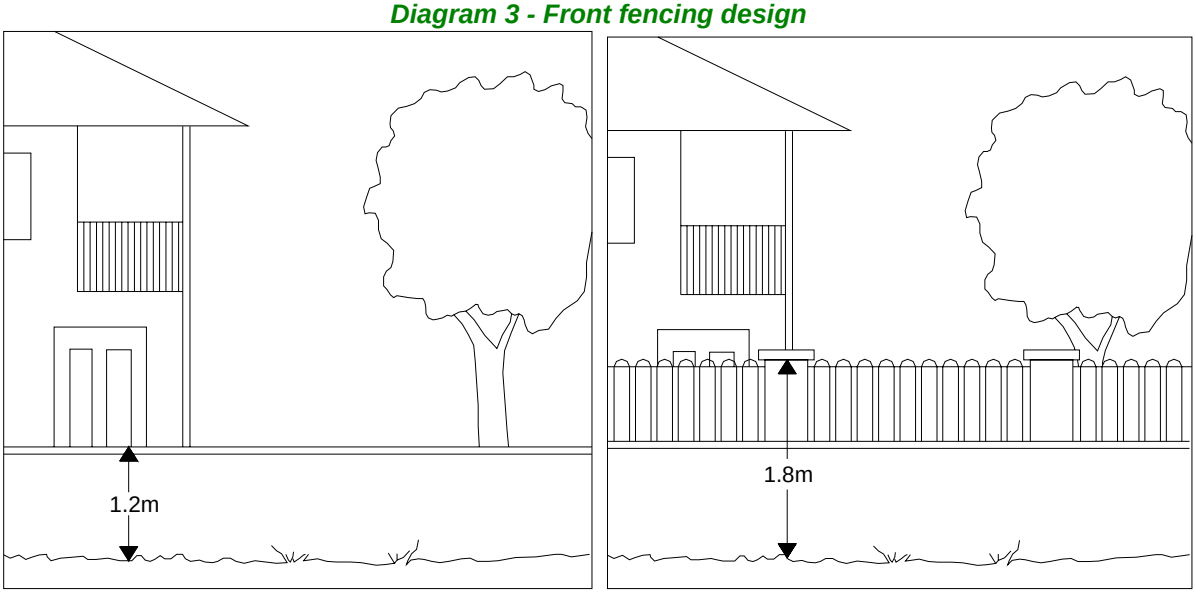

Dual Occupancy

Diagram 4 - Design for private open space

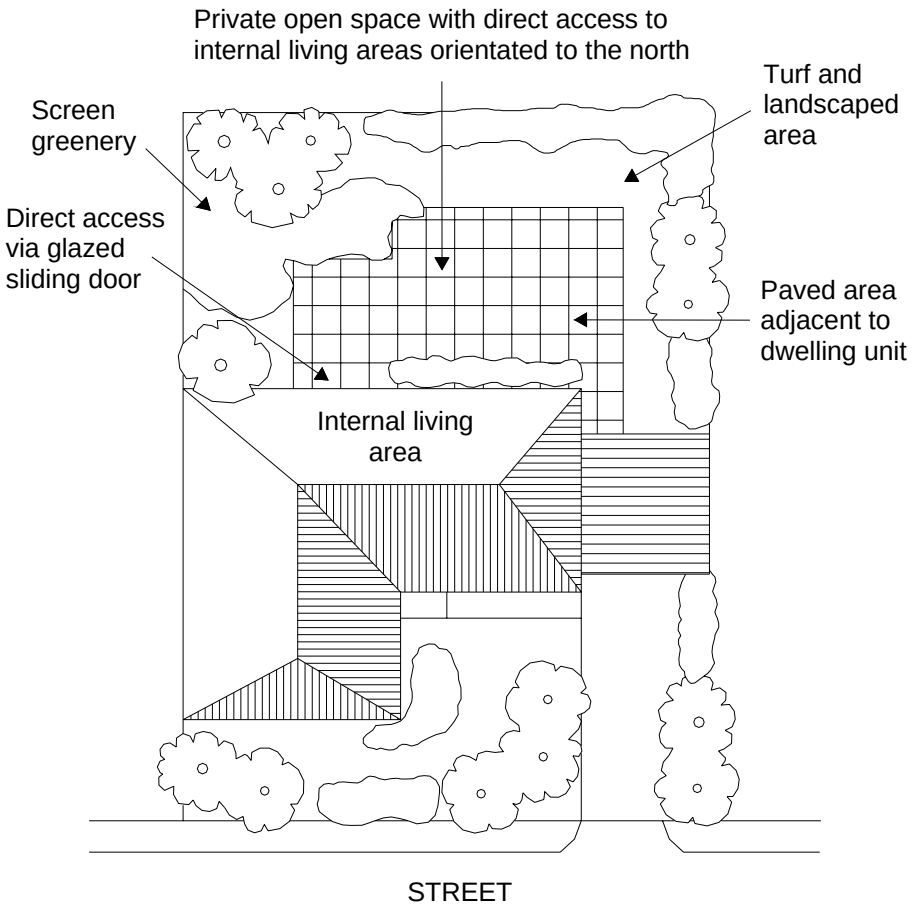

Division 11 - Dwelling House

6.11.1 Dwelling House Code

(1) This division contains the provisions for the Dwelling House Code, that incorporates -

(a) Building Act, 1975 (as amended) Alternative Provisions to Queensland Development Code MP1.2 (section 6.11.2)

(b) Compliance with the Dwelling House Code (section 6.11.3);

(c) Overall Outcomes of the Dwelling House Code (section 6.11.4);

(d) Acceptable Solutions applicable to Self-Assessable Development (section 6.11.5);

(e) Specific Outcomes and Probable Solutions applicable to Assessable Development (section 6.11.6).

6.11.2 Building Act, 1975 (as amended) Alternative Provisions to Queensland Development Code MP1.2

(1) The provisions of the *Queensland Development Code* (QDC) MP1.2 apply to the development. To the extent that the Dwelling House Code conflicts with a provision in QDC MP1.2, the Dwelling House Code prevails. The Dwelling House Code also contains specific outcomes and probable solutions that are nominated as –

(a) *Building Act, 1975* (as amended) "Alternative Provisions" to QDC MP1.2;
(b) Building Assessment Provisions for the purpose of section 10 of the *Building Regulation, 2006.*

Note -

This code nominates some alternative planning scheme provisions to the QDC in respect of setbacks, site cover and built to boundary walls. The access and parking and the visual privacy provisions have been nominated as Building Assessment Provisions for the purpose of Section 10 of the *Building Regulation 2006.*

Non compliance with <u>only</u> the acceptable solutions for self assessable development in relation to setbacks, site cover, built to boundary walls, access and parking and visual privacy will not elevate the level of assessment of a proposal from the self assessable development to assessable development under the Redlands Planning Scheme. In these instances, the local government will undertake the functions of a referral agency with Concurrence Agency jurisdiction under IPA to assess and determine these matters.

For example, if the proposal complies with the acceptable solutions for self assessable development in every respect <u>except</u> for a side boundary setback only, the matter of non compliance would be referred to Council for a referral agency consideration and response and will not require a development application.

(2) The following provisions are *Building Act, 1975* alternative provisions –

(a) S1(1) and P1(1) and (2);
(b) S2(1) and P2(1);
(c) S3(1) and P3(1);

(3) The following provisions are Building Assessment Provisions for the purpose of section 10 of the *Building Regulation, 2006* –

(a) S6(1) and P6(1);
(b) S7(1) and P7(1);

6.11.3 Compliance with the Dwelling House Code

(1) Development that is consistent with the following complies with the Dwelling House Code -

(a) acceptable solutions in section 6.11.5 where self-assessable development; or

(b) specific outcomes in section 6.11.6 where assessable development.

Note -

Planning Scheme Policy 8 - Housing will assist in achieving specific outcomes within the Dwelling House Code.

6.11.4 Overall Outcomes of the Dwelling House Code

(1) The overall outcomes are the purpose of the Dwelling House Code.

(2) The overall outcome sought for the Dwelling House Code is the following -

(a) to ensure the use -

(i) is designed and sited to provide for a high quality living environment;

(ii) maintains a high standard of residential amenity;

(iii) complements the character of the surrounding area.

6.11.5 Acceptable Solutions applicable to Self-Assessable Development

Self-Assessable Development	
Acceptable Solutions	
A1.	(1) Setbacks from the front, side and rear boundaries complies with Table 1 – Building Siting and Design Requirements; (2) Site Cover complies with Table 1 - Building Siting and Design Requirements; (3) Built to boundary walls comply with QDC MP1.2; **Note -** Built to boundary walls are intended for non-habitable rooms as detailed in the QDC MP1.2. (4) The use does not exceed - (a) a maximum building height of 8.5 metres above ground level; (b) 2 storey; (5) The use complies with the lot size and frontage criteria as detailed in Part 9 - Schedule 5 - Lot Sizes, Table 1- Use Lot Size; **Note -** Where a dwelling house is located on a lot with an area less than 500m^2, it is defined as a Small Lot House. (6) The use has - (a) a minimum of two car parking spaces on the premises, one of which is covered; (b) parking space dimensions comply with Table 2 – Minimum Parking Space

Self-Assessable Development

Acceptable Solutions

Dimensions;

Note -

Table 2 – Minimum Parking Space Dimensions reflects QDC MP1.2 A8.

(7) Where it is proposed that windows or balconies are less than 1.5 metres to the side or rear boundary, privacy between dwelling units is protected by providing screens, sill heights or obscure glazing in accordance with QDC MP1.2 A5;

Note -

The effective location of windows and balconies to avoid overlooking is preferred to the use of screening devices.

Probable Solution P7 reflects QDC MP1.2 A5

(8) The use is sited wholly in a development envelope area approved by the local government where applicable;

(9) In sub-area UR 2 -
- (a) external masonry building walls do not extend more than 4.5 metres above ground level;
- (b) includes the use of sheet materials, such as timber, metal or fibre cement for external cladding;
- (c) roofing material is sheet metal, such as corrugated iron;

(10) The maximum slope of a driveway does not exceed 1 in 4;

Note -

A maximum slope for a driveway of 1 in 6 is the local government's desired standard.

(11) In the Urban Residential Zone and Medium Density Residential Zone, where a dwelling house incorporates a garage that is classified as part of the class 1a building and faces the street, the garage opening does not exceed 6 metres.

Note -

During construction, allowing sediment to access a waterway or stormwater system, or placing sediment in a place where it may access a waterway or stormwater system is a breach of the *Environmental Protection (Water) Policy 1997*.

6.11.6 Specific Outcomes and Probable Solutions applicable to Assessable Developm ent

Assessable Development			
Specific Outcomes		**Probable Solutions**	
S1.	Boundary Setbacks - (1) Design and layout of the use enhances built form of the surrounding streetscape by - (a) contributing to the establishment of an attractive streetscape in new areas; (b) ensuring the use is compatible with surrounding development; (c) ensuring the building size and bulk of the use does not create overbearing development for neighbouring dwellings and their open space; (d) ensuring the use addresses the street frontage; (e) reducing building bulk through a combination of verandahs, recesses and variations in building form and materials; (f) ensuring the use is sited to prevent nuisance or threat to public safety. ***(Building Act, 1975 Alternative Provision to QDC MP1.2, P1 and P2)***	**P1.**	(1) The use complies with the following requirements - (a) boundary setbacks are in accordance with Table 1 – Building Siting and Design Requirements. ***(Building Act, 1975 Alternative Provision to QDC MP1.2, A1 and A2)***
S2.	Site Cover – (1) Design and layout of the use ensures adequate open space is provided for recreation, services facilities and landscaping. ***(Building Act, 1975 Alternative Provision to QDC MP1.2, P3)***	**P2.**	(1) The use complies with the following requirements - (a) Site cover is in accordance with Table 1 – Building Siting and Design Requirements. ***(Building Act, 1975 Alternative Provision to QDC MP1.2, P3)***
S3.	Built to Boundary Wall - (1) Built to boundary walls are designed to minimise impact on the amenity and privacy of residents of adjoining dwellings. ***(Building Act, 1975 Alternative Provision to QDC MP1.2, P2)***	**P3.**	(1) Built to boundary walls for Urban Residential (including sub-area UR2) and Medium Density Residential areas - (a) is a maximum of 15 metres in total length with a maximum length of 9 metres without articulation; (b) has no windows or doors to the boundary; (c) is an average height of 3.5 metres; (d) is a maximum height of 4.5 metres.

Assessable Development			
Specific Outcomes		**Probable Solutions**	
			(Building Act, 1975 Alternative Provision to QDC MP1.2, A2)
S4.	Building Height - (1) The height of a building - (a) is consistent with the predominant building height and scale of surrounding properties; (b) does not obstruct the outlook or views from adjoining dwellings.	**P4.**	(1) The maximum building height does not exceed 8.5 metres above ground level.
S5.	Site Size and Density - The use is on a lot or premises that is consistent with the amenity of the locality and is sufficient in size to provide for the needs of this housing type.	**P5.**	The use complies with the lot size and frontage criteria for the use as detailed in Part 9 - Schedule 5 - Lot Sizes, Table 1 - Use Lot Size. **Note -** Where a dwelling house is located on a lot with an area less than 500m^2, it is defined as a Small Lot House.
S6.	Access and Parking - (1) The use - (a) has sufficient space for on-site carparking to satisfy the projected needs of residents and visitors, appropriate for - (i) the availability of public transport; (ii) the availability of on-street parking; (iii) the desirability of on-street parking in respect to the streetscape; (iv) the residents likelihood to have or need a vehicle; (b) provides a safe and convenient access for residents and visitors; (c) provides car accommodation that does not dominate the appearance of the building when viewed form the street. ***(Building Assessment Provision for the purpose of section 10 of the Building Regulation, 2006)***	**P6.**	(1) The use - (a) has a minimum of two car parking spaces, one of which is covered; (b) parking space dimensions which comply with Table 2 – Minimum Parking Space Dimensions; (c) locates garages behind the front building façade; (d) where in the Urban Residential or Medium Density Residential Zone and includes a garage that faces the street and is classified as part of the class 1a building, has an opening that does not exceed 6 metres; (e) in the case of a two storey building, recesses the garage beneath the upper storey by at least 1.2 metres; (f) has a maximum driveway slope of 1 in 4. **Note -** The maximum slope for a driveway of 1 in 6 is the local government's desired standard.

Assessable Development			
Specific Outcomes		**Probable Solutions**	
			(Building Assessment Provision for the purpose of section 10 of the Building Regulation, 2006)
S7.	Visual Privacy - (1) Privacy between dwelling units on adjoining sites is achieved by effective building design and the location of windows and open space areas to prevent overlooking into habitable rooms or private open space areas. ***(Building Assessment Provision for the purpose of section 10 of the Building Regulation, 2006)*** **Note -** The effective location of windows and balconies to avoid overlooking is preferred to the use of screening devices. Where these are used, they should be integrated with the building design and have minimal negative affect on the resident's or neighbour's amenity.	**P7.**	(1) Where it is proposed that windows or balconies are less than 1.5 metres to the side or rear boundary, privacy between dwelling units is protected by - (a) sill heights being a minimum of 1.5 metres above the adjacent floor level; or (b) obscure glazing for any part of a window that is below 1.5 metres above the adjacent floor level; or (c) providing fixed external screens that are - (i) solid translucent screens; or (ii) perforated panels or trellises that have a maximum of 25 percent openings, with a maximum opening dimension of 50mm and that are permanently fixed and durable; (iii) are offset a minimum of 300mm from the wall of the building. ***(Building Assessment Provision for the purpose of section 10 of the Building Regulation, 2006)***
S8.	Location - The use is located on a premises intended for residential purposes.	**P8.**	No probable solution is identified. **Note -** Refer to the relevant zone code to establish if the use is consistent with that zone.
S9.	Acoustic Amenity - Siting and design achieves a high level of amenity for occupants by minimizing impacts form noise generating areas.	**P9.**	No probable solution identified.

Assessable Development			
Specific Outcomes		**Probable Solutions**	
S10.	Service Facilities - (1) Service facilities are provided to meet the needs of residents and are sited and designed in an unobtrusive and convenient manner; (2) An on-site waste collection system has two wheelie bins stored external to the garage in the cartilage of the dwelling house and screened from view.	**P10.**	(1) No probable solution identified. (2) No probable solution identified.
S11.	Solar Access - (1) The use is designed to ensure that habitable rooms and private open space adjoining dwelling units have sufficient access to daylight and sunlight at all times of the year.	**P11.**	(1) The use complies with the following requirements - (a) solar access to habitable rooms and private open space of adjoining dwelling units – (i) is not reduced to less than 3 hours between 9am and 3pm on June 21; or (ii) where existing overshadowing by building fences is greater that this, sunlight is not further reduced by 20 percent.

Table 1 - Building Siting and Design Requirements

Zone	Maximum Site Coverage	Minimum Setbacks
■ Emerging Urban Community ■ Investigation	1000m^2	(1) For lots that are less than 2 hectares in area, front, side and rear setbacks are 10 metres; or (2) For lots that are 2 hectares or greater in area, front, side and rear setbacks are - (a) 20 metres; or (b) 10 metres where screened by planted landscape; or (3) Sited wholly within a development envelope area approved by the local government, where applicable.
■ Park Residential	30 percent	
■ Rural Non-Urban	2.5 percent	
■ Low Density Residential	30 percent	The *Queensland Development Code, MP1.2,* A1(a) and (b), A2(a) and (b) applies.
■ Medium Density Residential ■ Urban Residential - excluding sub-area UR2	50 percent	
■ Urban Residential - sub-area UR2	40 percent	
■ All other zones	Refer to the applicable zone code for site coverage and the *Queensland Development Code* for setbacks unless stated otherwise.	

Table 2 – Minimum Parking Space Dimensions

Type	Minimum Dimensions
Single Uncovered	4.9 metres x 2.6 metres wide
Single Covered	5.0 metres x 3.0 metres wide
Double Covered	5.0 metres x 5.5 metres wide
Single Garage	6.0 metres x 3.0 metres wide internally
Double Garage	6.0 metres x 5.7 metres wide internally

Division 12 - Estate Sales Office

6.12.1 Introduction

(1) This division contains the provisions for the Estate Sales Office Code, that incorporates -

(a) Compliance with the Estate Sales Office Code (section 6.12.2);

(b) Overall Outcomes of the Estate Sales Office Code (section 6.12.3);

(c) Acceptable Solutions applicable to Self-Assessable Development (section 6.12.4);

(d) Specific Outcomes and Probable Solutions applicable to Assessable Development (section 6.12.5)

6.12.2 Compliance with the Estate Sales Office Code

(1) Development that is consistent with the following complies with the Estate Sales Office Code -

(a) acceptable solutions in section 6.12.4 where self-assessable development; or

(b) specific outcomes in section 6.12.5 where assessable development.

6.12.3 Overall Outcomes of the Estate Sales Office Code

(1) The overall outcomes are the purpose of the Estate Sales Office Code.

(2) The overall outcome sought for the Estate Sales Office Code is the following -

(a) to ensure the use -

(i) promotes and sells lots on an estate or development site for a limited duration;

(ii) maintains the amenity of the surrounding area.

6.12.4 Acceptable Solutions applicable to Self-Assessable Development

Self-Assessable Development	
Acceptable Solutions	
A1.	(1) The use operates for a maximum of 2 years and is - (a) removed from the site if a temporary or relocatable structure, including any connections to infrastructure; or (b) used as a dwelling unit if the structure was built for that purpose; (2) Car parking complies with Table 1 - Minimum On-site Vehicle Parking Requirements in Part 9 - Schedule 1 - Access and Parking.

6.12.5 Specific Outcomes and Probable Solutions applicable to Assessable Developm ent

Assessable Development			
Specific Outcomes		**Probable Solutions**	
S1.	(1) The use is to promote and sell lots on an estate or a development site for a limited duration; (2) The use does not adversely impact on the amenity of the surrounding area.	**P1.**	(1) The use - (a) operates for a maximum of two years and is - (i) removed from the site if a temporary or relocatable structure, including any connections to infrastructure; or (ii) used as a dwelling unit if the structure was built for that purpose; (b) provides car parking that complies with Table 1 - Minimum On-site Vehicle Parking Requirements in Part 9 - Schedule 1 - Access and Parking; (2) No probable solution identified.

Division 13 - Extractive Industry

6.13.1 Introduction

(1) This division contains the provisions for the Extractive Industry Code, that incorporates -

(a) Compliance with the Extractive Industry Code (section 6.13.2);

(b) Overall Outcomes of the Extractive Industry Code (section 6.13.3);

(c) Specific Outcomes and Probable Solutions applicable to Assessable Development (section 6.13.4).

6.13.2 Compliance with the Extractive Industry Code

(1) Development that is consistent with the specific outcomes in section 6.13.4 complies with the Extractive Industry Code.

Note -

Planning Scheme Policy 5 - Environmental Emissions should be referenced for guidance on complying with the requirements of this code.

6.13.3 Overall Outcomes of the Extractive Industry Code

(1) The overall outcomes are the purpose of the Extractive Industry Code.

(2) The overall outcome sought for the Extractive Industry Code is the following -

(a) to ensure the use -

(i) provides for the effective and efficient procurement of extractive resources while protecting the scenic values of the landscape setting;

(ii) is located and designed to minimise or preclude adverse impacts on environmental values;

(iii) does not result in environmental degradation;

(iv) is sited to effectively buffer and mitigate adverse impacts on sensitive receiving environments;

(v) facilitates the efficient on-site transport of extractive materials;

(vi) minimises adverse impacts on surrounding traffic networks;

(vii) effectively and progressively rehabilitates land associated with the use.

6.13.4 Specific Outcomes and Probable Solutions applicable to Assessable Development

Assessable Development			
Specific Outcomes		**Probable Solutions**	
	Site Planning -		
S1.	(1) The use is located and designed to - (a) incorporate buffering to protect adjoining uses from visual impacts arising from extractive activities; (b) make adequate provision for safe and efficient vehicle movement and the haulage of materials within the site; (c) achieve and maintain a high standard of public safety; (2) The use protects the - (a) scenic values of the wider area; (b) environmental values of the site and surrounding area. **Note -** Buffer distances and boundary setbacks are determined having regard to surrounding uses, topography and environmental values.	**P1.**	(1) The use is located and designed with - (a) a densely vegetated buffer or mound having a minimum width of 10 metres to all perimeter boundaries; (b) vehicle haulage roads within the site are surfaced with hardstand, crushed aggregate or similar material, and are of a width suitable to enable the two way movement of haulage vehicles; (c) security fencing precludes unauthorised public access to exposed or active work areas; (2) No probable solution is identified.
	Environmental Emissions -		
S2.1.	All operations area managed to comply with environmental management plans or programs applicable to the site or use.	**P2.1**	No probable solution identified.
S2.2	(1) Excavation, crushing, screening and loading is carried out so as to minimise noise impacts.	**P2.2**	(1) Noise emissions associated with the use - (a) comply with any approval issued under the *Integrated Planning Act 1997* including any concurrence agency conditions imposed by the administering authority for the *Environmental Protection Act 1994*; or (b) comply with the requirements of any environmental authority issued pursuant to the *Environmental Protection Act 1994* in respect of that environmentally relevant activity.

Assessable Development			
Specific Outcomes		**Probable Solutions**	
S2.3.	(1) Noise from blasting activities minimise disturbance to surrounding uses.	**P2.3**	(1) Disturbance to surrounding uses and activities is minimised by - (a) noise from blasting operations, when measured at the boundary of the premises to which the application relates, does not exceed - (i) air blast pressure of 115 dB(Lin) Peak for four (4) out of any five (5) consecutive blasts; (ii) ground vibration of - a. >35Hz maximum of 25mm/s; b. <35Hz maximum of 10mm/s; (b) blasting and other operations are confined to the following periods - (i) blasting operations are limited to the hours of 9.00am to 5.00 pm Monday to Saturday; (ii) other operations are limited to the hours of 6.00 am to 6.00 pm Monday to Friday; (iii) no operations are conducted on Sundays or public holidays. **Note -** Refer to Planning Scheme Policy 5 - Environmental Emissions for further information on noise impacts.
S2.4	(1) The use maintains or enhances stormwater run-off water quality leaving the site; (2) On-site drainage is designed, constructed and maintained to - (a) prevent ponding in excavated areas; (b) avoid erosion and the flow of sediments into stormwater systems, waterways and water supply catchments; (c) prevent the pollution of ground or surface water; (d) provide opportunities to recycle water for use in extractive or processing operations including the washing and screening of extracted material.	**P2.4**	(1) Stormwater leaving the site achieves the water quality objectives detailed in Part 9 - Schedule 11 - Water Quality Objectives; (2) On-site drainage is designed, constructed and maintained to - (a) divert stormwater run-off away from excavated or exposed areas through the construction of banks and channels; (b) detain stormwater run-off from excavated and disturbed areas through the use of sediment basins or associated silt capture devices; (c) reduce erosion by revegetating, or incorporating other treatments such as hydro mulching in areas excavated or otherwise disturbed.

Assessable Development			
Specific Outcomes		**Probable Solutions**	
S2.5	(1) The transport of materials is managed to reduce the potential for the generation of dust nuisance.	**P2.5**	(1) The transport of materials is managed through - (a) vehicle haulage roads within the site are surfaced with hardstand, crushed aggregate or similar material to reduce the potential for the generation of dust; (b) the covering of extractive materials on haulage vehicles. **Note -** Refer to Planning Scheme Policy 5 - Environmental Emissions for further information on air quality impacts.
S6.	Vehicle Access and Movement - (1) Vehicle access to, from and within the site - (a) is adequate for the type and volume of traffic generated by the use; (b) does not adversely impact on the traffic network external to the site. **Note -** A road maintenance levy is required from the Extractive Industry to maintain haulage routes on local government controlled roads based on *Guidelines for Assessment of Road Impacts of Development Proposals 2000*.	**P6.**	(1) The use is serviced by a single access point to the external traffic network - (a) that is located where the external road is a designated haulage routes as identified in Part 9 - Schedule 6 - Movement Network and Road Design, Map 1 - Movement Network; (b) that is not located within 10 metres of any other driveway or intersection external to the site; (c) that is designed with a minimum width of eight (8) metres.
S7.	Rehabilitation - (1) Rehabilitation of the use site occurs in accordance with a rehabilitation plan that provides for - (a) progressive or staged rehabilitation of excavated areas; (b) revegetation of areas cleared, denuded or otherwise disturbed by extractive operations; (c) re-contouring and the reinstatement of appropriate soil profiles.	**P7.**	(1) No probable solution identified.

Division 14 - Forestry

6.14.1 Introduction

(1) This division contains the provisions for the Forestry Code, that incorporates -

(a) Compliance with the Forestry Code (section 6.14.2);

(b) Overall Outcomes of the Forestry Code (section 6.14.3);

(c) Specific Outcomes and Probable Solutions applicable to Assessable Development (section 6.14.4).

6.14.2 Compliance with the Forestry Code

(1) Development that is consistent with the specific outcomes of section 6.14.4 complies with the Forestry Code.

Note -

The following planning scheme policies should be referenced for guidance on complying with the requirements of this code -

- Planning Scheme Policy 5 - Environmental Emissions;
- Planning Scheme Policy 11 - Rural Lands and Uses.

6.14.3 Overall Outcomes of the Forestry Code

(1) The overall outcomes are the purpose of the Forestry Code.

(2) The overall outcome sought for the Forestry Code is the following -

(a) to ensure the use -

(i) is located and operated in a manner that minimises impacts on environment values and adjoining uses;

(ii) provide harvest security by establishing requirements for private plantation developments.

6.14.4 Specific Outcomes and Probable Solutions applicable to Assessable Developm ent

Assessable Development			
Specific Outcomes		**Probable Solutions**	
	Location -		
S1.	(1) The use is consistent with the land capability including - (a) topography; (b) soil conditions; (c) climate; (d) environmental values.	**P1.**	(1) No probable solution identified. **Note -** Refer to the relevant zone code to establish if the use is consistent with that zone.
	Amenity -		
S2.	(1) Forestry is conducted in a manner which - (a) protects environmental values; (b) protects the landscape setting and character of the area; (c) avoids adverse impacts on adjoining and nearby properties through - (i) its location; (ii) limiting post-harvest operations to the primary processing of trees; (d) provides for the stabilisation and rehabilitation of the site following harvesting; (e) minimises bushfire risks.	**P2.**	(1) The use - (a) only incorporates species - (i) in the Environmental Protection Zone - which are native plants to the planning scheme area; or (ii) in the Rural Non-Urban Zone - which are native plants to South East Queensland; (iii) which are not identified in Part 9 - Schedule 12 - Weed Species List - Table 1 or Table 2; (b) adopts a harvesting regime that retains a minimum of 8 native plants per hectare for habitat purposes; (c) ensures that log dumps and primary processing activities are not visible from lookouts, vantage points or sensitive receiving environments; (d) is located such that it complies with the separation distances in Table 1 - Recommended Separation Distances for Forestry; (e) ensures that following harvesting, disturbed landscapes are - (i) stabilised within 4 weeks; (ii) regenerated within 12 months; (f) does not retain stockpiles on-site longer than 4 weeks; (g) is no more than 250 metres from an access track at any point for fire management purposes; (h) where incorporating post-harvest operations - (i) is limited to the primary processing of trees such as production of posts, poles

Assessable Development			
Specific Outcomes		**Probable Solutions**	
			or rails by delimbing, debarking, splitting and/or sawing with a chainsaw; (ii) locates machinery a minimum of 100 metres from any dwelling unit; (iii) restricts operation of machinery to between the hours of 7.00am to 6.00pm from Monday to Saturday; (i) does not incorporate any secondary processing of trees that have been harvested from any property, including portable sawmilling, kiln drying, oil extraction, and/or chemical treatments.
S3.	Haulage - (1) Haulage of logs or timber off-site has minimal impact upon external transport networks and public safety.	**P3.**	(1) Haulage is - (a) not conducted during school bus hours when using local roads; (b) conducted during dry weather on unsealed roads; (c) directed along haulage routes as identified in Part 9 - Schedule 6 - Movement Network and Road Design.
S4.	Property Management Plan - The long-term intentions and management objectives of the use are clearly identified and demonstrate how any potential conflicts or environmental impacts are avoided or minimised.	**P4.**	No probable solution identified. **Note -** To achieve this specific outcome, a property management plan is prepared in accordance with Planning Scheme Policy 11 - Rural Lands and Uses.

Table 1 - Recommended Separation Distances for Forestry

Setback from	Distance (metres)
Sensitive Receiving Environment ■ < 3 hectares ■ > 3 hectares	 40 60
Lot or Premises Boundaries ■ < 3 hectares ■ > 3 hectares	 10 20
Waterways ■ Major ■ Minor	 100 60
Wetlands	100
Electricity Transmission Line	h*2[1]
Existing native forests	40

Note[1] - h*2 - refers to twice tree height at harvest. For practical purposes, the maximum probable height (h) of the tree before harvesting should be used to determine separation distance.

Division 15 - Home Business

6.15.1 Introduction

(1) This division contains the provisions for the Home Business Code, that incorporates -

(a) Compliance with the Home Business Code (section 6.15.2);

(b) Overall Outcomes of the Home Business Code (section 6.15.3);

(c) Acceptable Solutions applicable to Self-Assessable Development (section 6.15.4);

(d) Specific Outcomes and Probable Solutions applicable to Assessable Development (section 6.15.5).

6.15.2 Compliance with the Home Business Code

(1) Development that is consistent with the following complies with the Home Business Code -

(a) acceptable solutions in section 6.15.4 where self-assessable development; or

(b) specific outcomes in section 6.15.5 where assessable development.

6.15.3 Overall Outcomes of the Home Business Code

(1) The overall outcomes are the purpose of the Home Business Code.

(2) The overall outcome sought for the Home Business Code is the following -

(a) to ensure the use -

(i) facilitates business and employment from home in a manner that does not adversely affect the amenity of the surrounding area;

(ii) promotes alternative employment opportunities that do not undermine the role and function of centres or industrial areas.

6.15.4 Acceptable Solutions applicable to Self-Assessable Development

Self-Assessable Development	
Acceptable Solutions	
A1.	(1) The use - (a) is contained within the dwelling unit and does not use more than 60m^2 of gross floor area (GFA); (b) is not located in a domestic outbuilding; (c) is undertaken by permanent residents of the dwelling unit and there are no non-resident employees; (d) does not generate client visitation; (e) does not require any delivery of goods or materials; (f) does not involve the display of goods or materials related to the use; (g) does not involve hiring out of goods, materials, appliances or vehicles from the site; (h) signage - (i) is non-illuminated; (ii) is less than 0.25m^2 in size; (iii) has a maximum height of 1.5 metres from ground level; (iv) displays only the occupier's name, business name, telephone number, website and email address; (v) is attached to the front fencing or building façade; (i) does not emit vibration, odour, fumes, smoke, vapour, steam, soot, ash, dust, grit, oil, radio, electrical interference, or other environmental emissions; (j) does not generate noise, measured as the $L_{Amax,adj,T}$ parameter, at the boundary of the lot or premises, which is greater than - (i) 5 dB(A) above the background noise level between 7am to 10pm; or (ii) 3 dB(A) above the background noise level between 10pm to 7am; (k) does not impose an adverse load on utility infrastructure, compared with the existing dwelling unit; (l) does not generate wastewater; (m) does not involve the preparation of food; (n) does not generate waste in excess of the capacity of the 240 litre bin, compared with existing domestic waste production. **Note -** The $L_{Amax,adj,T}$ parameter is defined in the *Noise Measurement Manual* (Environmental Protection Agency 2000).

6.15.5 Specific Outcomes and Probable Solutions applicable to Assessable Development

Assessable Development			
Specific Outcomes		**Probable Solutions**	
S1.	(1) The use - (a) is associated with a dwelling unit that is being used as a private residence; (b) is low-key in terms of - (i) scale; (ii) operating characteristics; (iii) the number of non-resident employees; (c) does not adversely impact on the amenity or infrastructure of adjoining or nearby properties; (d) is compatible with the level of infrastructure provided to a dwelling unit under normal residential circumstances.	**P1.**	(1) The use - (a) is located - (i) within the dwelling unit and does not use more than 60m^2 GFA; or (ii) outside of the dwelling unit including in a detached structure such as a domestic outbuilding; (b) employs no more than - (i) 2 non-residents; or (ii) in sub-area RN 1 - 5 non-residents; (c) does not - (i) involve the display of goods or materials related to the use; (ii) involve hiring out materials, goods, appliances or vehicles stored off-site; (iii) impose an adverse load on utility infrastructure compared with the existing dwelling unit; (iv) generate regulated, infectious or clinical waste as defined in the *Environmental Protection (Waste Management Regulation) 2000*; (v) generate contaminated waste that requires collection by a licensed waste collector; (vi) generate wastewater that requires connection to a trade waste facility; (vii) emit vibration, odour, fumes, smoke, vapour, steam, soot, ash, dust, grit, oil, radio, electrical interference, or other environmental emissions; (viii) generate noise, measured as the $L_{Amax,adj,T}$ parameter, at the boundary of the lot or premises, which is greater than - a. 5dB(A) above background noise level between 7am to 10pm; or b. 3dB(A) above background noise level between 10pm to 7am;

Assessable Development			
Specific Outcomes		**Probable Solutions**	
			Note - The $L_{Amax,adj,T}$ parameter is defined in the *Noise Measurement Manual* (Environmental Protection Agency 2000). (d) where incorporates advertising signage it is - (i) non-illuminated; (ii) less than 0.5m^2 in size; (iii) has a maximum height of 1.5 metres from ground level; (iv) displays only the occupier's name, business name, telephone number, website and email address; (v) is attached to the front fencing or building façade; (e) where for commercial child care, has a maximum of 7 below school age children on the premises at any time, including children who permanently reside in the house. **Note -** Commercial child care activities are to comply with the *Child Care Act 2002*.
S2.	(1) Traffic generated by a home business is consistent with the expected level of traffic for the area.	**P2.**	(1) Traffic is maintained at a level consistent with the surrounding area, by ensuring - (a) where vehicles are an essential component of the operation of the use, they are - (i) limited to 2 work vehicles, one of which maybe 4.5 tonnes gross vehicle mass (GVM) or greater; (ii) parked to the side or rear of the premises; (b) a designated car parking space is provided on-site for each non-resident employee; (c) one visitor car parking space is provided on-site; (d) a maximum of 3 car parking spaces are provided on-site, except for any additional work related vehicle spaces deemed acceptable under P2.1(1)(a); (e) on-site car parking is not provided within the front setback; (f) the use generates a maximum of -

Assessable Development			
Specific Outcomes		**Probable Solutions**	
			(i) 8 separate client visits per day with an average of no greater than 40 visitations per week; (ii) 2 delivery vehicle visits per week by a delivery vehicle that has a GVM of 4.5 tonnes or less; (g) delivery of goods and materials used by the home business are restricted to the hours between 8am to 6pm. **Note -** On-site car parking requirements may be reduced where it can be demonstrated that sufficient on-street parking exists adjacent to the site frontage for visitors.
S3.	(1) Where the use is for commercial tutelage activities, it is restricted in scale to protect the amenity of surrounding properties.	**P3.**	(1) Where the use is for commercial tutelage activities - (a) there is a maximum number of 6 students at any one time; (b) if for swimming tutelage; classes are undertaken within a domestic size swimming pool. **Note -** Additional on-site visitor parking to that specified in P2.(1)(c) and P2.(1)(d) will be considered, based on the merits of the proposal.

this page purposely
left blank

Division 16 - Intensive Agriculture

6.16.1 Intensive Agriculture Code

(1) This division contains the provisions for the Intensive Agriculture Code, that incorporates -

(a) Compliance with the Intensive Agriculture Code (section 6.16.2);

(b) Overall Outcomes of the Intensive Agriculture Code (section 6.16.3);

(c) Specific Outcomes and Probable Solutions applicable to Assessable Development (section 6.16.4).

6.16.2 Compliance with the Intensive Agriculture Code

(1) Development that is consistent with the specific outcomes of section 6.16.4 complies with the Intensive Agriculture Code.

Note -

The following planning scheme policies will assist in achieving specific outcomes within the Intensive Agriculture Code -

- Planning Scheme Policy 5 - Environmental Emissions;
- Planning Scheme Policy 11 - Rural Lands and Uses.

6.16.3 Overall Outcomes of the Intensive Agriculture Code

(1) The overall outcomes are the purpose of the Intensive Agriculture Code.

(2) The overall outcome sought for the Intensive Agriculture Code is the following -

(a) to ensure the use -

(i) is on a lot or premises of a size and configuration that can accommodate the use without impacting upon adjoining land uses;

(ii) has a site layout and setbacks that facilitate the efficient functioning of the use;

(iii) addresses noise, odour, light and wastes in order to mitigate impacts on health, well-being and amenity;

(iv) contributes to economic and employment growth by protecting the operation of the City's agricultural industry, and promoting its expansion in suitable locations.

6.16.4 Specific Outcomes and Probable Solutions applicable to Assessable Development

Assessable Development			
Specific Outcomes		**Probable Solutions**	
	Location -		
S1.1	(1) The use is consistent with the land capability including - (a) topography; (b) soil conditions; (c) climate; (d) infrastructure services.	**P1.1**	(1) The lot or premises - (a) has land with slopes less than 10 percent (1 in 10); (b) is not on land subject to flooding or inundation in a 1 percent AEP event (1 in 100 year ARI); (c) has sealed road access; (d) has a reliable water supply and the capacity to store a minimum of two days supply; (e) is connected to an electricity supply. **Note -** Refer to the relevant zone code to establish if the use is consistent with that zone.
S1.2	(1) The use is located to ensure compatibility with rural activities on nearby properties to prevent - (a) cross-contamination; (b) disease.	**P1.2**	(1) No probable solution identified.
	Site Size -		
S2.	(1) The use is located on a lot or premises which - (a) is of a size and shape that is consistent with the individual requirements of the activities proposed; (b) maintains the amenity of adjoining properties.	**P2.**	(1) No probable solution identified.
	Site Layout and Building Design -		
S3.1	(1) The setback of the use from boundaries, waterways and other uses - (a) ensures the efficient use of the site; (b) protects the surrounding landscape setting and character; (c) avoids adverse impacts on adjoining and nearby properties; (d) protects environmental values.	**P3.1**	(1) The use - (a) is located in accordance with Table 1 - Recommended Separation Distances for Intensive Agriculture; or (b) where incorporating a buffer area includes a minimum - (i) 20 metre wide vegetated area; (ii) 10 metre wide access strip on both sides of the vegetated area, which are kept clear of vegetation and other flammable materials - refer to Diagram 1.

Assessable Development			
Specific Outcomes		**Probable Solutions**	
			Note - Refer to Planning Scheme Policy 11 - Rural Lands and Uses for further information on vegetated buffers.
S3.2	The height, scale and density of buildings are consistent with the maintenance of the surrounding landscape setting.	**P3.2**	No probable solution identified.
S4.	Environmental Emissions - (1) Noise and odour levels generated by the use minimise adverse environmental or amenity impacts on the surrounding area; (2) Artificial lighting does not result in unreasonable disturbance to any person, activity or native animals.	**P4.**	(1) The use - (a) ensures that noise emissions - (i) at the boundary of the premises comply with Table 2 - Noise levels at the boundary of the lot or premises; or (ii) where an Environmentally Relevant Activity, comply with any approval issued under the *Environmental Protection Act 1994*; (b) does not result in the ambient odour level exceeding 7 OU/m^3; (c) is designed such that major openings in buildings and all areas where work may be conducted are located away from the nearest sensitive receiving environment, other than on the subject premises; (2) Lighting emissions do not exceed levels as detailed in the relevant zone code. **Note -** To assist in achieving this specific outcome, refer to - ■ Planning Scheme Policy 5 - Environmental Emissions; ■ Planning Scheme Policy 11 - Rural Land and Uses.
S5.	Service Facilities - (1) The collection and disposal of animal wastes ensures there is - (a) no on-site or off-site contamination of soil; (b) no adverse impacts on the quality of any receiving waters; (c) no odour impacts on surrounding land uses.	**P5.**	(1) The use ensures that - (a) solid wastes are - (i) collected and placed in weather, fly and vermin proof receptacles; (ii) disposed of via a licensed disposal service; (b) liquid wastes are diverted to - (i) the local government's

Assessable Development			
Specific Outcomes		**Probable Solutions**	
			sewerage system under the conditions of a Trade Waste Permit; or (ii) an on-site wastewater system suitable for the use; or (iii) a holding tank for collection by a licensed liquid waste transporter.
S6.	Drainage - The use provides for environmentally sustainable disposal of on-site stormwater run-off.	**P6.**	All concentrated use areas are provided with site drainage to ensure all nutrient and sediment run-off is directed to detention basins, filtration or other treatment areas. **Note -** Refer to Part 8 - Division 9 - Stormwater Management Code to assist in achieving this specific outcome.
S7.	Property Management Plan - The long-term intentions and management objectives of the use are clearly identified and any potential conflicts or environmental impacts are avoided or minimised.	**P7.**	No probable solution identified. **Note -** To achieve this specific outcome, a property management plan is prepared in accordance with Planning Scheme Policy 11 - Rural Lands and Uses.

Table 1 - Recommended Separation Distances for Intensive Agriculture

Separation distances from[1]	Piggery or Feedlot (metres)[2]	Poultry Farm (metres)	Stable (metres)	Aquaculture (metres)	Intensive Horticultural Production (metres)
Road frontage	500	100	40	40	40
Waterway	major - 200 minor - 120	major - 100 minor - 60	major - 100 minor - 60	major - 100 minor - 60	major - 100 minor - 60
Side or rear boundary	200	100	40	20	100
To any residential zone	2000	500 metres or as determined by an odour impact assessment	200	150	150

Note1 - Separation distances are measured from the setbacks from the property boundaries, unless otherwise specified.

Note 2 - Reference should be also be made to the following Department of Primary Industries and Fisheries publications in determining appropriate separation distances -

- *Reference Manual for the Establishment and Operation of Beef Cattle Feedlots in Queensland* (2000);
- *Separation Guidelines for Queensland Piggeries* (2001).

Table 2 - Noise levels at the boundary of the lot or premises

Period	Noise level at the boundary of the lot or premises[1]
7am - 10pm	Background noise level plus 8 dB(A)
10pm - 7am	Background noise level plus 5 dB(A)

Note[1] - Measured as the adjusted maximum sound pressure level $L_{Amax,adj,T}$ as defined in the *Noise Measurement Manual* (Environmental Protection Agency, 2000)

Diagram 1 - Buffer Area Design

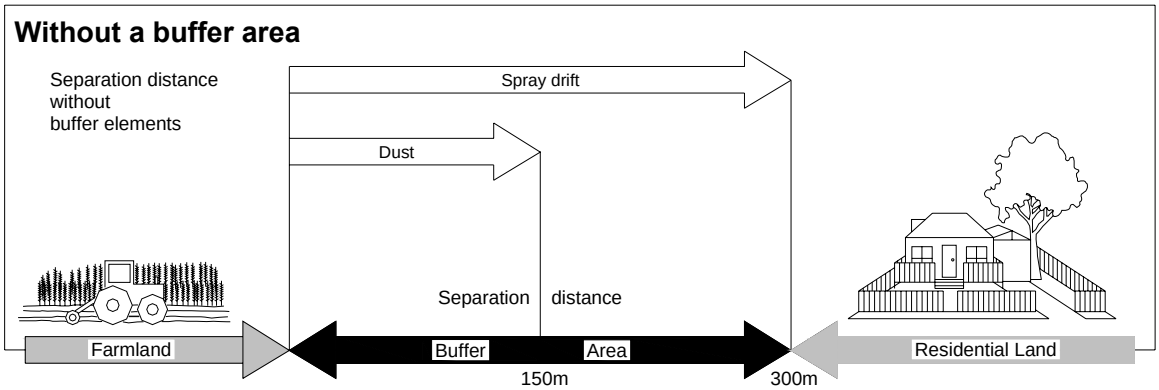

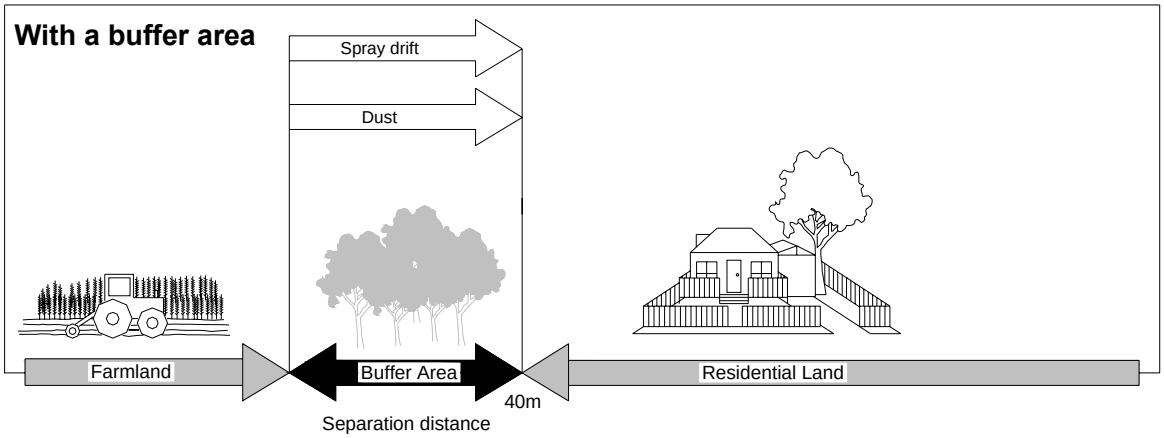

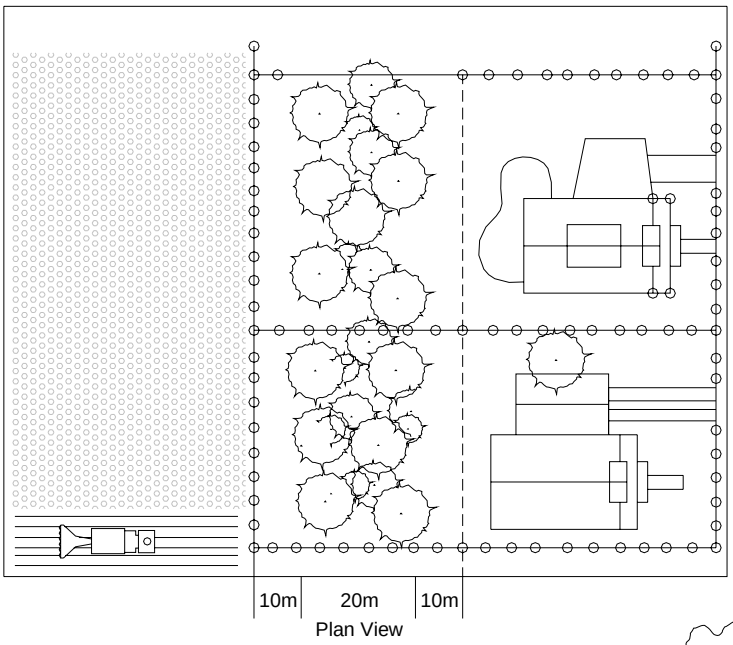

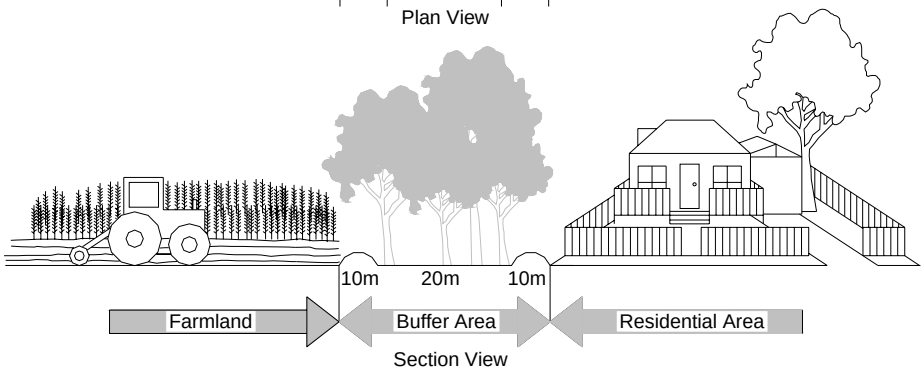

Intensive Agriculture

Division 17 - Mobile Home Park

6.17.1 Introduction

(1) This division contains the provisions for the Mobile Home Park Code, that incorporates -

(a) Compliance with the Mobile Home Park Code (section 6.17.2);

(b) Overall Outcomes of the Mobile Home Park Code (section 6.17.3);

(c) Specific Outcomes and Probable Solutions applicable to Assessable Development (section 6.17.4).

6.17.2 Compliance with the Mobile Home Park Code

(1) Development that is consistent with the specific outcomes of section 6.17.4 complies with the Mobile Home Park Code.

Note -

Planning Scheme Policy 8 - Housing will assist in achieving specific outcomes within the Mobile Home Park Code.

6.17.3 Overall Outcomes of the Mobile Home Park Code

(1) The overall outcomes are the purpose of the Mobile Home Park Code.

(2) The overall outcome sought for the Mobile Home Park Code is the following -

(a) to ensure the use -

(i) provides a greater range of housing types and options to the community;

(ii) is of a sufficient size to accommodate the use and is within close proximity to services and transport;

(iii) is designed and sited to provide for a high quality living environment;

(iv) provides landscaping that protects and enhances visual amenity for adjoining and nearby development;

(v) provides for safe movement of pedestrians and vehicles internally and externally to the lot or premises;

(vi) accommodates on-site service facilities to cater for the needs of residents.

6.17.4 Specific Outcomes and Probable Solutions applicable to Assessable Development

Assessable Development			
Specific Outcomes		**Probable Solutions**	
S1.	Location - (1) The use is located - (a) in an area with convenient access to centres, community services and facilities; (b) within close proximity to public transport.	**P1.**	(1) No probable solution identified. **Note -** Refer to the relevant zone code to establish if the use is consistent with that zone.
S2.	Site Size and Density - (1) The use is on a lot or premises that is of a size and configuration capable of accommodating - (a) individual mobile home units; (b) landscaped buffer areas; (c) associated amenities and facilities; (d) internal roads; (e) servicing requirements such as waste storage and collection areas.	**P2.**	(1) The use is - (a) located on a lot or premises with a minimum area of $4000m^2$; (b) achieves a maximum density of 1 mobile home unit per $200m^2$.
S3.1	Site Layout and Building Design - (1) The layout of the site achieves a high level of amenity for residents by minimising impacts from noise generating areas, such as internal and external roads, car parking areas, communal open space areas, facilities and mechanical equipment.	**P3.1**	(1) No probable solution identified.
S3.2	(1) The use ensures - (a) the layout and design contributes to the establishment of an attractive streetscape; (b) that no individual mobile home site has direct access to an external public road.	**P3.2**	(1) The use - (a) complies with the building height, site coverage and setbacks detailed in Table 1 - Building Siting and Design Requirements; (b) incorporates an area allocated to accommodate each individual mobile home that - (i) has a frontage of at least 12 metres to any internal accessway; (ii) is delineated on the ground and prominently numbered; (c) is accessed from a single vehicular access point from any public street frontage,

Assessable Development			
Specific Outcomes		**Probable Solutions**	
			with access to individual mobile home units provided from an internal street. **Note -** An open carport can be constructed to a side boundary of the mobile home area. Refer to Planning Scheme Policy 8 - Housing, specifically the section on Site Development Plan, Site Analysis Plan and Streetscape Analysis.
S4.	Landscaping - (1) Landscape design contributes to a pleasant, safe and attractive living environment by - (a) retaining existing mature trees; (b) using plants that are native to the area; (c) enhancing privacy and amenity; (d) providing surveillance to communal open space areas and pedestrian paths; (e) responding to climatic conditions. (f) emphasising clear pedestrian entry points that offer good visibility along paths and internal roads; (g) not blocking or interrupting overland flowpaths.	**P4.**	(1) The use is landscaped having regard to the following - (a) planting along external boundaries - (i) are a minimum of 3 metres in width to any public road frontage; (ii) are a minimum of 2 metres in width for all other boundaries; (b) fences within the individual mobile home sites are not more than 900mm in height above ground level and are constructed of lightweight materials; (c) external boundary fences to the premises are not more than 1.2 metres in height above ground level; (d) front external boundary fences of the premises that exceed 10 metres in length are articulated or detailed to provide visual interest; (e) where the side or rear boundaries of the use adjoin open space or parkland, fences are a maximum of 1.2 metres in height.
S5.	Open Space Design - (1) Open space - (a) includes private open space areas that provide privacy for residents; (b) includes communal open space areas that are functional and accessible; (c) is of a useable size and	**P5.**	(1) The use incorporates open space which consists of - (a) communal open space that - (i) is a minimum of 10 percent of the site area; (ii) has a minimum dimension of 20 metres; (iii) is located to provide

Assessable Development			
Specific Outcomes		**Probable Solutions**	
	dimension; (d) is of a suitable slope.		equitable access to all residents; (iv) is clear of obstacles including clothes hoists, accessways, parking spaces and waste containers; (v) has a children's playground; (vi) provides recreational facilities, such as a pool and games room; (b) a private open space area for each individual mobile home site that - (i) is a minimum of $25m^2$; (ii) has a minimum dimension of 3 metres; (iii) has a finished surface of the ground level not steeper than 1 in 14.
S6.	Internal Roads - (1) Adequate provision is made for the safe and convenient movement of vehicles within the site and to external roads.	**P6.**	(1) The use - (a) provides vehicular access to individual mobile home sites and associated buildings from a shared internal loop road supported by a secondary road system that services - (i) less than 20 mobile homes and has - a. a carriageway width of 5.5 metres with widening on curves; b. verge and carriageway width of 8.5 metres with a minimum verge of 1.5 metres; c. functions for pedestrians, cyclists and vehicles; or (ii) 20 or more mobile homes and has - a. a carriageway width of not less than 6.5 metres; b. verge and carriageway width of a minimum of 9.5 metres with a minimum verge of 1.5 metres; c. a footpath not less than 1.2 metres in width in addition to the carriageway.

Assessable Development			
Specific Outcomes		**Probable Solutions**	
	Internal Pedestrian and Cycleway Paths -		
S7.	(1) The pedestrian movement system - (a) enables residents to easily navigate the site; (b) incorporates walkways linking individual mobile home sites with communal facilities; (c) provides comfortable vantage points to rest, socialise and observe surrounding activities; (d) provides a variety of circulation options; (e) links with external pedestrian/cycle paths; (f) provides a series of changing views along pathways by means of building location, landscaping and gradients; (g) provides shade at regular intervals.	**P7.**	(1) Internal pathways, other than on internal roads - (a) are a minimum width of 1.5 metres extending to 3.5 metres when combined with a seating area; (b) comply with *Australian Standard 1428.1-4: 2001 - Design for Access and Mobility*; (c) have a firm, level, well drained non-slip surface; (d) provide suitable pedestrian infrastructure where required to cross internal roads.
	Access and Parking -		
S8.	(1) Access ways, individual driveways and vehicle parking - (a) is safe and convenient for residents, visitors and employees; (b) has an appropriate number of car parking spaces to cater for residents, visitors and employees; (c) are designed to incorporate adequate waste collection manoeuvring and service areas; (d) incorporates landscaping to minimise the expanse of hard surfaces; (e) are - (i) clearly distinguished from pedestrian entries and paths through design, finish or location; (ii) surfaced with materials that provide stormwater infiltration; or (iii) designed to drain to adjacent landscaped areas, other than turning areas. (f) is provided for each mobile home site - (i) on each individual mobile home site; or (ii) in centralised areas that serve a number of sites in	**P8.**	(1) The use and individual mobile home sites comply with (a) the car parking space criteria as detailed in Part 9 - Schedule 1 - Access and Parking - Table 1 - Minimum On-site Vehicle Parking Requirements. (b) waste collection vehicles enter and exit site in a forward gear.

Assessable Development			
Specific Outcomes		**Probable Solutions**	
	convenient locations to each group of sites.		
	Safety and Security -		
S9.	(1) The site layout maximise safety and security by - (a) incorporating lighting along paths, internal roads and in communal open space areas (b) providing for casual surveillance of communal areas, car parking areas, and pedestrian paths.	**P9.**	(1) Maximise safety and security by including - (a) lighting that - (i) is directed towards pedestrian and vehicle entry and exit points, along internal roads and pedestrian paths and communal open space areas; (ii) complies with the provisions of *Australian Standard 4282: 1997 - Control of the obtrusive effects of outdoor lighting*; (b) no probable solution identified. **Note -** To assist in achieving S9. refer to Planning Scheme Policy 16 - Safer By Design.
	Service Facilities -		
S10.1	(1) Service facilities are provided to meet the needs of residents and are sited and designed in an unobtrusive and convenient manner. (2) An on-site waste collection system has - (a) sufficient waste collection vehicle manoeuvring area; (b) a centralised bulk bin storage area.	**P10.1**	(1) The use incorporates service facilities that are designed and located having regard to the following - (a) service structures and mechanical plants are designed as an architectural feature of communal buildings or are effectively screened from view; (b) two bunded car-washing bays are provided; (c) open air clothes drying facilities with a minimum of $10m^2$ per mobile home site are provided in sunny, ventilated and convenient locations that are screened from view from the street, internal driveway and communal open space; (d) fire hydrant installation is consistent with the requirements of *Australian Standard 2419.1: 1996 - Fire Hydrant Installation*; (e) sufficient areas for the storage of waste containers

Assessable Development			
Specific Outcomes		**Probable Solutions**	
			are provided that allow for collection on-site; (f) communal laundry, toilet and washing facilities are located within 100 metres from every mobile home site. (2) No probable solution identified. **Note -** Refer to Part 11 – Planning Scheme Policy 9 – Infrastructure Works - Chapter 16 – Waste Management for further information on waste and recycling container volume, storage, servicing, screening and cleansing.
S10.2	(1) Each individual mobile home site is connected to - (a) reticulated water; (b) reticulated sewerage; (c) stormwater; (d) energy.	**P10.2**	(1) No probable solution identified.

Table 1 - Building Siting and Design Requirements

	Requirement
Building Height	(1) Maximum of 4.5 metres
Site Coverage	(1) Maximum of 40 percent of total site area; (2) Maximum of 40 percent per individual mobile home site
Front Setback	(1) Minimum front setback - (a) to external road frontages - 8 metres; (b) within each individual site - 3 metres from internal road frontages
Side and Rear Setback	(1) Minimum side and rear setback - (a) to the property boundary - 3 metres; (b) within each individual site - 1.5 metres from site boundaries

this page purposely
left blank

Division 18 - Multiple Dwelling

6.18.1 Introduction

(1) This division contains the provisions for the Multiple Dwelling Code, that incorporates -

(a) Compliance with the Multiple Dwelling Code (section 6.18.2);

(b) Overall Outcomes of the Multiple Dwelling Code (section 6.18.3);

(c) Specific Outcomes and Probable Solutions applicable to Assessable Development (section 6.18.4).

6.18.2 Compliance with the Multiple Dwelling Code

(1) Development that is consistent with the specific outcomes of section 6.18.4 complies with the Multiple Dwelling Code.

Note -

Planning Scheme Policy 8 - Housing will assist in achieving specific outcomes within the Multiple Dwelling Code.

6.18.3 Overall Outcomes of the Multiple Dwelling Code

(1) The overall outcomes are the purpose of the Multiple Dwelling Code.

(2) The overall outcome sought for the Multiple Dwelling Code is the following -

(a) to ensure the use -

(i) provides a greater range of housing types to the community;

(ii) ensures the design and siting of the use provides for a high quality living environment;

(iii) maintains a high standard of residential amenity;

(iv) complements the character of the surrounding area.

6.18.4 Specific Outcomes and Probable Solutions applicable to Assessable Development

Assessable Development			
Specific Outcomes		**Probable Solutions**	
S1.	Location - (1) The use is located - (a) in areas zoned for mid rise residential development; (b) within close proximity to centres, community services and facilities and public transport.	**P1.**	(1) No probable solution identified. **Note -** Refer to the relevant zone code to establish if the use is consistent with that zone.
S2.	Site Size and Density - (1) The use is on a lot or premises that is consistent with the amenity of the locality and is sufficient in size to provide for the needs of the housing type.	**P2.**	(1) The use complies with - (a) the lot size and frontage criteria for the use as detailed in Part 9 - Schedule 5 - Lot Sizes, Table 1 - Use Lot Size; (b) the density as detailed in the relevant zone code.
S3.	Site Layout and Building Design - (1) Layout and design enhances the built form of the surrounding streetscape by - (a) contributing to the establishment of an attractive streetscape in new areas; (b) ensuring the use addresses the street frontage; (c) varying the built form appearance of each dwelling unit to provide a diversity of building styles; (d) reducing building bulk through a combination of verandahs, recesses and variations in building form and materials; (e) elevations using a variety of materials, colours and/or textures between levels; (f) roofs being pitched, articulated, gabled or provided with other features to avoid single plane rooflines; (g) buildings on sloping sites being designed to produce a stepped pattern involving roof ridges, guttering, balustrade and floor levels; (h) ensuring building height and site coverage is consistent with the proposed height and scale in the locality; (i) where the built form is taller or wider than the type of building expected in the street - then	**P3.**	(1) The use complies with the following requirements - (a) building height, site coverage and setbacks - as per Table 1 - Building Siting and Design Requirements; (b) the difference in building height between the use and adjoining buildings is not more than one storey when viewed from - (i) the public street, or (ii) a minimum of 10 metres from the side property boundary - refer to Diagram 1; (c) addresses the street by presenting the front door and/or habitable room windows to the street; (d) the maximum unbroken length of a dwelling unit or group of dwelling units is fifteen (15) metres in length; (e) single vehicle access is provided to the use from the public street frontage; (f) access to individual dwelling units is provided from an internal street; (g) solar access to habitable rooms and private open space of adjoining dwelling units - (i) is not reduced to less

Assessable Development			
Specific Outcomes		**Probable Solutions**	
	the use is articulated into clearly distinguishable parts, similar in scale to existing housing, so that individual dwelling units can be identified from the street; (j) ensuring setbacks complement the existing streetscape and maximise private open space areas, privacy, solar access and provide for service areas; (k) ensuring the streetscape is not affected by multiple access points or the dominance of garages.		than 3 hours between 9am and 3pm on June 21; or (ii) where existing overshadowing by building and fences is greater than this, sunlight is not further reduced by 20 percent. **Note -** Refer to Planning Scheme Policy 8 - Housing, specifically the section on Site Development Plan, Site Analysis Plan and Streetscape Analysis.
S4.	Visual Privacy - (1) Privacy between dwelling units on the site and adjoining sites is achieved by effective building design and the location of windows and outdoor open spaces to prevent overlooking into habitable rooms or private open space areas. **Note -** ■ The effective location of windows and balconies to avoid overlooking is preferred to the use of screening devices. Where these are used, they should be integrated with the building design and have minimal negative affect on the resident's or neighbour's amenity. ■ Refer to Diagram 2 and 3.	**P4.**	(1) The use complies with the following - (a) where habitable room windows are directly adjacent to habitable rooms of adjoining dwelling units and are within a distance of 6 metres and within an angle of 45 degrees, privacy is protected by - (i) sill heights being a minimum of 1.5 metres above floor level; or (ii) providing fixed translucent, such as frosted or textured glazing, for any part of the window below 1.5 metres above floor level; or (iii) providing fixed external screens; (b) where incorporating screening devices they are - (i) solid translucent screens; or (ii) perforated panels or trellises that have a maximum of 25 percent openings, with a maximum opening dimension of 50mm and that are permanently fixed and durable; (iii) are offset a minimum of 300mm from the wall of the building; (c) outlook from windows, balconies, stairs, landings, terraces and decks and other private areas, is obscured or screened where a direct view

Assessable Development			
Specific Outcomes		**Probable Solutions**	
			is available into the private open space of another dwelling unit by - (i) screening devices as detailed in P4.(1)(a) and (b); or (ii) incorporating existing or new landscape planting that will achieve a minimum of 2 metres in height at maturity.
S5.	Acoustic Amenity - Siting and design achieves a high level of amenity for occupants by minimising impacts from noise generating areas, such as streets, driveways, car parking areas, service areas, private and communal open space areas and mechanical equipment.	**P5.**	No probable solution identified. **Note -** Shared walls and floors between dwellings are constructed in accordance with the noise transmission and insulation requirements of the *Building Code of Australia.*
S6.	Landscaping - (1) Landscape design contributes to a pleasant, safe and attractive living environment by - (a) retaining existing mature trees; (b) using plants that are native to the area; (c) enhancing privacy, surveillance and amenity; (d) providing surveillance to communal open space areas and pedestrian paths; (e) enhancing climatic conditions; (f) emphasising clear pedestrian entry points that offer good visibility along paths and driveways; (g) planting being used to frame views and view corridors through the main pedestrian pathways of the site; (h) incorporating semi-transparent fencing and planted landscaping as a buffer between communal areas and private open space areas; (i) not blocking or interrupting overland flowpaths.	**P6.**	(1) The use incorporates the following landscaping - (a) 15 percent of the site is planted/grassed landscaping, rather than hardstand, in addition to open space requirements; (b) a 2 metre planted area along the length of any public road frontage; (c) fences forward of the building frontage - (i) are not more than - a. 1.2 metres in height above ground level where of solid construction; or b. 1.8 metres in height above ground level where the fence is at least 30 percent transparent - refer to Diagram 4; (ii) where exceeding 10 metres in length, are articulated or detailed to provide visual interest; (d) where the side or rear boundaries adjoin open space or parkland, fences are a maximum of 1.2 metres in height; (e) where the front fence is lower

Assessable Development			
Specific Outcomes		**Probable Solutions**	
			than the side boundary fence, it is tapered to the maximum height of the side boundary fence at or behind the front building line; (f) internal fences do not exceed 1.2 metres in height.
S7.	Open Space Design - (1) Open space - (a) includes a clearly designated private open space area that provides privacy for residents and is directly accessible from the main living area; (b) includes communal open space areas that are functional and accessible; (c) is of a useable size and dimension; (d) is of a suitable gradient; (e) is capable of receiving sufficient sunlight; (2) is located behind the building frontage, and where above ground protects the privacy of adjoining and nearby properties.	**P7.**	(1) 20 percent of the site is provided at ground level and consists of - **Note -** This area may contain private and communal open space areas that are at ground level. (a) for each dwelling unit - provide a designated private open space area that - (i) at ground level - is a minimum of $25m^2$ with a minimum dimension of 4 metres; or (ii) where additional open space is provided above ground level - is a minimum of $10m^2$ with a minimum dimension of 2.5 metres; (iii) is directly accessible from the main living area - refer to Diagram 5; (iv) receives at least 3 hours of sunlight between 9am and 3pm on June 21 over 100 percent of the area; (v) is orientated within 20 degrees of north; **Note -** In circumstances where the land gradient is unsuitable to provide the required private open space at ground level, above ground level decks and balconies may constitute a higher proportion of the total required private open space area. (b) where including 10 or more dwelling units - a single communal open space area consisting of a minimum of 5 percent of the total site area with a minimum dimension of 5 metres; (c) the finished surface of the

Assessable Development			
Specific Outcomes		**Probable Solutions**	
			ground level for private and communal open space area is not steeper than 1 in 14.
S8.	Access and Parking - (1) Accessways, driveways and vehicle parking - (a) is safe and convenient for residents and visitors; (b) has an appropriate number of car parking spaces to cater for residents and visitors; (c) does not dominate the streetscape or the building form when viewed from the street; (d) is compatible with the overall building design in terms of height, roof form, detail, materials and colours; (e) includes clearly defined manouevring and service areas; (f) incorporates landscaping to minimise the expanse of hard surfaces; (g) are clearly distinguished from pedestrian entries and paths through design, finish or location; (h) are surfaced with materials that provide stormwater infiltration or are designed to drain to adjacent landscaped areas, other than turning areas.	**P8.**	(1) The use complies with - (a) the car parking space provision criteria as detailed in Part 9 - Schedule 1 - Access and Parking - Table 1 - Minimum On-site Vehicle Parking Requirements; (b) garages are located behind the front building façade; (c) in the case of a two storey building, the garage is recessed beneath the upper storey by at least 1.2 metres; (d) the maximum straight alignment of a driveway is 20 metres; (e) driveways and internal accessway are finished with non-slip materials such as brick, clay or concrete pavers, exposed aggregate, stamped pigmented concrete, bitumen or permeable materials; (f) the maximum slope of any driveways serving the site or individual dwelling units does not exceed 1 in 6; (g) the building setback accommodates a tandem car park space on the driveway for each dwelling unit.
S9.	Internal Pedestrian and Cycleway Paths - (1) The pedestrian and cycle movement system - (a) enables residents to easily navigate the site; (b) incorporates walkways linking dwelling units to communal open space areas; (c) provides comfortable vantage points to rest, socialise and observe surrounding activities; (d) provides a variety of circulation options; (e) links with external pedestrian and cycle paths; (f) is well lit; (g) provides a series of changing views along pathways by means of building location, landscaping and gradients.	**P9.**	(1) Internal pathways - (a) are a width of 2 metres extending to 3.5 metres when combined with a seating area; (b) comply with *Australian Standard 1428.1-4: 2001 - Design for Access and Mobility*; (c) have a firm, level, well drained non-slip surface; (d) provide suitable pedestrian infrastructure where required to cross internal accessways; (e) provide shade at regular intervals.

Assessable Development			
Specific Outcomes		**Probable Solutions**	
	Safety and Security -		
S10.	(1) Site layout, building design and lighting - (a) maximises safety and security of residents; (b) provides for casual surveillance of the street, dwelling unit, entries, communal areas, car parking areas and pedestrian paths.	**P10.**	(1) Maximise safety and security by - (a) providing movement sensitive lighting for dwelling unit entries, car parking areas and pedestrian paths that complies with the provisions of *Australian Standard 4282: 1997 - Control of the obtrusive effects of outdoor lighting* - refer to Diagram 6; (b) allowing visitors who approach the front door to be seen without the need to open the door - refer to Diagram 6; (c) for above ground private open space areas - allowing overlooking of internal and external streets or communal outdoor areas. **Note -** To assist in achieving S10. refer to Planning Scheme Policy 16 - Safer By Design.
	Service Facilities -		
S11.	(1) Service facilities are provided to meet the needs of residents and are sited and designed in an unobtrusive and convenient manner. (2) An on-site waste collection system has - (a) an internal road network allowing the waste collection vehicle to service wheelie bins from independent dwelling units; or (b) an internal bulk bin collection system to service semi-independent or dependent units.	**P11.**	(1) Service facilities and structures - (a) are designed as an architectural feature of the building or are effectively screened from view; (b) provide mechanical dryers and/or communal open space drying facilities in at least one area where more than 25 percent of dwelling units do not have access to ground floor level private open space; (c) provide open air clothes drying facilities with a minimum of 10m^2 in sunny, ventilated and convenient locations that are screened from view from the street, internal driveway and communal recreation areas; (d) provide at least one bunded car washing bay; (e) provide for fire hydrant installation consistent with the requirements of *Australian Standard 2419.1: 1996 - Fire Hydrant Installation*; (f) depending on the waste collection system provided - (i) allow for on-site

Assessable Development			
Specific Outcomes			Probable Solutions
			centralised collection; (ii) sufficient on-street collection; (iii) an internal road network that allows the waste collection vehicle to service individual dwelling units; (g) locate the waste compound in a hardstand impermeable area that is screened and landscaped to blend in with the immediate surrounds; (h) provide individual dwelling units with storage space that achieves the following minimum requirements - (i) lockable external accessible area of $3m^2$; (ii) height of 2.1 metres; (iii) screened from public view. **Note -** ■ This space may form part of a carport or garage; ■ Storage areas are exclusive of private open space areas. (2) No probable solution identified. **Note -** ■ Refer to Part 11 – Planning Scheme Policy 9 – Infrastructure Works – Chapter 16 – Waste Management for further information on waste and recycling container volume, storage, servicing, screening and cleansing. ■ Refer to Part 8 – Division 1 – Access and Parking for additional servicing requirements.

Table 1 - Building Siting and Design Requirements

Standard	Requirement
Overall Building Height	As specified in relevant zone code
Floor Height of Highest Habitable Room	(1) As specified in relevant zone code; or (2) As specified in Table 2 - Maximum Height to the Top of the Floor Level of Highest Habitable Room
Site Coverage	(1) A maximum of - (a) in the Urban Residential Zone - sub-areas UR1 and UR2 - (i) 1 storey - 35 percent; or (ii) 2 storey - 30 percent; or (b) in the Medium Density Residential Zone - 40 percent; or (c) in the Medium Density Residential Zone - sub-areas MDR1 and MDR2 - 45 percent; or (2) As specified in relevant zone code
Front Setback	(1) A minimum of 6 metres
Side Setback	(1) A minimum of - (a) in the Urban Residential Zone - sub-areas UR1and UR2 - (i) 1.5 metres on the ground floor; (ii) 6 metres on 2nd or 3rd storey, or 4 metres where window sills are 1.5 metres above floor level and balconies are screened; or (b) in the Medium Density Residential Zone - (i) where the building is - a. less than 4.5 metres in height - 1.5 metres; b. between 4.5 metres and 7.5 metres in height - 2 metres; c. greater than 7.5 metres in height - 2 metres plus 0.5 metres for every 3 metres or part thereof by which the building exceeds 7.5 metres; (c) in the above Zones and where open space is located in the side setback - (i) 4 metres for the extent of private open space; (ii) 5 metres for the extent of communal open space; or (d) as specified in relevant zone code
Rear Setback	(1) A minimum of - (a) in the Urban Residential Zone - sub-areas UR1 and UR2 - (i) 4 metres on ground floor; (ii) 6 metres on 2nd storey or 4 metres where window sills are 1.5 metres above floor level and balconies are screened; (b) in the Medium Density Residential Zone - 4 metres; (c) in the above Zones and where open space is located in the rear setback a - (i) 4 metres for the extent of private open space; (ii) 5 metres for the extent of communal open space

Table 2 - Maximum Height to the Top of the Floor Level of Highest Habitable Room

Location		Maximum Height to the Top of the Floor Level of Highest Habitable Room
General		
Urban Residential Zone - sub-areas UR1 and UR2		3.5 metres (2 storey)
Medium Density Residential Zone - other than sub-area MDR1 and a number of MDR3 sites		7 metres (3 storey)
Medium Density Residential Zone- sub-area MDR1 sites		
Capalaba - Refer to Map 1/5 of Medium Density Residential Zone Code		
1	Moreton Bay Road, Pittwin Road North	16 metres (6 storey)
2	Mount Cotton Road	13 metres (5 storey)
Cleveland - Refer to Map 2/5 of Medium Density Residential Zone Code		
3	Haggup Street, Queen Street, Waterloo Street	13 metres (5 storey)
4	Michelle Court	13 metres (5 storey)
5	Shore Street, Middle Street, Island Street	13 metres (5 storey)
6	Channel Street, Shore Street, Middle Street	16 metres (6 storey)
7	Passage Street	13 metres (5 storey)
8	Queen Street, Passage Street, Middle Street	7 metres (3 storey)
9	Middle Street, Shore Street, Wharf Street	13 metres (5 storey)
10	Wharf Street, Shore Street, Middle Street	13 metres (5 storey)
11	North Street, Shore Street East	7 metres (3 storey)
Redland Bay - Refer to Map 3/5 of Medium Density Residential Zone Code		
12	Boundary Street, Broadwater Terrace, Esplanade, Stradbroke Street	7 metres (3 storey)
13A	Hamilton Street, Esplanade, Peel Street	13 metres (5 storey)
13B	Hamilton Street, Esplanade, Peel Street	7 metres (3 storey)
14	Gladstone Street, Peel Street and Broadwater Terrace	7 metres (3 storey)
15	Weinam Street, Banana Street, Outridge Street, Hamilton Street, Meissner Street	7 metres (3 storey)
Coochiemudlo Island - Refer to Map 4/5 of Medium Density Residential Zone Code		
16	Victoria Parade	7 metres (3 storey)
Medium Density Residential Zone - sub-area MDR3 sites		
Redland Bay - Refer to Map 5/5 of Medium Density Residential Zone Code		
17	Salisbury Street	8 metres (3 storey)
18	Salisbury Street	7 metres (3 storey)
19	Salisbury Street	(2 storey)
20	Salisbury Street	(1-3 storey)
21	Salisbury Street	(1 storey)

Diagram 1 - Height between adjoining developments

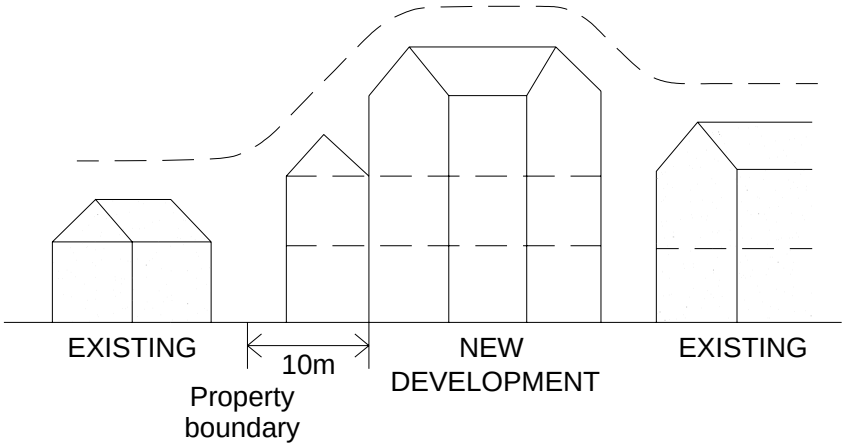

Diagram 2 - Design techniques to reduce overlooking

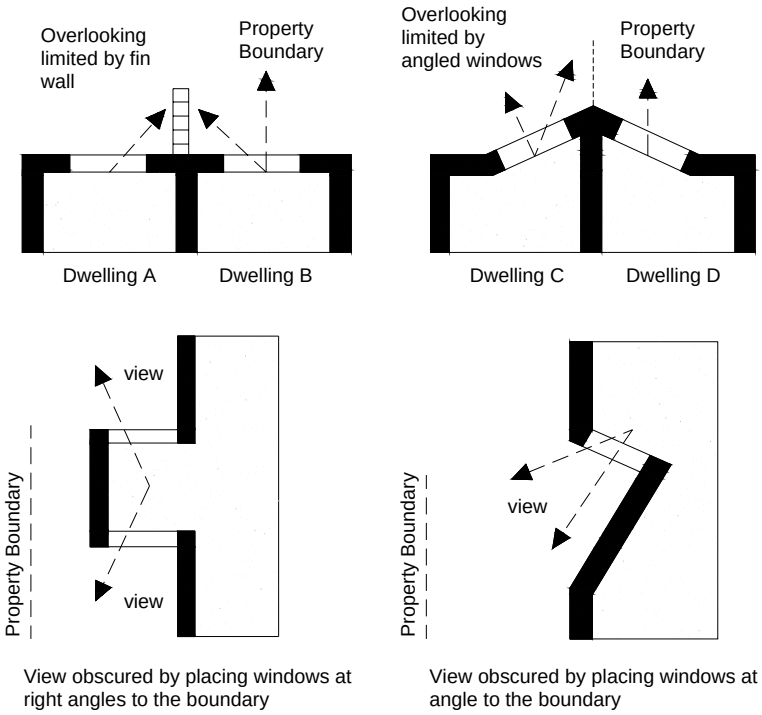

Diagram 3 - Situations where screening is required

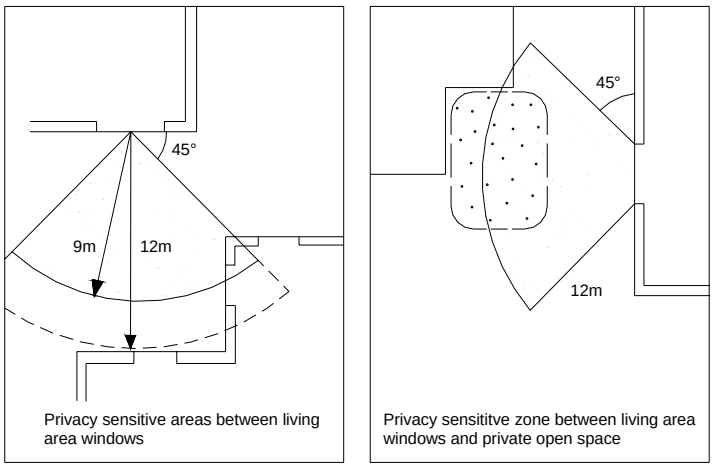

Multiple Dwelling

Diagram 4 - Front fencing design

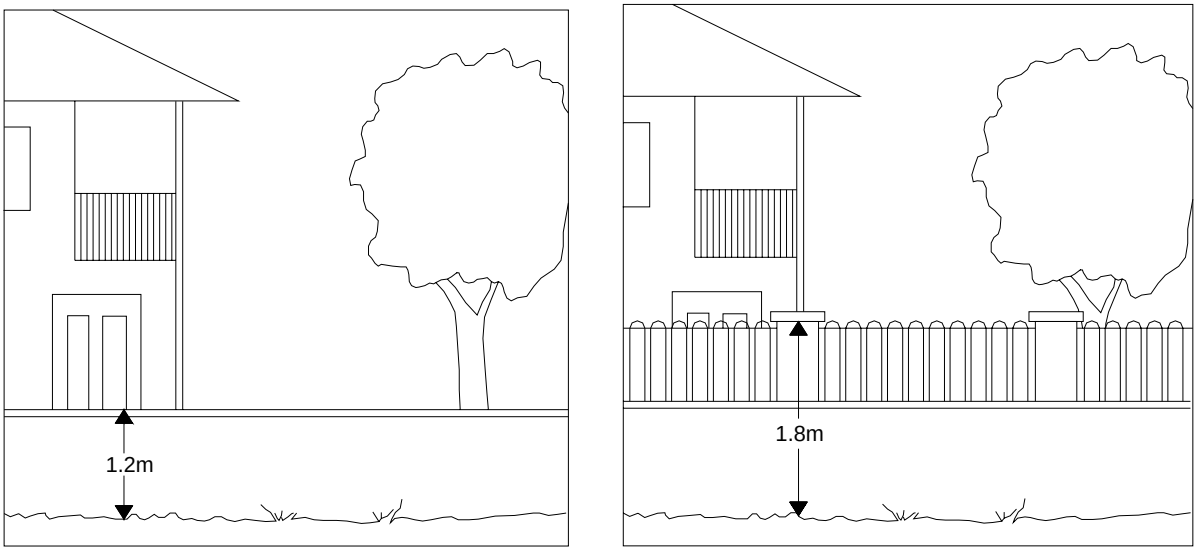

Diagram 5 - Design of private open space

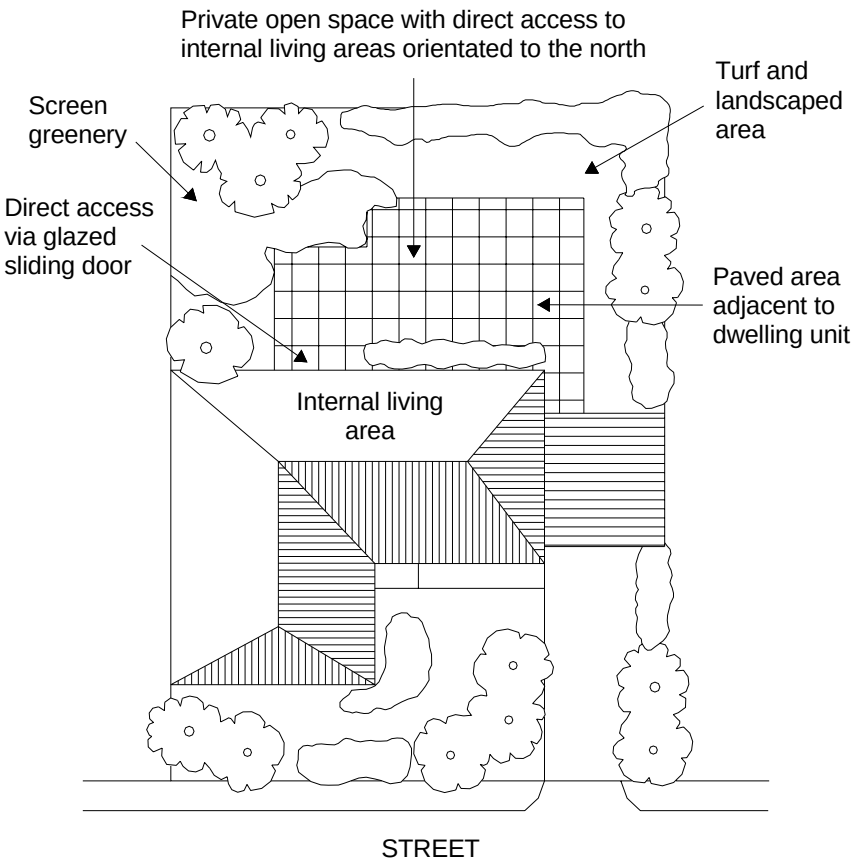

Diagram 6 - Design for casual surveillance

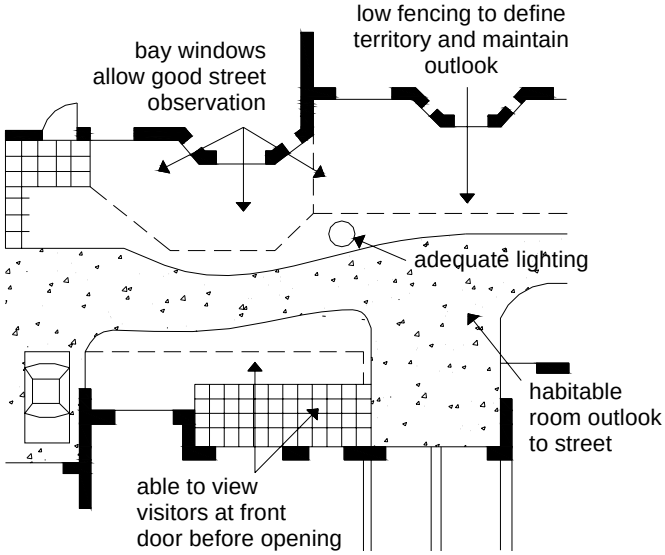

this page purposely
left blank

Division 19 - Outdoor Dining

6.19.1 Outdoor Dining

(1) This division contains the provisions for the Outdoor Dining Code, that incorporates -

(a) Compliance with the Outdoor Dining Code (section 6.19.2);

(b) Overall Outcomes of the Outdoor Dining Code (section 6.19.3);

(c) Specific Outcomes and Probable Solutions applicable to Assessable Development (section 6.19.4).

6.19.2 Compliance with the Outdoor Dining Code

(1) Development that is consistent with the specific outcomes in section 6.19.4 complies with the Outdoor Dining Code.

Note -

Planning Scheme Policy 10 - Outdoor Dining will assist in achieving specific outcomes within the Outdoor Dining Code.

6.19.3 Overall Outcomes of the Outdoor Dining Code

(1) The overall outcomes are the purpose of the Outdoor Dining Code.

(2) The overall outcome sought for the Outdoor Dining Code is the following -

(a) to ensure the use -

(i) provides for outdoor dining on public land;

(ii) is designed having regard to -
a. the characteristics of the footpath area and the adjoining roadway;
b. maintenance of pedestrian safety and public access;

(iii) enhances the character, amenity, streetscape setting and ambience of the surrounding area.

6.19.4 Specific Outcomes and Probable Solutions applicable to Assessable Development

Assessable Development			
Specific Outcomes		**Probable Solutions**	
S1.	Location - (1) The use is located having regard to - (a) potential areas of conflict or public risk; (b) footpath grade and cross fall; (c) road hierarchy and adjoining traffic conditions; (d) sight lines of approaching traffic; (e) sight lines of vehicles entering or leaving a site or adjoining sites across the public footpath.	**P1.**	(1) The use - (a) is not located - (i) near taxi ranks or bus stops; (ii) near designated loading or service vehicle parking or standing areas characterised by - a. frequent heavy vehicle movements; or b. the loading and unloading of goods and passengers; (iii) in areas with a grade steeper than the acceptable limits specified in *Australian Standard 1428.1:2001 - Design for access and mobility - General requirements for access - New building work*; (b) where adjoining a road carriageway is - (i) separated from the road carriageway by bollards or other similar roadside protective measures; or (ii) located away from the road carriageway, for example, adjacent to the building line; or (iii) separated from the road carriageway by car parking; or (iv) located adjacent to a shared use environment with a maximum speed limit of 20km/hr. **Note -** Refer to Photograph 1 - Location of roadside protective measures.
S2.	Site Layout - (1) The use - (a) is compatible in size with the associated premises; (b) does not inhibit use of or access to existing street activities and structures; (c) provides separation distances that allow safe and	**P2.**	(1) The use - (a) is sited - (i) within the footpath frontage of the associated refreshment establishment; (ii) in areas which have a minimum useable width of 3.5 metres after achieving

Assessable Development			
Specific Outcomes		**Probable Solutions**	
	unobstructed access - (i) in and around outdoor dining furniture; (ii) to adjoining sites; (iii) to emergency accessways.		the minimum clearances; **Note -** ■ Refer to Diagram 1 - Outdoor dining layout; ■ Outdoor dining is only extended beyond the frontage of the associated refreshment establishment if neighbouring businesses provide written acceptance and the local government approves the extension. (b) allows queuing for meals or seating to occur only within the associated refreshment establishment, not within the footpath area; (c) is not sited - (i) over tactile paving; or (ii) within 2 metres of access ramps or hand rails; (d) ensures a minimum 2 metre overhead clearance for pedestrian access is maintained throughout the outdoor dining area, including where umbrellas or fixed screens are used; (e) ensures a minimum 2 metre wide pedestrian corridor is provided through outdoor dining areas which - (i) is kept clear of all obstructions, including A-framed signage such as sandwich boards; (ii) provides the most direct route possible along the footpath; (iii) provides protection from the weather; (f) is clear of any vehicle accessways across the footpath; (g) where located adjacent to car parking for persons with disabilities, the outdoor dining area incorporates a 1.2 metre wide path from the car space to the pedestrian corridor; **Note -** ■ Refer to - ▸ Diagram 2 - Vertical clearances; ▸ Diagram 3 - Pedestrian corridor; ▸ Photograph 2 - Suitable vertical

Assessable Development			
Specific Outcomes		**Probable Solutions**	
			clearance; ▸ Photograph 3 - Suitable pedestrian corridor; ▸ Photograph 4 - Obstructed pedestrian corridor; ▸ Photograph 6 - Tactile paving free of obstructions; ■ A larger minimum distance may be required where pedestrian usage is of a density determined by the local government as requiring an increased pedestrian corridor. (h) structures permanently fixed to the pavement do not obstruct convenient access to utility infrastructure. **Note -** ■ Any structures permanently fixed on public land require a "Permit to Occupy" to be approved by the State Government through Natural Resources, Mines and Energy; ■ Operators are required to remove fixed outdoor furniture upon reasonable demand by Telstra, Energex or other utility infrastructure providers if access to infrastructure is required; ■ Removable tables and chairs are permitted above underground utility infrastructure.
S3.	Amenity and Character - (1) The use - (a) is visually compatible with streetscape features; (b) contributes positively to the pedestrian experience by presenting an open, inviting space, readily accessible from the footpath; (c) provides cross ventilation, shade and protection from adverse weather conditions. **Note -** ■ Umbrellas and fixed screens may be used to provide protection from the weather provided they do not encroach upon pedestrian access.	**P3.**	(1) For outdoor dining areas - (a) style, layout and orientation of furniture is consistent with the extent and shape of the available space; (b) the space is defined by planter boxes, bollards or surface markers; (c) barricade fencing and permanently enclosed pavilions and structures are not included; (d) design and orientation has regard to climatic conditions, namely late afternoon sun and prevailing winds; (e) the surface is constructed with a level, non-slip finish.

Assessable Development			
Specific Outcomes		**Probable Solutions**	
S4.	Noise - Noise generated by the use does not impact adversely on adjoining and nearby premises.	**P4.**	No probable solution identified.
S5.	Furniture - (1) Furniture for the use maintains safety and makes a positive contribution to the amenity of the streetscape.	**P5.**	(1) Outdoor dining furniture - (a) is located - (i) 900mm from kerb edges where there are no designated car parking bays within the road carriageway; or (ii) 1.5 metres from parallel and angled car parking spaces ; (iii) a minimum of 3 metres from any water's edge; (iv) 1 metre from safety rails to waterways; (v) 1.2 metres from waste containers; (vi) 500mm from the building line; (vii) 1 metre from the base of existing trees or the tree guard, if one exists; (viii) 900mm from all other existing structures; (b) is strong, durable and weather resistant; (c) does not contain parts or extensions that may be a potential hazard to patrons and pedestrians; (d) is compatible with the materials and colours in the surrounding streetscape; (e) is removable when not fixed to the footpath and is stored in the associated refreshment establishment outside of trading hours; (f) when fixed to the footpath is anchored according to the manufacturers specifications; (g) where an electrical or gas heating or cooling device, is fitted with an emergency shut off switch; (h) does not include BBQs or coke filled burners. **Note -** ■ Refer to - ▸ Diagram 4 - Setbacks from carparking,

Assessable Development			
Specific Outcomes		**Probable Solutions**	
			▸ Photograph 5 - Insufficient separation to kerb; ▸ Photograph 7 - Outdoor dining making a positive contribution to the streetscape; ■ Plastic tables and chairs are not considered acceptable due to rapid deterioration in the urban environment; ■ Refer to Part 11 - Planning Scheme Policy 10 - Outdoor Dining for additional requirements.
S6.	Logo Signage - (1) Logo signage shown on outdoor dining furniture is discrete and does not dominate the structure on which it is displayed.	**P6.**	(1) Logo signage - (a) on umbrellas and shade devices is restricted to 2 labels; (b) discretely displayed on chairs, tables or planter boxes may be appropriate as an alternative to umbrellas and other shade devices. **Note -** All logo signage to be used is clearly detailed to scale as part of the application process and needs to be approved by the local government.
S7.	Patrons are provided with easily accessible public toilet facilities.	**P7.**	The number, location and design of publicly assessable toilets comply with the requirements of the *Building Code of Australia (BCA)*.

Diagram 1 - Outdoor dining layout

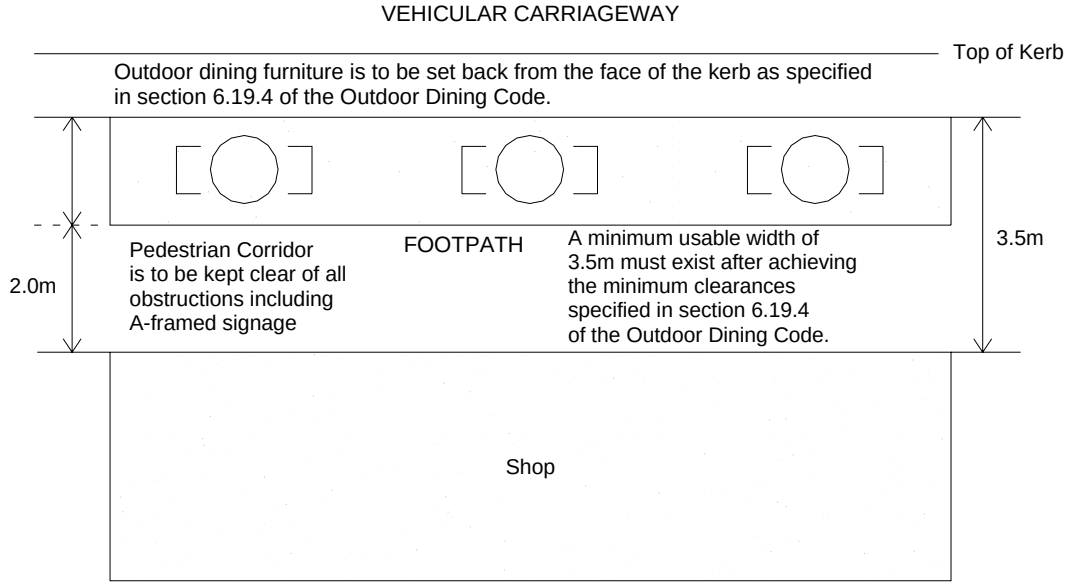

Note: the above minimum requirements may be increased on merit where the objectives of this code cannot reasonably be achieved to the Local Government's satisfaction.

Diagram 2 - Vertical clearances

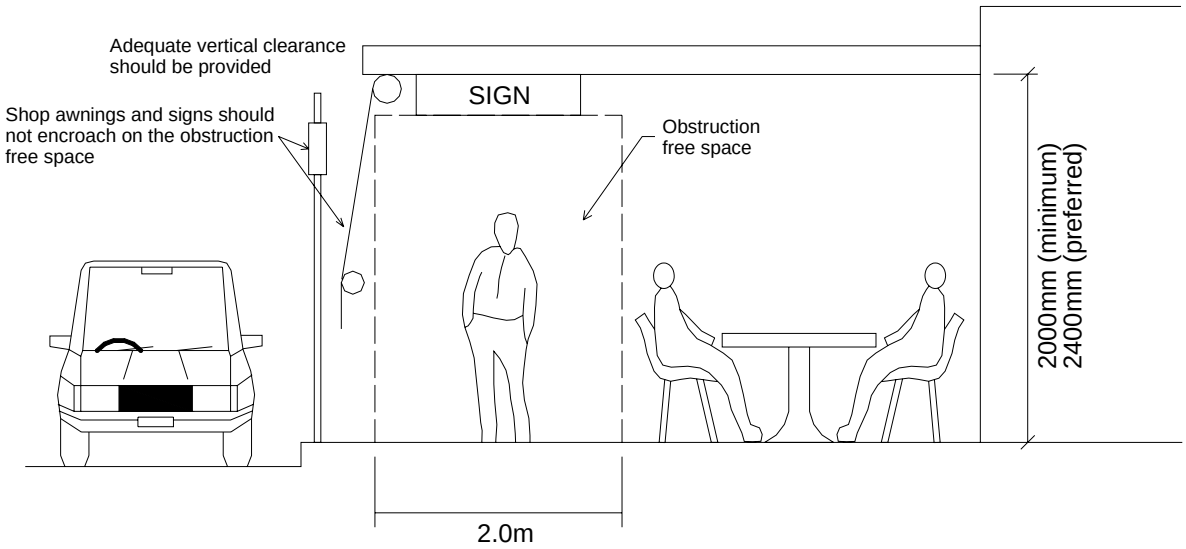

Diagram 3 - Pedestrian corridor

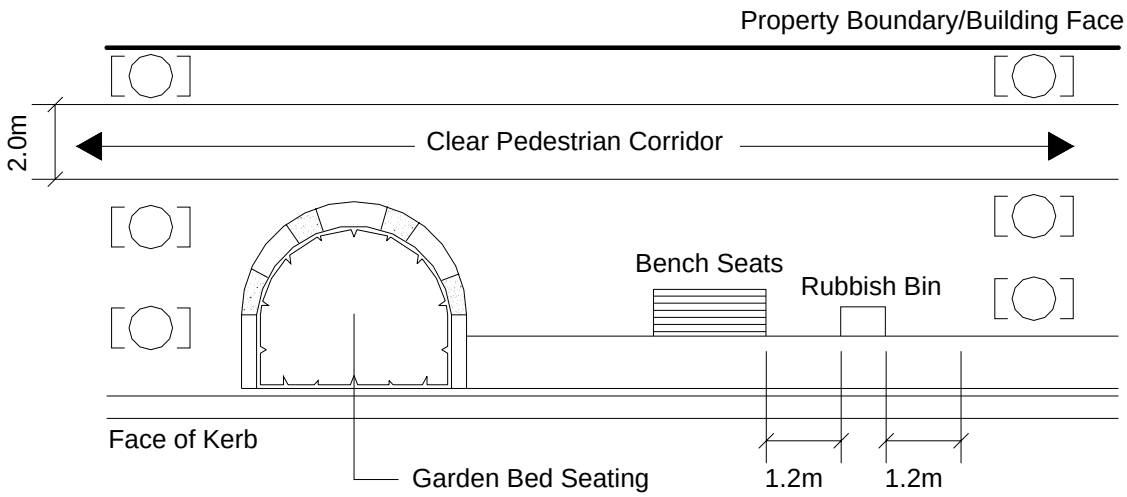

Diagram 4 - Setbacks from carparking

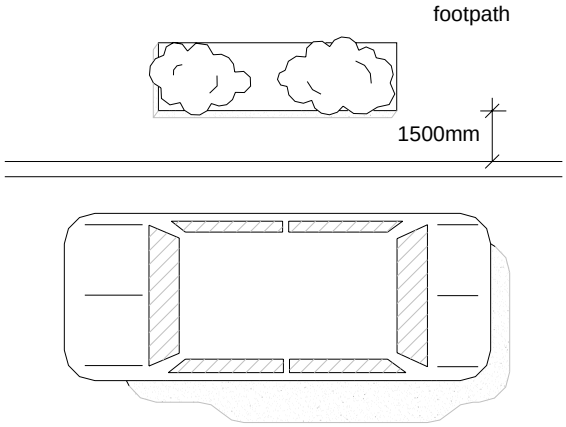

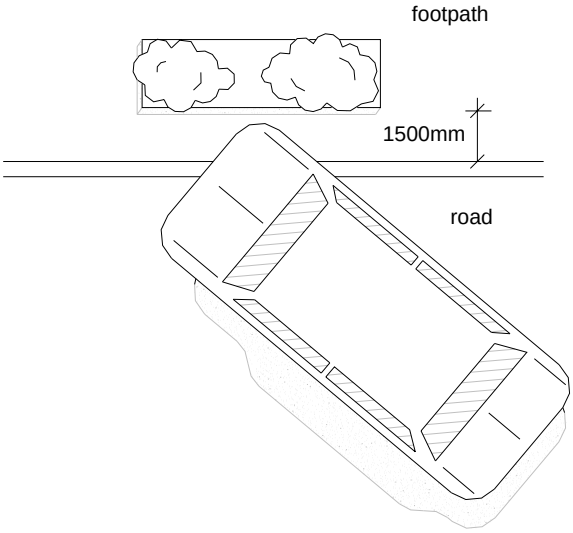

Photograph 1 - Location of roadside protective measures

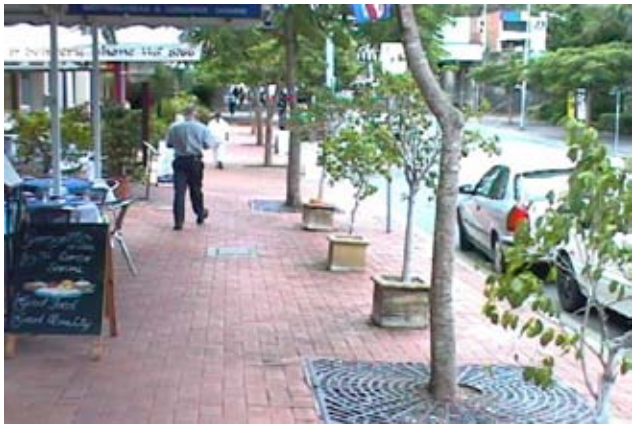

Photograph 2 - Suitable vertical clearance

Photograph 3 - Suitable pedestrian corridor

Photograph 4 - Obstructed pedestrian corridor

Photograph 5 - Insufficient separation to kerb

Photograph 6 - Tactile paving free of obstructions

Photograph 7 - Outdoor dining making a positive contribution to the streetscape

this page purposely
left blank

Division 20 - Park

6.20.1 Introduction

(1) This division contains the provisions for the Park Code, that incorporates -

(a) Compliance with the Park Code (section 6.20.2);

(b) Overall Outcomes of the Park Code (section 6.20.3);

(c) Acceptable Solutions for Self-Assessable Development (section 6.20.4);

(d) Specific Outcomes and Probable Solutions applicable to Assessable Development (section 6.20.5).

6.20.2 Compliance with the Park Code

(1) Development that is consistent with the following complies with the Park Code -

(a) acceptable solutions in section 6.20.4 where self-assessable development; or

(b) specific outcomes in section 6.20.5 where assessable development.

Note -

Although not considered as part of the development application, a park will need to comply with -
- *Local Law No.15 - Parks and Reserves*;
- *Subordinate Local Law No.15 - Parks and Reserves*.

6.20.3 Overall Outcomes of the Park Code

(1) The overall outcomes are the purpose of the Park Code.

(2) The overall outcome sought for the Park Code is the following -

(a) to ensure the use -

(i) provides safe and comfortable places that are designed in accordance with the principles of Crime Prevention Through Environmental Design (CPTED);

(ii) provides places for community interaction, and passive and active recreation;

(iii) provides equitable access and movement networks for pedestrians and cyclists;

(iv) promotes environmental sustainability through the retention of native plants and the creation and enhancement of habitat corridors;

(v) provides opportunities for infrequent private sporting/recreational activities;

(vi) provides park equipment and furniture that enhances amenity and usability.

6.20.4 Acceptable Solutions applicable to Self-Assessable Development

Self-Assessable	
Acceptable Solutions	
A1.	(1) The use is on land in the ownership or control of the local government; (2) Buildings or structures are limited to - (a) shelters with a maximum covered area of 50m^2 and a maximum height of 5 metres; (b) picnicking facilities such as tables and chairs, barbecues and other similar items; (c) landscape and horticultural structures such as arbors; (d) playscapes for all age groups; (e) shade structures; (f) noticeboards or display facilities; (g) public toilets; (h) informal sport facilities such as cricket pitches and nets, basketball and baseball courts or half courts and the like.

6.20.5 Specific Outcomes and Probable Solutions applicable to Assessable Development

Assessable Development			
Specific Outcomes		**Probable Solutions**	
S1.	(1) The use provides - (a) opportunities for community interaction and enjoyment; (b) safe and comfortable places; (c) opportunities for passive and active recreation; (d) movement networks for pedestrians and cyclists.	**P1.**	(1) No probable solution identified.
S2.	(1) Site layout - (a) incorporates existing landscape and topographic features; (b) retains and integrates native plants; (c) supports the retention and enhancement of habitats and corridors; (d) ensure that fencing, lighting and noise do not impede the movement of native animals; (e) assists with the identification of entry points and paths; (f) allows adequate visibility of public and semi-public spaces to encourage casual surveillance. **Note -** Where any development activity, such as building and excavation or fill, is required within the drip line of existing native trees, construction details are to be specified by a qualified Arborist.	**P2.**	(1) No probable solution identified.

Assessable Development			
Specific Outcomes		**Probable Solutions**	
S3.	(1) Activities proposed within the park, specifically where in Conservation Zone - sub-area CN2 - Nature Based Recreation - (a) minimise disturbance to environmental values; (b) are low-scale and complement the nature based setting; (c) do not require major infrastructure provision.	**P3.**	(1) No probable solution identified.
S4.1	(1) The use maximises public access by - (a) ensuring access is available at all times except where - (i) an organised activity such as a sporting event or carnival requires temporary exclusive use; (ii) access is restricted to protect the environmental values of the park, such as for the duration of a breeding or nesting season or to allow regeneration or revegetation; (iii) utility infrastructure requires restricted access, such as for safety in the case of drainage works, or security in the case of buildings within the park; (b) ensuring internal accessways, pedestrian paths, and buildings address the mobility requirements of all people particularly those requiring disabled access.	**P4.1**	(1) The use provides public access that - (a) is provided at no cost; (b) is in accordance with *Australian Standard 1428: 2001- Design for Access and Mobility.*
S4.2	(1) Access, parking and on-site vehicle movement areas - (a) are appropriate to the park type and intended use; (b) do not undermine the informal and formal recreational, environmental, landscape and cultural values of the park.	**P4.2**	(1) No probable solution identified.
S4.3	On-site car parking caters for visitors and is commensurate with the activities incorporated within the park.	**P4.3**	Car parking provision complies with Part 9 - Schedule 1 - Access and Parking - Table 1 - Minimum On-Site Vehicle Requirements.
S5.1	(1) Landscaping ensures plant species used are native to the area.	**P5.1**	(1) Landscaping - (a) uses species - (i) in the park - are selected from the native plants listed in Part 9 - Schedule 10 - Vegetation Species

Assessable Development			
Specific Outcomes		**Probable Solutions**	
			List; (ii) in the road reserve - are selected form Part 9 - Schedule 9 - Street Trees; (b) removes plants identified in Table 1 and 2 of Part 9 - Schedule 12 - Weed Species List; (c) locates trees with sufficient area to provide a canopy drip line clear of all buildings and structures, such as public toilets and shelters.
S5.2	(1) Landscape planting, lighting, seating, paths and the like assist in providing a safe environment for the user.	**P5.2**	(1) Landscaping - (a) maximises visibility by the use of tree species that have a single trunk clear of foliage for 1.8 metres above ground level near pedestrian paths, entries, parking areas, street corners, street lighting and driveways; (b) where adjoining pedestrian paths, limiting shrubs and garden beds to a maximum height of 800mm; (c) provides lighting at site entries, car parking areas, building entries and pedestrian paths and accessways; (d) ensures a minimum of 75 percent of the perimeter of the lot or premises is road frontage.
S5.3	(1) Planted buffers to boundaries protect adjoining environmental values.	**P5.3**	(1) Planted landscape buffers - (a) a minimum width of 10 metres are provided along external boundaries where adjoining bushland areas or any land with environmental value; (b) ensures planting density prevents weed invasion to adjoining land.
S5.4	(1) Landscaping is used to enhance visual amenity by screening walls, fences, service and car parking areas. **Note -** Site layout should effectively screen service areas rather than reliance on hard landscape elements such as fences.	**P5.4**	(1) Planted landscaping consisting of a combination of trees, shrubs and ground cover is provided along - (a) retaining walls; (b) unarticulated walls or fences greater than 10 metres long; (c) service areas; (d) car parking areas.

Assessable Development			
Specific Outcomes		**Probable Solutions**	
S6.	(1) Park equipment and furniture are provided to - (a) satisfy the function requirements of the local, district or regional park; (b) cater for the needs of visitors and the local community; (c) enhance amenity and usability; (d) provide opportunities for community interaction; (e) provide opportunities for passive and active recreation.	**P6.**	(1) No probable solution identified. **Note -** To assist in achieving the specific outcomes refer to Planning Scheme Policy 9 - Infrastructure Works.
S7.	(1) The use achieves efficient maintenance and drainage through - (a) ensuring paving, turf and mulched garden beds are drained; (b) providing park equipment and landscaping that does not restrict the flow of water to natural drainage lines; (c) enhancing stormwater infiltration by - (i) draining hard surfaced areas towards permeable surfaces; (ii) providing turf and garden beds; (iii) maximising the extent of permeable surfaces; (d) using turf species that are shade and or sun tolerant; (e) ensuring turfed areas do not exceed a gradient of 1 in 4; (f) designing turfed areas to be accessible by lawn maintenance equipment; (g) where there is limited on-site maintenance, provide hardy plant species that - (i) achieve a long life expectancy; (ii) result in minimal litter drop; (iii) require minimal pruning, watering and fertilizing. **Note -** This may be achieved through the provision and/or treatment of swales, spoon drains, field gullies, subsurface drainage and stormwater connections.	**P7.**	(1) No probable solution identified.

this page purposely
left blank

Division 21 - Relatives Apartment

6.21.1 Introduction

(1) This division contains the provisions for the Relatives Apartment Code, that incorporates -

(a) Compliance with the Relatives Apartment Code (section 6.21.2);

(b) Overall Outcome of the Relatives Apartment Code (section 6.21.3);

(c) Acceptable Solutions applicable to Self-Assessable Development (section 6.21.4);

(d) Specific Outcomes and Probable Solutions applicable to Assessable Development (section 6.21.5).

6.21.2 Compliance with the Relatives Apartment Code

(1) Development that is consistent with the following complies with the Relatives Apartment Code -

(a) acceptable solutions in section 6.21.4 where self-assessable development; or

(b) specific outcomes in section 6.21.5 where assessable development.

6.21.3 Overall Outcomes of the Relatives Apartment Code

(1) The overall outcomes are the purpose of the Relatives Apartment Code.

(2) The overall outcome sought for the Relatives Apartment Code is the following -

(a) to ensure the use -

(i) provides accommodation in association with a dwelling house, suitable for occupation by an immediate relative to the occupant(s) of the dwelling house;

(ii) assists in meeting an increasing social responsibility of providing alternative accommodation for the aged;

(iii) maintains a high standard of residential amenity;

(iv) complements the character of the surrounding area.

6.21.4 Acceptable Solutions applicable to Self-Assessable Development

Self-Assessable Development	
Acceptable Solutions	
A1.	(1) The use is attached to an existing dwelling house; **Note -** For the purposes of this code, the term 'attached' does not mean by a covered breezeway or like structure. (2) A maximum of one relatives apartment is established on the lot or premises; (3) Building height is less than 4.5 metres above ground level; (4) The use is sited in accordance with the following - (a) front setback - behind front building line; (b) side setback - 1.5 metres; (c) rear setback - 4 metres; (5) Maximum gross floor area does not exceed $50m^2$; (6) A maximum of two habitable rooms are provided; (7) The facilities shared with the principal dwelling house include - (a) a laundry; (b) mailbox and postal address; (c) car accommodation; (d) driveway and vehicle crossover; (e) pedestrian access from the road verge; (8) The use has direct internal access to the dwelling house and is not separated by a garage, storeroom or similar room; (9) Privacy between dwelling units on adjoining sites is achieved by - (a) where it is proposed that habitable room windows will be directly adjacent to habitable rooms of the adjoining dwelling unit within a distance of 6 metres and within an angle of 45 degrees, privacy is protected by - (i) sill heights being a minimum of 1.5 metres above floor level; or (ii) providing fixed translucent, such as frosted or textured glazing, for any part of the window below 1.5 metres above floor level; or (iii) providing fixed external screens that are - a. solid translucent screens; or b. perforated panels or trellises that have a maximum of 25 percent openings, with a maximum opening dimension of 50mm and that are permanently fixed and durable; c. are offset a minimum of 300mm from the wall of the building; (b) outlook from windows, balconies, stairs, landings, terraces and decks and other private areas, is obscured or screened where a direct view is available into private open space of another dwelling unit by - (i) screening devices as detailed above; or (ii) incorporate existing or new planted landscape that will achieve 2 metres in height at maturity; (10) The use is connected to infrastructure including reticulated water and sewerage, energy and telecommunications.

6.21.5 Specific Outcomes and Probable Solutions applicable to Assessable Developm ent

Assessable Development			
	Specific Outcomes		**Probable Solutions**
S1.	Location - The use is attached or detached to an existing or approved dwelling house.	**P1.**	No probable solution identified. **Note -** Refer to the relevant zone code to establish if the use is consistent with that zone.
S2.	Site Size and Density - The use is of a density that is consistent with the amenity of the locality and the use.	**P2.**	No more than one relatives Apartment is established on the lot or premises.
S3.	Site Layout and Building Design - (1) The siting and design of the use protects residential amenity and maintains the existing residential character of the premises and adjoining properties.	**P3.**	(1) The use complies with the following requirements - (a) building height does not exceed 4.5 metres; (b) site coverage - the total site coverage of the dwelling house and relatives Apartment does not exceed the percentage specified in the zone code; (c) gross floor area is a maximum of 70m^2 or 50 percent of the dwelling house, whichever is the lesser; (d) setbacks - (i) front - behind the front building line; (ii) side - 1.5 metres; (iii) rear - 4 metres; (iv) within 10 metres of the dwelling house; or (v) within a development envelope area; (e) a maximum of two habitable rooms are provided; (f) the facilities shared with the principal dwelling house include - (i) a laundry; (ii) mailbox and postal address; (iii) car accommodation; (iv) driveway and vehicle crossover; (v) pedestrian access from the road verge.

Assessable Development			
Specific Outcomes		**Probable Solutions**	
	Visual Privacy -		
S4.	Privacy between dwelling units on adjoining sites is achieved by effective building design and the location of windows and open space areas to prevent overlooking into habitable rooms or private open space areas. **Note -** The effective location of windows and balconies to avoid overlooking is preferred to the use of screening devices. Where these are used, they should be integrated with the building design and have minimal negative affect on the resident's or neighbour's amenity.	**P4.**	(1) The use complies with the following - (a) where habitable room windows will be directly adjacent to habitable rooms of the neighbouring dwelling unit within a distance of 6 metres and within an angle of 45 degrees, privacy is protected by - (i) sill heights being a minimum of 1.5 metres above floor level; or (ii) providing fixed translucent, such as frosted or textured glazing, for any part of the window below 1.5 metres above floor level; or (iii) providing fixed external screens; (b) where incorporating screening devices they are - (i) solid translucent screens; or (ii) perforated panels or trellises that have a maximum of 25 percent openings, with a maximum opening dimension of 50mm, and that are permanently fixed and durable; (iii) are offset a minimum of 300mm from the wall of the building; (c) outlook from windows, balconies, stairs, landings, terraces and decks and other private areas, is obscured or screened where a direct view is available into the private open space of another dwelling unit by - (i) screening devices as detailed above; or (ii) incorporate existing or new planted landscaping that will achieve 2 meters in height at maturity.

Division 22 - Roadside Stall

6.22.1 Introduction

(1) This division contains the provisions for the Roadside Stall Code, that incorporates -

(a) Compliance with the Roadside Stall Code (section 6.22.2);

(b) Overall Outcomes of the Roadside Stall Code (section 6.22.3);

(c) Specific Outcomes and Probable Solutions applicable to Assessable Development (section 6.22.4).

6.22.2 Compliance with the Roadside Stall Code

(1) Development that is consistent with the specific outcomes in section 6.22.4 complies with the Roadside Stall Code.

6.22.3 Overall Outcome of the Roadside Stall Code

(1) The overall outcomes are the purpose of the Roadside Stall Code.

(2) The overall outcome sought for the Roadside Stall Code is the following -

(a) to ensure the use -

(i) contributes to the character of non-urban areas;

(ii) enables primary producers to undertake direct sales of produce to the consumer.

6.22.4 Specific Outcomes and Probable Solutions applicable to Assessable Development

Assessable Development			
Specific Outcomes		**Probable Solutions**	
S1.	Location and Design - (1) The roadside stall is associated with an agricultural use; (2) The scale, intensity and operating characteristics of the use do not impact on the amenity and character of surrounding area.	**P1.**	(1) There is only one roadside stall per premises; (2) The roadside stall - (a) is wholly contained within the property boundary; (b) is used for the purpose of display and retail sale of agricultural produce to the public; (c) does not exceed 40m^2 in gross floor area; (d) has a maximum of 1 sign that - (i) does not exceed 1m² in area; (ii) is less than 2 metres in height from ground level; (e) operates between the hours of 7am to 6pm weekdays and 8am to 5pm on weekends. **Note -** Refer to Part 7 - Division 1 - Advertising Devices Code for additional requirements.
S2.	Access and Parking - (1) On-site car parking is provided that - (a) allows customers to park safely; (b) maintains clear sight lines; (c) caters for operator and customer vehicle parking; (d) permits vehicles to exit the site in a forward gear; (e) is sealed to minimise dust impacts on adjoining premises.	**P2.**	(1) No probable solution identified.
S3.	Waste Management - (1) Waste management areas are - (a) screened from view of any street frontage; (b) located to minimise adverse impacts associated with noise and odour.	**P3.**	(1) No probable solution identified.

Division 23 - Rural Enterprise

6.23.1 Introduction

(1) This division contains the provisions for the Rural Enterprise Code, that incorporates -

(a) Compliance with the Rural Enterprise Code (section 6.23.2);

(b) Overall Outcomes of the Rural Enterprise Code (section 6.23.3);

(c) Specific Outcomes and Probable Solutions applicable to Assessable Development (section 6.23.4).

6.23.2 Compliance with the Rural Enterprise Code

(1) Development that is consistent with the specific outcomes in section 6.23.4 complies with the Rural Enterprise Code.

6.23.3 Overall Outcomes of the Rural Enterprise Code

(1) The overall outcomes are the purpose of the Rural Enterprise Code.

(2) The overall outcome sought for the Rural Enterprise Code is the following -

(a) to ensure the use -

(i) is located to be consistent with the character of the surrounding area;

(ii) is of a design, scale and operation that does not adversely impact on the amenity of the surrounding area.

6.23.4 Specific Outcomes and Probable Solutions applicable to Assessable Development

Assessable Development			
Specific Outcomes		**Probable Solutions**	
S1.	Location - The location of the use is consistent with the character of the surrounding area.	**P1.**	No probable solution identified. **Note -** Refer to the relevant zone code to establish if the use is consistent with that zone.
S2.	Amenity - (1) The use maintains the amenity of the surrounding area by - (a) ensuring operation of the use is low key and non-intrusive to adjoining premises; (b) incorporating a design and scale of buildings and external areas that complements environmental values and the landscape setting; (c) locating and screening parking, external work areas and open storage areas away from adjoining premises and road frontages.	**P2.**	(1) Amenity is preserved by ensuring - (a) no more than 10 persons are employed at the premises; (b) the gross floor area of the use does not exceed 400m^2; (c) external work areas do not exceed 200m^2; (d) access roads and parking areas within the premises are sealed; (e) equipment associated with the use is stored in a building or structure; (f) all parking, external work areas and open storage areas are - (i) setback a minimum of 20 metres from property boundaries; or (ii) 10 metres where screened by a 2 metre planted buffer; (g) signage associated with the use is - (i) not greater than 1m^2; (ii) less than 2 metres in height from ground level; (iii) not illuminated; (iv) entirely within the premises or on the property front boundary. **Note -** Refer to Part 7 - Division 1 - Advertising Devices Code for additional requirements.

Division 24 - Service Station

6.24.1 Introduction

(1) This division contains the provisions for the Service Station Code, that incorporates -

(a) Compliance with the Service Station Code (section 6.24.2);

(b) Overall Outcomes of the Service Station Code (section 6.24.3);

(c) Specific Outcomes and Probable Solutions applicable to Assessable Development (section 6.24.4).

6.24.2 Compliance with the Service Station Code

(1) Development that is consistent with the specific outcomes in section 6.24.4 complies with the Service Station Code.

Note -

Planning Scheme Policy 5 - Environmental Emissions will assist in achieving specific outcomes within the Service Station Code.

6.24.3 Overall Outcomes of the Service Station Code

(1) The overall outcomes are the purpose of the Service Station Code.

(2) The overall outcome sought for the Service Station Code is the following -

(a) to ensure the use -

(i) complements the character of the locality, and is compatible with adjoining uses and the physical characteristics of the site where it is located;

(ii) is sited and designed to maintain public safety and provide service beyond a localised catchment;

(iii) achieves a high standard of vehicular accessibility and minimises impacts on surrounding traffic networks;

(iv) prevents adverse environmental impacts resulting from activities on the premises.

6.24.4 Specific Outcomes and Probable Solutions applicable to Assessable Development

Assessable Development			
Specific Outcomes		**Probable Solutions**	
	Location -		
S1.	(1) The use is located to - (a) prevent commercial and industrial ribbon development; (b) complement established centres and non-residential uses in urban areas.	**P1.**	(1) No probable solution identified. **Note -** Refer to the relevant zone code to establish if the use is consistent with that zone.
	Site Layout and Building Design -		
S2.1	(1) Buildings and structures are compatible with the scale and character of adjoining and nearby uses.	**P2.1**	(1) The use - (a) is not located within 50 metres of a sensitive receiving environment; (b) overall building height is less than 8.5 metres above ground level; (c) buildings are located a minimum of 10 metres behind the front boundary; (d) structures including the petrol pump canopy are located a minimum of 4 metres from the front boundary. **Note -** Refer to Diagram 1 - Setbacks for service stations.
S2.2	(1) Lighting is located and designed to prevent adverse impacts on adjoining or nearby properties.	**P2.2**	(1) All lighting is shielded in accordance with - (a) *Australian Standard 4282.3:1997 - Control of the Obtrusive Effects of Outdoor Lighting - Design, Installation, Operation and Maintenance;* (b) *Australian Standard 4282 Appendix A:1997 - Control of the Obtrusive Effects of Outdoor Lighting - General Principles for Control of the Obtrusive Effects of Outdoor Lighting.*
S2.3	Signage location and design is integrated into the site layout and landscaped areas of the site.	**P2.3**	No probable solution identified. **Note -** Refer to Part 7 - Division 1 - Advertising Devices Code for additional requirements.

Assessable Development			
Specific Outcomes		**Probable Solutions**	
S2.4	Fuel storage tank fill points are located to maintain safe access and manoeuvrability on the site at all times.	**P2.4**	Fuel storage tank fill point locations allow tankers to stand wholly on site when unloading fuel.
S2.5	(1) Retail services for general convenience items - (a) do not compromise the role and function of the shies network of centres; (b) are ancillary to the core activity to the service station use.	**P2.5**	(1) Gross floor area of the retail component of the use does not exceed 150m^2.
S3.	Landscape - (1) The use is landscaped to - (a) screen and provide visual relief from buildings and structures; (b) present an attractive appearance to the streetscape; (c) minimise visual and noise impacts on adjoining and nearby premises.	**P3.**	(1) Landscaping - (a) incorporates a minimum 3 metre wide planted landscaped area along all property boundaries, excluding entrance and exit access points of the site; (b) where having a common boundary with a sensitive receiving environment, incorporates a densely planted 3 metre wide landscape buffer, in combination with a 2 metre high solid fence. **Note -** Refer to - ■ Diagram 1 - Setbacks for service stations; ■ Part 8 - Division 8 - Landscape Code for additional requirements.
S4.	Safety - (1) Design and site layout of the use ensures the safety of people and property.	**P4.**	(1) Design and site layout - (a) complies with *Australian Standard AS1940:1993 - Storage and Handling of Flammable and Combustible Liquids*; (b) complies with *Australian Standard AS1596:2002 - Storage and Handling of LP Gas*, where Liquefied Petroleum (LP) gas for automotive or other purposes is sold.

Assessable Development			
Specific Outcomes		**Probable Solutions**	
	Environmental Impacts -		
S5.1	(1) Noise, air and vibration emissions generated by the use from air pumps, water supply or automatic car wash facilities are mitigated by - (a) providing measures to minimise air and vibration emissions; (b) providing noise attenuation measures that are designed and located to minimise nuisance to sensitive receiving environments; (c) locating car wash facilities to avoid spray drift onto adjoining properties.	**P5.1**	(1) For the use - (a) no probable solution identified; (b) all plant and machinery is located, enclosed or otherwise attenuated to - (i) ensure noise measured as the $L_{Amax,adj,T}$ parameter at the boundary of the lot or premises, does not exceed - a. 5 dB(A) above background noise levels between 7am - 10pm; b. 3 dB(A) above background noise levels between 10pm - 7am; (ii) comply with any approval issued under the *Environmental Protection Act 1994*; (c) the setback for car wash facilities is a minimum of 5 metres from any property boundary. **Note -** The $L_{Amax,adj,T}$ parameter is defined in the *Noise Measurement Manual* (Environmental Protection Agency 2000).
S5.2	(1) Delivery and service areas, waste storage and collection areas, air conditioners, refrigeration units and exhaust systems are - (a) located to minimise impacts on sensitive receiving environments; (b) provided with adequate visual screening and noise attenuation. (c) designed to incorporate adequate waste collection manoeuvring and service areas.	**P5.2**	(1) An on-site waste collection system has - (a) sufficient waste collection vehicle manoeuvring are to enter and exit the site in a forward gear; (b) centralised bulk bin container storage area.
S5.3	(1) On-site drainage is designed and maintained to preserve stormwater quality and prevent pollution of ground or surface waters.	**P5.3**	(1) No probable solution identified. **Note -** For further information refer to - ■ Planning Scheme Policy 5 - Environmental Emissions; ■ Part 8 - Division 9 - Stormwater Management Code.

Diagram 1 -Setbacks for service stations

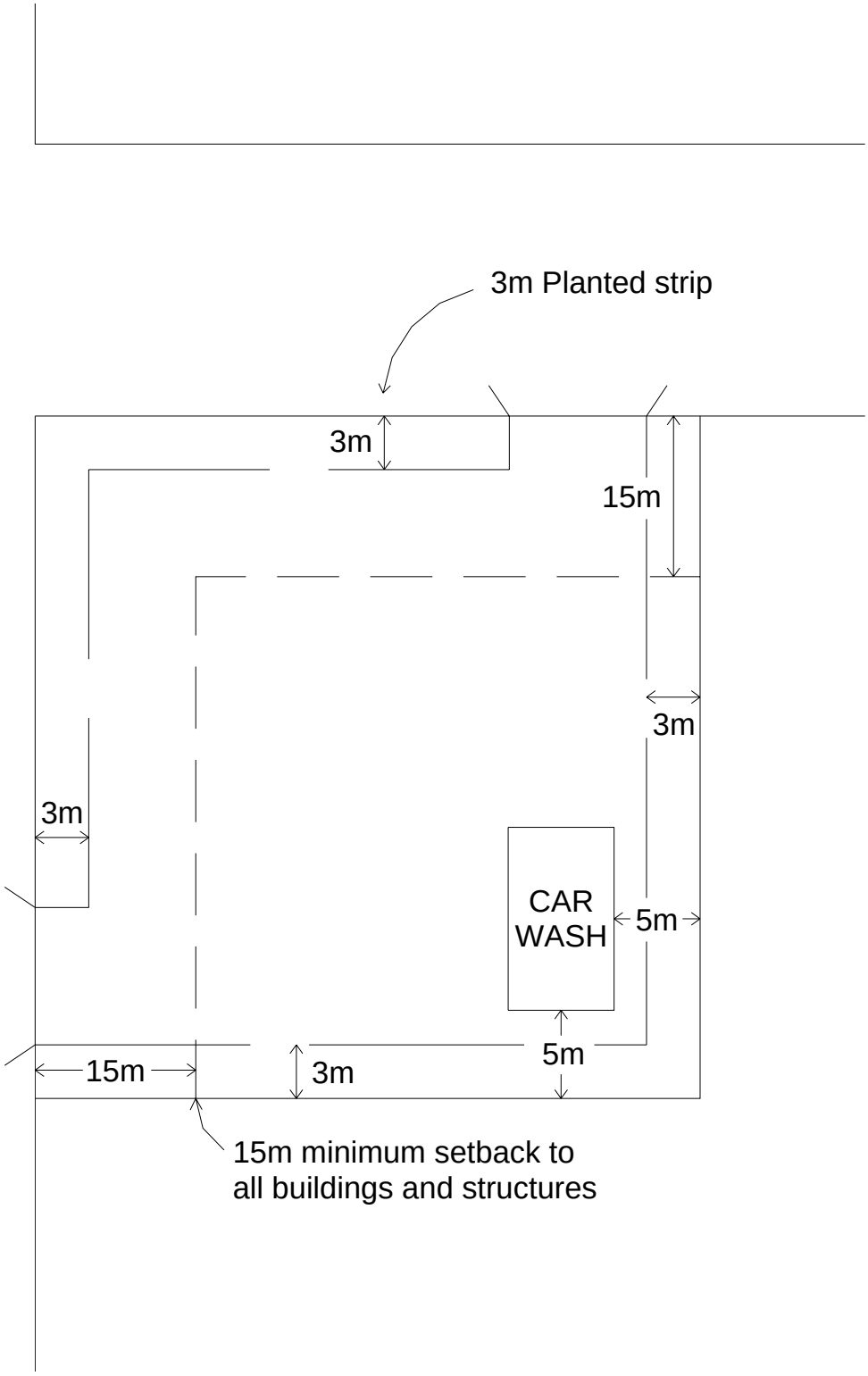

Service Station

this page purposely
left blank

Division 25 - Small Lot House

6.25.1 Introduction

(1) This division contains the provisions for Small Lot House Code, that incorporates -

(a) Compliance with the Small Lot House Code (section 6.25.2);

(b) Overall Outcome of the Small Lot House Code (section 6.25.3);

(c) Acceptable Solutions applicable to Self-Assessable Development (section 6.25.4);

(d) Specific Outcomes and Probable Solutions applicable to Assessable Development (section 6.25.5).

6.25.2 Compliance with the Small Lot House Code

(1) Development that is consistent with the following complies with the Small Lot House Code -

(a) acceptable solutions in section 6.25.4 where self-assessable development; or

(b) specific outcomes in section 6.25.5 where assessable development.

Note -

Planning Scheme Policy 8 - Housing will assist in achieving specific outcomes within the Small Lot House Code.

6.25.3 Overall Outcomes of the Small Lot House Code

(1) The overall outcomes are the purpose of the Small Lot House Code.

(2) The overall outcome sought for the Small Lot House Code is the following -

(a) to ensure the use -

(i) provides a greater range of housing types to the community;

(ii) is designed and sited to provide for a high quality living environment;

(iii) maintains a high standard of residential amenity;

(iv) complements the character of the surrounding area.

6.25.4 Acceptable Solutions applicable to Self-Assessable Development

Self-Assessable Development	
Acceptable Solutions	
A1.	(1) The use is located on a lot that - (a) is greater than 400m^2 and less than 500m^2; (b) has a frontage greater than 14 metres; (2) Building height, site coverage, setbacks and building length criteria complies with Table 1 - Building Siting and Design Requirements, excluding built to boundary criteria; (3) The use does not include any built to boundary walls; (4) In sub-area UR2 - (a) external masonry building walls do not extend more than 4.5 metres above ground level; (b) includes the use of sheet materials, such as timber, metal or fibre cement for external cladding; (c) roofing material is sheet metal, such as corrugated iron; (5) Where it is proposed that habitable room windows will be within 6 metres and within an angle of 45 degrees, and directly adjacent to habitable rooms of the neighbouring dwelling unit, privacy between dwelling units is protected by - (a) sill heights being a minimum of 1.5 metres above floor level; or (b) providing fixed translucent, such as frosted or textured glazing, for any part of the window below 1.5 metres above floor level; or (c) providing fixed external screens that are - (i) solid translucent screens; or (ii) perforated panels or trellises that have a maximum of 25 percent openings, with a maximum opening dimension of 50mm and that are permanently fixed and durable; (iii) are offset a minimum of 300mm from the wall of the building; **Note -** The effective location of windows and balconies to avoid overlooking is preferred to the use of screening devices. Where these are used, they should be integrated with the building design and have minimal negative affect on the resident's or neighbour's amenity. (6) Car parking for the use complies with the criteria detailed in Part 9 - Schedule 1 - Access and Parking, Table 1 - Minimum On-Site Vehicle Parking Requirements; (7) The maximum slope of the driveway does not exceed 1 in 4; **Note -** A maximum slope for a driveway of 1 in 6 is the local government's desired standard. (8) Carports and garages - (a) are located a minimum of 6 metres behind the front property boundary (b) where the building is 2 storey, is recessed beneath the upper storey by at least 1.2 metres; (9) In the Urban Residential and Medium Density Residential Zone, where the small lot house incorporates a garage that is classified as part of the class 1a building and faces the street, the garage opening does not exceed 6 metres or 50 percent of the building frontage, whichever is the lesser; (10) Open space consists of -

Self-Assessable Development	
Acceptable Solutions	
	(a) a minimum of 25m^2 at ground level that has a minimum dimension of 4 metres and is directly accessible from the main living area; (b) where additional private open space is provided above ground, it has a minimum of 10m^2 with a minimum dimension of 2.5 metres; (c) the finished level of the private open space area is not steeper than 1 in 14; (d) the private open space area - (i) receives at least 3 hours of sunlight between 9am and 3pm on June 21 over 100 percent of the area; (ii) is orientated within 20 degrees of north; (11) Service facilities include - (a) an open air clothes drying facility that is a minimum of 10m^2 and located in a sunny, ventilated and convenient site that is screened from view from the street; (b) a waste and recycling bin storage area that is sited greater than 6 metres from the road frontage and capable of accommodating two waste bins; (c) storage space that - (i) is a minimum of 3m^2; (ii) is accessible from external areas; (iii) is lockable; (iv) has a minimum internal height of 2.1 metres; (v) is screened from public view; **Note -** ■ This space may form part of a carport or garage. ■ Storage areas are exclusive of private open space areas. (12) Fencing - (a) forward of the building frontage are not more than - (i) 1.2 metres in height above ground level where of solid construction; or (ii) 1.8 metres in height above ground level where the fence is at least 30 percent transparent - refer to Diagram 2; (b) on side and rear boundaries that adjoin open space / parkland are a maximum of 1.2 metres in height; (c) does not block or interrupt overland flow paths; (13) Exterior shading devices are used to protect habitable rooms from summer sun such as overhanging balconies, wide eaves, verandahs, pergolas and window shutters.

6.25.5 Specific Outcomes and Probable Solutions applicable to Assessable Development

Assessable Development			
Specific Outcomes		**Probable Solutions**	
S1.	Location - (1) The use is located - (a) on land intended for residential purposes; (b) in an area with convenient access to a centre, community services and facilities; (c) within close proximity to public transport.	**P1.**	(1) No probable solution identified. **Note -** Refer to the relevant zone code to establish if the use is consistent with that zone.
S2.	Site Size and Density - The use is on a lot that is consistent with the amenity of the locality and is sufficient in size to provide for the needs of this housing type.	**P2.**	The use complies with the lot size and frontage criteria for the use as detailed in Part 9 - Schedule 5 - Lot Sizes, Table 1 - Use Lot Size.
S3.	Site Layout and Building Design - (1) Layout and design enhances built form of the surrounding streetscape by - (a) contributing to the establishment of an attractive streetscape in new areas; (b) ensuring the use addresses the street frontage; (c) reducing building bulk through a combination of verandahs, recesses and variations in building form and materials; (d) ensuring building height is consistent with the predominant height and scale of surrounding properties; (e) ensuring setbacks complement the existing streetscape and maximise private open space areas, solar access and provide for service areas; (f) building to the boundary facilitates - (i) improved solar access for the dwelling unit and adjoining dwelling unit through increased setbacks on northern boundary; (ii) appropriate length, height and articulation of built to boundary walls.	**P3.**	(1) The use complies with the following requirements - (a) building height, site coverage, setbacks, built to boundary and building length criteria - detailed in Table 1 - Building Siting and Design Requirements; (b) solar access to habitable rooms and private open space of adjoining dwelling units - (i) is not reduced to less than 3 hours between 9am and 3pm on June 21; or (ii) where existing overshadowing by building and fences is greater than this, sunlight is not reduced by a further 20 percent. **Note -** To assist in achieving the specific outcome refer to Site Development Plan, Site Analysis Plan and Streetscape Analysis in Planning Scheme Policy 8 - Housing.

Assessable Development			
Specific Outcomes		**Probable Solutions**	
S4.	Visual Privacy - (1) Privacy between dwelling units on adjoining sites is achieved by effective building design and the location of windows and open space areas to prevent overlooking into habitable rooms or private open space areas. **Note -** The effective location of windows and balconies to avoid overlooking is preferred to the use of screening devices. Where these are used, they should be integrated with the building design and have minimal negative affect on the resident's or neighbour's amenity.	**P4.**	(1) Where it is proposed that habitable room windows will be within a distance of 6 metres and within an angle of 45 degrees, and directly adjacent to habitable rooms of the neighbouring dwelling unit, privacy is protected by - (a) sill heights being a minimum of 1.5 metres above floor level; or (b) providing fixed translucent, such as frosted or textured glazing, for any part of the window below 1.5 metres above floor level; or (c) providing fixed external screens that are, refer to Diagram 1 - (i) solid translucent screens; or (ii) perforated panels or trellises that have a maximum of 25 percent openings, with a maximum opening dimension of 50mm, and that are permanently fixed and durable; (iii) are offset a minimum of 300mm from the wall of the building.
S5.	Acoustic Amenity - Siting and design of the use achieves a high level of amenity for occupants by minimising impacts from noise generating areas, such as streets, driveways and private open space areas.	**P5.**	No probable solution identified.
S6.	Access and Parking – (1) Vehicle parking and access - (a) is safe and convenient for residents and visitors; (b) has an appropriate number of car parking spaces to cater for residents and visitors; (c) does not dominate the streetscape or building form when viewed from the street; (d) is compatible with the overall building design in terms of height, roof form, detail, materials and colour.	**P6.**	(1) The use - (a) complies with the criteria detailed Part 9 - Schedule 1 - Access and Parking, Table 1 - Minimum On-site Vehicle Parking Requirements; (b) locates carports and garages a minimum of 6 metres behind the front property boundary - refer to Diagram 4; (c) where the building is 2 storey, recesses carports and garages beneath the upper storey by at least 1.2 metres; (d) where in the Urban Residential or Medium Density Residential

Assessable Development			
Specific Outcomes		**Probable Solutions**	
			Zone and includes a garage that faces the street, and is classified as part of the class 1a building, has an opening that does not exceed 6 metres or 50 percent of the building frontage, whichever is the lesser - refer to Diagram 5; (e) has a maximum driveway slope of 1 in 4. **Note -** The maximum slope for a driveway of 1 in 6 is the local government's desired standard.
S7.	Landscaping - (1) Landscape design contribute to a pleasant, safe and attractive living environment by - (a) retaining existing mature trees; (b) using species that are native to the area; (c) ensuring privacy, surveillance and amenity; (d) enhancing climatic conditions; (e) not blocking or interrupting overland flows; (f) providing planted landscape that acts as a visual relief from the built form within the front setback; (2) Fencing is compatible with - (a) materials used within the dwelling; (b) the streetscape; (c) the scale of the lot frontage and building.	**P7.**	(1) No probable solution identified; (2) Fencing - (a) forward of the building frontage are not more than - (i) 1.2 metres in height above ground level where of solid construction; or (ii) 1.8 metres in height above ground level where the fence is at least 30 percent transparent - refer to Diagram 2; (b) on side and rear boundaries that adjoin open space / parkland are a maximum of 1.2 metres in height; (c) do not block or interrupt overland flow paths.
S8.	Open Space Design - (1) Open space - (a) includes a clearly designated private open space area that provides privacy for residents; (b) is of a useable size and dimension; (c) is of a suitable slope; (d) is directly accessible from the main living area; (e) is capable of receiving sufficient sunlight; (f) is located behind the building frontage; (g) where above ground, protects the privacy of adjoining and nearby properties - refer to	**P8.**	(1) Open space consists of - (a) a minimum of $25m^2$ at ground level that has a minimum dimension of 4 metres and is directly accessible from the main living area; (b) where additional private open space is provided above ground, it has a minimum of $10m^2$ with a minimum dimension of 2.5 metres; (c) the finished level of the private open space area is not steeper than 1 in 14; (d) the private open space area - (i) receives at least 3 hours of

Assessable Development			
Specific Outcomes		**Probable Solutions**	
	Diagram 3. **Note -** In circumstances where the land gradient is unsuitable to provide the required private open space at ground level, above ground level decks and balconies may constitute a higher proportion of the total required private open space area.		sunlight between 9am and 3pm on June 21 over 100 percent of the area; (ii) is orientated within 20 degrees of north.
	Safety and Security -		
S9.	The site layout and building is designed to overlook streets and driveways to provide casual surveillance.	**P9.**	The use is designed to present the front door and/or a habitable room window, balcony and the like to the street. **Note -** To assist in achieving S9. refer to Planning Scheme Policy 16 - Safer By Design.
	Service Facilities -		
S10.	(1) Service facilities are provided to meet the needs of residents and are sited and designed in an unobtrusive and convenient manner; (2) An on-site waste collection system has two wheelie bins stored external to the garage in the curtilage of the dwelling house and screened from view.	**P10.**	(1) Service facilities include - (a) an open air clothes drying facility that is a minimum of $10m^2$ and located in a sunny, ventilated and convenient location that is screened from view from the street; (b) a waste and recycling bin storage area that is sited greater than 6 metres from the road frontage and capable of accommodating two waste bins; (c) storage space that - (i) is a minimum of $3m^2$; (ii) is accessible from external areas; (iii) is lockable; (iv) has a minimum internal height of 2.1 metres; (v) is screened from public view. **Note -** ■ This space may form part of a carport or garage. ■ Storage areas are exclusive of private open space areas. (2) No probable solution identified.

Table 1 - Building Siting and Design Requirements

Standard	Requirement
Building Height	(1) The use does not exceed - (a) a maximum building height of 8.5 metres above ground level; (b) 2 storey; (2) The use is located within a three dimensional envelope that is a maximum of - (a) 4.5 metres above ground level at the side and rear boundaries and increasing at 45 degrees to a maximum height of 8.5 metres above ground level; (b) 4.5 metres above ground level with a maximum mean of 3.5 metres within 6 metres of the front boundary Refer to Diagram 6.
Site Coverage	(1) 50 percent, unless specified differently in a zone code.
Front Setback	(1) In newly developing areas, where a front setback has not been established in the street - (a) the dwelling is setback at least 6 metres from any road alignment where the road is higher in order than a Collector Road; or (b) the dwelling is setback at least 3 metres from any road alignment in any other case; or (2) In areas where a front setback is established the use is located between the setbacks of other dwelling units in the street.
Side Setback	(1) Minimum 1.5 metres to wall and 900mm for eaves and window hoods.
Rear Setback	(1) Minimum 4 metres; or (2) Minimum 2.5 metres for lots which have an average depth of 25 metres or less.
Built to Boundary	(1) Walls are located on the southern side of the lot to improve solar access with the northern setback increased to a minimum of 2 metres, or as required by the front setback; (2) The built to boundary wall - (a) is a maximum of 15 metres in total length with a maximum length of 9 metres without articulation; (b) articulation is consistent with the side and rear setback criteria above; (c) has no windows or doors to the boundary; (d) is an average height of 3 metres; (e) is a maximum height of 3.5 metres.
Building Length	(1) A maximum of 25 metres, that may be in two parts provided combined length does not exceed 25 metres, including garages, decks, verandahs and is articulated at a maximum length of 9 metres. Excludes unenclosed covered walkways, with a maximum height 2.5 metres and maximum width 1.2 metres.

Diagram 1 - Design techniques to avoid overlooking

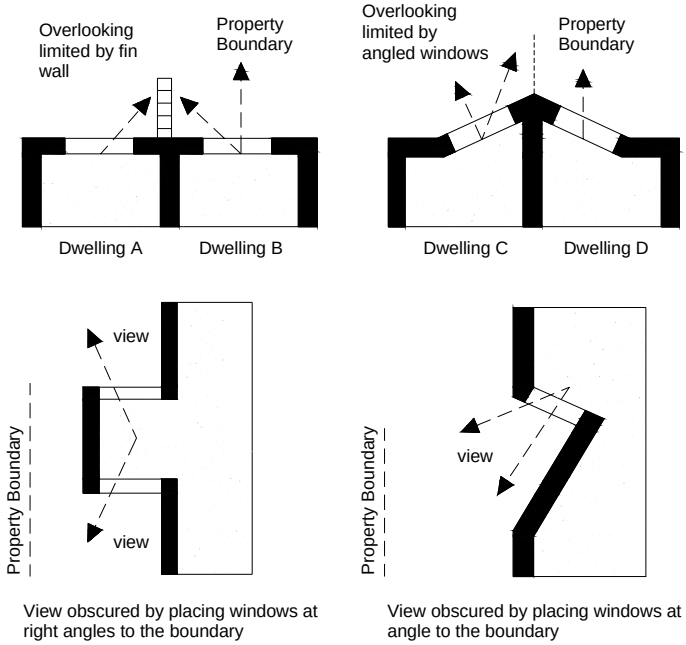

Diagram 2 - Front fencing design

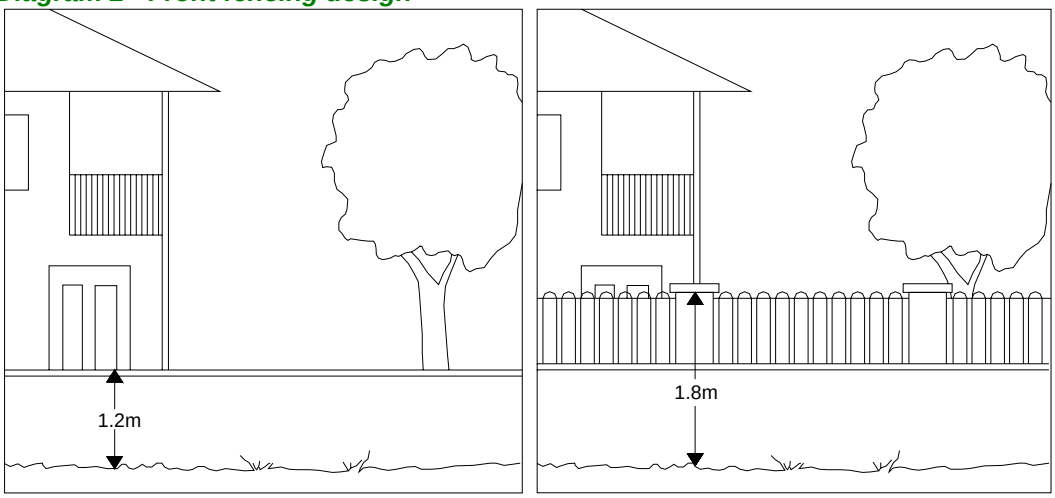

Diagram 3 - Design for private open space

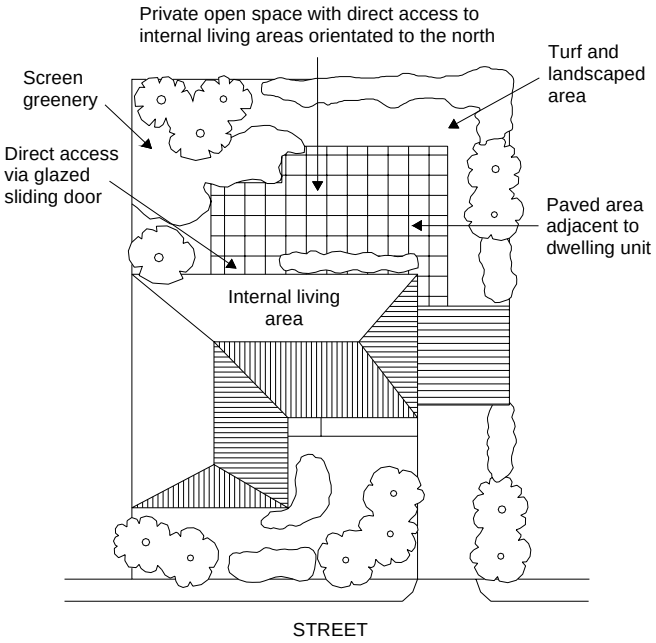

Small Lot House

Diagram 4 - Garage design

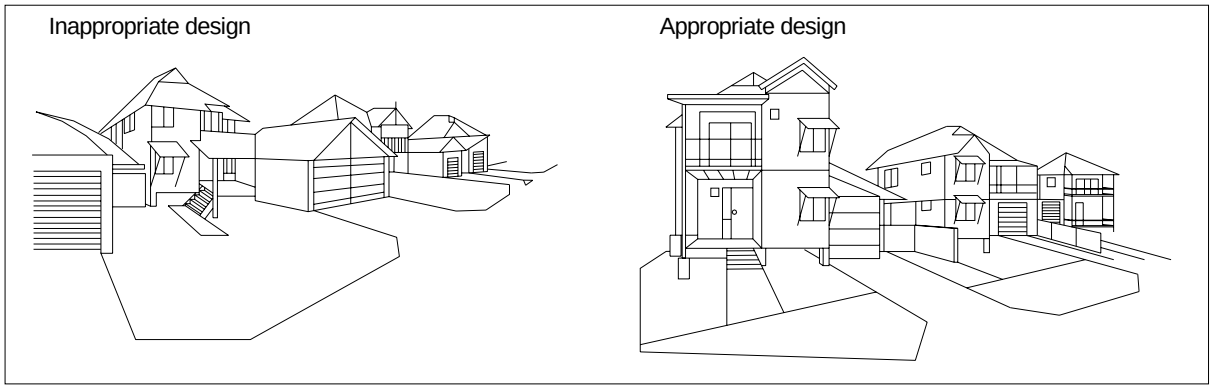

Diagram 5 - Garage width

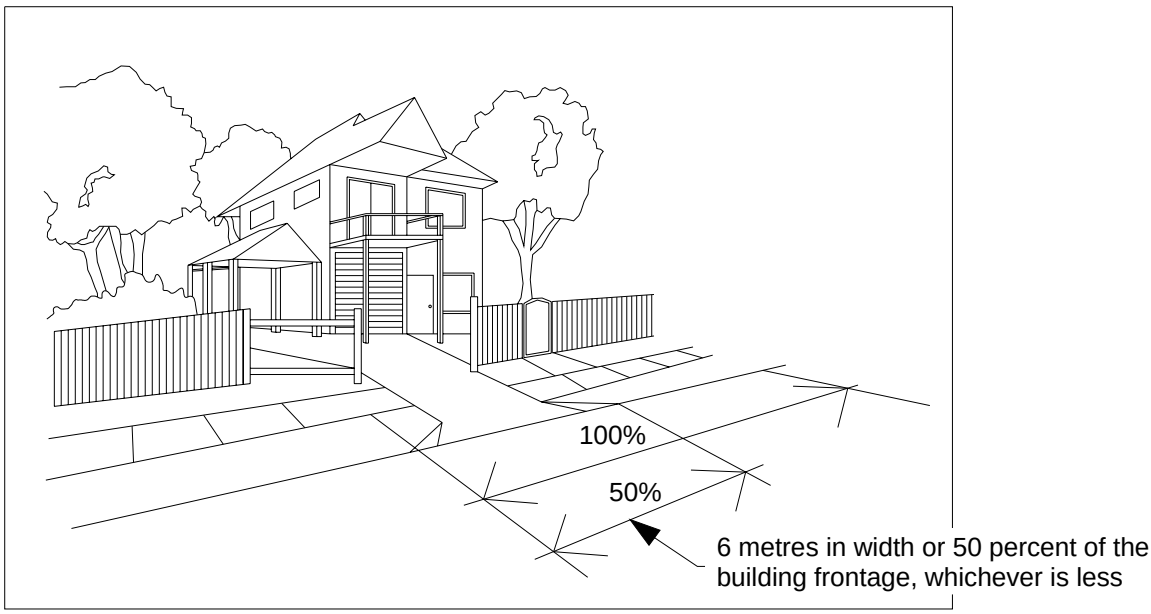

Diagram 6 - Three dimensional envelope

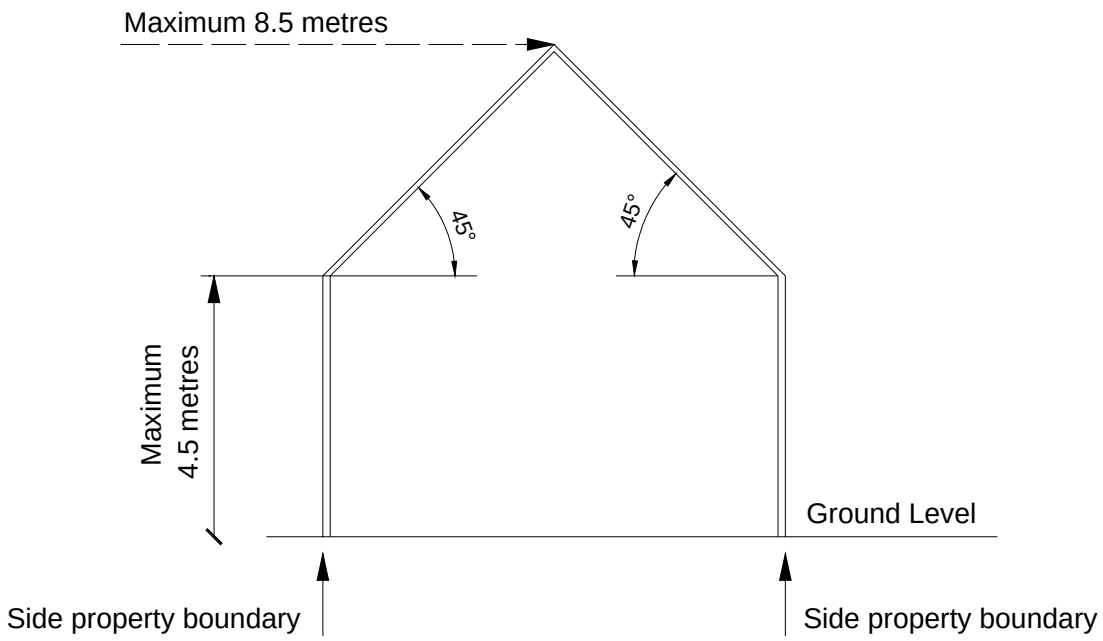

Division 26 - Telecommunications Facility

6.26.1 Introduction

(1) This division contains the provisions for Telecommunications Facility Code, that incorporates -

(a) Compliance with the Telecommunications Facility Code (section 6.26.2);

(b) Overall Outcomes of the Telecommunications Facility Code (section 6.26.3);

(c) Acceptable Solutions applicable to Self-Assessable Development (section 6.26.4);

(d) Specific Outcomes and Probable Solutions applicable to Assessable Development (section 6.26.5).

6.26.2 Compliance with the Telecommunications Facility Code

(1) Development that is consistent with the following complies with Telecommunications Facility Code -

(a) acceptable solutions in section 6.26.4 where self-assessable development;

(b) specific outcomes in section 6.26.5 where assessable development.

Note -

- This code applies to all telecommunications facilities other than those defined as a "low-impact facility" under the *Telecommunications (Low Impact Facilities) Determination 1997*;
- Planning Scheme Policy 13 - Telecommunications Facility will assist in achieving the specific outcomes in the Telecommunications Facility Code.

6.26.3 Overall Outcomes of the Telecommunications Facility Code

(1) The overall outcomes are the purpose of the Telecommunications Facility Code.

(2) The overall outcome sought for the Telecommunications Facility Code is the following -

(a) to ensure the use -

(i) is located, designed and constructed to achieve a high level of visual integration with the natural and built environment;

(ii) provides for the safe and effective establishment of telecommunications facilities;

(iii) avoids the proliferation of telecommunications facilities by promoting the sharing or co-location of facilities.

6.26.4 Acceptable Solutions applicable to Self-Assessable Development

Self-Assessable Development	
Acceptable Solutions	
A1.	(1) Installation of the telecommunications facility is for a maximum period of 3 months in any 12 month period, and is for one or more of the following purposes - (a) to continue coverage during the servicing and maintenance of another telecommunications facility; or (b) pending completion of the installation of a new telecommunications facility; or (c) in an emergency, such as a storm, bushfire or flood; or (d) at public events, such as sports carnivals or cultural festivals; (2) The telecommunications facility is a maximum of 25 metres in height; (3) No native plants are removed.

6.26.5 Specific Outcomes and Probable Solutions applicable to Assessable Development

Assessable Development			
Specific Outcomes		**Probable Solutions**	
	Location -		
S1.	(1) Telecommunications facilities are located having regard to - (a) network and coverage requirements; (b) opportunities for co-location with other telecommunications facilities or existing structures; (c) provision of access that - (i) is safe and convenient; (ii) is of an all weather standard; (iii) does not interfere with the current use of the site including - a. access to existing buildings and structures; b. sight lines when entering or exiting the site; c. car parking and manoeuvring areas; (d) their size and scale.	**P1.**	(1) Telecommunications facilities - (a) are located to fill an identified coverage gap, refer to Diagram 1; or (b) are located in accordance with a telecommunications network plan agreed to by the local government and the carrier; (c) are located either - (i) mounted flush on community infrastructure, such as water supply reservoirs, sports complexes or light poles; or (ii) on building rooftops, to minimise visual appearance; or (iii) within existing underground conduits or ducts; or (iv) co-located on existing carrier infrastructure such as freestanding towers; (d) where attached to existing structures are - (i) located at the centre of rooftops to reduce their visibility at the side edges of the building, while maintaining rooftop access; or (ii) mounted flush on the sides of buildings to limit the height they protrude above the side edges of the building; or

Assessable Development			
Specific Outcomes		**Probable Solutions**	
			(e) where located on a freestanding tower - (i) are not within - a. 200 metres of a residential area; b. 300 metres of education facilities, childcare centres, aged and special needs housing, or other sensitive receiving environments; (ii) are not located within the minimum required setback from the boundary, as specified in the relevant zone code; (iii) do not exceed a height of 25 metres above ground level, unless surrounding vegetation or structures are higher, in which case the height may exceed 5 metres above the tree canopy or structure, to a maximum of 35 metres; (iv) are installed with outriggers rather than head frames; or **Note -** Where a head frame is proposed it is demonstrated why it is required. (f) where an equipment shelter - (i) are not located within the minimum required setback from the boundary, as specified in the relevant zone code; (ii) are located at ground level; (iii) do not interfere with the use of land.
S2.	<u>Amenity and Character -</u> (1) Telecommunications facilities - (a) are consistent with the character and amenity of surrounding structures and vegetation; (b) do not impede native animal movement; (c) are designed and constructed to complement the character and amenity of the area, having particular regard to - (i) the urban environment; (ii) the natural landscape setting;	**P2.**	(1) Telecommunications facilities - (a) when installed and operated limit adverse impacts on vegetation by - (i) re-establishing native plants to - a. replace lost habitat; b. maintain native animal movement corridors; c. enhance the appearance of the telecommunications facility; (ii) incorporating vegetative

Telecommunications Facility

Assessable Development			
Specific Outcomes		**Probable Solutions**	
	(iii) topographical features; (d) are designed to minimise glare and reflection to surrounding properties; (e) minimise shadowing on adjoining properties; (f) are screened from view.		screening that is - a. compatible with the scale and location of the telecommunications facility; b. distanced to allow ease of access for servicing and maintenance; c. located within the lease area unless otherwise specified by the local government; (b) are designed and constructed to complement the surrounding area by - (i) using colours that match the surrounding natural and built environment; (ii) incorporating a range of non-reflective materials, textures and finishes that reflect the character of the surrounding area; (c) incorporate community facilities such as shelters and seating, when located in recreation areas.
S3.	Public Health and Safety – (1) Telecommunications facilities do not adversely impact on the health and safety of the public in adjoining and nearby properties.	**P3.**	(1) Telecommunications facilities - (a) are designed and operated to restrict electromagnetic emissions (EME) in accordance with - (i) *Radiocommunications (Electromagnetic Radiation - Human Exposure) Standard 2003;* (ii) *Radiation Protection Standard for Maximum Exposure Levels to Radiofrequency Fields - 3kHz to 300GHz;* (b) are enclosed by secure perimeter fencing to restrict unauthorised access; (c) incorporate safety and warning signage to discourage unauthorised access; (d) are separated from sensitive receiving environments. **Note -** ■ An EME report is to be prepared and submitted by a suitably qualified and experienced person; ■ Refer to Planning Scheme Policy

Assessable Development			
Specific Outcomes		**Probable Solutions**	
			13 - Telecommunications Facility for additional requirements.
S4.	Site Restoration – (1) Upon cessation of the use - (a) decommissioned or obsolete facilities, including structures are removed from the site; (b) the site is restored to an acceptable condition, including revegetation and reinstatement of ground cover as required.	**P4.**	(1) No probable solution identified.

Diagram 1 - Location of the telecommunications facility fills an identified coverage gap

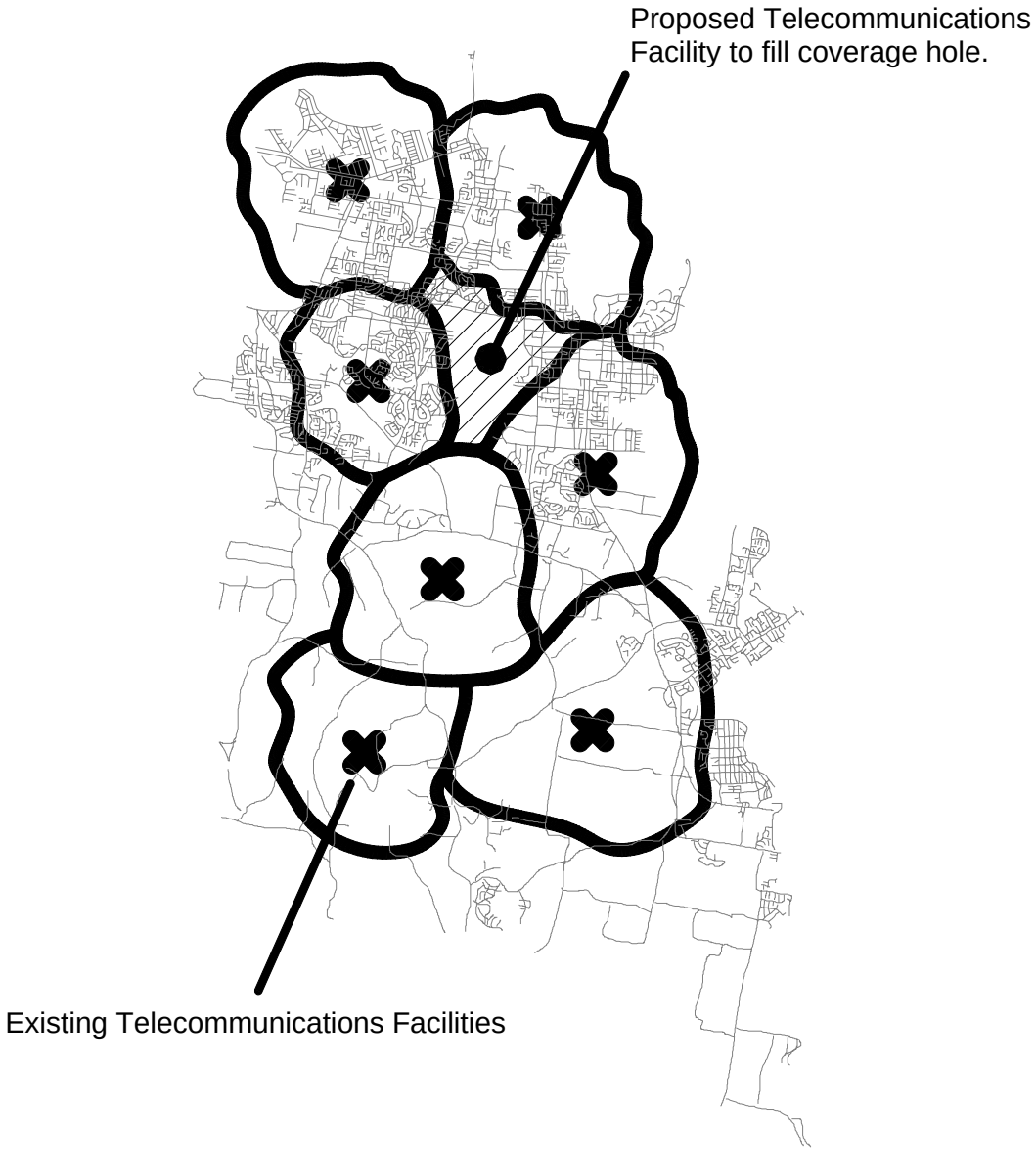

this page purposely
left blank

Division 27 - Temporary Use

6.27.1 Introduction

(1) This division contains the provisions for the Temporary Use Code, that incorporates -

(a) Compliance with the Temporary Use Code (section 6.27.2);

(b) Overall Outcomes of the Temporary Use Code (section 6.27.3);

(c) Acceptable Solutions applicable to Self-Assessable Development (section 6.27.4);

(d) Specific Outcomes and Probable Solutions applicable to Assessable Development (section 6.27.5).

6.27.2 Compliance with the Temporary Use Code

(1) Development that is consistent with the following complies with the Temporary Use Code -

(a) acceptable solutions in section 6.27.4 where self-assessable development, or

(b) specific outcomes in section 6.27.5 where assessable development.

6.27.3 Overall Outcomes of the Temporary Use Code

(1) The overall outcomes are the purpose of the Temporary Use Code.

(2) The overall outcome sought for the Temporary Use Code is the following -

(a) to ensure the use -

(i) facilitates opportunities for a lot or premises to be temporarily used for recreation, education, sport, economic, social, cultural or community events which contribute to community life;

(ii) does not result in adverse impacts on the external traffic network, safety, amenity, health, infrastructure, city image or the viability of centres;

(iii) restores the lot or premises to its original condition at the completion of the use.

6.27.4 Acceptable Solutions applicable to Self-Assessable Development

Self-Assessable Development	
Acceptable Solutions	
A1.	(1) The use - (a) does not require the construction of a permanent building or structure; (b) does not require the installation of permanent infrastructure or services; (c) is an irregular or infrequent use; (d) does not exceed 21 days in any 12 month period, with not one single period exceeding 10 days duration.

6.27.5 Specific Outcomes and Probable Solutions applicable to Assessable Developm ent

Assessable Development			
Specific Outcomes		**Probable Solutions**	
S1.	Location - (1) The site on which the use is located is sufficient to - (a) accommodate the proposed activity; (b) accommodate the expected number of users/visitors; (c) mitigate any significant impacts for the duration of the use.	**P1.**	(1) No probable solution identified.
S2.1	Amenity - (1) The use is located and operated to minimise adverse impacts on amenity on neighbouring premises, having regard to - (a) hours of operation; (b) traffic; (c) the location of parking areas; (d) waste storage and collection and litter management; (e) signage; (f) visual amenity; (g) privacy; (h) odour and dust emissions.	**P2.1**	(1) No probable solution identified. **Note -** Signage is consistent with the requirements of - ■ Part 7 - Division 1 - Advertising Devices Code; ■ *Local Law No.11 - Control of Signs*.
S2.2	Storage of goods or materials in open areas is screened from view from the road or nearby properties.	**P2.2**	No probable solution identified.
S2.3	(1) Noise and lighting emissions from the use do not adversely impact on nearby premises, particularly dwelling units and other sensitive receiving environments, by - (a) regulating the hours of operation; (b) orientating access points, carparking, lighting, spectator	**P2.3**	(1) No probable solution identified.

Assessable Development			
Specific Outcomes		**Probable Solutions**	
	areas and other major noise sources to minimise impacts on amenity of surrounding areas; (c) locating plant and equipment away from sensitive receiving environments; (d) enclosing plant and equipment such as air-conditioning in an acoustic housing.		
	Operational Arrangements -		
S3.1	(1) Arrangements are made for the effective management of the use, including - (a) providing the contact details of the operator to the local government; (b) providing all necessary insurance information to the local government before the use begins; (c) ensuring the lot or premises is cleaned up and restored to the original condition on completion of the use.	**P3.1**	(1) No probable solution identified.
S3.2	Arrangements are made for providing emergency facilities, first aid and other services.	**P3.2**	No probable solution identified.

this page purposely
left blank

Division 28 - Tourist Accommodation

6.28.1 Introduction

(1) This division contains the provisions for the Tourist Accommodation Code, that incorporates -

(a) Compliance with the Tourist Accommodation Code (section 6.28.2);

(b) Overall Outcomes for the Tourist Accommodation Code (section 6.28.3);

(c) Specific Outcomes and Probable Solutions applicable to Assessable Development (section 6.28.4).

6.28.2 Compliance with the Tourist Accommodation Code

(1) Development that is consistent with the specific outcomes of section 6.28.4 complies with the Tourist Accommodation Code.

6.28.3 Overall Outcomes of the Tourist Accommodation Code

(1) The overall outcomes are the purpose of the Tourist Accommodation Code.

(2) The overall outcome sought for the Tourist Accommodation Code is the following -

(a) to ensure the use –

(i) provides short-term accommodation for visitors;

(ii) is located and designed to integrate with the varied design themes for the range of tourist settings envisaged including -
a. urban based tourism;
b. rural based tourism;
c. bushland based tourism;
d. island based tourism.

6.28.4 Specific Outcomes and Probable Solutions applicable to Assessable Developm ent

Assessable Development			
Specific Outcomes		**Probable Solutions**	
	Location -		
S1.1	(1) The location of the use - (a) for urban based tourist accommodation - (i) is in close proximity to - a. tourist and other visitor attractions and facilities; b. social, cultural, and leisure facilities; c. public transport services; (b) for rural and bushland based tourist accommodation - (i) utilises previously disturbed sites; (ii) minimises disturbance to environmental values of the locality; (iii) maintains the landscape values of the surrounding locality; (iv) where located in a rural setting the use is compatible with on-site or nearby rural activities such as agriculture; (c) for island based tourist accommodation- (i) where at Point Lookout or Dunwich on NSI, the Southern Moreton Bay Islands or Coochiemudlo Island - a. minimises impacts on key visual landscapes; b. is accessible to natural and outdoor attractions; c. utilises previously disturbed sites; d. minimises disturbance to environmental values of the locality; (ii) where at Amity, NSI - a. is located to avoid erosion prone areas; b. utilises previously disturbed sites; c. minimises disturbance to environmental values of the locality.	**P1.1**	(1) No probable solution identified. **Note -** Refer to the relevant zone code to establish if the use is consistent with that zone.

Tourist Accommodation

Assessable Development			
Specific Outcomes		**Probable Solutions**	
S1.2	(1) The use is located on a lot or premises that is of a size and configuration capable of accommodating - (a) landscaping; (b) parking and servicing requirements such as waste storage and collection areas; (c) amenities and other facilities; (d) open space areas.	**P1.2**	(1) No probable solution identified.
	Design -		
S2.1	(1) The layout and design of the use - (a) for urban based tourist accommodation - (i) integrates with the existing built form, streetscape, topography and landscape character of the locality; (ii) forms a component of mixed use developments; (iii) maintains the amenity of adjoining and nearby properties; (b) for rural, bushland or island based tourist accommodation - (i) is compatible with the rural, bushland or island character; (ii) minimises impacts on environmental values; (iii) complements the natural topography and landscape setting; (iv) promotes the use of local or recycled building materials.	**P2.1**	(1) No probable solution identified.
S2.2	(1) The use involves accommodation types that are suitable to the locality, being - (a) urban based tourism - motels, guesthouses, serviced apartments, backpacker hostels, holiday units and the like; (b) rural based tourism - farm stays, health farms, retreats, cottages and the like; (c) bushland based tourism - cabins, cottages, eco-tourism and the like; (d) island based tourism - guesthouses, serviced apartments, backpacker hostels, holiday units, cabins, cottages, eco-tourism and the	**P2.2**	(1) No probable solution identified.

Assessable Development			
Specific Outcomes		**Probable Solutions**	
	like.		
	Landscaping -		
S3.1	(1) Landscaping - (a) enhances the external appearance of the use; (b) integrates the use with the streetscape or its tourist setting; (c) assists in buffering the use from adjoining sensitive receiving environments.	**P3.1**	(1) No probable solution identified.
S3.2	(1) Plant species used for landscaping are native to the locality.	**P3.2**	(1) Species used for landscaping - (a) are selected form the native plants listed in Part 9 - Schedule 10 - Vegetation Species List; (b) in the road reserve are selected from Part 9 - Schedule 9 - Street Trees.
	Car Parking and Access -		
S4.1	(1) Design and layout of access, car parking and on-site vehicle movement areas - (a) facilitates safe and convenient movement by guests, employees and service vehicles; (b) ensures the road from which access is gained is constructed to a standard capable of accommodating expected traffic.	**P4.1**	(1) No probable solution identified; **Note -** Refer to Part 8 - Division 1 - Access and Parking for additional requirements.
S4.2	Internal accessways and pedestrian paths address the mobility requirements of all people particularly those requiring disabled access.	**P4.2**	The use is designed in accordance with the provisions of *Australian Standard 1428:2001 – Design for Access and Mobility*.
S4.3	On-site car parking caters for employees and visitors.	**P4.3**	Car parking provision complies with Part 9 - Schedule 1 - Access and Parking, Table 1 - Minimum On-Site Vehicle Parking Requirements.
	Services -		
S5.	(1) On-site waste collection is designed to incorporate adequate manoeuvring and storage areas.	**P5.**	(1) An on-site waste collection system has - (a) Sufficient waste collection vehicle manoeuvring area to enter and exit the site in a forward gear; (b) centralised bulk bin container storage area.

Division 29 -Tourist Park

6.29.1 Introduction

(1) This division contains the provisions for the Tourist Park Code, that incorporates -

(a) Compliance with the Tourist Park Code (section 6.29.2);

(b) Overall Outcomes of the Tourist Park Code (section 6.29.3);

(c) Specific Outcomes and Probable Solutions applicable to Assessable Development (section 6.29.4).

6.29.2 Compliance with the Tourist Park Code

(2) Development that is consistent with the specific outcomes of section 6.29.4 complies with the Tourist Park Code.

6.29.3 Overall Outcomes of the Tourist Park Code

(1) The overall outcomes are the purpose of the Tourist Park Code.

(2) The overall outcome sought for the Tourist Park Code is the following -

(a) to ensure the use -

(i) is located in close proximity to tourist and other visitor attractions and facilities;

(ii) is located on a lot or premises that is of a size and configuration capable of accommodating the use;

(iii) maintains the amenity of adjoining and nearby properties;

(iv) provides a high quality environment for users;

(v) provides landscaping that protects and enhances visual amenity for adjoining and nearby properties;

(vi) provides for safe movement of pedestrians and vehicles internally and externally to the lot or premises;

(vii) provides communal facilities that cater for the needs of expected end users.

6.29.4 Specific Outcomes and Probable Solutions applicable to Assessable Developm ent

Assessable Development			
Specific Outcomes		**Probable Solutions**	
S1.	(1) The use is located - (a) in close proximity to tourist and other visitor attractions and facilities; (b) near urban areas and centres; (c) on a road system that has the capacity to accommodate increases in traffic volumes generated by the use.	**P1.**	(1) No probable solution identified. **Note -** Refer to the relevant zone code to establish if the use is consistent with that zone.
S2.1	(1) The use is located on a lot or premises that is of a size and configuration capable of accommodating - (a) caravans, cabins and tents; (b) landscaped buffer areas; (c) amenities and other facilities; (d) servicing requirements such as waste storage and collection areas.	**P2.1**	(1) The use - (a) is located on a lot or premises with a minimum area of 4000m²; (b) achieves a maximum density of - (i) 1 caravan/cabin site per 130m^2; (ii) 1 tent site per 100m^2.
S2.2	(1) Layout and design - (a) integrates with the existing built form, streetscape, topography and landscape character of the locality; (b) ensures that no individual accommodation site has direct access to an external roadway.	**P2.2**	(1) No probable solution identified.
S2.3	(1) The use maximises privacy (visual and acoustic) through - (a) providing adequate separation from - (i) roads; (ii) adjoining uses; (b) providing adequate separation between - (i) individual accommodation sites; (ii) accommodation sites and internal accessways; (2) Where having a common boundary with a sensitive receiving environment provide - (a) generous setbacks that accommodate planted landscaped buffers; (b) solid fencing on external boundaries.	**P2.3**	(1) The use - (a) is setback a minimum distance of - (i) 10 metres from public street frontages; (ii) 4 metres from external property boundaries; (b) ensures individual accommodation sites are - (i) separated by a minimum distance of 3 metres; (ii) setback a minimum distance of 2 metres from internal accessways; (2) Where having a common boundary with a sensitive receiving environment -provide a densely planted 3 metre wide landscaped buffer in combination with a 2 metre high solid fence.

Assessable Development			
Specific Outcomes		**Probable Solutions**	
S2.4	(1) Incorporates landscaping, fencing and open space to enhance the external appearance and promote visual amenity and safety.	**P2.4**	(1) Provide planted landscaped along all external boundaries that is - (a) a minimum of 3 metres wide for all street frontages; (b) a minimum of 2 metres wide for all other boundaries; (c) able to achieve a height of 4 metres.
S3.1	(1) Internal accessways and pedestrian paths are provided to - (a) ensure safe vehicular and pedestrian movement throughout the use; (b) address the mobility requirements of all people, particularly those requiring disabled access; (c) locate vehicle parking in accessible areas; (d) provide access for service and emergency vehicles.	**P3.1**	(1) The use - (a) provides vehicular access to individual accommodation sites and other buildings from a shared internal accessway; (b) provides internal accessways that - (i) where serving 20 or more individual accommodation sites provides a minimum - a. carriageway width of 6.5 metres; b. verge and carriageway width of 9.5 metres with a minimum verge of 1.5 metres; (ii) where serving less than 20 individual accommodation sites provides a minimum - a. carriageway width of 5.5 metres with widening on curves; b. verge and carriageway width of 8.5 metres with a minimum verge of 1.5 metres; (c) provides pedestrian paths that connect individual accommodation sites with amenities, open space and external roads; (d) provides night lighting to internal accessways and pedestrian paths; (e) provides formed accessways and pedestrian paths to each individual accommodation site; (f) is designed in accordance with the provisions of *Australian Standard 1428:2001 - Design for Access and Mobility*.
S3.2	On-site car parking caters for visitor and guest vehicle parking.	**P3.2**	Car parking provision complies with Part 9 -Schedule 1 - Access and Parking, Table 1 - Minimum On-Site Vehicle Parking Requirements.

Assessable Development			
Specific Outcomes		**Probable Solutions**	
S4.1	(1) The use is provided with communal facilities such as cooking, indoor recreation, toilet, washing, drying, bathing and showering facilities that are based on the - (a) number of projected site users; (b) age and gender of users; (c) frequency of use during peak and quiet periods; (d) need to provide for specific groups such as people with disabilities or parents with children; (e) security and safety of users.	**P4.1**	(1) The use - (a) provides communal toilet facilities that - (i) where serving less than 40 individual accommodation sites a minimum of - a. 1 pedestal toilet per 7 sites or part thereof is provided for female occupants; b. 1 pedestal toilet per 10 sites or part thereof and a 0.6 metre urinal per 20 sites or part thereof is provided for male occupants; or (ii) where serving 40 or more individual accommodation sites in addition to (1)(a)(i) above - a. for every 15 additional sites, 1 pedestal is provided for both female and male occupants; b. for every 20 additional sites, a 0.6 metre urinal is provided for male occupants; (b) provides toilet and washing facilities - (i) within 100 metres of every accommodation site; (ii) that are setback a minimum distance of 6 metres to any accommodation site; (c) provides continuous paving to and around toilet facilities; (d) ensures toilet facilities are designed in accordance with *Australian Standard 1428:2001 - Design for Access and Mobility*; (e) provides landscaping that maintains sightlines to toilet and shower facilities by - (i) limiting shrubs and garden beds to a maximum height of 800mm; (ii) selecting tree species that have a single trunk clear of foliage for 1.8 metres above ground level; (f) provides communal washing and drying facilities that - (i) where serving less than 20 individual accommodation sites a minimum of - a. 1 laundry tub, 1

Assessable Development			
Specific Outcomes		**Probable Solutions**	
			washing machine and 1 clothes line is provided for every 20 sites or part thereof; or (ii) where serving more than 40 individual accommodation sites - a. 1 mechanical clothes dryer is provided for every 80 sites exceeding the first 40 sites or part thereof.
S4.2	(1) On-site waste collection is designed to incorporate adequate manoeuvring and storage areas.	**P4.2**	(1) An on-site waste collection system has - (a) sufficient waste collection vehicle manoeuvring area to enter and exit the site in a forward gear; (b) centralised bulk bin container storage area.

this page purposely left blank

Part 7 - Other Development Codes

Note -

Summary of Other Development Codes

Other Development Codes
■ Advertising Devices ■ Communications Structures ■ Domestic Additions ■ Domestic Driveway Crossover ■ Domestic Outbuilding ■ Excavation and Fill ■ On-Site Raising and Relocation ■ Private Swimming Pool ■ Private Tennis Court ■ Private Waterfront Structures ■ Reconfiguration

Other Development Codes Summary

this page purposely
left blank

Division 1 - Advertising Devices

7.1.1 Introduction

(1) This division contains the provisions for the Advertising Devices Code, that incorporates -

(a) Compliance with the Advertising Devices Code (section 7.1.2);

(b) Overall Outcomes of the Advertising Devices Code (section 7.1.3);

(c) Acceptable Solutions applicable to Self-Assessable Development (section 7.1.4);

(d) Specific Outcomes and Probable Solutions applicable to Assessable Development (section 7.1.5).

7.1.2 Compliance with the Advertising Devices Code

(1) Development that is consistent with the following complies with the Advertising Devices Code -

(a) acceptable solutions in section 7.1.4 where self-assessable development; or

(b) specific outcomes in section 7.1.5 where assessable development.

Note -

- Temporary advertising devices do not constitute 'development' in terms of the *Integrated Planning Act 1997* and are not regulated by this planning scheme.
- *Local Law No. 11* regulates temporary advertisements and assesses all advertisements (temporary and permanent) for the issuing of licences.

7.1.3 Overall Outcomes of the Advertising Devices Code

(1) The overall outcomes are the purpose of the Advertising Devices Code.

(2) The overall outcome sought for the Advertising Devices Code is the following -

(a) to ensure advertising devices -

(i) are designed and located to achieve public safety;

(ii) achieve high quality design;

(iii) are sited in an orderly manner to minimise visual clutter and do not dominate or detract from the built form or landscape setting of the locality.

7.1.4 Acceptable Solutions applicable to Self-Assessable Development

Self-Assessable Development	
Acceptable Solutions	
A1.	(1) The advertising device - (a) is listed and complies with Table 1 of Part 9 - Schedule 8 - Specific Advertising Devices; (b) complies with Diagrams 1, 2 and 3 of Part 9 - Schedule 8 - Specific Advertising Devices; (c) has a maximum height of 2 metres and a width of 1.2 metres; (d) does not alter the shape or outline of a building by extending beyond or above walls, parapets or roofs; (e) is not illuminated, does not flash, is not audible and contains no moving parts; (f) is located on the premises to which the sign relates; or (2) For specific uses - (a) an advertising device for a home business or bed and breakfast - (i) is less than 0.25m^2 in size; (ii) displays only the occupier's name, business name, telephone number, website and email address; (iii) is attached to front fencing or building façade; (iv) has a maximum height of 1.5 metres above ground level; or (b) an advertising device for a rural enterprise or display dwelling - (i) is less than 1m^2 in size; (ii) is entirely within the premises or on the premises fence facing a road; (iii) has a maximum height of 2 metres above ground level and a width of 1.2 metres for free standing signs; or (3) The advertising device is required by law to be erected for any purpose relating to providing public notice of an application as required under federal, state or local government statutory provisions; or (4) The advertising device is contained wholly within a building and no part is visible from public outdoor areas.

7.1.5 Specific Outcomes and Probable Solutions applicable to Assessable Development

Assessable Development			
Specific Outcomes		**Probable Solutions**	
S1.	Inconsistent Advertising Devices (1) The following types of advertising devices as defined in Schedule 8 - Table 2 are inconsistent in all zones – (a) above awning; (b) billboard; (c) created roof sign; (d) projecting image; (e) sky sign.	**P1.**	(1) No probable solution identified.
S2.	Design and Location - (1) The advertising device - (a) is located and designed to enhance the appearance of the building or site on which it is erected; (b) avoids dominating or detracting from the built form streetscape and landscape setting of the location.	**P2.**	(1) The advertising device complies with - (a) Table 1 or Table 2 of Part 9 - Schedule 8 - Specific Advertising Devices; (b) Diagrams 1, 2 and 3 of Part 9 - Schedule 8 - Specific Advertising Devices;
S3.	Clearance - (1) Advertising devices provide sufficient clearance to pedestrian thoroughfares and roads, to ensure - (a) pedestrian safety; (b) vandalism is discouraged as signs are beyond the reach of pedestrians; (c) signs are located at a height to avoid conflict with footpath maintenance vehicles.	**P3.**	(1) Awning signs, canopy signs and projecting wall signs provide a minimum clearance of 2.4 metres between the lowest part of the sign and ground level. **Note -** Refer to Diagram 1 - Providing appropriate clearance for advertising Devices
S4.	Illumination - (1) Illuminated advertising devices - (a) are internally illuminated; (b) do not flash; (c) are consistent with the nature and setting of the locality; (d) do not create nuisance to nearby residents or businesses.	**P4.**	(1) The vertical illumination resulting from direct, reflected or other incidental light emanating from the advertising devices does not exceed 8 lux when measured at or above ground level, at any point 1.5 metres outside the boundary of the premises on which it is located.
S5.	Directional Signs - (1) Directional signs - (a) are located on private property and advertise a use on another lot or premises; (b) do not distract from the built	**P5.**	(1) Directional sign - (a) are not greater than 3 metres in height; (b) have a maximum sign area of 2.4m2;

Assessable Development			
Specific Outcomes		**Probable Solutions**	
	form, streetscape and landscape setting of the location; (c) are limited in number and size.		(c) are limited to 1 per property; (d) advertise one of the following uses - (i) community facility; (ii) indoor recreation facility; (iii) outdoor recreation facility; (iv) refreshment establishment; (v) tourist accommodation; (vi) tourist park.
S6.	Safety and Security - (1) Advertising devices are designed, located and maintained to enhance public safety by ensuring they - (a) are not displayed on or attached to a tree, roadside pole or traffic sign; (b) do not resemble a hazard or warning light; (c) are not located beside or behind a set of traffic lights; (d) do not obstruct or distract vehicular, cycle or pedestrian traffic; (e) are located to maintain a pedestrian's view of traffic; (f) are located to maintain a motorist's or cyclist's view of pedestrians, other traffic, or the road ahead.	**P6.**	(1) No probable solution identified.
S7.	Visual Amenity and Character - (1) The positioning and design of advertising devices maintain the character and amenity of the surrounding built form, streetscape and landscape setting by - (a) integrating with the elevation treatment of the building; (b) maintaining consistency with the style, scale, building and roof alignments, colours, patterns and other architectural qualities of the building or premises; (c) maintaining a consistent pattern and theme with the locality or streetscape; (d) maintaining views - (i) of existing development; (ii) to natural landscape features with high visual amenity; (iii) to places of heritage or scenic value; (e) ensuring advertising devices,	**P7.**	(1) No probable solution identified.

Assessable Development			
Specific Outcomes		**Probable Solutions**	
	other than window signs, are not placed across windows, columns or other design features; (f) minimising visual impacts such as clutter, through - (i) coordinating signage to limit their number; (ii) location and design of signs being consistent with the existing façade of the premises or streetscape; (g) concealing conduits, wiring, switches or other electrical apparatus from general view; (h) maintaining visibility and legibility through - (i) the orientation of advertising devices facing approaching observers; (ii) providing an information sign for each premises that clearly identifies the street number, name of the occupier and the activity conducted on the premises. **Note -** Refer to - ■ Diagram 2 - Developing a consistent theme for the location and design of advertising devices in the streetscape; ■ Diagram 3 - Coordinating signage and limiting number of signs.		
S8.	Landscaping - (1) Where practical, the advertising device - (a) is integrated into the form and structure of planting within landscaped areas; (b) avoids the necessity for continual cropping of trees thereby destroying their natural form and appearance; (c) is used to screen power boxes, foundations or the like at ground level.	**P8.**	(2) No probable solution identified.
S9.	Heritage - For an advertising device located on a heritage place or in a character	**P9.**	No probable solution identified.

Assessable Development			
Specific Outcomes		Probable Solutions	
	precinct, design complements the character and period of the heritage place or precinct.		
S10.	Maintenance - The design and location of advertising devices ensures accessibility for repair and maintenance.	**P10.**	No probable solution identified.

Diagram 1 - Providing appropriate clearance for advertising devices

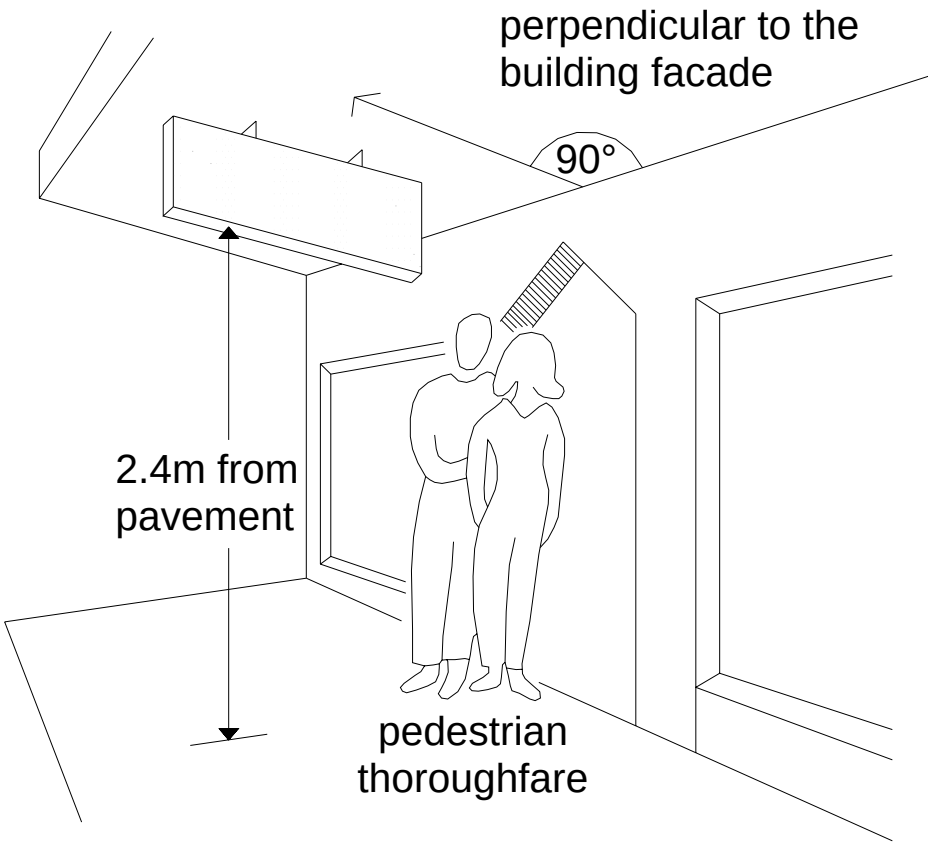

Diagram 2 - Developing a consistent theme for the location and design of advertising devices in the streetscape

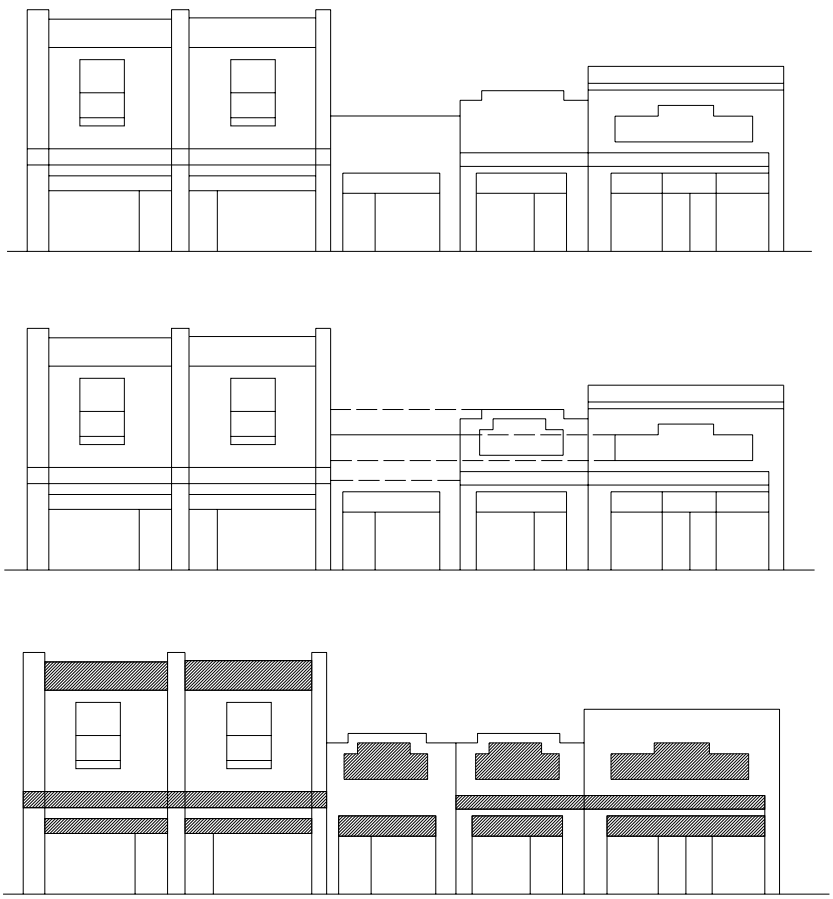

- Original Streetscape
- Transitional Streetscape - signs and building forms
- Final Streetscape - building facades and signs are aligned and integrated

Diagram 3 - Coordinating signage and limiting number of signs

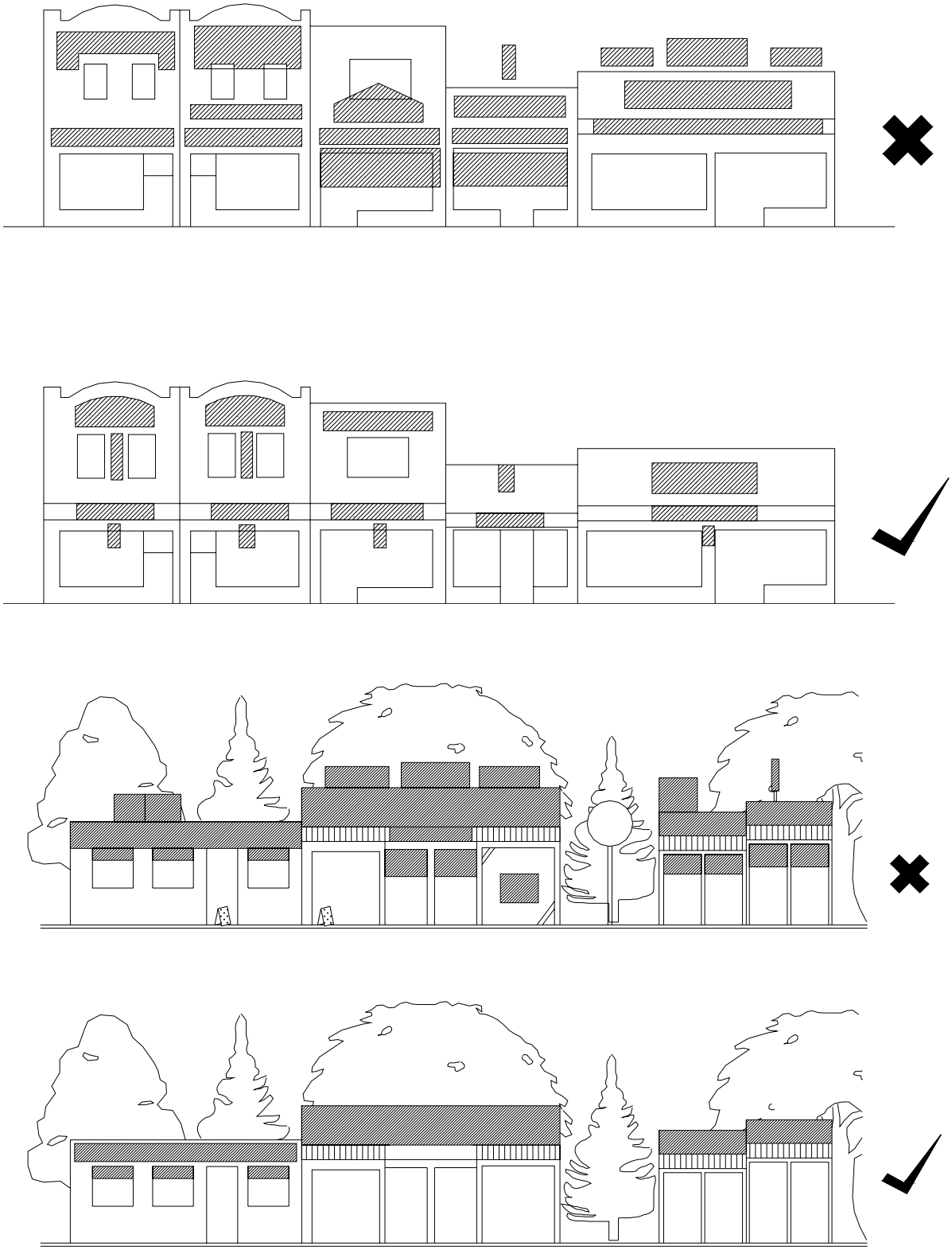

Diagram 4 - Directional Sign

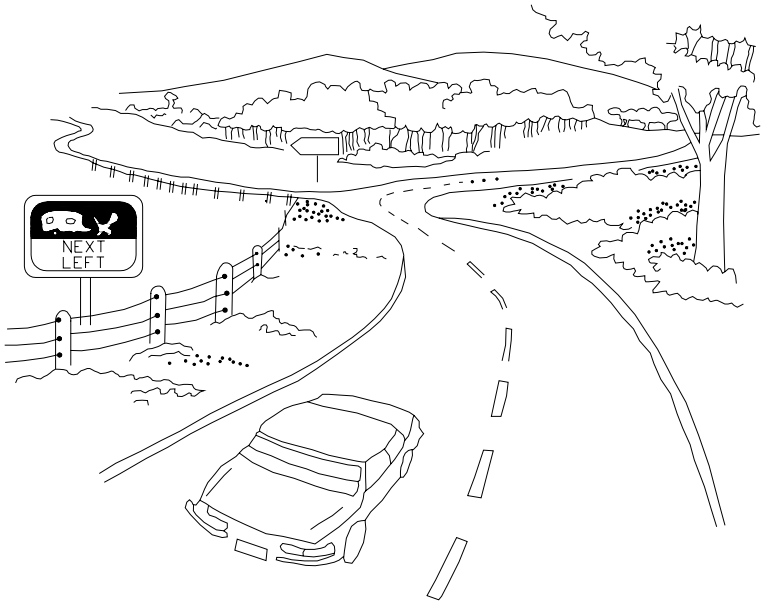

this page purposely
left blank

Division 2 - Communications Structures

7.2.1 Introduction

(1) This division contains the provisions for the Communications Structures Code, that incorporates -

(a) Compliance with the Communications Structures Code (section 7.2.2);

(b) Overall Outcomes of the Communications Structures Code (section 7.2.3);

(c) Acceptable Solutions applicable to Self-Assessable Development (section 7.2.4);

(d) Specific Outcomes and Probable Solutions applicable to Assessable Development (section 7.2.5).

7.2.2 Compliance with the Communications Structures Code

(1) Development that is consistent with the following complies with the Communications Structures Code -

(a) acceptable solutions in section 7.2.4 where self-assessable development; or

(b) specific outcomes in section 7.2.5 where assessable development.

7.2.3 Overall Outcomes of the Communications Structures Code

(1) The overall outcomes are the purpose of the Communications Structures Code.

(2) The overall outcome sought for the Communications Structures Code is the following -

(a) to ensure communications structures do not adversely impact on the streetscape or landscape amenity.

7.2.4 Acceptable Solutions applicable to Self-Assessable Development

Self-Assessable Development	
Acceptable Solutions	
A1.	(1) The communications structure has a maximum diameter of - (a) 1.2 metres in the Emerging Urban Community Zone, Low Density Residential Zone, Medium Density Residential Zone, Park Residential Zone, Point Lookout Residential Zone, SMBI Residential Zone or Urban Residential Zone; or (b) 2 metres in all other zones; (2) The communications structure has a maximum height of - (a) 10 metres above ground level when it is detached from a building or structure; or (b) 3.5 metres above the building or structure when attached; (3) The communications structure is - (a) located behind the front building line; (b) setback from side and rear boundaries of the lot or premises - (i) where the height of the communications structure is less than 4.5 metres above ground level - a minimum of 1.5 metres; or (ii) where the height of the communications structure is between 4.5 metres and 7.5 metres above ground level - a minimum of 2 metres; or (iii) where the height of the communications structure is not more than 7.5 metres and it is located on a lot with a frontage of less than 15 metres - is in accordance with Table 1 - Narrow Lot Minimum Side and Rear Boundary Setbacks; or (iv) where the height of the communications structure is more than 7.5 metres above ground level - a minimum of 2 metres, plus 0.5 metres for every 3 metres or part thereof by which the height of the communications structure exceeds 7.5 metres above ground level; (4) The communications structure does not result in there being more than two communications structures on the lot or premises.

7.2.5 Specific Outcomes and Probable Solutions applicable to Assessable Development

Assessable Development			
Specific Outcomes		**Probable Solutions**	
S1.	(1) Communications structures - (a) are located, and are of a size, height and design which is compatible with nearby buildings and structures and does not adversely impact on the amenity of adjoining properties, the streetscape or landscape setting; (b) do not create visual clutter; (2) The number of communications structures is appropriate to the use; (3) Communications structures are co-located where possible.	**P1.**	(1) The communications structure - (a) has a maximum diameter of - (i) 1.2 metres in the Emerging Urban Community Zone, Low Density Residential Zone, Medium Density Residential Zone, Park Residential Zone, Point Lookout Residential Zone, SMBI Residential Zone or Urban Residential Zone; or (ii) 2 metres in all other zones; (b) has a maximum height of - (i) 10 metres above ground level when it is detached from a building or structure; or (ii) 3.5 metres above the building or structure when attached; (c) is located within a development envelope; or (d) is located behind the front building line; (e) is setback from side and rear boundaries of the lot or premises - (i) where the height, above ground level, of the communications structure is - a. less than 4.5 metres - a minimum of 1.5 metres; or b. between 4.5 metres and 7.5 metres - a minimum of 2 metres; or c. less than 7.5 metres and it is located on a lot with a frontage of less than 15 metres - is in accordance with Table 1; or d. is more than 7.5 metres - a minimum of 2 metres, plus 0.5 metres for every 3 metres or part thereof by which the height of the communications structure exceeds 7.5 metres above ground level; (2) Communications structures are

Assessable Development			
Specific Outcomes		Probable Solutions	
			limited to - (a) where on, or in conjunction with, a dwelling unit - a maximum of two on each lot or premises; or (b) where in conjunction with any other use - no probable solution identified; (3) Where the use requires more than one communications structure they are co-located on a single structure or in the immediate vicinity of each other.

Table 1 - Narrow Lot Minimum Side and Rear Boundary Setbacks

Lot Frontage (metres)	Side and Rear Setbacks (metres)	
	Height of Communications Structure	
	4.5 metres or less	4.5 to 7.5 metres
14.5 - 15	1.425	1.9
14 - 14.5	1.35	1.8
13.5 - 14	1.275	1.7
13 - 13.5	1.2	1.6
12.5 - 13	1.125	1.5
12 - 12.5	1.05	1.4
11.5 - 12	0.975	1.3
11 - 11.5	0.9	1.2
10.5 - 11	0.825	1.1
10.5 or less	0.75	1

-Division 3 - Domestic Additions

7.3.1 Introduction

(1) This division contains the provisions for the Domestic Additions Code, that incorporates –

(a) *Building Act, 1975* (as amended) Alternative Provisions to Queensland Development Code MP1.1 and MP1.2 (section 7.3.2);

(b) Compliance with the Domestic Additions Code (section 7.3.3);

(c) Overall Outcomes of the Domestic Additions Code (section 7.3.4);

(d) Acceptable Solutions applicable to Self-Assessable Development (section 7.3.5);

(e) Specific Outcomes and Probable Solutions applicable to Assessable Development (section 7.3.6).

7.3.2 Building Act, 1975 (as amended) Alternative Provisions to Queensland Development Code MP1.1 and MP1.2

(1) The provisions of the *Queensland Development Code* (QDC) MP1.1 and MP1.2 apply to the development. To the extent that the Domestic Additions Code conflicts with a provision in QDC MP1.1 and MP1.2, the Domestic Additions Code prevails. The Domestic Additions Code also contains specific outcomes and probable solutions that are nominated as -

(a) *Building Act, 1975* (as amended) "Alternative Provisions" to QDC MP1.1 and MP1.2;
(b) Building Assessment Provisions for the purpose of section 10 of the *Building Regulation, 2006.*

Note -

This code nominates some alternative planning scheme provisions to the QDC in respect of setbacks, site cover and built to boundary walls. The access and parking provision has been nominated as Building Assessment Provisions for the purpose of Section 10 of the *Building Regulation 2006.*

Non compliance with <u>only</u> the acceptable solutions for self assessable development in relation to setbacks, site cover, built to boundary walls and access and parking will not elevate the level of assessment of a proposal from the self assessable development to assessable development under the Redlands Planning Scheme. In these instances, the local government will undertake the functions of a referral agency with Concurrence Agency jurisdiction under IPA to assess and determine these matters.

For example, if the proposal complies with the acceptable solutions for self assessable development in every respect <u>except</u> for a side boundary setback only, the matter of non compliance would be referred to Council for a referral agency considerations and response in accordance with the *Building Act, 1975* (as amended) and will not require a development application.

(2) The following provisions are *Building Act, 1975* (as amended) "Alternative provisions" –

(a) S3(1) and P3(1);
(b) S4(1) and P4(1) and (2);
(c) S5(1) and P5(1);

(3) The following provisions are Building Assessment Provisions for the purpose of section 10 of the *Building Regulation, 2006* -

(a) S6 and P6;

7.3.3 Compliance with the Domestic Additions Code

(1) Development that is consistent with the following complies with the Domestic Additions Code -

(a) acceptable solutions in section 7.3.4 where self-assessable development; or

(b) specific outcomes in section 7.3.5 where assessable development.

7.3.4 Overall Outcomes of the Domestic Additions Code

(1) The overall outcomes are the purpose of the Domestic Additions Code.

(2) The overall outcome sought for the Domestic Additions Code is the following -

(a) to ensure domestic additions -

(i) are compatible with the character of existing buildings and structures on the lot or premises;

(ii) positively contribute to an attractive streetscape or landscape setting;

(iii) do not adversely impact on the amenity of adjoining premises.

7.3.5 Acceptable Solutions applicable to Self-Assessable Development

Self-Assessable Development	
Acceptable Solutions	
A1.	(1) The domestic addition is proposed on a lot or premises with an existing dwelling house or small lot house; (2) The building height does not exceed - (a) a maximum building height of 8.5 metres above ground level; (b) 2 storey; (3) The domestic addition setbacks from the front, side and rear boundaries complies with Table 1 – Maximum Site Coverage and Minimum Setbacks; (4) The domestic addition site cover - (a) Complies with the site cover provisions outlined in Table 1 – Maximum Site Coverage and Minimum Setbacks; (b) Does not exceed 36m^2 gross floor area in the SMBI Residential Zone; or (c) Does not exceed 36m^2 gross floor area where providing the mandatory covered car accommodation. (5) Built to boundary walls comply with QDC MP1.1 and MP1.2; **Note -** Built to boundary walls are intended for non-habitable rooms as detailed in the QDC MP1.1 and MP1.2. (6) The number of on-site car parking spaces complies with Part 9 - Schedule 1 - Access and Parking, Table 1 - Minimum On-Site Vehicle Parking Requirements; (7) Domestic additions are setback from on-site wastewater management systems a minimum of - (a) for sub-surface land application systems that are on level land and down slopes - 2 metres; or (b) for sub-surface land application systems on up slopes - 4 metres; or (c) for surface irrigation land application systems in association with secondary treated effluent - 15 metres; or (d) for surface irrigation land application system in association with advanced secondary treated effluent - 10 metres.

7.3.6 Specific Outcomes and Probable Solutions applicable to Assessable Development

Assessable Development			
Specific Outcomes		**Probable Solutions**	
S1.	Location - The domestic addition is proposed on a lot or premises that contains a dwelling house or small lot house.	**P1.**	No probable solution is identified
S2.	Building Height - Building height maintains the predominant height expected in the zone in which it is located.	**P2.**	No probable solution identified. **Note -** Refer to relevant zone code for building height requirements.
S3.	Boundary Setbacks - (1) The domestic addition enhances built form of the surrounding streetscape by – (a) complements the existing streetscape where visible from the street; (b) ensuring the development is compatible with the surrounding built form; (c) ensuring the development is sited to prevent nuisance or threat to public safety. ***(Building Act, 1975 Alternative Provision to QDC MP1.1 and MP1.2, P1 and P2)***	**P3.**	(1) The domestic addition – (a) Domestic setbacks from front, side and rear boundaries complies with – (i) Where the relevant zone is listed in Table 1 – Maximum Site Coverage and Minimum Setbacks – the requirements of the table; or (ii) For all other Zones – the relevant zone code. ***(Building Act, 1975 Alternative Provision to QDC MP1.1 and MP1.2, A1 and A2)***
S4.	Site Cover - (1) The domestic addition ensures adequate open space is provided on the lot or premises for recreation, service facilities and landscaping. ***(Building Act 1975 Alternative Provision to QDC MP1.1 and MP1.2 P3)***	**P4.**	(1) The domestic addition - (a) Maximum site cover complies with - (i) Where the relevant zone is listed in Table 1 – Maximum Sire Coverage and Minimum Setbacks – the requirement of the table; or (ii) For all other zones – the relevant zone code. ***(Building Act 1975 Alternative Provision to QDC MP1.1 and MP1.2 P3)***
S5.	Built to Boundary Walls - (1) Built to boundary walls are designed to minimise impact on	**P5.**	(1) Built to boundary walls for Urban Residential (including sub-area

Assessable Development			
Specific Outcomes		**Probable Solutions**	
	the amenity and privacy of residents of adjoining dwellings. ***(Building Act, 1975 Alternative Provision to QDC MP1.1 and MP1.2, P2)***		UR2) and Medium Density Residential areas - (a) is a maximum of 15 metres in total length with a maximum length of 9 metres without articulation; (b) has no windows or doors to the boundary; (c) is an average height of 3.5 metres; (d) is a maximum height of 4.5 metres. ***(Building Act, 1975 Alternative Provision to QDC MP1.1 and MP1.2, P2)***
S6.	Access and Parking - The domestic addition maintains a sufficient number of car parking spaces to cater for resident and visitor parking. ***(Building Assessment Provisions for the purpose of section 10 of the Building Regulation 2006)***	**P6.**	The number of on-site car parking spaces complies with Part 9 – Schedule 1 – Access and Parking Table 1 – Minimum On-site Vehicle Parking Requirements. ***(Building Assessment Provisions for the purpose of section 10 of the Building Regulation 2006)***
S7.	Amenity - (1) The domestic addition - (a) is compatible with existing buildings and structures on the lot or premises, including- (i) materials; (ii) roof pitch; (iii) colours.	**P7.**	No probable solution is identified.
S8.	Solar Access - (1) The development is designed to ensure that habitable rooms and private open space of adjoining dwellings units have sufficient access to daylight and sunlight at all times of the years.	**P8.**	(1) The domestic addition complies with the following requirements – (a) Solar access to habitable rooms and private open space of adjoining dwelling units – (i) Is not reduced to less than 3 hours between 9am and 3pm on June 21; or (ii) Where existing overshadowing by building and fences is greater than this, sunlight is not further reduced by more than 20 percent.

Assessable Development			
Specific Outcomes		Probable Solutions	
	On-Site Wastewater Management -		
S9.	(1) The location of the domestic addition does not affect the operation of an on-site wastewater management system.	**P9.**	(1) Domestic additions are setback from on-site wastewater management systems a minimum of - (a) for sub-surface land application systems that are on level land and down slopes - 2 metres; or (b) for sub-surface land application systems on up slopes - 4 metres; or (c) for surface irrigation land application systems in association with secondary treated effluent - 15 metres; or (d) for surface irrigation land application system in association with advanced secondary treated effluent - 10 metres.

Table 1 - Maximum Site Coverage and Minimum Setbacks

Zone	Maximum Site Coverage	Minimum Setbacks
■ Conservation ■ Emerging Urban Community ■ Environmental Protection ■ Investigation	For the purposes of the domestic addition, site coverage of buildings and structures does not exceed 1000m^2.	(1) For lots that are less than 2 hectares in area, front, side and rear setbacks are 10 metres; or (2) For lots that are 2 hectares or greater in area, front, side and rear setbacks are - (a) 20 metres; or (b) 10 metres where screened by planted landscaping; (3) Sited wholly within a development envelope area, where applicable.
■ Park Residential	30 percent	
■ Rural Non-Urban	2.5 percent	
■ Local Centre	75 percent	(1) No front setback requirement; (2) Side and rear setbacks - (a) where the lot or premises is adjoining a residential zone - 3 metres or half the height of the building at that point; or (b) in all other cases - no requirement.
■ Low Density Residential	30 percent	(1) The Queensland Development Code – (a) MP1.1, A1(a) and (b), A2(a) and (b) applies for lots under 450m^2; or (b) MP1.2, A1(a) and (b), A2(a) and (b) applies for lots 450m^2 and over.
■ Medium Density Residential ■ Urban Residential - excluding sub-area UR2	50 percent	
■ Urban Residential - sub-area UR2	40 percent	

Table 2 - Narrow Lot Minimum Side and Rear Boundary Setbacks

Lot Frontage (metres)	Side and Rear Setbacks (metres)	
	Height of Building	
	4.5 metres or less	4.5 to 7.5 metres
14.5 - 15	1.425	1.9
14 - 14.5	1.35	1.8
13.5 - 14	1.275	1.7
13 - 13.5	1.2	1.6
12.5 - 13	1.125	1.5
12 - 12.5	1.05	1.4
11.5 - 12	0.975	1.3
11 - 11.5	0.9	1.2
10.5 - 11	0.825	1.1
10.5 or less	0.75	1

Division 4 - Domestic Driveway Crossover

7.4.1 Introduction

(1) This division contains the provisions for the Domestic Driveway Crossover Code, that incorporates -

(a) Compliance with the Domestic Driveway Crossover Code (section 7.4.2);

(b) Overall Outcomes of the Domestic Driveway Crossover Code (section 7.4.3);

(c) Acceptable Solutions applicable to Self-Assessable Development (section 7.4.4);

(d) Specific Outcomes and Probable Solutions applicable to Assessable Development (section 7.4.5).

7.4.2 Compliance with the Domestic Driveway Crossover Code

(1) Development that is consistent with the following complies with the Domestic Driveway Crossover Code -

(a) acceptable solutions in section 7.4.4 where self-assessable development; or

(b) specific outcomes in section 7.4.5 where assessable development.

7.4.3 Overall Outcomes of the Domestic Driveway Crossover Code

(1) The overall outcomes are the purpose of the Domestic Driveway Crossover Code.

(2) The overall outcome sought for the Domestic Driveway Crossover Code is the following -

(a) to ensure the domestic driveway crossover -

(i) provides safe access from the edge of a road carriageway to the property boundary of lots where the use of the premises is either a dwelling house, dual occupancy or small lot house;

(ii) are sited and constructed to not adversely impact on utility infrastructure;

(iii) are constructed so that stormwater flows along the kerb and channel, drainage pipe or drainage swale are not diverted into private properties;

(iv) facilitates pedestrian and cycle access by conforming to the footpath or verge profile.

7.4.4 Acceptable Solutions applicable to Self-Assessable Development

Self-Assessable Development	
Acceptable Solutions	
A1.	(1) The domestic driveway crossover provides access to a dwelling house, dual occupancy or a small lot house; (2) Only one crossover is provided per street frontage; (3) Where the lot or premises is fronted by a road with - (a) kerb and channel, the crossover is designed, sited and constructed in accordance with Standard Drawing R-RSC-2 - Domestic Driveway Crossover for Kerb and Channel with the crossover width not exceeding 6 metres; or (b) a drainage pipe, the crossover is designed, sited and constructed in accordance with Standard Drawing R-RSC-16 - Domestic Driveway Crossover for Pipe Crossing; or (c) a drainage swale, the crossover is designed, sited and constructed in accordance with Standard Drawing R-RSC-17 - Domestic Driveway Crossover for Drainage Swale. **Note -** During construction, allowing sediment to access a waterway or stormwater system, or placing sediment in a place where it may access a waterway or stormwater system is a breach of the *Environmental Protection (Water) Policy 1997*.

Note -

Refer to Planning Scheme Policy 9 - Infrastructure Work for standard drawings

Specific Outcomes and Probable Solutions applicable to Assessable Development

Assessable Development			
Specific Outcomes		**Probable Solutions**	
S1.	(1) The domestic driveway crossover - (a) is suitable for vehicular access consistent with the domestic use of the lot or premises; (b) does not adversely impact on streetscape amenity and existing or proposed street trees; (c) maintains a level footpath or verge profile for pedestrian and cyclist movement; (d) does not damage or interfere with the location, function, maintenance or access to utility infrastructure; (e) allows for the uninterrupted flow of stormwater run-off along the - (i) kerb and channel; or (ii) drainage pipe; or (iii) drainage swale.	**P1.**	(1) The domestic driveway crossover - (a) serves a dwelling house, dual occupancy or small lot house; (b) is limited to one crossover per street frontage; (c) splays and tapers do not protrude over adjoining property boundaries at any point within the verge; (d) does not result in the removal or damage to existing street trees; (e) is not located where it will conflict with proposed street trees; (f) is of a slope that results in a continuous even surface along the verge or constructed footpath; (g) is finished in a non-slip surface that is of a colour and design that compliments the streetscape; (h) has no impact on above or below ground utility infrastructure, including electrical service pillars; (i) where the lot or premises is fronted by a road with - (i) kerb and channel, the crossover is designed, sited and constructed in accordance with Standard Drawing R-RSC-2 - Domestic Driveway Crossover for Kerb and Channel with the crossover not exceeding 6 metres; or (ii) a drainage pipe, the crossover is designed, sited and constructed in accordance with Standard Drawing R-RSC-16 - Domestic Driveway Crossover for Pipe Crossing; or (iii) a drainage swale, the crossover is designed, sited and constructed in accordance with Standard Drawing R-RSC-17 - Domestic Driveway Crossover for Drainage Swale.

this page purposely
left blank

Division 5 - Domestic Outbuilding

7.5.1 Introduction

(1) This division contains the provisions for the Domestic Outbuilding Code, that incorporates –

(a) *Building Act, 1975* (as amended) Alternative Provisions to Queensland Development Code MP1.1 and MP1.2 (section 7.5.2);

(b) Compliance with the Domestic Outbuilding Code (section 7.5.3);

(c) Overall Outcomes of the Domestic Outbuilding Code (section 7.5.4);

(d) Acceptable Solutions applicable to Self-Assessable Development (section 7.5.5);

(e) Specific Outcomes and Probable Solutions applicable to Assessable Development (section 7.5.6).

7.5.2 Building Act, 1975 (as amended) Alternative Provisions to Queensland Development Code MP1.1 and MP1.2

(1) The provisions of the *Queensland Development Code* (QDC) MP1.1 and MP1.2 apply to the development. To the extent that the Domestic Outbuilding Code conflicts with a provision in QDC MP1.1 and MP1.2, the Domestic Outbuilding Code prevails. The Domestic Outbuilding Code also contains specific outcomes and probable solutions that are nominated as *Building Act 1975* (as amended) "Alternative Provisions" to QDC MP1.1 and MP1.2, and these provisions prevail over the QDC MP1.1 and MP1.2 provisions.

Note -

This code nominates some alternative planning scheme provisions to the QDC in respect of setbacks.

Non compliance with <u>only</u> the acceptable solutions for self assessable development in relation to setbacks, or nominated "Alternative Provisions" will not elevate the level of assessment of a proposal from self assessable development to assessable development under the Redlands Planning Scheme. In these instances, the local government will undertake the functions of a referral agency with Concurrence Agency jurisdiction under IPA to assess and determine these matters.

For example, if the proposal complies with the acceptable solutions for self assessable development in every respect <u>except</u> for a side boundary setback only, the matter of non compliance would be referred to Council for a referral agency considerations and response in accordance with the *Building Act, 1975* (as amended) and will not require a development application.

(2) The following provisions are *Building Act, 1975* alternative provisions –

(a) S4.1(1) and P4.1(1);

7.5.3 Compliance with the Domestic Outbuilding Code

(1) Development that is consistent with the following complies with the Domestic Outbuilding Code -

(a) acceptable solutions in section 7.5.4 where self-assessable development; or

(b) specific outcomes in section 7.5.5 where assessable development.

7.5.4 Overall Outcomes of the Domestic Outbuilding Code

(1) The overall outcomes are the purpose of the Domestic Outbuilding Code.

(2) The overall outcome sought for the Domestic Outbuilding Code is the following -

(a) to ensure the domestic outbuilding is -

(i) sited and of a scale and construction that respects the amenity of adjoining properties by preserving solar access to living areas and private open space;

(ii) not dominant when viewed from any public place including the street, and is proportionate to and visually compatible with the residential setting.

Note -

Domestic outbuildings include garden sheds, open carports and enclosed garages.

7.5.5 Acceptable Solutions applicable to Self-Assessable Development

Self-Assessable Development	
Acceptable Solutions	
A1.	(1) The domestic outbuilding is located on a lot that contains a dwelling house or small lot house; (2) The domestic outbuilding complies with - (a) Table 1 - Criteria for Domestic Outbuildings by Lot Size Category; (b) in the SMBI Residential Zone, 36m^2 maximum gross floor are; (c) where more than one domestic outbuilding will be on the lot, the combined gross floor area of all domestic outbuildings does not exceed the gross floor area criteria for the applicable lot size category specified in Table 1 - Criteria for Domestic Outbuildings by Lot Size Category; (3) The domestic outbuilding does not result in total site coverage exceeding - (a) in the Low Density Residential Zone or Park Residential Zone - 30 percent; or (b) in the Medium Density Residential Zone or Urban Residential Zone, excluding sub-area UR2 - 50 percent; or (c) in the Urban Residential Zone sub-area UR2 - 40 percent; or (d) in the SMBI Residential Zone - 30 percent; or (e) in other zones - site coverage is governed by the size of the domestic outbuilding as detailed in A1.(2). ***(Building Act, 1975 (as amended) Alternative Provision to QDC MP1.1 or MP1.2, P3 A3 and A2)*** (4) The domestic outbuilding is located in accordance with Table 2 - Minimum Setbacks for Domestic Outbuildings.

7.5.6 Specific Outcomes and Probable Solutions applicable to Assessable Development

Assessable Development			
Specific Outcomes		**Probable Solutions**	
S1.1	The domestic outbuilding is ancillary to a dwelling house or small lot house on the same lot.	**P1.1**	No probable solution identified. **Note -** Where the domestic outbuilding is proposed to be sited on a different lot to the dwelling unit, the local government may require amalgamation of the lots.
S2.1	(1) The domestic outbuilding does not adversely impact on adjoining properties through reduction in existing solar access.	**P2.1**	(1) Access to sunlight of neighbouring property habitable rooms and private open space - (a) is not reduced to less than 3 hours between 9am and 3pm on June 21; or (b) where existing overshadowing by building and fences is greater than this, sunlight is not further reduced by more than 20 percent;
S3.1	(1) Domestic outbuilding design is compatible with development on the lot including - (a) materials; (b) roof pitch; (c) colours; (2) The size and height of the domestic outbuilding - (a) is proportionate to the size of the lot and to existing buildings on the lot; (b) complements the streetscape.	**P3.1**	(1) No probable solution identified; (2) The domestic outbuilding overall size and height - (a) complies with -Table 1 - Criteria for Domestic Outbuildings by Lot Size Category; (b) where more than one domestic outbuilding will be on the lot - the combined gross floor area of all domestic outbuildings does not exceed the gross floor area specified in Table 1; (c) does not cause total site coverage to exceed that specified in the zone code;
S4.1	(1) The location of the domestic outbuilding is compatible with anticipated setbacks for the zone. ***(Building Act, 1975 Alternative Provision to QDC MP1.1 and MP1.2, P1 and P2)***	**P4.1**	(1) The domestic outbuilding is sited to comply with Table 2 – Minimum Setbacks for Domestic Outbuildings for the relevant zone. ***(Building Act, 1975 Alternative Provision to QDC MP1.1 and MP1.2, A1 and A2)***

Table 1 - Criteria for Domestic Outbuildings by Lot Size Category

Lot Size	Maximum Gross Floor Area	Overall Height[1]	Wall Height[2]	Opening to Street Frontage
Less than 500m^2	25m^2	3 metres	2.4 metres	6 metres
500m^2 - 850m^2	45m^2	3.5 metres	2.7 metres	6 metres
850m^2 - 2,000^2	60m^2	3.5 metres	2.7 metres	6 metres
2000m^2 - 15,000m^2	80m^2	4.5 metres	3.5 metres	10 metres
Greater than 15,000m^2	150m^2	4.5 metres	3.5 metres	10 metres

Note 1 - Overall height above ground level.
Note 2 - Wall height measured from ground level to pitching line.

Table 2 - Minimum Setbacks for Domestic Outbuildings

Zone	Minimum Setbacks	
■ Conservation ■ Emerging Urban Community ■ Environmental Protection ■ Investigation ■ Park Residential ■ Rural Non-Urban	(1) For lots that are less than 2 hectares in area, front, side and rear setback are 10 metres; or (2) For lots that are 2 hectares or greater in area, front, side and rear setbacks are - (a) 20 metres; or (b) 10 metres where screened by planted landscaping; or (3) Sited wholly within a development envelope area, where applicable	
■ Local Centre	(1) No front setback requirement; (2) Side and rear setbacks - (a) where the lot or premises is adjoining a residential zone - 3 metres or half the height of the building at that point; or (b) in all other cases - no requirement	
■ Low Density Residential ■ Medium Density Residential ■ Urban Residential	**When enclosed -**	**When an open carport -**
	(1) Front setback - (a) the domestic outbuilding is located behind the front building line; (2) Side, rear and corner setbacks as per the Queensland Development Code – (a) Part 11, A1 and A2; or (b) Part 12, A1 and A2.	(1) Front setback - (a) the domestic outbuilding is located behind the front building line; or (b) where forward of the front building line, is setback a minimum of 3 metres from the front boundary - refer to Diagram 3.

Table 3 - Minimum Side and Rear Boundary Setbacks for Self-Assessable Domestic Outbuildings

Lot Frontage (metres)	Side and Rear Setbacks (metres)
14.5 - 15	1.425
14 - 14.5	1.35
13.5 - 14	1.275
13 - 13.5	1.2
12.5 - 13	1.125
12 - 12.5	1.05
11.5 - 12	0.975
11 - 11.5	0.9
10.5 - 11	0.825
10.5 or less	0.75

Diagram 1 - Detached domestic outbuilding behind front building line

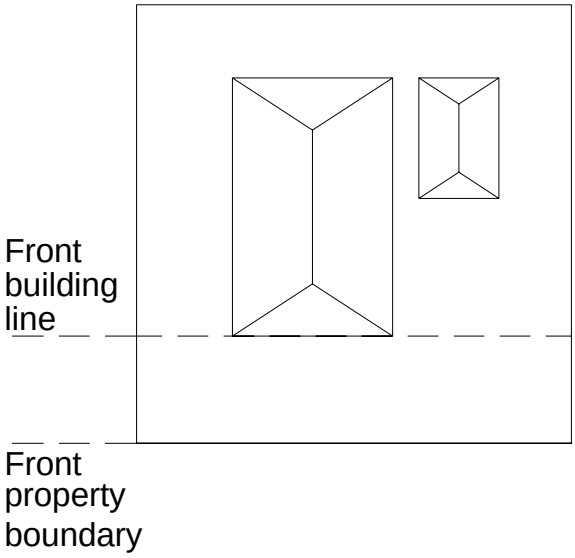

Diagram 2 - Attached domestic outbuilding behind front building line

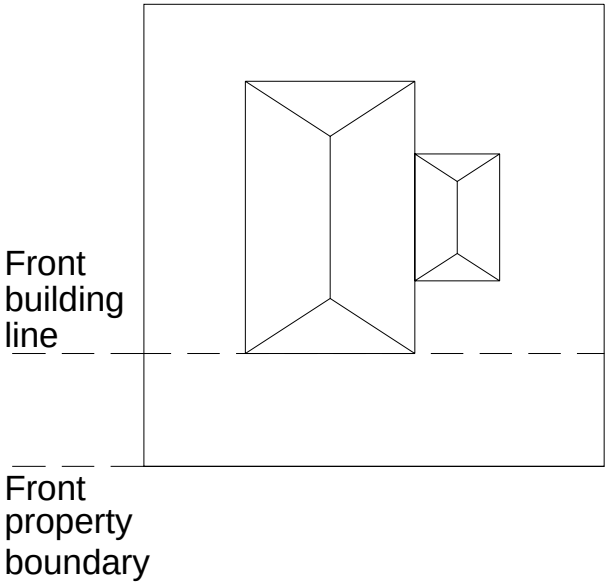

Diagram 3 - Open carport outbuilding forward of the front building line

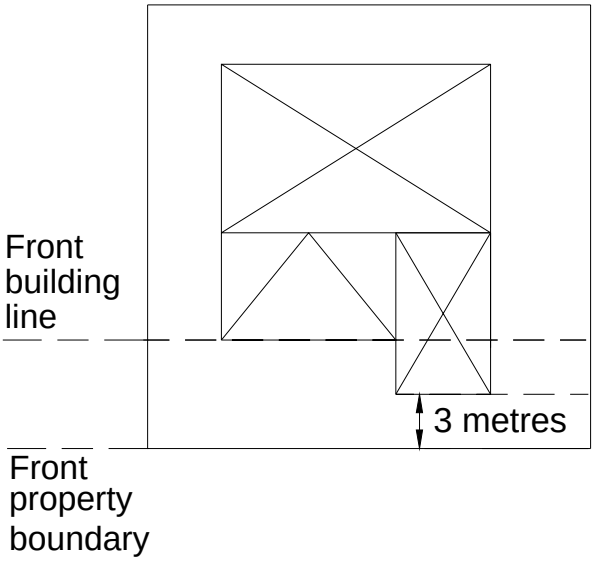

this page purposely
left blank

Division 6 - Excavation and Fill

7.6.1 Introduction

(1) This division contains the provisions for the Excavation and Fill Code, that incorporates -

(a) Compliance with the Excavation and Fill Code (section 7.6.2);

(b) Overall Outcomes of the Excavation and Fill Code (section 7.6.3);

(c) Acceptable Solutions applicable to Self-Assessable Development (section 7.6.4);

(d) Specific Outcomes and Probable Solutions applicable to Assessable Development (section 7.6.5).

7.6.2 Compliance with the Excavation and Fill Code

(1) Development that is consistent with the following complies with the Excavation and Fill Code -

(a) acceptable solutions in section 7.6.4 where self-assessable development; or

(b) specific outcomes in section 7.6.5 where assessable development.

Note -

Planning Scheme Policy 9 - Infrastructure Works will assist in achieving specific outcomes within the Excavation and Fill Code.

7.6.3 Overall Outcomes of the Excavation and Fill Code

(1) The overall outcomes are the purpose of the Excavation and Fill Code.

(2) The overall outcome sought for the Excavation and Fill Code is the following -

(a) to ensure excavation and fill -

(i) does not adversely affect the character and amenity of the site and the surrounding area;

(ii) is minimised to protect environmental values, native plants and natural drainage systems;

(iii) protects the safety of people and property.

7.6.4 Acceptable Solutions applicable to Self-Assessable Development

Self-Assessable Development	
Acceptable Solutions	
A1.	(1) Excavation or fill does not exceed - (a) 1 metre in depth from ground level, for the purpose of or incidental to building work; or (b) 300mm in depth for operational works; (c) 600m^2 in area for building or operational works; (d) operational works does not involve the removal of native plants of a height greater than 2 metres. **Notes -** ■ See Part 9 - Schedule 3 - Dictionary, Division 2 - Administrative Terms for a definition of - ▸ excavation and fill; ▸ ground level; ■ Where the development requires the 'disturbance of soil' within a fire ant 'restricted area', a risk management plan is approved by the Department of Primary Industries; ■ High risk soil disturbance activities include, but are not limited to - ▸ filling or excavation of a minor or major scale; ▸ import of fill onto a site; ▸ export of fill or other materials, such as soil, gravel, mulch and plants; ▸ export off or import onto a site of construction and demolition waste and materials, or greenwaste/timber/fuel containing soil.

7.6.5 Specific Outcomes and Probable Solutions applicable to Assessable Development

Assessable Development			
Specific Outcomes		**Probable Solutions**	
S1.	(1) Excavation and fill - (a) does not reduce the amenity of adjoining properties through the - (i) loss of solar access or privacy; (ii) intrusion of negative visual or overbearing impacts; (iii) ensuring retaining structures - a. are constructed of materials that are of a high quality appearance; b. incorporate landscaping or other features to assist reducing their visual bulk and length; (b) is minimised by development being located and designed to - (i) prevent the unnecessary removal of native plants; (ii) protect existing and natural overland drainage systems; (iii) reduce erosion and sediment run-off; (c) protects the safety of people and property from - (i) drainage impacts such as the ponding or concentration of run-off or alteration of existing drainage systems; (ii) impacts associated with unstable fill; (iii) sub-standard retaining structures by ensuring - a. construction materials are durable; b. the structural strength of the walls is sufficient to support the works.	**P1.**	(1) Excavation and fill - (a) maintains the amenity of adjoining properties by - (i) for operational works - a. not exceeding a combined depth of 750mm; b. not exceeding an area of 1 hectare; or (ii) for building work - complies with Table 1; (iii) ensuring retaining walls or structures - a. are setback at least half the height of the wall from any boundary of the site; b. do not exceed 1 metre in height; c. are stepped or terraced to incorporate landscaping; (b) protects the safety of people and property by - (i) where involving gradients or embankments comply with Schedule 5, Division 5 of the *Standard Building Regulation 1993*; (ii) ensuring retaining walls or structures - a. are designed in accordance with Section 3 of *Australian Standard 4678:2002 - Earth Retaining Structures*; b. have a design life of not less than 60 years; c. for reconfiguration operational works do not include timber materials; (iii) ensuring compaction is carried out in accordance with - a. *Australian Standard 3798:1996 - Guidelines on earthworks for commercial and residential* developments; b. *Australian Standard 2870:1996 - Residential slabs and footings - construction*.

Assessable Development			
Specific Outcomes		**Probable Solutions**	
S2.	(1) Excavation and fill does not result in land or water contamination, or the harbourage of vermin. **Note -** ■ Where the development requires the 'disturbance of soil' within a fire ant 'restricted area', a Risk Management Plan is approved by the Department of Primary Industries. ■ High risk soil disturbance activities include, but are not limited to - ▸ excavation or fill of a minor or major scale; ▸ import of fill onto a site; ▸ export of fill or other materials, such as soil, gravel, mulch and plants; ▸ export off or import onto a site of construction and demolition waste and materials, or greenwaste/timber/fuel containing soil.	**P2.**	(1) Excavation and fill prevent land or water contamination, or the harbourage of vermin by ensuring - (a) the controlled use of clean, dry, solid, inert building material as per section 4 of *Australian Standard 3798:1996 - Guidelines on earthworks for commercial and residential developments*; (b) where the site contains contaminated material, the removal of contaminated material is disposed to an approved landfill under the conditions of a disposal permit issued under the *Environmental Protection Act 1994*. **Note -** To assist in achieving the specific outcome check with the Environmental Protection Agency if the lot or premises is on the Contaminated Land Register or Environmental Management Register.
S3.	(1) Excavation and fill does not cause environmental nuisance due to - (a) hours of construction; (b) dust emissions; (c) truck movements. **Note -** To assist in achieving the specific outcome applicants will be required to demonstrate the site will be managed throughout the period of excavation or fill and will incorporate all necessary mechanisms to minimise environmental nuisance.	**P3.**	(1) Excavation and fill works minimise environmental nuisance by - (a) limiting hours of construction are Monday to Friday from 7.00am to 6.00pm and Saturday from 7.00am to 1.00pm; (b) ensuring areas of disturbance on site, including accessways, are watered to limit dust associated with construction and vehicle movements; (c) ensuring public roads are kept free of dust and any spoil from trucks.

Table 1 - Area and Depth of Excavation and Fill by Zone where associated with Building Works

Zone	Building Work		
	Within the footprint of the building	Outside the footprint of the building	
	Maximum Depth	Maximum Area	Maximum Depth
■ Medium Density - including sub-areas MDR1, MDR2 and MDR3 ■ Urban Residential - excluding sub-areas UR2 and UR3; or	As per *Standard Building Regulation 1993*	(1) 600m^2; or (2) 60 percent of the site, whichever is the lesser	(1) 750mm
■ Point Lookout Residential; ■ SMBI Residential - including sub-area SR1	As per *Standard Building Regulation 1993*	(1) 25m^2 for a dwelling house, or (2) 12m^2 per dwelling unit for other types of housing	(1) 1.2 metres where for internal driveway, car parking platform, private open space, BBQ areas and clothes drying areas, or (2) 750mm
■ Conservation - excluding sub-areas CN1 and CN2; ■ Environmental Protection; ■ Emerging Urban Community - including sub-area EUC1; ■ Investigation Zone; ■ Island Industry - sub-area IS1 ■ Local Centre - sub-area LC1; ■ Low Density Residential; ■ Park Residential; ■ Point Lookout Tourist - including all sub-areas; ■ Point Lookout Centre; ■ Rural Non-Urban - excluding sub-areas RN1 and RN2; ■ SMBI Centre - including sub-area SC1 ■ Urban Residential - including sub-area UR2 and UR3;	As per *Standard Building Regulation 1993*	(1) 100m^2	(1) 750mm
■ Major Centre - including all sub-areas; ■ District Centre; ■ Neighbourhood Centre - including all sub-areas; ■ Local Centre - excluding LC1; ■ General Industry - including sub-area GL1; ■ Commercial Industry - including sub-area CM1; ■ Marine Activity - including all sub-areas; ■ Community Purposes - including all sub-areas; ■ Open Space; ■ Rural Non-Urban - excluding sub-area RN3	As per *Standard Building Regulation 1993*	Determined on the merits of the proposal	
■ Conservation - including sub-areas CN1 and CN2	Highly restricted and determined on the merits of the proposal		

this page purposely
left blank

Division 7 - On-Site Raising or Relocation

7.7.1 Introduction

(1) This division contains the provisions for the On-Site Raising or Relocation Code, that incorporates -

(a) *Building Act, 1975* (as amended) Alternative Provision to Queensland Development Code MP1.1 and MP1.2 (section 7.7.2)

(b) Compliance with the On-Site Raising or Relocation Code (section 7.7.3)

(c) Overall Outcomes of the On-Site Raising or Relocation Code (section 7.7.4);

(d) Acceptable Solutions applicable to Self-Assessable Development (section 7.7.5);

(e) Specific Outcomes and Probable Solutions applicable to Assessable Development (section 7.7.6).

7.7.2 Building Act, 1975 (as amended) Alternative Provision to Queensland Development Code MP1.1 and MP1.2

(1) The provisions of the *Queensland Development Code* (QDC) MP1.1 and MP1.2 apply to the development. To the extent that the On-site Raising and Relocation Code conflicts with a provision in QDC MP1.1 and MP1.2, On-site Raising and Relocation Code prevails. The On-site Raising and Relocation Code also contains specific outcomes and probable solutions that are nominated as -

(a) *Building Act 1975* (as amended) "Alternative Provisions" to QDC MP1.2
(b) Building Assessment Provisions for the purpose of Section 10 of the *Building Regulation, 2006*.

Note -

This code nominates some alternative planning scheme provisions to the QDC in respect of setbacks, site cover and built to boundary walls. The access and parking and the visual privacy provisions have been nominated as Building Assessment Provisions for the purpose of Section 10 of the *Building Regulation 2006.*

Non compliance with <u>only</u> the acceptable solutions for self assessable development in relation to setbacks, site cover, built to boundary walls, access and parking and visual privacy will not elevate the level of assessment of a proposal from self assessable development to assessable development under the Redlands Planning Scheme. In these instances, the local government will undertake the functions of a referral agency with Concurrence Agency jurisdiction under IPA to assess and determine these matters.

For example, if the proposal complies with the acceptable solutions for self assessable development in every respect <u>except</u> for a side boundary setback only, the matter of non compliance would be referred to Council for a referral agency considerations and response in accordance with the *Building Act, 1975* (as amended) and will not require a development application.

(2) The following provisions are *Building Act, 1975* (as amended) alternative provisions –

(a) S3(1) and P3(1);
(b) S4 and P4;
(c) S5(1) and P5(1);

(3) The following provisions are Building Assessment Provisions for the purpose of section 10 of the *Building Regulation, 2006* -

(a) S6 and P6;
(b) S7(1) and P7(1).

7.7.3 Compliance with the On-Site Raising or Relocation Code

(1) Development that is consistent with the following complies with the On-Site Raising and Relocation Code -

(a) acceptable solutions in section 7.7.4 where self-assessable development; or

(b) specific outcomes in section 7.7.5 where assessable development.

7.7.4 Overall Outcomes of the On-Site Raising or Relocation Code

(1) The overall outcomes are the purpose of the On-Site Raising or Relocation Code.

(2) The overall outcome sought for the On-Site Raising or Relocation Code is the following -

(a) to ensure dwelling units -

(i) are raised to a level that is consistent with the character of dwelling units on adjoining premises;

(ii) where relocated, do not adversely impact on the amenity of the streetscape or adjoining premises.

7.7.5 Acceptable Solutions applicable to Self-Assessable Development

Self-Assessable Development	
Acceptable Solutions	
	Note - Building work associated with the raised or relocated building may be subject to Part 7 - Division 3 - Domestic Additions Code.
A1.	(1) The on-site raising or relocation is proposed on a lot or premises that contains a dwelling house or small lot house; (2) If raising - building height does not exceed - (a) a maximum building height of 8.5 metres above ground level; (b) 2 storey; (3) If relocating, the building is setback from front, side and rear boundaries in accordance with Table 1 - Maximum Site Coverage and Minimum Setbacks; (4) If relocating, the building complies with the site cover provisions outlined in Table 1 - Maximum Site Coverage and Minimum Setbacks; (5) Built to boundary walls comply with QDC MP1.1 and MP1.2; **Note -** Built to boundary walls are intended for non-habitable rooms as detailed in the QDC MP1.1 and MP1.2. (6) The number of on-site car parking spaces complies with Part 9 - Schedule 1 - Access and Parking, Table 1 - Minimum On-Site Vehicle Parking Requirements; (7) Where it is proposed that windows or balconies are less than 1.5 metres to the side or rear boundary, privacy between dwelling units is protected by providing screens, sill heights or obscure glazing in accordance with the QDC MP1.1 and MP1.2 A5; **Note -** The effective location of windows and balconies to avoid overlooking is preferred to the use of screening devices. Where these are used, they should be integrated with the building design and have minimal negative affect on the resident's or neighbour's amenity. (8) Setback from on-site wastewater management systems a minimum – (a) for sub-surface land application systems on level land and down slopes - 2 metres; or (b) for sub-surface land application systems on up slopes - 4 metres; or (c) for surface irrigation land application systems in association with secondary treated effluent - 15 metres; or (d) for surface irrigation land application systems in association with advanced secondary treated effluent - 10 metres; (9) Where the building extends over 2 or more lots, it is not relocated onto a single lot with an area of less than 500m^2.

7.7.6 Specific Outcomes and Probable Solutions applicable to Assessable Development

Assessable Development			
Specific Outcomes		**Probable Solutions**	
	Note - ■ Where a proposal incorporates raising, Specific Outcomes S1, S2, S5 and S9 apply. ■ Where a proposal incorporates relocation, Specific Outcomes S1, S3, S4, S5, S7, S8 and S9 apply. ■ Where a proposal incorporates raising and relocation, all Specific Outcomes apply. ■ Building work associated with a raised or relocated building may be subject to Part 7 - Division 3 - Domestic Additions Code.		
S1.	Housed Lot - The on-site raising or relocation is proposed on a lot or premises that contains a dwelling house or small lot house;	**P1.**	No probable solution identified.
S2.	Raising - Building height maintains the predominant height expected in the zone in which it is located.	**P2.**	No probable solution identified. **Note -** Refer to relevant zone code for building height information.
S3.	Boundary Setbacks - (1) Design and layout of the development enhances built form of the surrounding streetscape by – (a) contributing to the establishment of an attractive streetscape in new areas; (b) ensuring the development is compatible with surrounding development; (c) ensuring the building size and bulk of the development does not create overbearing development for neighbouring dwellings and their open space; (d) ensuring the development addresses the street	**P3.**	(1) The relocated building - (a) is located within a development envelope; or (b) site coverage and setback from front, side and rear boundaries complies with - (i) where the relevant zone is listed in Table 1 - Maximum Site Coverage and Minimum Setbacks - complies with that table; or (ii) for all other zones - the relevant zone code; ***(Building Act, 1975 Alternative Provision to QDC MP1.1 and MP1.2, A1 and A2)***

Assessable Development			
Specific Outcomes		**Probable Solutions**	
	frontage; (e) ensuring the development is sited to prevent nuisance or threat to public safety. ***(Building Act, 1975 Alternative Provision to QDC MP1.1 and MP1.2, A1 and A2)***		
S4.	Site Cover – Design and layout of the use ensures adequate open space is provided for recreation, service facilities and landscaping. ***(Building Act, 1975 Alternative Provision to QDC MP1.1 and MP1.2, P3)***	**P4.**	The relocated building complies with the site cover provisions outlined in Table 1 – Maximum Site Coverage and Minimum Setbacks. ***(Building Act, 1975 Alternative Provision to QDC MP1.1 and MP1.2, A3)***
S5.	Built to Boundary – (1) Built to boundary walls are designed to - (a) minimise impact on the amenity and privacy of residents of adjoining dwellings. ***(Building Act, 1975 Alternative Provision to QDC MP1.1 and MP1.2, P2)***	**P5.**	(1) Built to boundary walls for Urban Residential (including sub-area UR2) and Medium Density Residential areas - (a) is a maximum of 15 metres in total length with a maximum length of 9 metres without articulation; (b) has no windows or doors to the boundary; (c) is an average height of 3.5 metres; (d) is a maximum height if 4.5 metres. ***(Building Act, 1975 Alternative Provision to QDC MP1.1 and MP1.2, A2)***
S6.	Access and Parking - The raising or relocating maintains a sufficient number of car parking spaces to cater for resident and visitor parking. ***(Building Assessment Provisions for the purpose of section 10 of the Building Regulation, 2006)***	**P6.**	The number of on-site car parking spaces complies with Part 9 – Schedule 1 – Access and Parking Table 1- Minimum On-Site Vehicle Parking Requirements. ***(Building Assessment Provisions for the purpose of section 10 of the Building Regulation, 2006)***
S7.	Privacy - (1) Privacy between dwelling units and adjoining sites is achieved by effective building design and the location of windows and open space areas to prevent	**P7.**	(1) Where it is proposed that windows or balconies are less than 1.5 metres to the side or rear boundary, privacy between dwelling units is protected by –

Assessable Development			
Specific Outcomes		**Probable Solutions**	
	overlooking in habitable rooms or private open space areas. ***(Building Assessment Provisions for the purpose of section 10 of the building regulation 2006)*** **Note -** The effective location of windows and balconies to avoid overlooking is preferred to the use of screening devices. Where these are used, they should be integrated with the building design and have minimal negative effect on the resident's or neighbour's amenity.		(a) sill heights being a minimum of 1.5 metres above the adjacent floor level; or (b) obscure glazing for any part of a window that is below 1.5 metres above the adjacent floor level; or (c) providing fixed external screens that are – (i) solid translucent screens; or (ii) perforated panels or trellises that have a maximum of 25 percent openings, with a maximum opening dimension of 50mm and that are permanently fixed and durable; or (iii) are offset a minimum of 300mm form the wall of the building. ***(Building Assessment Provisions for the purpose of section 10 of the Building Regulation 2006)***
S8.	On-Site Wastewater Management - (1) The location of the relocated building does not affect the operation of an on-site wastewater management system.	**P8.**	(1) Relocated buildings are setback from on-site wastewater management systems a minimum of – (a) 2 metres – for sub-surface land application systems on level land and down slopes; or (b) 4 metres – for sub-surface land application systems on up slopes; or (c) 15 metres – for surface irrigation land application systems in association with secondary treated effluent; or (d) 10 metres – for surface irrigation land application systems in association with advanced secondary treated effluent.
S9.	Location - Where the building extends over 2 or more lots, it is not relocated onto a single lot with an area of less than 500m^2.	**P9.**	No probable solution identified.
	Solar Access -		

Assessable Development			
Specific Outcomes		**Probable Solutions**	
S10.	(1) The raised or relocation building does not adversely impact on the amenity of adjoining premises through reduction in solar access.	**P10.**	(1) Access to sunlight of neighbouring property habitable rooms and private open space – (a) Is not reduced to less than 3 hours between 9am and 3pm and June 21; or (b) Where existing overshadowing by building and fences is greater than this, sunlight is not further reduced by more than 20 percent.

Table 1 - Maximum Site Coverage and Minimum Setbacks

Zone	Maximum Site Coverage	Minimum Setbacks
■ Conservation ■ Emerging Urban Community ■ Environmental Protection ■ Investigation	For the purposes of the domestic addition, site coverage of buildings and structures does not exceed 1000m^2.	(1) For lots that are less than 2 hectares in area, front, side and rear setback are 10 metres; or (2) For lots that are 2 hectares or greater in area, front, side and rear setbacks are - (a) 20 metres; or (b) 10 metres where screened by planted landscaping; or (3) Sited wholly within a development envelope area, where applicable
■ Park Residential	30 percent	
■ Rural Non-Urban	2.5 percent	
■ Local Centre	75 percent	(1) No front setback requirement; (2) Side and rear setbacks - (a) where the lot or premises is adjoining a residential zone - 3 metres or half the height of the building at that point; or (b) in all other cases - no requirement
■ Low Density Residential	30 percent	(1) The Queensland Development Code – (a) MP1.1, A1(a) and (b), A2(a) and (b) apply for lots under 450m^2; or (b) MP1.2, A1(a) and (b), A2(a) and (b) apply for lots 450m^2 and over.
■ Medium Density Residential ■ Urban Residential - excluding sub-area UR2	50 percent	
■ Urban Residential - sub-area UR2	40 percent	

Table 2 - Minimum Side and Rear Boundary Setbacks

Lot Frontage (metres)	Side and Rear Setbacks (metres)	
	Building Height	
	4.5 metres or less	4.5 to 7.5 metres
14.5 - 15	1.425	1.9
14 - 14.5	1.35	1.8
13.5 - 14	1.275	1.7
13 - 13.5	1.2	1.6
12.5 - 13	1.125	1.5
12 - 12.5	1.05	1.4
11.5 - 12	0.975	1.3
11 - 11.5	0.9	1.2
10.5 - 11	0.825	1.1
10.5 or less	0.75	1

this page purposely
left blank

Division 8 - Private Swimming Pool

7.8.1 Introduction

(1) This division contains the provisions for the Private Swimming Pool Code, that incorporates –

(a) *Building Act, 1975 (*as amended) Alternative Provisions to Queensland Development Code MP1.1 and MP1.2 (section 7.8.2)

(b) Compliance with the Private Swimming Pool Code (section 7.8.3);

(c) Overall Outcomes of the Private Swimming Pool Code (section 7.8.4);

(d) Specific Outcomes and Probable Solutions applicable to Assessable Development (section 7.8.5).

(e) Specific Outcomes and Probable Solutions applicable to Assessable Development (section 7.8.6).

7.8.2 Building Act, 1975 (as amended) Alternative Provision to Queensland Development Code MP1.1 and MP1.2

(1) The provisions of the *Queensland Development Code* (QDC) MP1.1 and MP1.2 apply to the development. To the extent that the Private Swimming Pool Code conflicts with a provision in QDC MP1.2, Private Swimming Pool Code prevails. The Private Swimming Pool Code also contains specific outcomes and probable solutions that are nominated as -

(a) *Building Act 1975* (as amended) "Alternative Provisions" to QDC MP1.1 and MP1.2
(b) Building Assessment Provisions for the purpose of Section 10 of the *Building Regulation, 2006*.

Note -

This code nominates some alternative planning scheme provisions to the QDC in respect of setbacks. The access and parking provision has been nominated as a Building Assessment Provision for the purpose of Section 10 of the *Building Regulation 2006.*

Non compliance with <u>only</u> the acceptable solutions for self assessable development in relation to setbacks or access and parking will not elevate the level of assessment of a proposal from the self assessable development to assessable development under the Redlands Planning Scheme. In these instances, the local government will undertake the functions of a referral agency with Concurrence Agency jurisdiction under IPA to assess and determine these matters.

For example, if the proposal complies with the acceptable solutions for self assessable development in every respect <u>except</u> for a side boundary setback only, the matter of non compliance would be referred to Council for a referral agency considerations and response in accordance with the *Building Act, 1975* (as amended) and will not require a development application.

(2) The following provisions are *Building Act, 1975* (as amended) alternative provisions –

(a) S2(1) and P2(1).

(3) The following provisions are Building Assessment Provisions for the purpose of section 10 of the *Building Regulation, 2006* –

(a) S3 and P3.

7.8.3 Compliance with the Private Swimming Pool Code

(1) Development that is consistent with the following complies with the Private Swimming Pool Code –

(a) acceptable solutions in section 7.8.5 where self-assessable development; or

(b) specific outcomes in section 7.8.6 where assessable development.

7.8.4 Overall Outcomes of the Private Swimming Pool Code

(1) The overall outcomes are the purpose of the Private Swimming Pool Code.

(2) The overall outcome sought for the Private Swimming Pool Code is the following -

(a) to ensure private swimming pools are located to -

(i) provide a safe and pleasant recreational facility for residents and their visitors;

(ii) protect the amenity of adjoining properties and the streetscape;

(iii) protect the function of on-site wastewater systems, where applicable;

(iv) minimise the need for excavation and fill.

Note -

This code only addresses the location of private swimming pools within a lot or premises. Swimming pools must also comply with the relevant requirements of the *Building Code of Australia* and the *Building Act 1975*.

7.8.5 Acceptable Solutions applicable to Self-Assessable Development

Self Assessable Development	
A1.	(1) The swimming pool is proposed on a lot or premises that contains an existing dwelling house, dual occupancy or small lot house; (2) The swimming pool setbacks from the front, side and rear boundaries complies with QDC MP1.1 and MP1.2; (3) The number of on-site car parking spaces complies with Part 9 – Schedule 1 – Access and Parking, Table 1 – Minimum On-Site Vehicle Parking Requirements; (4) Swimming pools are setback from on-site wastewater management systems a minimum of – (a) For sub-surface land application systems that are on level land and down slopes – 2 metres; (b) For sub-surface land application systems on up slopes – 4 metres; (c) For surface irrigation land application systems in association with secondary treated effluent – 15 metres; (d) For surface irrigation land application system in association with advanced secondary treated effluent – 10 metres.

7.8.6 Specific Outcomes and Probable Solutions applicable to Assessable Development

Assessable Development			
Specific Outcomes		**Probable Solutions**	
S1.	Housed Lot - The swimming pool is proposed on a lot or premises that contains a dwelling house, dual occupancy or small lot house.	**P1.**	No probable solution identified.
S2.	Boundary Setbacks - (1) The swimming pool - (a) does not adversely impact on the amenity of adjoining properties through - (i) run-off from splashing and overtopping of the swimming pool; (ii) reduction in visual privacy; (b) does not adversely impact on the streetscape; (c) is located to provide access for life-saving activities; (d) is located to provide visual privacy for pool users; (2) Mechanical plant and equipment associated with the private swimming pool is - (a) located where it does not cause a noise nuisance; or (b) contained within acoustic housing. ***(Building Act, 1975 alternative provision to QDC MP1.1 or MP1.2, P1 and P2)***	**P2.**	(1) The Queensland Development Code – (a) Part 11, A1(d) and A2(e) for lots under 450m2 applies; or (b) Part 12, A1(d) and A2(e) fro lots 450m2 and over applies. (2) No probable solution applies. ***(Building Act, 1975 alternative provision to QDC MP1.1 or MP1.2, A1 and A2)***
S3.	Access and Parking - A sufficient number of car parking spaces to cater for resident and visitor parking is maintained. ***(Building Assessment Provisions for the purpose of section 10 of the Building Regulation, 2006)***	**P3.**	The number of on-site car parking spaces complies with Part 9 – Schedule 1 – Access and Parking, Table 1 – Minimum On-Site Vehicle Parking Requirements. ***(Building Assessment Provisions for the purpose of section 10 of the Building Regulation, 2006)***
S4.	On-Site Wastewater Management - (1) The location of the swimming pool does not affect the operation of an on-site wastewater management system.	**P4.**	(1) The swimming pool is setback from on-site wastewater management systems a minimum of - (a) for subsurface land application systems that are on level land and down slopes – 2 metres;

Assessable Development			
Specific Outcomes		**Probable Solutions**	
			(b) for sub-surface land application systems on up slopes – 4 metres; (c) for surface irrigation land application systems in association with secondary treated effluent – 15 metres; (d) for surface irrigation land application systems in association with advanced secondary treated effluent – 10 metres.
S5.	Excavation and Fill - (1) The swimming pool does not result in significant alternation to the landform through excessive excavation and fill, other than that required to accommodate the pool depth.	**P5.**	(1) The swimming pool – (a) Is located on a slope with a gradient less that 15 percent (1 in 7); or (b) Is suspended over any fall in the landform.

this page purposely
left blank

Division 9 - Private Tennis Court

7.9.1 Introduction

(1) This division contains the provisions for the Private Tennis Court Code, that incorporates -

(a) Compliance with the Private Tennis Court Code (section 7.9.2);

(b) Overall Outcomes of the Private Tennis Court Code (section 7.9.3);

(c) Acceptable Solutions applicable to Self-Assessable Development (section 7.9.4);

(d) Specific Outcomes and Probable Solutions applicable to Assessable Development (section 7.9.5).

7.9.2 Compliance with the Private Tennis Court Code

(1) Development that is consistent with the following complies with the Private Tennis Court Code -

(a) acceptable solutions in section 7.9.4 where self-assessable development; or

(b) specific outcomes in section 7.9.5 where assessable development.

Note -

Part 11 - Planning Scheme Policy 5 - Environmental Emissions may assist in achieving specific outcomes within the Private Tennis Court Code.

7.9.3 Overall Outcomes of the Private Tennis Court Code

(1) The overall outcome is the purpose of the Private Tennis Court Code.

(2) The overall outcome sought for the Private Tennis Court Code is the following -

(a) to ensure private tennis courts are located and designed to -

(i) provide pleasant recreational facilities for residents and their visitors;

(ii) protect the amenity of adjoining and nearby properties and the streetscape;

(iii) minimise the need for excavation and fill.

7.9.4 Acceptable Solutions applicable to Self-Assessable Development

Self-Assessable Development	
Acceptable Solutions	
A1.	(1) The tennis court does not incorporate night-time lighting; (2) The tennis court, including fencing, is located - (a) within a development envelope; or (b) a minimum of - (i) 6 metres from the front boundary; (ii) 3 metres from any side or rear boundary; (c) on a slope with a gradient less than 15 percent (1 in 7); (3) Tennis court fencing - (a) does not extend more than 4.5 metres above the court surface; (b) is not solid for more than 2 metres above the court surface; (4) The use of the tennis court does not generate noise, measured as the $L_{Amax,adj,T}$ parameter, at the boundary of the lot or premises, which is greater than - (a) 5 dB(A) above the background noise level between 7am to 10pm; (b) 3 dB(A) above the background noise level between 10pm to 7am; **Note -** The $L_{Amax,adj,T}$ parameter is defined in the *Noise Measurement Manual, Environmental Protection Agency, 2000*. Refer to Planning Scheme Policy 5 – Environmental Emissions for further information relating to noise impacts. (5) A 3 metre wide planted buffer is provided, within the setback area, when the tennis court is within 15 metres of a front boundary or 10 metres of a side or rear boundary.

7.9.5 Specific Outcomes and Probable Solutions applicable to Assessable Development

Assessable Development			
Specific Outcomes		**Probable Solutions**	
S1.	Site Layout - (1) The location of the tennis court - (a) maintains setbacks consistent with the surrounding development; (b) minimises the need for excavation and fill; (c) minimises the removal of native plants.	**P1.**	(1) The tennis court, including fencing, is located - (a) within a development envelope; or (b) a minimum of - (i) 6 metres from the front boundary; (ii) 3 metres from any side or rear boundary; or (iii) 8 metres from any side or rear boundary where the court is to be illuminated; (c) on a slope with a gradient less than 15 percent (1 in 7). **Notes -** ■ Sites with average slopes in excess of 15 percent (1 in 7) require a geotechnical analysis report. Refer to Planning Scheme Policy 9 - Infrastructure Works.
S2.	Fencing - (1) The height, appearance and materials of fencing are not visually intrusive and utilise non-reflective colours.	**P2.**	(1) Tennis court fencing - (a) does not extend more than 4.5 metres above the court surface; (b) is not solid for more than 2 metres above the court surface.
S3.	Lighting - (1) Where the tennis court is illuminated - (a) it provides adequate lighting for the use; (b) direct or reflected light emissions do not adversely impact on persons, activities, or native animals.	**P3.**	(1) Lighting systems - (a) use light poles which are a maximum height of 8 metres above the court surface; (b) comprise a side lighting system as described in *Australian Standard 2560.2.1:2003 - Sports Lighting - Specific Applications - Lighting for Outdoor Tennis*; (c) do not cause the vertical illumination resulting from direct, reflected or other incidental light emanating from the tennis court to exceed 8 lux when measured at any point at or above ground level 1.5 metres outside the boundary of the lot, premises or development envelope on

Assessable Development			
Specific Outcomes		**Probable Solutions**	
			which the tennis court is located.
S4.	Noise - (1) Noise originating from the tennis court does not have an adverse impact on the amenity of the area or cause nuisance to nearby properties.	**P4.**	(1) The use of the tennis court does not generate noise, measured as the $L_{Amax,adj,T}$ parameter, at the boundary of the lot or premises, which is greater than - (a) 5 dB(A) above the background noise level between 7am to 10pm; (b) 3 dB(A) above the background noise level between 10pm to 7am. **Note -** ■ The $L_{Amax,adj,T}$ parameter is defined in the *Noise Measurement Manual* (Environmental Protection Agency, 2000). ■ Refer to Planning Scheme Policy 5 - Environmental Emissions for further information relating to noise impacts.
S5.	Landscaping - Landscaping measures enhance the appearance and screening of the tennis court from adjoining properties.	**P5.**	A 3 metre wide planted buffer is provided, within the setback area, when the tennis court is within 15 metres of a front boundary or 10 metres of a side or rear boundary.

Division 10 - Private Waterfront Structures

7.10.1 Introduction

(1) This division contains the provisions for the Private Waterfront Structures Code, that incorporates -

(a) Compliance with the Private Waterfront Structures Code (section 7.10.2);

(b) Overall Outcomes of the Private Waterfront Structures Code (section 7.10.3);

(c) Specific Outcomes and Probable Solutions applicable to Assessable Development (section 7.10.4).

7.10.2 Compliance with the Private Waterfront Structures Code

(1) Development that is consistent with the specific outcomes in section 7.10.4 complies with the Private Waterfront Structures Code.

7.10.3 Overall Outcomes of the Private Waterfront Structures Code

(1) The overall outcomes are the purpose of the Private Waterfront Structures Code.

(2) The overall outcome sought for the Private Waterfront Structures Code is the following -

(a) to ensure private waterfront structures -

(i) are of safe and structurally sound design, location and construction;

(ii) do not result in adverse impacts on the environmental values of the Moreton Bay foreshore and other waterways within the planning scheme area.

Note -

This code does not apply to artificial waterways, such as canals, as defined under the *Coastal Protection and Management Act 1995.*

7.10.4 Specific Outcomes and Probable Solutions applicable to Assessable Development

Assessable Development			
Specific Outcomes		**Probable Solutions**	
S1.	(1) Private waterfront structures including jetties, pontoons, boat ramps or slipways - (a) do not interfere with ecological processes in the foreshore area; (b) do not alter the ground level of the foreshore; (c) do not involve removal of native plants, marine or terrestrial; (d) are designed and constructed according to location and function; (e) maintain the access, amenity and enjoyment of the foreshore by the public and adjoining properties; (f) do not impact adversely on the structural stability of the foreshore; (g) do not place additional loads on existing revetment walls; (h) do not impose adverse loads on utility infrastructure; (i) have mooring systems constructed to sustain all relevant loadings including - (i) earth and hydraulic pressure; (ii) berthing impact; (iii) dead load of the structure; (iv) wind, tidal and flood flows, including debris.	**P1.**	(1) Private waterfront structures where a - (a) jetty - (i) maintain a minimum separation distance of 100 metres between the jetty and any other waterfront structure; (ii) are not greater than 15 metres in length; (iii) have a minimum width of 900mm and a maximum width of 2 metres on any part of the deck area; (iv) does not result in the removal of any native plants; (v) are for domestic purposes only and are not used for or in conjunction with any commercial activity; (vi) are for the shared use of up to five adjoining properties where those lots are developed for dwelling units only and legal access is available to and from each participating property, to the jetty; (vii) run parallel to the side boundaries of the lot to which the jetty is attached; (viii) have a minimum deck level of 300mm above mean high water springs; (ix) are provided with handrails along at least one side; (x) are located free from the local government's stormwater outlets; or **Note -** Jetties should be designed and constructed in accordance with - ■ *Australian Standard 1720.1:1997 - Timber Structures - Design Methods*; ■ *Australian Standard 2159:1995 - Piling - Design and Installation;* ■ *Australian Standard 3600:2001 - Concrete Structures*. (b) pontoon - (i) maintain a minimum separation distance of 100 metres between the

Assessable Development			
Specific Outcomes		Probable Solutions	
			pontoon and any other waterfront structure; (ii) are associated with a dwelling unit for domestic purposes only and are not used for or in conjunction with any commercial activity; (iii) does not result the removal of any native plants; (iv) are not greater than 15 metres in length; (v) have a mooring system that is - a. attached to the flotation unit and to concrete anchors positioned in the banks behind; b. structurally independent of revetment walls; c. beyond the slip zone; (vi) have a mooring system designed with provision for - a. vertical movement to allow for tidal effects and the highest recorded flood effects; b. positive fixing of the flotation unit in plan position; or (c) boat ramp - (i) maintain a minimum separation distance of 100 metres between the boat ramp and any other waterfront structure; (ii) are associated with a dwelling unit for domestic purposes only and are not used for or in conjunction with any commercial activity; (iii) does not result in the removal of any native plants; (iv) are a maximum width of 3 metres; (v) have a maximum overall length of 5 metres; (vi) have surfaces finished and maintained to inhibit the formation of a slippery surface; (vii) have a finished surface level that is within 200mm of natural surface levels wherever possible;

Assessable Development			
Specific Outcomes		**Probable Solutions**	
			(viii) are not used for permanent parking or storage of vessels and trolleys when below 2.4 metres AHD; or (d) slipway - (i) maintain a minimum separation distance of 100 metres between the slipway and any other waterfront structure; (ii) are associated with a dwelling unit for domestic purposes only and are not used for or in conjunction with any commercial activity; (iii) does not result in the removal of any native plants; (iv) are recessed into the natural ground with the upper surface of the slip rail not protruding above ground level; (v) do not extend below mean high water springs; (vi) when used in conjunction with a boat ramp are recessed into the boat ramp and are finished flush with the surface level of the boat ramp; (vii) are a maximum width of 1.2 metres; (viii) are not used for permanent parking or storage of vessels and trolleys.
S2.	Public Access - (1) Private waterfront structures do not prevent or make unsafe - (a) legal public access to the water's edge along a public path; or (b) legal private access to the water's edge from any part of a lot or premises adjoining the water's edge.	**P2.**	(1) No probable solution identified.
S3.	Existing revetment walls, retaining walls and seawalls - (1) Earthworks in association with a private waterfront structure adjacent to existing revetment walls, retaining walls, and seawalls do not place	**P3.**	(1) For existing waterfront revetment walls, retaining walls and sea walls - (a) the minimum live load for the surcharge at top of wall is

Assessable Development			
Specific Outcomes		**Probable Solutions**	
	unacceptable loads on existing walls, stormwater outlets or other infrastructure. **Note -** The local government does not support the establishment of new revetment and retaining walls in natural waterways or Moreton Bay.		2.0kPa distributed; (b) the minimum factor of safety against overturning and sliding is 1.5; (c) height is not extended by an additional soil surcharge loading. **Note -** Separate retaining walls that are constructed above the level of the mean high water spring tide at that location behind existing waterfront walls are designed for the appropriate loading as determined by the local government.

this page purposely
left blank

Division 11 - Reconfiguration

7.11.1 Introduction

(1) This division contains the provisions for the Reconfiguration Code, that incorporates -

(a) Compliance with the Reconfiguration Code (section 7.11.2);

(b) Overall Outcomes for the Reconfiguration Code (section 7.11.3);

(c) Specific Outcomes and Probable Solutions applicable to Assessable Development (section 7.11.4).

7.11.2 Compliance with the Reconfiguration

(1) Development that is consistent with the specific outcomes in section 7.11.4 complies with the Reconfiguration Code.

Note -

The following planning scheme policies will assist in achieve specific outcomes for the Reconfiguration Code -

- Planning Scheme Policy 3 - Contributions and Security Bonding;
- Planning Scheme Policy 9 - Infrastructure Works.

7.11.3 Overall Outcomes of the Reconfiguration Code

(1) The overall outcomes are the purpose of the Reconfiguration Code.

(2) The overall outcomes sought for the Reconfiguration Code are the following -

(a) reconfiguration supports the *SEQ Regional Plan 2005 - 2026* -
(i) Strategic Directions, Principles, Policies;
(ii) Regulatory Provisions as they relate to the Regional Landscape and Rural Production and Investigation Areas;

(b) reconfiguration makes a positive contribution to the formation of neighbourhoods;

(c) reconfiguration results in safe, convenient and attractive neighbourhoods and places of economic activity, which meet the diverse and changing needs of the community;

(d) reconfiguration facilitates the creation of lots, which satisfy population growth and economic need, while ensuring that lot size and mix is suited to -
(i) the local landscape setting;
(ii) expected end uses, associated activities and building forms;

(e) if creating a new lot or lots or dividing land into parts by agreement, the lot or part of a lot -
(i) is capable of being adequately serviced having regard to expected use of the premises and its location;
(ii) has an area and dimension consistent with -
a. the outcomes sought for the zone in which it occurs or any use approved for the subject land;
b. any significant physical constraints of the land including environmental values, landscape setting or natural hazards;
c. the provision of any setbacks for the use in that zone, if applicable;

(f) if the reconfiguration opens a new road, the reconfiguration design is consistent with -
(i) the outcomes sought for the zone in which it occurs or any use approved for the premises;

(ii) any significant physical constraints of the land including environmental values, landscape setting or natural hazards;
(iii) the provision of a legible, integrated, efficient and safe movement network for vehicles, pedestrians, cyclists and public transport;
(iv) the provision of well located open space that facilitates community interaction, and passive and active recreational opportunities;
(v) the use or future use of adjoining premises;
(vi) the efficient use of existing infrastructure;
(vii) the orderly and cost effective extension of infrastructure;
(viii) where for residential uses - the siting of buildings to reduce energy consumption and provide climatic conditions that result in high quality living environments;

(g) infill reconfiguration respects established lot sizes, frontage widths and streetscapes;

(h) if in the Urban Residential, Low Density Residential or Medium Density Residential Zones, created lots are of sufficient size and suitable proportions for -
(i) residential uses, associated activities and other development;
(ii) the various housing types expected in the zone and on the premises;
(iii) non-residential uses compatible with the amenity of the area and outcomes sought for the zone;
(iv) the timely, logical and efficient creation of lots having regard to -
a. consolidation and infill of existing urban areas;
b. provision of infrastructure;

(i) if in the Rural Non-Urban Zone, created lots are of sufficient size and suitable proportions for -
(i) productive agricultural activities, and where necessary, a residential use on the same lot;
(ii) locationally specific uses as expected in the zone;

(j) if in the Park Residential, Environmental Protection or Conservation Zones, created lots maximise retention, enhancement and the long-term management of environmental values by ensuring -
(i) uses and development are suitably located;
(ii) access and utility infrastructure provision minimise visual scaring of the land and the loss of environmental or scenic values;

(k) if in the General Industry, Commercial Industry or Marine Activity Zones created lots result in a lot layout that is adaptable to allow for a variety of large and smaller scale end users;

(l) in certain zones reconfiguration does not create additional lots due to -
(i) locational and servicing constraints;
(ii) need to minimise fragmentation of land;
(iii) need for land capability investigation and forward planning processes, specifically in the Emerging Urban Community Zone and Investigation Zone;

(m) if reconfiguring with a Community Management Statement the creation of lots -
(i) promotes alternative titling systems;
(ii) ensures building siting, open space, access and landscaping are suited to the needs of end users;
(iii) in lands with identified environmental values provides opportunities for reconfiguration in a manner that achieves enhanced environmental outcomes;

(n) if rearranging the boundaries of a lot, the useability of and access to all lots affected is improved or maintained;

(o) volumetric reconfiguration facilitates efficient development;

(p) if creating an easement from a constructed road, the useability of and access to all lots affected is improved or maintained.

7.11.4 Specific Outcomes and Probable Solutions applicable to Assessable Development

Assessable Development			
Specific Outcomes		**Probable Solutions**	
S1.1	Reconfiguration Design - (1) The reconfiguration design - (a) responds to the landscape setting and topography of the location; (b) protects environmental values and functions including habitat areas, corridors and waterways; (c) responds to potential impacts of previous land uses such as land contamination; (d) does not result in lots that are subject to risk or hazard from flood, bushfire or landslip; (e) maintains a high level of environmental amenity from existing or potential emissions such as noise and air quality impacts; (f) does not compromise the ongoing operation of existing uses; (g) integrates with surrounding neighbourhoods and areas of economic or social activity; (h) ensures future development on adjacent and nearby lands is able to occur in an orderly, efficient and cohesive manner; (i) complements existing attractive streetscapes and aids in establishing attractive streetscapes in newly developing areas; (j) takes into account the location, size, accessibility and function of existing and future open space networks; (k) enhances personal safety and perception of safety and minimises potential for crime, vandalism and fear through achievement of surveillance by drivers, pedestrians and occupants.	**P1.1**	(1) No probable solution identified, as each proposal will require an individual approach. **Note -** To assist in achieving the specific outcomes in S1.1 - S1.5 reconfiguration is required to consider all relevant matters and to satisfy the requirements of the local government's Reconfiguration Design Process detailed in Planning Scheme Policy 9 - Infrastructure Works. This involves the preparation and submission of a Site Analysis Plan and Structure Plan in addition to Subdivision Plans.
S1.2	Movement Network - (1) The movement network associated with reconfiguration - (a) is based on the functional road classification of the	**P1.2**	(1) No probable solution identified. Refer to P1.1.

Assessable Development			
Specific Outcomes		Probable Solutions	
	local government's adopted Road Hierarchy; (b) is designed to provide a clear distinction between road types based on legibility, convenience, traffic volumes, traffic speed and amenity; (c) provides a high level of internal accessibility and good external connections for vehicles, pedestrians and cyclists, and to public transport through the use of a grid pattern layout; (d) is not served by a single entry/exit street; (e) limits the use of culs-de-sac and only incorporates these where required due to topographic or similar constraints; (f) caters for extension of existing or future public transport routes that are convenient and accessible to the community; (g) incorporates road reserves necessary for the effective provision of utility infrastructure, street tree planting and pedestrian and cycle paths; (h) acts as a separator to hazards, specifically flood and bushfire; (i) provides a continuous road adjacent to foreshore areas and maximises road frontages to open space areas; (j) where reconfiguration directly accesses existing Trunk Collector, Sub Arterial or Arterial Roads, uses address the road frontage without providing individual access to each lot; (k) Collector and Access Streets and Places are designed to reduce traffic volume and speed; (l) incorporates pedestrian and cycle facilities that - (i) are safe, attractive and are located largely along roads and in open space areas; (ii) increase opportunities for access to facilities and services such as -		**Note -** For further information on provision of utility infrastructure refer to - ■ Part 8 - Division 7 - Infrastructure Works Code; ■ Planning Scheme Policy 9 - Infrastructure Works.

Assessable Development			
Specific Outcomes		**Probable Solutions**	
	a. education facilities; b. community facilities; c. centres; d. open space; e. public transport; (iii) are fronted by uses and avoid areas with major breaks in surveillance, specifically on routes to and from those activities identified in a. - e. above.		
S1.3	Open Space - (1) Reconfiguration provides for public open spaces that - (a) are well distributed; (b) contribute to the legibility and character of the local area; (c) are suitable to provide adequate facilities that meet community needs and expectations based on the population density and demographic structure expected in the area; (d) provide a range of passive and active recreational opportunities; (e) are cost effective to maintain; (f) complement the broader open space network; (g) form links between open space areas; (h) contribute, through good design, to stormwater management without hindering the core purpose of public open space; (2) Residential reconfiguration ensures open space provision and location is of a suitable size and is highly accessible to the community; (3) Land dedicated for open space purposes is usable for its core purpose being the provision of open areas that are suitable for passive and active recreation and community interaction by - (a) not including land below the 5 percent AEP (1 in 20 ARI) which functions primarily as overland drainage paths and may also contain or be capable of enhancing environmental values; (b) fulfilling an identified gap in provision of local parks	**P1.3**	(1) No probable solution identified; (2) No probable solution identified; (3) No probable solution identified. Refer to P1.1. **Note -** For information specific to open space requirements refer to - ■ Planning Scheme Policy 3 - Contributions and Security Bonding; ■ Planning Scheme Policy 9 - Infrastructure Works.

Assessable Development			
Specific Outcomes		**Probable Solutions**	
	based on - (i) location; (ii) function; (iii) standard of provision; (iv) size; (v) land characteristics.		
P1.4	Infrastructure - (1) Reconfiguration - (a) makes efficient use of existing infrastructure; (b) facilitates the orderly and efficient extension of infrastructure; (c) ensures sites are capable of being provided with all services, specifically - (i) reticulated water; or (ii) a potable water supply; (iii) reticulated sewerage; or (iv) where the site is not able to be connected to a reticulated sewerage system, the lot is of a sufficient size based on - a. soil, slope or other locational constraints; b. expected end uses, users and building forms; that ensure wastewater is able to be treated and disposed of on-site; (v) energy in the form of electricity and/or gas; (vi) telecommunications; (d) design is capable of on-site management of all stormwater run-off that will be generated once fully developed with expected end uses and building forms; (e) provides constructed road access commensurate with the location and expected end uses.	**P1.4**	(1) No probable solution identified. Refer to P1.1. **Note -** For further information on provision of utility infrastructure refer to - ■ Part 8 - Division 7 - Infrastructure Works Code; ■ Part 8 - Division 9 - Stormwater Management; ■ Planning Scheme Policy 9 - Infrastructure Works.
S1.5	Where reconfiguration intends to incorporate non-residential uses they are located at focal points within convenient walking distance for residents or workers to reinforce the function of the local area.	**P1.5**	No probable solution identified. Refer to P1.1.

Assessable Development			
Specific Outcomes		**Probable Solutions**	
S1.6	(1) Where in the Urban Residential, Medium Density Residential, Low Density Residential or Point Lookout Residential Zones - lot and road design assists in orientating dwelling units to reduce energy consumption and provide comfortable climatic conditions that result in high quality living environments by - (a) maximising solar access to the north in winter; (b) minimising solar access to the east and west in summer; (c) maximising access to any prevailing summer breezes; (d) minimising exposure to prevailing winter winds; (e) maximising solar access having regard to the slope of the land and resulting overshadowing; or	**P1.6**	(1) Reconfiguration design reduces energy consumption and result in high quality living environments by - (a) each new lot being generally rectangular in shape and the majority of lots having a longitudinal axis on a north south alignment; or (b) where the longitudinal axis is on an east-west alignment, the lot has an increased width to maximise its northern setback; (c) roads being primarily aligned along an east-west alignment, where practicable; (d) locating narrower lots on north facing slopes where shadows are shorter; (e) increasing lot width and depth on south facing slopes where shadows are wider; or
	(2) Where in the General Industry, Commercial Industry, Island Industry or Marine Activity Zones, reconfiguration - (a) protects the amenity of adjoining and nearby areas; (b) provides buffers between any existing or potentially incompatible land uses, specifically sensitive receiving environments; (c) provides for a mix of lot sizes that - (i) facilitate the variety of uses expected in these zones; (ii) are adaptable and allow for easy amalgamation for large uses; (iii) are suited to a range of small and mid sized tenancies within individual lots; or		(2) No probable solution identified. Refer to P1.1; or
	(3) Where in the Rural Non-Urban Zone reconfiguration - (a) maintains rural lands in usable parcels to reduce fragmentation of the zone; (b) does not negatively impact on the economic viability of existing or potential uses in this zone; (c) ensures that lots created are suitable for agricultural or other productive uses; (d) protects the rural landscape setting in which it is		(3) No probable solution identified. Refer to P1.1; or

Assessable Development			
Specific Outcomes		**Probable Solutions**	
	proposed; (e) protects the amenity of adjacent and nearby areas; (f) provides buffers between any existing or potentially incompatible land uses, specifically sensitive receiving environments; or (4) Where in the Park Residential, Environmental Protection or Conservation Zones, reconfiguration - (a) protects the landscape setting and scenic values; (b) protects, enhances and manages environmental values and the viability of those values; (c) results in lots of a shape and size suited to the topography and specific characteristics of the land; or (5) Where in any of the Centre Zones, reconfiguration - (a) facilitates orderly development; (b) complements the identified role and function of the centre; (c) enhances internal and external movement of vehicles, pedestrians and cyclists; (d) enriches the vitality and amenity of the centre.		(4) No probable solution identified. Refer to P1.1; or (5) No probable solution identified. Refer to P1.1.
S1.7	(1) In the following zones, Standard Format Plan reconfiguration is inconsistent due to - (a) in Emerging Urban Community Zone - requires significant investigation to determine areas available for more intense forms of development. Until investigations are complete no further fragmentation of the land occurs; or (b) in the Investigation Zone - requires amendment to the *SEQ Regional Plan 2005 - 2026* following significant investigation including - (i) optimum and most suitable use of the land; (ii) form and intensity of development; (iii) impact on the adjacent areas of scenic and conservation value;	**P1.7**	(1) The creation of Standard Format Plan lots is not undertaken in these zones.

Assessable Development			
Specific Outcomes		**Probable Solutions**	
	(iv) protection and full public access to the coastline and the bay; (v) impacts on external infrastructure; (c) in Marine Activity - sub-area MA2 - Beveridge Road, Victoria Point - existing lot sizes are suited to proposed uses, further reconfiguration will hinder ability to undertake these uses; or (d) in Point Lookout Tourist - all sub-areas - existing lot sizes are suited to proposed uses being integrated tourist accommodation, further reconfiguration will hinder ability to undertake these uses; or (e) in Rural Non-Urban - sub-area RN3 on Southern Moreton Bay Islands - existing lot sizes are suited to proposed uses, further reconfiguration will hinder ability to undertake these uses; or (f) in SMBI Residential including sub-area SR1 - constraints associated with - (i) provision of utility and road infrastructure; (ii) environmental values; (iii) drainage and flooding; (iv) hazard associated with bushfire risk; or (g) in Urban Residential sub-area UR3 and Local Centre sub-area LC1 constraints associated with the land being erosion prone.		
S2.1	Lot Size and Layout in all Zones - (1) Reconfiguration is in accordance with the *SEQ Regional Plan 2005 - 2026*, as it applies to the Regional Landscape and Rural Production, and Investigation Areas by compliance with, Part H - Regulatory Provisions of the Plan; (2) The creation of Standard Format Plan lots results in a mix of lot sizes that suit a variety of needs with areas and dimensions that -	**P2.1**	(1) No probable solution identified; **Note -** Refer to Diagram 1 - *SEQ Regional Plan 2006 - 2026* which is a graphic representation of land in the Regional Landscape and Rural Production, and Investigation Areas. (2) The creation of lots by Standard Format Plan of land, outside the *SEQ Regional Plan 2005 - 2026*, Regional Landscape and Rural

Assessable Development			
Specific Outcomes		Probable Solutions	
	(a) use land efficiently and allow amalgamation of lots to suit specific needs; (b) protect environmental values, and cultural and scenic features; (c) address site constraints such as identified hazards, slope and site drainage; (d) retain significant features, such as native plants; (e) take into account the slope of the land to minimise the need for excavation and fill; (f) for housing, are of a size and width that - (i) take advantage of microclimatic benefits; (ii) have dimensions to allow on-site solar access and access to breezes; (iii) provide locations for private outdoor places; (iv) provide convenient vehicle access and on-site parking; (v) where reticulated sewer is not available, have a sufficient area for on-site wastewater management systems;		Production, and Investigation Areas, - (a) have a lot size and frontage equal to or greater than that indicated in Table 1 for the relevant zone; (b) result in lots that – (i) have a maximum overall slope across the long axis and the short axis of 1 in 7 (15 percent); (ii) generally rectangular in shape; or (iii) if required to be irregular, are capable of containing a rectangle of the size nominated in Table 1, where specified;
	(3) The creation of lots that are subject to a Community Management Statement ensures resulting lot sizes are based on - (a) density requirements for the relevant zone; (b) lot type, area and frontage criteria specified for the relevant zone; (c) expected end uses or approved uses;		(3) Where involving a Community Management Statement, resulting lot size is determined on the merits of the proposal based on - (i) density requirements for the relevant zone; (ii) lot type, area and frontage criteria identified in Table 1 for the relevant zone; (iii) the expected end use or approved uses ;
	(4) Reconfiguration that proposes internal lots - (a) protects the character of the existing streetscape; (b) protects residential amenity for the lots being created and existing properties; (c) allows for easy vehicle access by multiple users; (d) protects the safety of pedestrians and cyclists by ensuring accessways to the road frontage are designed to maintain visibility to the verge; (e) allows sufficient street frontage for waste collection		(4) Where internal lots are proposed - (a) lot size complies with the requirements of Table 1 for the relevant zone; (b) a maximum of two internal lots are created behind a street frontage lot; (c) they are not located in cul-de-sac heads; (d) where the internal lot is capable of further subdivision under this planning scheme the accessway is that required for two internal lots; (e) one accessway serves all internal lots and is located on only one side of the street

Assessable Development			
Specific Outcomes		**Probable Solutions**	
	facilities. **Note -** The local government considers that unless required by specific site conditions, such as topography, access or shape, internal lots are undesirable and are not preferred.		frontage lot; (f) for reconfiguration that results in a road frontage lot creating one or two internal lots - (i) the road frontage lot is truncated at the junction of the front boundary and the accessway for a distance of 1 metre along the frontage and 5 metres along the accessway; (ii) fencing in the truncated area is not greater than 1.2 metres high to ensure clear sight lines to the verge; (g) for reconfiguration that results in numerous lots and includes internal lots - (i) incorporate a truncation of 1 metre along the frontage and 5 metres along the accessway on each side of the accessway on Access or higher order roads; (ii) where there are two adjoining internal lots created, a common accessway serves both lots and incorporates a truncation of 1 metre along the frontage and 5 metres along the accessway on each side of the accessway; (h) driveway location within the accessway allows for landscaping and utility infrastructure along the length of the driveway; (i) accessways incorporate passing bays to reduce the quantity of hard surfaces and to facilitate landscaping along the length of the driveway; (j) the width of any existing or proposed residential lot adjoining an accessway is not less than 15 metres at any point throughout its depth; (k) a designated waste collection area is provided within the road reserve adjoining the street frontage and internal lot(s) that is - (i) of a size necessary to cater for the maximum number of rubbish bins required by the street

Assessable Development			
Specific Outcomes		**Probable Solutions**	
			frontage lot and internal lots; (ii) finished as a hard surface; (iii) within easy access of all properties serviced by the accessway.
S2.2	(1) In the Urban Residential Zone, lots are of a size and width that - (a) achieve a density that meets expected population growth; (b) maintains a quality lifestyle; (c) meets the requirements of people with different housing needs; (d) provides housing choice.	**P2.2**	(1) Medium and major reconfiguration by Standard Format Plan, whether or not incorporating a Community Management Statement, provides - (a) 30 percent of lots as small lot house lots that are - (i) identified on the plan of subdivision as being for this end use in conjunction with identification of the lot size, (ii) distributed throughout the development based on - a. a maximum of four having adjoining boundaries on Access Streets or high order roads; b. not directly adjoining other small lots in an Access Place; c. being located to front or adjoin public open space; d. not being located on corner lots; e. when located in a cul-de-sac - are on a T or Y cul-de-sac head that provides for on-street parking at either end of the T or in the centre of the cul-de-sac; (b) 50 percent of corner lots for an end use of dual occupancy that are - (i) identified on the plan of subdivision as being for this end use; (ii) of a width on each street frontage to allow each dwelling unit to address a separate frontage;
S2.3	(1) In the Medium Density Zone and Urban Residential Zone sub-area UR1 lots are of a size and width that - (a) achieve a density of development anticipated in	**S2.3**	(1) No probable solution identified.

Assessable Development			
Specific Outcomes		**Probable Solutions**	
	these zones and meets expected population growth; (b) facilitates the range of housing types anticipated in these zones, such as Aged Persons and Special Needs Housing and Multiple Dwellings, among others; (c) encourages amalgamation rather than reconfiguration of land in these zones.		
S2.4	(1) In Commercial Industry, General Industry and Island Industry Zones - lots are of a size, shape and width that - (a) supports a range of uses; (b) allows for the easy amalgamation of lots; (c) allows for adequate landscaping and stormwater overland drainage; (d) provides convenient vehicle access, manoeuvrability and on-site parking.	**P2.4**	(1) No probable solution identified.
S2.5	In the Rural Non-Urban Zone - lots are of a size that maximise economically viable productive activities and allow for the buffering of activities from potentially incompatible uses on nearby lands.	**P2.5**	No probable solution identified.
S2.6	In the Park Residential, Environmental Protection and Conservation Zones - lots are of a size and shape that maximises opportunities to maintain, enhance and manage environmental values.	**P2.6**	A development envelope is established in conjunction with the reconfiguration. **Note -** In some instances it may be necessary to prepare a Property Management Plan to ensure the long-term viability of environmental values. Refer to Planning Scheme Policy 9 - Infrastructure Works for details on development envelope and Property Management Plans.
S2.7	(1) In all other zones, lot size - (a) facilitates uses expected in the zone; (b) maintains and enhances economic, social or environmental values as appropriate to the zone.	**P2.7**	(1) No probable solution identified.

Assessable Development			
Specific Outcomes		Probable Solutions	
	Minor Reconfiguration -		
S3.	(1) Minor reconfiguration ensures the lot(s) created - (a) are capable of containing uses expected to locate within the lot(s); (b) where for residential dwelling units, all assessment criteria of the specific dwelling unit type is able to be achieved including, but not limited to - (i) siting and setbacks; (ii) privacy; (iii) solar access; (iv) private open space; (v) service areas; (c) where small lots provide a frontage width that is in proportion to the depth of the lot. **Note -** ■ It is recommended that for lots less than 500m^2 or with a frontage of 14 metres or less that the reconfiguration and material change of use are submitted concurrently to ensure sufficient information is available to allow the local government, with certainty, to consider issuing a development permit for the creation of a lot. ■ Where doubt exists with the local government as to the ability of the lot to be used for its intended purpose and achieve the outcomes being sought for that use further information may be required to satisfy the local government's consideration of the reconfiguration application.	**P3.**	(1) Minor reconfiguration where creating lot(s) - (a) the lot size, and frontage width comply with Table 1 - (i) the reconfiguration plan incorporates a three dimensional envelope that illustrates that the built form of the resulting use is capable of being contained on the proposed lot and will satisfy the outcomes sought for that resulting use; (ii) lots do not exceed a frontage to depth ratio of 1 in 4; (b) for a dual occupancy - the use is approved and building and other works are substantially begun, at lock up, before any subsequent Community Management Statement reconfiguration occurs; **Note -** ■ The three dimensional envelope detailed in P3.(1)(a)(i) form a component of the conditions of any approved development permit.
	(2) Minor reconfiguration that creates internal lots - (a) minimises impacts on adjoining properties by limiting the total number of internal lots to a maximum of two; (b) protects the safety of pedestrians and cyclists by ensuring accessways to the road frontage are designed to maintain visibility to the verge. (c) provides an adequate		(2) For minor reconfiguration that results in a road frontage lot creating one or two internal lots - (a) internal lot size, remaining road frontage lot size and frontage width and accessway widths comply with Table 1; (b) the road frontage lot is truncated at the junction of the front boundary and the accessway for a distance of 1 metre along the frontage and 5 metres along the accessway; (c) fencing in the truncated area is

Assessable Development			
Specific Outcomes		**Probable Solutions**	
	internal manoeuvring area for vehicles to exit the internal lot in forward gear.		not greater than 1.2 metres high to ensure clear sight lines to the verge.
S4.	Reconfiguration that incorporates Development Envelopes - (1) Development envelopes where incorporated in reconfiguration - (a) achieve enhanced - (i) environmental and scenic outcomes; (ii) quality of life, such as a reduction in noise impacts; (b) are of a size that is able to contain all aspects of the development including - (i) buildings and structures; (ii) infrastructure; (iii) recreation facilities, such as swimming pools or tennis courts; (c) identify the extent of area required for on-site wastewater treatment and disposal, where in an area not serviced by reticulated sewer.	**P4.**	(1) No probable solution identified. **Note -** Refer to Part 11, Planning Scheme Policy 9 - Infrastructure Works, Chapter 3 - Reconfiguration for further information on Development Envelopes.
S5.	Standard Format Reconfiguration that incorporates a Community Management Statement - (1) Reconfiguration involving a Community Management Statement provides - (a) an alternative titling system; (b) individual lots that are of an adequate size and dimension for the siting and construction of buildings and structures; (c) common property that is located and designed to - (i) offer protection to residents from hazards, specifically bushfire, flood or landslide; (ii) cater for communal infrastructure including - a. accessways and driveways; b. stormwater management systems; c. water supply for bushfire; (iii) protect areas with	**P5.**	(1) No probable solution identified.

Assessable Development			
Specific Outcomes		Probable Solutions	
	environmental values; (iv) provide opportunities for social interaction and recreation;		
	(2) Internal accessways and driveways in Community Management Statement reconfiguration are designed to clearly indicate their function and provide acceptable levels of access, safety, amenity and convenience for users, as well as catering for vehicle parking and service vehicles;		(2) Internal accessways are designed in accordance with Schedule 1 - Access and Parking - Table 3 - Internal Accessways for Community Management Statement;
	(3) In the Urban Residential, Medium Density Residential, Low Density Residential and Park Residential Zones - Community Management Statement reconfiguration offers opportunities to - (a) provide for alternative titling systems; (b) increase environmental outcomes; (c) provide greater choice in communal living opportunities; (d) provide an increased range of recreational and social interaction opportunities within the development; or		(3) Lot size and frontage widths comply with Lot Sizes - Table 1 for the relevant zone; or
	(4) In the Environment Protection Zone and Rural Non-Urban Zone - excluding sub-areas RN1, RN2 and RN3 - Community Management Statement reconfiguration allows for enhanced environmental outcomes together with opportunities for co-operative arrangements for the owning, leasing or operating of rural activities by providing incentives for this titling system in the form of increased densities where - (a) individual lots form a development cluster; (b) all other land is retained as common property; (c) each individual lot has one boundary adjoining another individual lot; (d) no lots have direct access to the public road frontage; or		(4) Provide for increased densities by - (a) each individual lot having at least one adjoining boundary with another individual lot; (b) no individual lot having direct access to a public street frontage; (c) the initial lot size being greater than 20 hectares; (d) individual lots being a maximum of 4000m^2; (e) resulting density being 1 individual lot per 7.5 hectares; (f) all land, other than the individual lots, being held as common property; or
	(5) In the Conservation Zone - excluding sub-areas CN1 and CN2 - Community Management Statement reconfiguration allows for enhanced environmental		(5) Provide for increased densities by - (a) each individual lot having at least one adjoining boundary with another individual lot;

Assessable Development			
Specific Outcomes		**Probable Solutions**	
	outcomes where - (a) individual lots form a development cluster; (b) all other land is retained as common property; (c) each individual lot has one boundary adjoining another individual lot; (d) no lots have direct access to the public road frontage.		(b) no individual lot having direct access to a public street frontage; (c) the initial lot size being greater than 40 hectares; (d) individual lots being a maximum of 4000m^2; (e) resulting density being 1 individual lot per 10 hectares; (f) all land, other than the individual lots, being held as common property.
S6.	Reconfiguration by Building Format Plan - (1) Reconfiguration - (a) relates to the titling of existing or approved use; (b) does not create a situation where the existing use of the land becomes unlawful as a result of the reconfiguration.	**P6.**	(1) No probable solution identified.
S7.	Boundary Realignment - (1) If rearranging boundaries of a lot, the useability of and access to all lots affected is improved or maintained.	**P7.**	(1) Boundary realignment - (a) where involving lots with areas and frontage less than those indicated in Table 1, the resulting lots does not reduce the area of any lot by greater than 10 percent; (b) improves the existing situation to result in - (i) the lot having a frontage to depth ratio that is greater than the existing lot; or (ii) access being provided or improved to a lot that previously had no access or access in a location that was constrained by slope, drainage or similar hazard.
S8.	Volumetric Reconfiguration - The reconfiguration of the space above or below the surface of the land is required to facilitate efficient development in accordance with the zone in which it is located.	**P8.**	No probable solution identified.
S9.	Easements - Reciprocal easements are established for internal lots that ensure individual or communal	**P9.**	No probable solution identified.

Assessable Development			
Specific Outcomes		**Probable Solutions**	
	access, utility infrastructure, stormwater drainage and other matters are fully addressed.		
S10.	Entry Statements - (1) Where it is intended to incorporate an entry statement to an existing or proposed development, the entry statement - (a) is located wholly within the property being reconfigured; (b) does not obstruct sight lines to the road(s) accessing the estate; (c) is an architectural feature that reflects the character of the estate; (d) is designed for low maintenance; (e) does not incorporate gates.	**P10.**	(1) No probable solution identified. **Note -** The local government does not support 'gated' estates.

Diagram 1 - Graphical Representation of the SEQ Regional Plan 2005 - 2026

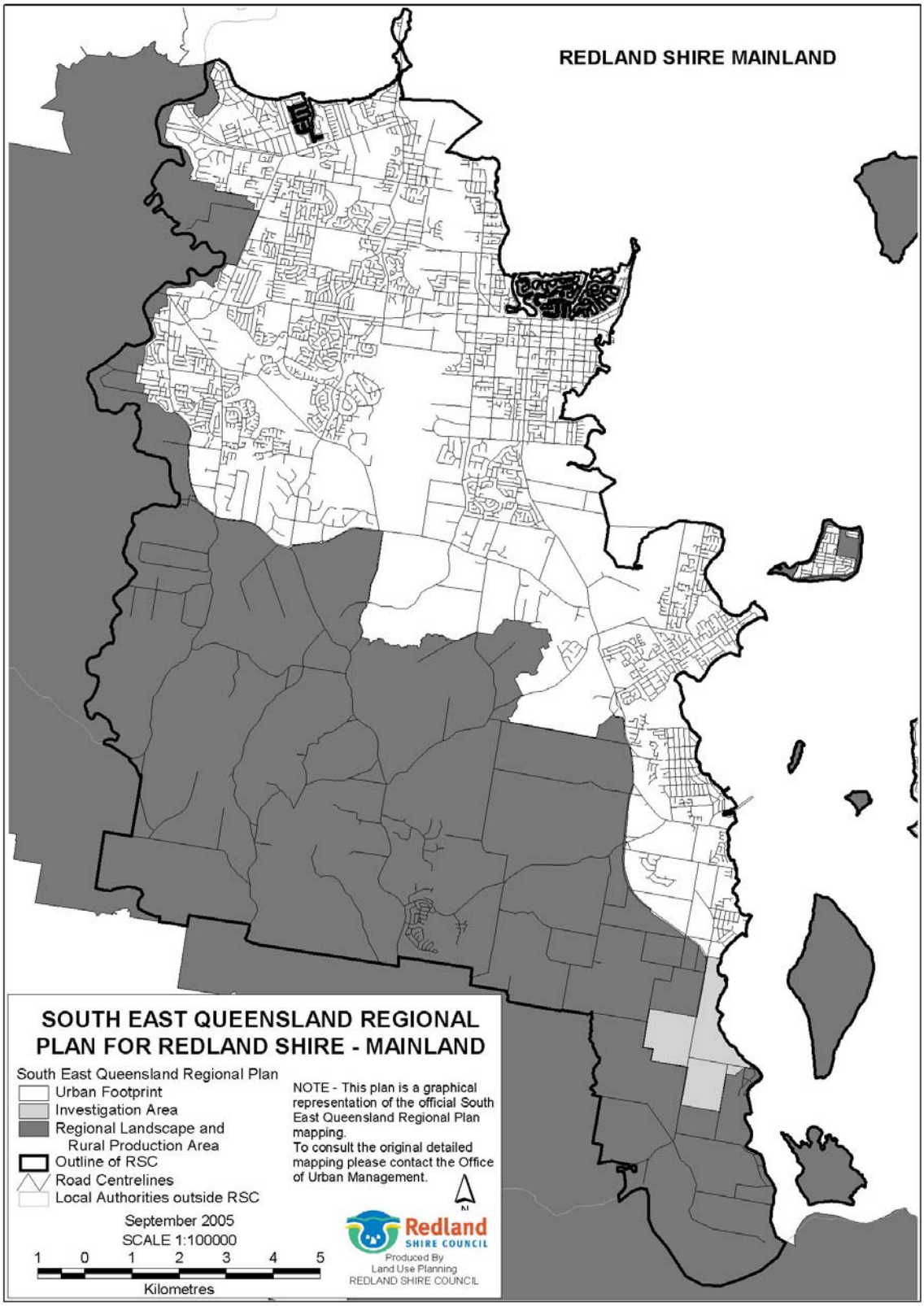

Table 1 - Creating Lots by Standard Format Plan, whether or not having a Community Management Statement

Sub-Areas	Lot Type	Minimum Lot Area Range	Minimum Lot Frontage/ Width
Urban Residential Zone			
Including sub-area UR1 and UR2	**Standard** (refer to Diagram 1 - Standard Lot in Urban Residential Zone)	■ 500-700m^2	■ Not specified
	Small Lot	■ 400-499m^2 (for minor reconfigurations) ■ 350-499m^2 (for major and medium reconfigurations)	■ 10 meters
	Corner	■ 800m^2	■ 20 metres - including any truncation
	Internal (refer to Diagram 3 - Internal Lot in Urban Residential Zone)	■ 800m^2 excluding accessway; or ■ 700m^2 excluding accessway and where having a boundary greater than 15 metres adjoining the Open Space Zone	■ Street front lot - 18 metres including any truncation; ■ Accessway - ▸ one internal lot - 4.5 metres; or ▸ two internal lots - 6 metres; ■ Where the resulting internal lot is capable of further reconfiguration under this planning scheme a 6 metre wide accessway is provided regardless of the number of lots being created
	Irregular (refer to Diagram 2 - Irregular Lot in Urban Residential Zone)	■ Minimum lot area excluding accessway, where the accessway provides the only street frontage - as per standard lot; ■ Containing a 15 x 25 metre rectangle suitable for building	9 metres at the front building line
Sub-area UR3 - Amity Point	Inconsistent in this sub-area		
Medium Density Residential Zone			
Including sub-area MDR1, MDR2 and MDR3	**Standard and Corner**	1200m^2	25 metres including any truncation

Sub-Areas	Lot Type	Minimum Lot Area Range	Minimum Lot Frontage/ Width
	Internal	Not preferred - amalgamate to facilitate standard or corner lots of the required size	
	Irregular	Not preferred	
Low Density Residential Zone			
	Standard	2000m^2	30 metres including any truncation
	Corner		
	Internal	2000m^2 - excluding accessway	■ Street front lot - 20 metres including any truncation; ■ Accessway - ▸ one internal lot - 4.5 metres; or ▸ two internal lots - 6 metres; ■ Where the resulting internal lot is capable of further reconfiguration under this planning scheme a 6 metre wide accessway is provided regardless of the number of lots being created
	Irregular	■ Minimum lot area excluding accessway, where the accessway provides the only street frontage - as per standard lot; ■ Containing a 20 x 30 metre rectangle suitable for building	15 metres at the front building line
SMBI Residential Zone			
Including sub-area SR1	Inconsistent in this zone		
Emerging Urban Community Zone			
	Inconsistent in this zone		
Investigation Zone			
	Inconsistent in this zone - except where complying with Part H - Regulatory Provisions of the *SEQ Regional Plan 2005 - 2016*		

Sub-Areas	Lot Type	Minimum Lot Area Range	Minimum Lot Frontage/ Width
Point Lookout Residential Zone			
	Standard	■ 500-700m^2; or ■ For small lot - 350 - 499m^2	■ 18 metres; or ■ For small lot - 14 metres
	Corner	■ 800m^2	20 metres
	Internal	■ 800m^2 - excluding accessway; or ■ 700m^2 - excluding accessway and where having a boundary greater than 15 metres adjoining the Open Space Zone	■ Street front lot - 18 metres including any truncation; ■ Accessway - ▸ one internal lot - 4.5 metres; or ▸ two internal lots - 6 metres; ■ Where the resulting internal lot is capable of further reconfiguration under this planning scheme a 6 metre wide accessway is provided regardless of the number of lots being created.
	Irregular	■ Minimum lot area excluding accessway, where the accessway provides the only street frontage - as per standard lot; ■ Containing a 15 x 25 metre rectangle suitable for building	9 metres at the front building setback
Point Lookout Tourist Zone			
Including sub-areas PT1 - 7	Inconsistent in this zone		
All Centre Zones			
Including all sub-areas - except those listed below	■ Lot size as required to - ▸ comply with the overall outcomes of the zone; ▸ facilitate uses proposed in these zones; ▸ maintain or enhance social and economic values		
Local Centre - sub-area LC1	Inconsistent in this sub-area		

Sub-Areas	Lot Type	Minimum Lot Area Range	Minimum Lot Frontage/ Width
Commercial Industry Zone			
Including sub-area CM1	Standard and Corner	1000m^2	25 metres
	Internal	1000m^2	■ Street front lot - 15 metres ■ Accessway - 10 metres
	Irregular	Not preferred	
General Industry Zone			
Including sub-area GL1 and sub-area GL2	Standard and Corner	4000m^2	40 metres
	Internal	4000m^2	■ Street front lot - 30 metres ■ Accessway - 10 metres
	Irregular	Not preferred	
Island Industry Zone			
Including sub-area IS1	■ Lot size as required to - ▸ comply with the overall outcomes of the zone; ▸ facilitate uses proposed in this zone; ▸ maintain or enhance economic values		
Marine Activity Zone			
Including sub-areas MA1 and MA2	■ Lot size as required to - ▸ comply with the overall outcomes of the zone; ▸ facilitate uses proposed in this zone; ▸ maintain or enhance economic values		
sub-area MA3	Inconsistent in this sub-area		
Rural Non-Urban Zone			
Including sub-areas RN1 and RN2	Standard, Corner and Irregular	20 hectares	100 metres
	Internal	20 hectares	■ Street front lot - 100 metres ■ Accessway - 10 metres
Sub-area RN3	Inconsistent in this sub-area		
Park Residential Zone			
	Standard, Corner and Irregular	6000m^2	40 metre
	Internal		■ Street front lot - not specified; ■ Accessway - ▸ one internal lot - 6 metres; or ▸ two internal lots - 10 metres

Sub-Areas	Lot Type	Minimum Lot Area Range	Minimum Lot Frontage/ Width
Environmental Protection Zone			
	Standard, Corner and Irregular	20 hectares	Not specified
	Internal		■ Street front lot - 100 metres ■ Accessway - 10 metres
Conservation Zone			
Excluding sub-areas	Standard, Corner and Irregular	40 hectares	Not specified
	Internal		■ Street front lot - 100 metres ■ Accessway - 10 metres
In sub-areas CN1 and CN2	(2) Inconsistent in these sub-areas, except where - (a) required to transfer land into the ownership of the local government; (b) to maintain and enhance environmental values		
Community Purposes Zone			
Including all sub-areas	■ Lot size as required to - ▸ comply with the overall outcomes of the zone; ▸ facilitate uses proposed in the zone; ▸ maintain or enhance economic values		
Open Space Zone			
	■ Inconsistent in this zone, except where - ▸ required to transfer land into the ownership of the local government; ▸ to maintain and enhance social and recreational values		

Diagram 1 - Standard Lot in Urban Residential Zone -
Lot size and frontage width will vary depending on the relevant zone.

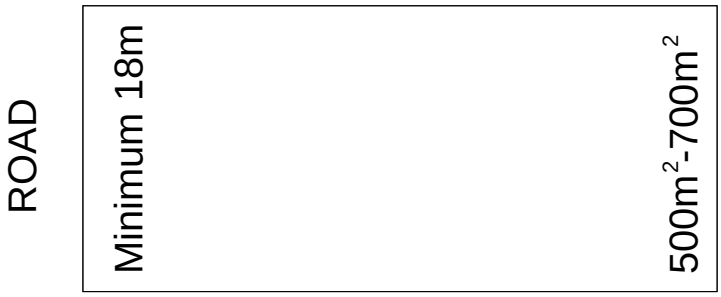

Diagram 2 - Irregular Lot in Urban Residential Zone -
Size of rectangle and lot frontage at front building line will vary depending on the relevant zone.

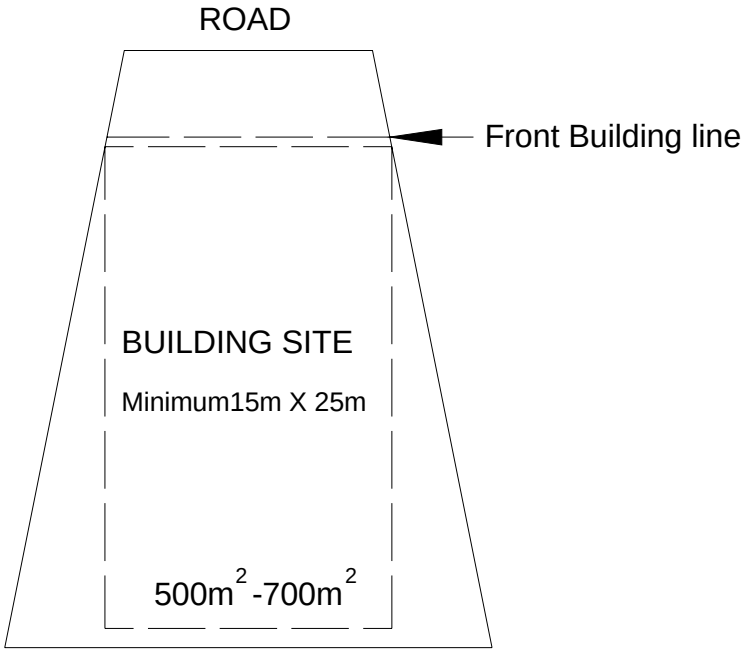

Diagram 3 - Internal Lot in Urban Residential Zone -
Size of internal lot, frontage width of street front lot and accessway width will vary depending on the relevant zone.

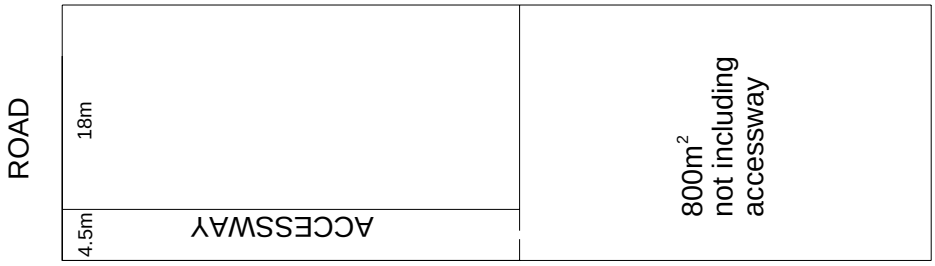

this page purposely
left blank

Part 8 - General Codes

Note -

Summary of General Codes.

General Codes

- Access and Parking
- Centre Activity
- Centre Design
- Commercial Industry Activity
- Development Near Underground Infrastructure
- Erosion Prevention and Sediment Control
- Infrastructure Works
- Landscape
- Stormwater Management

General Codes Summary

this page purposely
left blank

Division 1 - Access and Parking

8.1.1 Introduction

(1) This division contains the provisions for the Access and Parking Code, that incorporates -

(a) Compliance with the Access and Parking Code (section 8.1.2);

(b) Overall Outcomes of the Access and Parking Code (section 8.1.3);

(c) Specific Outcomes and Probable Solutions applicable to Assessable Development (section 8.1.4).

8.1.2 Compliance with the Access and Parking Code

(1) Development that is consistent with the specific outcomes in section 8.1.4 complies with the Access and Parking Code.

Note -

The following planning scheme policies will assist in achieving specific outcomes within the Access and Parking Code -

- Planning Scheme Policy 3 - Contributions and Security Bonding;
- Planning Scheme Policy 9 - Infrastructure Works.

8.1.3 Overall Outcomes of the Access and Parking Code

(1) The overall outcomes are the purpose of the Access and Parking Code.

(2) The overall outcome sought for the Access and Parking Code is the following -

(a) to ensure -

(i) provision of safe and convenient vehicular access to development;

(ii) efficiency of vehicle movements in the movement network is maintained;

(iii) development is provided with safe and functional on-site parking that meets user needs;

(iv) car parking areas and structures are well located and designed to be compatible with the local character;

(v) provision of servicing and manoeuvring areas that facilitate clear and safe internal on-site vehicle movements and allow access for service vehicles.

8.1.4 Specific Outcomes and Probable Solutions applicable to Assessable Development

Assessable Development			
Specific Outcomes		**Probable Solutions**	
S1.	Off-Street Parking - (1) Uses and other development provide off-street vehicle parking that - (a) is clearly defined, safe and easily accessible; (b) takes into consideration - (i) the type and size of development; (ii) expected resident, employee and customer movements; (iii) the location of the use; (iv) the capacity of the existing road network to accommodate on-street parking; (v) access to public transport; (c) includes dedicated parking spaces for - (i) people with a disability; (ii) motor cycles and bicycles; (d) where on SMBI or NSI - incorporates the number of spaces determined by the local government on the basis of the location and nature of the use. **Note -** ■ For information on where car parking requirements may be decreased at the discretion of the local government, refer to Planning Scheme Policy 3 - Contributions and Security Bonding. ■ Credit is given for parking spaces for an existing lawfully established use where development is for a tenancy change. Refer to explanatory note to Table 1 in Part 9 - Schedule 1 - Access and Parking.	**P1.**	(1) Uses and other development - (a) comply with Part 9 - Schedule 1 - Access and Parking - Table 1 - Minimum On-Site Vehicle Parking Requirements; (b) where vehicle access requirements to a lot or premises reduces the number of on-street spaces, the number of off-street parking spaces required by P1.1(a) is increased by the number of on-street spaces lost; (c) where vehicle parking requirements exceed 5 car parking spaces, provide vehicle parking facilities for persons with a disability - (i) at the rate of 1 car parking space per 50 spaces with a minimum of 1 space; (ii) at a rate in excess of P1.1 (i) where for a use that is likely to generate a higher demand for disabled parking spaces; (iii) in accordance with *Australian Standard 2890.2: 2004 - Parking Facilities - Off-Street Parking*; (d) where a shop with more than 2000m^2 gross leaseable area - provide motorcycle parking spaces at a rate determined by the local government.
S2.1	On-street Parking - (1) On-street resident and visitor parking is provided according to projected needs, taking into account - (a) total parking demand; (b) parking opportunities within	**P2.1**	(1) On-street parking - (a) for dwelling houses, small lot houses and dual occupancies is provided within the carriageway at a rate of one parking space per dwelling

Assessable Development			
Specific Outcomes		**Probable Solutions**	
	the lot or premises; (c) non-residential and external parking generators; (d) road reserve and lot widths; (e) driveway locations		unit; (b) for all other uses - no probable solution identified; (c) in addition to P2.1(1)(a) - is provided in proximity to open space areas and community facilities
S2.2	(1) The carriageway width, verge width and driveway dimensions allow for unobstructed and efficient access to properties when a vehicle is parked on the opposite side of the road.	**P2.2**	(1) On-street parking - (a) in culs-de-sac and in locations where lot frontages are less than 15 metres incorporates indented bays or other on-street parking provisions; (b) is enhanced by locating driveway entrances a minimum of 10 metres apart.
	Driveway Location and Design -		
S3.1	(1) Driveways are located having regard to the following - (a) optimising public safety and convenience; (b) characteristics of the frontage road including - (i) road type; (ii) road target speed; (iii) traffic volumes; (iv) vertical and horizontal geometry; (v) queue and turn lane lengths; (c) where the site is bounded by more than one street frontage, the secondary street provides the main vehicle entry/exit point; (d) location of existing utility infrastructure, such as power poles, street lighting, gully pits and the like; (e) location of existing bus stops, taxi ranks, traffic control devices; (f) pedestrian and cycle paths and crossings; (g) maintaining on-street parking; (h) ensuring adequate visibility between vehicles on a driveway and pedestrians on the verge; (i) reconfiguration, whether or not including a community management statement, allows for lots to be truncated at accessways and on corner lots and fencing and landscaping reduced in these truncated areas to ensure	**P3.1**	(1) Driveway location and design - (a) complies with Part 9 - Schedule 1 - Access and Parking - Table 2 - Driveway Access Location; (b) limits the straight alignment of a driveway to a maximum of 20 metres; (c) maintains sight distances by - (i) for industrial, centre, community or other large scale uses, and for driveways to car parking areas associated with residential or tourist uses, complying with *Australian Standard 2890.1: 2004 - Parking Facilities - Off-Street Car Parking*; or (ii) for other residential uses including dual occupancies, dwelling houses and small lot houses - a. splaying the fence at 45 degrees; or b. reducing the fence height to 1.2 metres; or c. incorporating a mixture of these treatments; or (iii) for reconfiguration that results in a road frontage lot creating 1 or 2 internal lots - a. the road frontage lot is truncated at the junction of the front boundary and the

Assessable Development			
Specific Outcomes		**Probable Solutions**	
	clear visibility between driveways and the verge; (j) location of street trees existing in the road reserve; (2) The maximum number of driveways accessing a lot or premises is one, unless it can be shown that multiple driveways will improve ingress/egress, internal traffic operation, and pedestrian safety.		accessway for a distance of 1 metre along the frontage and 5 metres along the accessway; b. fencing in the truncated area is no greater than 1.2 metres high to ensure clear sight lines to the verge; or (iv) for reconfiguration that results in numerous lots and includes internal lots - a. incorporating a truncation of 1 x 5 metres on each side of the accessway on access or higher order roads; b. where there are two adjoining internal lots created, a common accessway serves both lots and incorporates a truncation of 1 x 5 metres on each side of the accessway; (d) is not within the approach and exit areas of a bus stop; (2) No probable solution identified. **Note -** The requirements of Main Roads must be achieved when on a state controlled road.
S3.2	(1) Access to trunk collector, sub-arterial and arterial roads is restricted to optimise the function and efficiency of those roads through - (a) ensuring that where the lot or premises adjoins a trunk collector, sub-arterial or arterial road, all vehicles are able to enter and leave the lot or premises in a forward direction; (b) restricting access to sub-arterial and arterial roads to left in/left out traffic movements through construction of a raised centre median that limits right turns in/out of the site; (c) ensuring median breaks do not occur on sub-arterial and	**P3.2**	(1) No probable solution identified. **Note -** ■ Refer to Part 9 - Schedule 6 - Movement Network and Road Design for further information on the function of trunk collector, sub-arterial and arterial roads. ■ Road widening and resultant land dedication may be necessary for the introduction of a median and/or left/right turn land for access to uses and other development.

Assessable Development			
Specific Outcomes		**Probable Solutions**	
	arterial roads to provide ingress/egress to private property, except where - (i) the entrance/exit is a public street; (ii) the spacing of major intersections is considered satisfactory for current operations and does not prejudice plans for future traffic control; (iii) the disruption to through traffic would be greater without the median break than it would be if no break were provided; (d) providing an indented right turn lane where a median break is constructed; or (e) providing a passing lane or turn lane where the road does not have a central median and right turn access is proposed.		
S3.3	(1) Access to uses and other development in centres (a) is suitable to the location and enhances the function of the centre; (b) incorporates shared access arrangements or amalgamations of smaller lots; (c) ensures that driveways across footpaths carrying high pedestrian and cyclist volumes are only provided where it can be demonstrated that pedestrian and cyclist priority is not threatened.	**P3.3**	(1) No probable solution identified.
S4.	Driveway Crossovers - (1) Driveways are designed for the - (a) volume of traffic generated by the use; (b) road type to which access is required; (c) existing and predicted future traffic volumes of the road to which access is sought; (d) number of car parking spaces served by the driveway; (e) size of the largest vehicle likely to use the driveway on a regular basis; (f) number of service bays served by the driveway; (2) Driveway crossovers and their	**P4.**	(1) Driveway - (a) crossovers - (i) for dual occupancies, dwelling houses and small lot houses comply with Standard Drawings RRSC-2, RRSC-16 or RRSC-17 depending on the verge design; or (ii) for aged persons and special needs housing, apartment buildings, mobile home parks and multiple dwellings comply with Standard Drawings RSC-3; or

Assessable Development			
Specific Outcomes		**Probable Solutions**	
	splays/kerb tapers do not protrude across adjoining property boundaries. **Note -** ■ Refer to Planning Scheme Policy 9 - Infrastructure Works for further information in achieving this specific outcome. ■ Refer to Part 7 - Division 4 - Domestic Driveway Crossover Code, for design requirements relating to driveway crossovers for a dwelling house, dual occupancy or small lot house.		(iii) for industrial and commercial uses comply with Standard Drawings R-RSC-4; (b) crossfall is not more than - (i) 3 percent different to the slope of the kerb and channel at the location of the driveway; or (ii) where there is no kerb and channel - a. 3 percent different to the slope from the centreline of the road; or b. 10 percent where the slope from the centreline of the road is greater than 13 percent; (2) No probable solution identified.
S5.	Internal Accessways for Development with a Community Management Statement - Internal accessways are incorporated into the design of large residential developments in order to provide safe and efficient internal traffic operations, especially where service and waste collection vehicles are required to access the site.	**P5.**	Uses and other development comply with Part 9 - Schedule 1 - Access and Parking - Table 3 - Internal Accessways for Development with a Community Management Statement.
S6.	Queuing - (1) Driveways provide for queuing in order that internal and external traffic operations are not obstructed through ensuring that - (a) defined on-site queue areas do not conflict with internal intersections or manoeuvring areas; (b) where security gates are proposed at the entrance to the development - (i) the required queuing length is provided between the property boundary and the gate system; (ii) sufficient space is provided in front of the security gates to enable a car to manoeuvre and exit the site in a forward direction.	**P6.**	(1) Uses and other development - (a) comply with the queue requirements shown in Part 9 - Schedule 1 - Access and Parking - Table 4 - Minimum On-site Queuing Requirements in the absence of more reliable site specific data; (b) incorporate a queuing area with the following dimensions - (i) on-site single queuing lanes are a minimum of 3.6 metres wide with at least 300mm horizontal clearance provided on each side of the queuing lane; (ii) an adjoining breakdown lane/strip 2 metres wide is provided on one side of a single queuing lane; (iii) multiple queuing lanes are

Assessable Development			
Specific Outcomes		**Probable Solutions**	
	Note - ■ Security gates are only considered appropriate in relation to access to secure car parking areas and some industrial uses. ■ Entry queues are of primary importance since they have the potential to most readily obstruct external traffic operations, but exit queues can also disrupt internal circulating traffic thereby blocking entry lanes. ■ Refer to Part 6 - Division 9 - Drive Through Restaurants Code for further requirements regarding the location and design of drive through restaurants.		a minimum width of 3 metres each with at least 300mm horizontal clearance provided on either side of the queuing area; (c) provide additional internal queuing space for vehicles, where for - (i) a drive-in takeaway facility associated with a fast food store, a minimum of 10 vehicle spaces is provided; or (ii) a hotel drive-in bottle shop, a minimum of 12 vehicle spaces is provided.
S7.1	Vehicle Parking Areas and Structures - (1) Vehicle parking areas and structures are designed to - (a) provide a clear internal movement hierarchy; (b) discourage high vehicular speed and short-cutting; (c) be clearly distinguishable from pedestrian entries and paths; (d) be easily negotiated by vehicles and pedestrians, including persons with a disability; (e) ensure vehicles do not reverse into areas of high pedestrian activity; (f) ensure traffic congestion does not adversely affect the external traffic system; (g) optimise safety and security of users.	**P7.1**	(1) The layout of car parking areas and structures - (a) complies with the internal movement system as illustrated in Diagram 1 - Internal Movements in Car Parking Areas and includes - (i) circulation road; (ii) circulation aisle; (iii) parking aisle; (iv) parking spaces; (b) ensures that where a service area is accessed through the car parking area or structure, the service aisle is directly accessed from the circulation aisle and not from other elements of the internal movement system; (c) incorporates separators between parking rows which include planted landscaping; (d) ensures that where wheel stops are used - (i) they are located 500mm from the closed end of the parking space; (ii) have no obstructions higher than 100mm within the 500mm overhang area; (iii) the area of the overhang does not form part of the landscaped area; (e) avoids dead end aisles; (f) avoids cross intersections, especially between car parking and service areas;

Assessable Development			
Specific Outcomes		Probable Solutions	
			(g) orientates access aisles such that they intersect with circulation roads and circulation aisles at angles greater than 75 degrees; (h) orientates parking aisles at a right angle to the main building frontage - refer to Diagram 2 - Parking Bay Alignment; **Note -** Car parking at right angles to the building frontage allows greater vision of pedestrians and other vehicles when entering and exiting parking aisles and minimises the necessity for pedestrians to move across multiple parking aisles. (i) incorporates circulation roads which comply with Part 9 - Schedule 1 - Access and Parking - Table 5 - Minimum Circulation Road Width in Car Parking Areas; (j) maintains gradients in car parking areas and structures which - (i) comply with Part 9 - Schedule 1 - Access and Parking - Table 6 - Maximum Longitudinal Grades in Car Parking Areas; (ii) are above the minimum gradient which is defined by drainage requirements and depends on the type of surface and its roughness; **Note -** Refer to *Australian Standard 2890.1: 2004 - Parking Facilities - Off Street Car Parking* for further information regarding minimum gradient in car parking areas. (k) incorporates car parking spaces that - (i) comply with Part 9 - Schedule 1 - Access and Parking - Table 7 - Minimum Car Space Widths; (ii) are 5.4 metres in length, except for small car

Assessable Development			
Specific Outcomes		**Probable Solutions**	
			spaces and parallel parking spaces; (iii) if parallel parking spaces, are a minimum of 6 metres in length, except where - a. the space is at the open end of the row of spaces - a minimum of 5.4 metres; or b. the space is closed by a kerb at one end - a minimum of 6.3 metres; or c. enclosed by a kerb at both ends - a minimum of 6.6 metres; (iv) where the side boundary of the car parking space is adjacent to an obstruction greater than 150mm high that restricts doors from opening, 300mm is added to the width of the space outlined in Part 9 - Schedule 1 - Access and Parking - Table 7 - Minimum Car Space Widths; (v) do not have a gradient across them that exceeds 5 percent (1 in 20).
S7.2	(1) Parking areas are designed to - (a) provide a progressive reduction in speed between the external road and internal parking spaces; (b) ensure lower speeds near areas of high pedestrian activity through the use of appropriate road geometry or devices designed to limit speed; (c) maintain sight distances which are appropriate for the likely operating speeds in all areas of potential pedestrian/vehicle and vehicle/vehicle conflict; (2) A clearly defined pedestrian network is provided that - (a) is located in areas where people will choose to walk; (b) ensures that pedestrian movement through car parking areas or structures are along aisles rather than	**P7.2**	(1) At locations where pedestrian and vehicle conflicts are likely to occur - (a) sight distances of at least 2.5 seconds of travel time at the designated speed are provided; (b) splayed corners on structures are incorporated; (c) landscaping is designed to allow clear views; (d) sign placement ensures that views are not impeded; (2) In large open car parks with greater than 200 car parking spaces, a pedestrian path between parking spaces is provided on every second aisle; (3) No probable solution identified; (4) Lighting is provided in accordance with *Australian Standard 1158.1:1997 - Road Lighting - Vehicular Traffic (Category V) Lighting - Performance Installation and Design Requirements*.

Assessable Development			
Specific Outcomes		**Probable Solutions**	
	across them; (3) Provision is made for pedestrian and vehicular queues at conflict points; (4) Parking areas are lit to provide security for night-time users.		
S7.3	(1) Vehicle and pedestrian exits and main routes are clearly sign-posted to allow casual users to easily find their way around; (2) Signage - (a) being directional, regulatory, warning or informative and incorporating approved pavement markings, is erected on-site to - (i) control traffic movement and driver behaviour; (ii) warn of any potential safety hazards; (b) is provided on-site to clearly indicate the existence and location of access points to car parking areas where - (i) parking areas are located at the rear of the development; or (ii) access to the car parking area is not from the main road frontage; or (iii) there are multiple access points serving different car parking areas; or (iv) visitor parking is provided for housing and is not visible from the frontage road or access driveway; or (v) access/egress is via one-way driveways; (c) where development is expected to generate vehicular movements during hours of darkness incorporates self-illuminated and/or reflector signs.	**P7.3**	(1) No probable solution identified; (2) No probable solution identified.
S7.4	(1) Car parking areas are landscaped to - (a) provide shade; (b) maximise infiltration of stormwater run-off; (c) define parking areas; (d) reduce direct visibility of car parking areas from external viewpoints; (e) soften views of hardstand areas.	**P7.4**	(1) No probable solution identified. **Note -** Refer to Part 8 - Division 8 - Landscape Code for further information to achieve this specific outcome.

Assessable Development			
Specific Outcomes		**Probable Solutions**	
S7.5	(1) Car parking structures are designed and located so as not to dominate the streetscape or undermine the character and visual amenity of the area and - (a) ground floor car parking structures are located behind active frontages and people orientated facilities; (b) above ground car parking structures are - (i) located above or at the rear of retail or commercial uses; (ii) designed, finished and landscaped to complement the building design; (iii) designed to avoid ramps or strong horizontal and vertical features dominating the building façade; (c) openings in the car parking structure facade optimise internal surveillance while concealing parking operations as much as possible; (d) stairwells and elevators are clearly visible and potential entrapment areas are eliminated.	**P7.5**	(1) Car parking structures - (a) have a maximum frontage to a public street, whichever is the lesser of - (i) 20 percent of the building frontage inclusive of driveways; or (ii) 10 metres; or (b) where below ground, do not extend more than 1 metre above the ground level; (c) maintain a minimum clearance height between the floor and any overhead obstructions of 2.5 metres; (d) maintain a minimum height clearance of 2.5 metres extending from the open end of all disabled car parking spaces to a point not less than 2.2 metres from the front of the parking space.
S8.	Servicing and Manoeuvring Areas - (1) Servicing and manoeuvring areas - (a) provide the space required for loading, unloading, waste collection, manoeuvring and queuing; (b) are located to eliminate on-street loading; (c) do not detract from the streetscape or visual amenity of the area; (d) are separated from areas of pedestrian movement within the premises or on adjoining premises; or (e) where requiring the sharing of internal roads or aisles by service vehicles and passenger vehicles are designed to cater for the queuing requirements of both; (f) design and site layout - (i) achieves adequate provision for on-site servicing that is clearly	**P8.**	(1) Servicing and manoeuvring areas - (a) comply with Part 9 - Schedule 1 - Access and Parking - Table 8 - Design Dimensions for Service Aisles and Loading/Unloading Bays; (b) have a minimum vertical clearance of 4.5 metres for waste collection vehicle manoeuvring for 7.1 metres for bin lifting; or (c) where the minimum vertical clearance is less than 4.5 metres for manoeuvring or 7.1 metres for bin lifting, a letter from the proposed waste collection contractor is provided giving full details of the proposed system; (d) where disposal of industrial or commercial liquid waste by discharge to road tankers is required the road tanker is able to park wholly on-site

Assessable Development			
Specific Outcomes		**Probable Solutions**	
	defined, safe and easily accessible; (ii) provides for the vehicle dimensions and turning paths for the design vehicles expected to use the lot or premises; (iii) enables vehicles to manoeuvre into a service bay when all other bays are occupied; (iv) are configured to allow the design vehicle to dock or park in a service bay with only one reverse movement; (v) where service vehicles are required to reverse into a loading dock, maintains the truck driver on the side of the turning movement; (vi) maintains clear access to waste containers for collection vehicles; (vii) ensures that service vehicles entering a site do not queue across footpaths or onto external roads; (viii) prevents any manoeuvring occurring within the defined queuing area; (ix) contains any potential adverse impacts of servicing within the lot or premises.		and comply with all other requirements of this probable solution; (e) do not incorporate changes of surface gradients which exceed 5 percent (1 in 20); or (f) where the surface gradient exceeds 5 percent (1 in 20), a grade transition is provided to prevent scraping of vehicles' undersides or structural damage to towing connections. **Note -** ■ Where the volume of service vehicle traffic is significant, servicing and manoeuvring areas are larger than the minimum in order to promote easier and more efficient vehicle movements. ■ Refer to Planning Scheme Policy 9 - Infrastructure Works for turning and manoeuvring templates. ■ Where evidence from the waste collection contractor indicates collection will occur outside normal service/delivery or business times, it may be permissible to allow waste collection vehicles to utilise service bays or parking spaces for access.

Diagram 1 - Internal Movements in Car Parking Areas

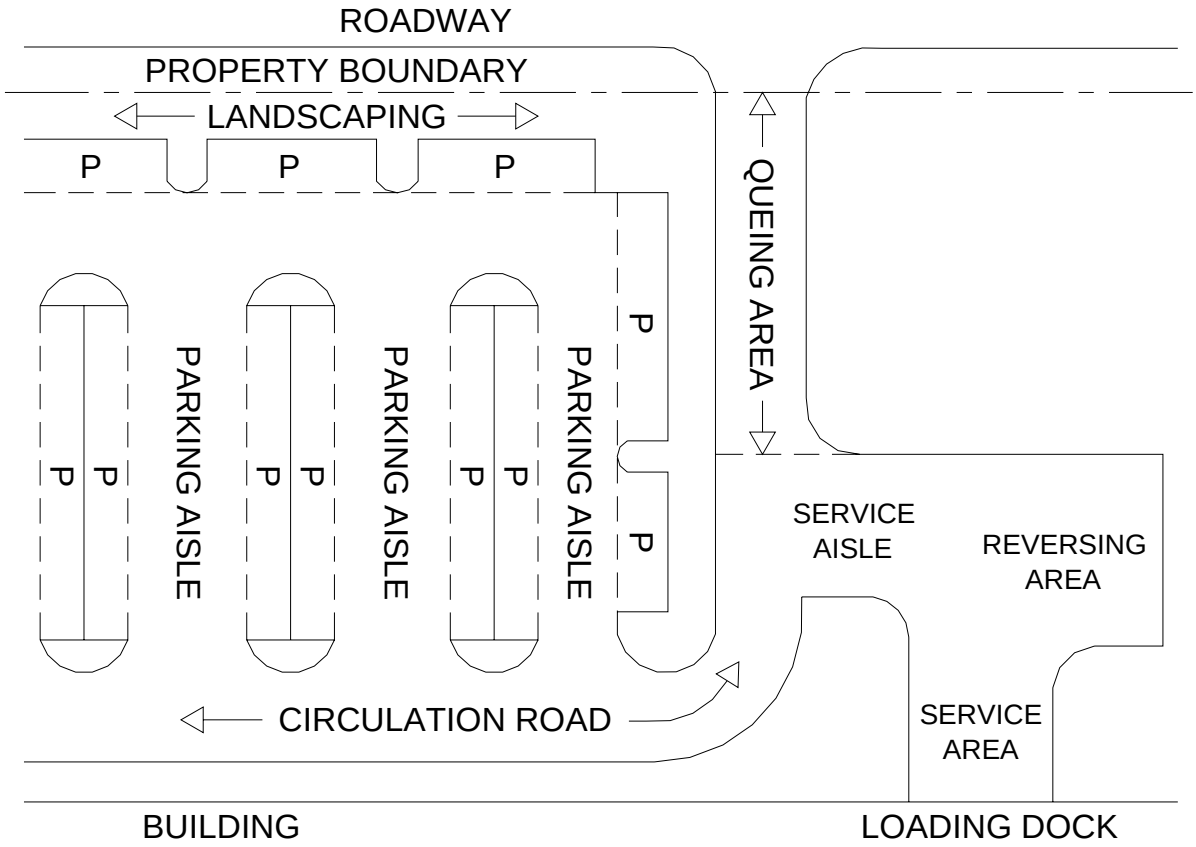

Diagram 2 - Parking Bay Alignment

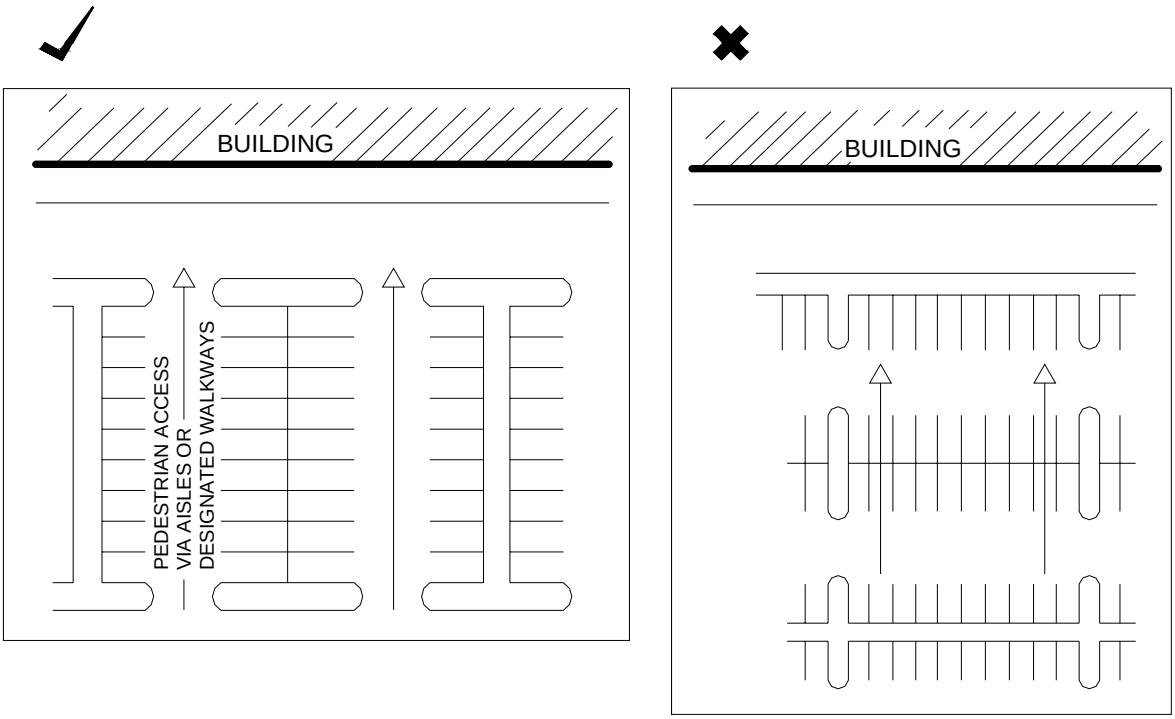

this page purposely
left blank

Division 2 - Centre Activity

8.2.1 Introduction

(1) This division contains the provisions for the Centre Activity Code, that incorporates -

(a) Compliance with the Centre Activity Code (section 8.2.2);

(b) Overall Outcomes of the Centre Activity Code (section 8.2.3);

(c) Acceptable Solutions applicable to Self-Assessable Development (section 8.2.4).

8.2.2 Compliance with the Centre Activity Code

(1) Self-assessable development that is consistent with the acceptable solutions in section 8.2.4 complies with the Centre Activity Code.

8.2.3 Overall Outcomes of the Centre Activity Code

(1) The overall outcomes are the purpose of the Centre Activity Code.

(2) The overall outcome sought for the Centre Activity Code is the following -

(a) to ensure the centre activity -

(i) facilitates the timely establishment of specified uses that require only minor building work to an existing premises;

(ii) has a scale, intensity and operation of the use of premises that is consistent with existing building floor space and infrastructure.

8.2.4 Acceptable Solutions applicable to Self-Assessable Development

Self-Assessable Development	
Acceptable Solutions	
A1.	(1) The centre activity is located in either the - (a) District Centre Zone; or (b) Local Centre Zone; or (c) Major Centre Zone; or (d) Marine Activity Zone sub-area MA1; or (e) Medium Density Residential Zone - (i) sub-area MDR1;or (ii) sub-area MDR3; or (f) Neighbourhood Centre Zone; or (g) Point Lookout Centre Zone; or (h) SMBI Centre Zone; (2) Is for a tenancy change only; (3) Involves only minor building work to an existing building; (4) Complies with Part 9 - Schedule 1 - Access and Parking - Table 1 - Minimum On-Site Vehicle Parking Requirements specified for the proposed use in terms of - (a) minimum number of parking spaces; (b) minimum design vehicle. **Note -** ■ If not self-assessable the use is to achieve the assessment criteria stated for that use in column 3 of the table of assessment for material change of use of premises for the relevant zone. ■ Credit is given for parking spaces already provided for the existing use provided that this use was lawfully established. Refer to explanatory note to Table 1 in Part 9 - Schedule 1 - Access and Parking.

Division 3 - Centre Design

8.3.1 Introduction

(1) This division contains the provisions for the Centre Design Code, that incorporates -

(a) Compliance with the Centre Design Code (section 8.3.2).

(b) Overall Outcomes for the Centre Design Code (section 8.3.3).

(c) Specific Outcomes and Probable Solutions applicable to Assessable Development (section 8.3.4).

8.3.2 Compliance with the Centre Design Code

(1) Development that is consistent with the specific outcomes in Section 8.3.4 complies with the Centre Design Code.

8.3.3 Overall Outcomes of the Centre Design Code

(1) The overall outcomes are the purpose of the Centre Design Code.

(2) The overall outcome sought for the Centre Design Code is the following -

(a) to ensure that the network of centres -

(i) are designed to be inviting, accessible, safe, comfortable and convenient to customers and employees;

(ii) exhibit an attractive built form integrated with high quality landscaping and streetscape works that contribute to the desired urban character of the centre;

(iii) achieve a high level of accessibility and convenience for pedestrians, cyclists, public transport and private vehicles;

(iv) make a positive contribution to the efficient and cohesive functioning of the centre.

8.3.4 Specific Outcomes and Probable Solutions applicable to Assessable Development

Assessable Development			
Specific Outcomes		**Probable Solutions**	
	Building Form and Design -		
S1.1	(1) The height buildings - (a) does not overwhelm of dominate the centre; (b) respects the desired streetscape; (c) ensures a high quality appearance when viewed from both within and external to the centre.	**P1.1**	(1) The height if the top of the floor slap of the highest habitable room is limited to the levels identified in Table 1 – Maximum Height to the Top of the Floor Level of Highest Habitable Room/Commercial Storey.
S1.2	Building design, streetscape, pedestrian paths and street front spaces promotes integration with the surrounding area and the rest of the centre.	**P1.2**	No probable solution identified
S1.3	(1) Buildings - (a) address the primary street frontage; (b) ensure main entrances front the street or public spaces that constitute the focal point of the centre; (c) do not focus principally on internal spaces or parking areas.	**P1.3**	(1) No probable solution identified.
P1.4	(1) Setbacks at ground level provide for - (a) connection between pedestrian paths and public places; (b) areas for convenient and comfortable movement of pedestrians; (c) standing areas at bus stops, taxi ranks and display windows; (d) the queuing of patrons at entertainment venues; (e) changes in the gradient of the street	**P1.4**	(1) Setbacks at ground level - (a) are clear of columns and other obstructions; (b) have a pavement matching the gradient of the adjoining footpath and connecting pedestrian areas on neighbouring sites; (c) connect without any lip or step to adjoining footpaths; (d) ensure steps, escalators, ramps or lifts are set back an additional 1.2m from the building setback to maximise pedestrian flow and safety and allow for adequate waiting space.
S1.5	(1) Automatic teller machines are located to - (a) maintain visibility with good sight lines and are well lit; (b) not in the vicinity of drinking fountains, seating or public telephones to avoid loitering or queuing conflicts.	**P1.5**	(1) Any automatic teller machine - (a) is set back an additional 1 metre from the building setback; (b) is well illuminated at all times; (c) includes a barrier to prevent queues forming across a footpath or pedestrian way.

Assessable Development			
Specific Outcomes		**Probable Solutions**	
P1.6	(1) A building located on a corner site, or a site with frontages to public places, or a site terminating important vistas, expresses and emphasises the importance of its location through - (a) architectural expression; (b) roof form; (c) building setbacks; (d) entrance location; (e) orientation; (f) decorative treatments.	**P1.6**	(1) No probable solution identified.
S1.7	(1) Buildings do not result in a reduction of views and vistas from public places to - (a) topographical ridge lines for example coastlines and the bay; (b) areas with environmental values; (c) public open space; (d) heritage listed buildings and places.	**P1.7**	(1) No probable solution identified.
	Detailed Building Design -		
S2.1	(1) Detailed building design - (a) enhances the visual amenity of the streetscape; (b) has a legible and attractive built form that is visually enhanced by architectural elements; (c) contributes to achieving and maintaining an attractive streetscape; (d) contributes to a distinctive and legible physical character for the centre; (e) integrates major landscape elements to maximise their aesthetic value and use, including planting at all levels, particularly above podium areas or low-level roof decks. (2) The building exhibits variation to the external appearance and shape of the built form to provide visual interest through - (a) surface decoration; (b) wall recesses and projections; (c) a variation of wall finishes, windows, balconies, awnings or other visible structural elements; (d) differentiating between the lower, middle and upper portions of the building by varying the façade	**P2.1**	(1) No probable solution identified; (2) No probable solution identified.

Assessable Development			
Specific Outcomes		**Probable Solutions**	
	appearance and/or shape of the built form, where comprised of two or more storeys.		
S2.2	(1) Roofs are attractive and are not characterised by a cluttered display of plant and equipment, in particular - (a) building caps and rooftops contribute to the architectural distinction of the building and create a coherent roofscape for the centre; (b) service structures, lift motor rooms and mechanical plant are designed as an architectural feature of the building or are screened; (c) the rooftop is designed to enable future inclusion of communication structures or telecommunication facilities in an unobtrusive manner.	**P2.2**	(1) No probable solution identified.
S2.3	(1) Windows and sun control are used in building form, in particular sun shading devices are provided to - (a) shade buildings; (b) reduce glare; (c) assist in maintaining comfortable indoor temperatures; (d) minimise heating loads; (e) conserve energy; (f) enrich the subtropical character; (g) provide texture to building façades.	**P2.3**	(1) No probable solution identified.
S2.4	(1) Buildings are finished with high quality materials, selected for their - (a) contribution to the character of the centre; (b) easy maintenance, durability and ability not to readily stain, discolour or deteriorate; (2) Buildings do not incorporate any type of glass or other surface likely to reflect specular rays that could create nuisance, discomfort or hazard to any part of the centre or surrounding locality.	**P2.4**	(1) No probable solution identified; (2) No probable solution identified.
S2.5	(1) The architectural treatment of façades and elevations avoids large blank walls and openings, and setbacks are used to	**P2.5**	(1) Façades are designed to ensure - (a) the length of a blank wall above ground level without variation, articulation or

Assessable Development			
Specific Outcomes		**Probable Solutions**	
	articulate vertical building surfaces and contribute positively to the streetscape.		openings is no more than 10m to all frontages; (b) semi-enclosed spaces and colonnades are provided at the ground level of buildings abutting pedestrian routes, through the use of awnings, pergolas or other devices that may be suspended, freestanding, supported on columns or cantilevered.
	Public Places -		
S3.1	(1) Building façades that face public places at ground floor level - (a) complement the appearance of the development and the surrounding streetscape; (b) enhance the visual amenity of the public place; (c) include a variety of human scale architectural elements and details; (d) facilitate pedestrian movement between the public space and the development; (e) provide opportunity for the casual and convenient surveillance of public space from within the development.	**P3.1**	(1) Building façades at the ground floor storey of development that face public places are designed to ensure - (a) a minimum of 50 percent of the façade area is comprised of windows, wall openings or shop-fronts that permit the casual surveillance of the public space from the development; (b) a visually prominent main entrance that faces the principal public space; (c) prominent architectural elements and details are incorporated at 3 metre or less intervals along the length of the façade.
S3.2	Landscaped pedestrian scale places are provided for public use at ground level and extend the landscape character into the building.	**P3.2**	No probable solution identified.
S3.3	(1) All pedestrian places are designed and constructed to reinforce the character of the centre and to promote its useability ensuring - (a) external pedestrian scale places offer a variety of passive recreational opportunities and experiences ranging from intimate seating to open plazas including features to enhance their use and enjoyment, such as food outlets, tables and chairs, seating, ledges, shade structures and artwork; (b) street furniture, including seats, bollards, grates, grills, screens and fences, bicycle racks, flag poles, banners, litter bins, telephone booths	**P3.3**	(1) No probable solution identified. **Note -** To assist in achieving S3.3 refer to Planning Scheme Policy 17 - Streetscape Design Manuals.

Assessable Development			
Specific Outcomes		**Probable Solutions**	
	and drinking fountains are coordinated with other elements of the streetscape; (c) tactile surface treatments are used to promote interest and variety in the centre and to aid people with sensory disabilities.		
S3.4	Centre activities respect the gradient changes within the centre. Buildings are designed to step with the contours to allow for continuous pedestrian access.	**P3.4**	Building form steps with gradient change and allows continuous public access to the building façade.
S4.	Parking - (1) Parking structures and access are designed and located to - (a) not detract from the character and visual attraction of the centre; (b) ensure it is not a dominant visual element of the centre, the site on which it is developed, or the streetscape; (c) incorporate uses at ground level that promote active street frontages; (d) minimise potential entrapment areas and maximise continuous sight lines.	**P4.**	(1) No probable solution identified.
S5.1	Pedestrian Access and Connectivity - (1) Pedestrian footpaths and pathways - (a) are continuous and compatible with existing pedestrian pathways; (b) protect pedestrians from rain and sun; (c) allow for street trees and other landscaping; (d) are adequately lit to ensure pedestrian safety and amenity while not causing nuisance to surrounding residents. (2) Awnings for pedestrian shelter are consistent with the character setting of the centre and - (a) are provided and maintained by the building owner on their premises; (b) extend and cover the adjoining footpath (c) include lighting under the awning; (d) maintain the normal flow of pedestrians;	**P5.1**	(1) No probable solution identified; (2) No probable solution identified; (3) No probable solution identified.

Assessable Development			
Specific Outcomes		**Probable Solutions**	
	(e) are continuous across the frontage/s of a site; (f) align to provide continuity with existing or future shelter structures on adjoining sites; (g) are a minimum 3.2 metres in width and generally not more than 4.2 metres above pavement height; (h) extend from the face of the building or the property line; (i) do not extend past a vertical plane - (i) 1.5 metres inside the kerbline to enable street trees to be planted and grow; or (ii) 0.6 metres inside the kerbline where trees are established; (j) have a 0.5 metre clearance to any tree trunk and main branches; (k) align with existing awnings where the footpath has been widened; (l) are cantilevered from the main building with any posts within the footpath being non-load-bearing; (3) Pedestrian shelter provided as a free standing structure, for example an umbrella, is consistent with the character of the centre, and - (a) is sited within a footpath; (b) provided and maintained by the building owner on their premises; (c) maintains the normal flow of pedestrians; (d) is a minimum 2.5 metres above pavement height; (e) does not extend past a vertical plane 0.6 metres inside the kerb line; (f) ensures any load bearing posts are setback a minimum of 1 metre from the kerbline and do not disrupt pedestrian movements.		
S5.2	(1) Buildings provide facilities for convenient, safe and comfortable movement of pedestrians within and connecting to the centre. The finished levels allow easy pedestrian, bicycle, vehicular and carparking interconnection between properties and buildings	**P5.2**	(1) No probable solutions identified; (2) No probable solutions identified.

Assessable Development			
Specific Outcomes		**Probable Solutions**	
	within the centre; (2) In major and district centres, arcades are provided in areas of high pedestrian and retail activity and - (a) integrate adjoining buildings; (b) link established pedestrian networks, parking and public transport facilities; (c) provide for formal and informal activities such as outdoor dining; (d) provide for 24 hour pedestrian access; (e) take advantage of natural light and ventilation.		
S5.3	(1) The design of buildings and spaces promotes legibility to help users find their way. This may be achieved by ensuring - (a) street numbers and building names are prominently displayed; (b) public signage is provided at - (i) public transport stations; (ii) interchanges; (iii) major stops; (iv) entries to the centre; (c) signage details the services available within the centre and where they are located.	**P5.3**	(1) No probable solution identified.
S5.4	(1) Development maintains or establishes continuous, accessible, attractive, direct, convenient and effectively signed routes through sites for pedestrians and cyclists, providing for - (a) access to public transport facilities; (b) links to carparking areas; (c) improved accessibility to and from facilities and services within the centre; (2) Pedestrian connections are - (a) designed to ensure open parking areas have clearly delineated, convenient walkways through them, suitable for use by wheelchairs, trolleys and pushers; (b) properly illuminated at all times; (c) paved and finished with materials in accordance with the desired character of the centre;	**P5.4**	(1) No probable solution identified; (2) No probable solution identified.

Assessable Development			
Specific Outcomes		**Probable Solutions**	
	(d) a minimum 3 metres wide.		
S6.	Design for Safety - Design and building of spaces must safeguard and promote personal and property security for all users of the centre. In particular, casual surveillance of public and communal areas, including public transport facilities, is optimised through minimising concealed areas and maximising continuous sight lines.	**P6.**	No probable solution identified. **Note -** To assist in achieving S6. refer to Planning Scheme Policy 16 – Safer By Design.
S7.	Non-Discriminatory Access - Buildings and facilities within centres are accessible to people with special needs.	**P7.**	Non-discriminatory access complies with *Australian Standard 1428: 2003 - Design for Access and Mobility.*

Table 1 - Maximum Height to the Top of the Floor Level of Highest Habitable Room/Commercial Storey

Location	Maximum Overall Building Height	Maximum Height to the Top of the Floor Level of Highest Habitable Room/Commercial Storey
Major Centre Zone		
Capalaba		
Sub-area MC1	Refer to Part 4 - Division 12 - Major Centre Zone - Map 1 - Capalaba Height Limits	23 metres (8 storey)/ 14 metres (5 storey)/ 8 metres (3 storey) (depending on location within the sub-area)
Sub-area MC2	14 metres	8 metres (3 storey)
Cleveland		
Sub Area MC3	20 metres	14 metres (5 storey)
Sub-area MC4	14 metres	8 metres (3 storey)
Sub-area MC5	26 metres	20 metres (7 storey)
Sub-area MC6	20 metres	14 metres (5 storey)
Sub-area MC7	14 metres	8 metres (3 storey)
Sub-area MC8	20 metres	14 metres (5 storey)
Victoria Point		
Sub-area MC9	14 metres	8 metre (3 storey)
Sub-area MC10	14 metres	8 metre (3 storey)
Sub-area MC11	14 metres	8 metre (3 storey)
Sub-area MC12	14 metres	8 metre (3 storey)
District Centre Zone	**14 metres**	**8 metres (3 storey)**
Neighbourhood Centre Zone	**10.5 metres**	**4.5 metres (2 storey)**
Sub-area NC1	10.5 metres	4.5 metres (2 storey)
Sub-area NC2	14 metres	8 metres (3 storey)
Sub-area NC3	10.5 metres	4.5 metres (2 storey)
Local Centre Zone	**10.5 metres**	**4.5 metres (2 storey)**

Division 4 - Commercial Industry Activity

8.4.1 Introduction

(1) This division contains the provisions for the Commercial Industry Activity Code, that incorporates -

(a) Compliance with the Commercial Industry Activity Code (section 8.4.2);

(b) Overall Outcomes of the Commercial Industry Activity Code (section 8.4.3);

(c) Acceptable Solutions applicable to Self-Assessable Development (section 8.4.4).

8.4.2 Compliance with the Commercial Industry Activity Code

(1) Self-assessable development that is consistent with the acceptable solutions in section 8.4.4 complies with the Commercial Industry Activity Code.

8.4.3 Overall Outcomes of the Commercial Industry Activity Code

(1) The overall outcomes are the purpose of the Commercial Industry Activity Code.

(2) The overall outcome sought for the Commercial Industry Activity Code is the following -

(a) to ensure the commercial industry activity -

(i) facilitates the timely establishment of specified uses that require only minor building work to existing premises;

(ii) has a scale, intensity and operation of the use of premises that is consistent with existing building floor space and infrastructure.

8.4.4 Acceptable Solutions applicable to Self-Assessable Development

Self-Assessable Development	
Acceptable Solutions	
A1.	(1) The commercial industry activity is located in either the - (a) Commercial Industry Zone; or (b) Island Industry Zone; or (2) Is for a tenancy change only; (3) Involves only minor building work to an existing building; (4) Complies with Part 9 - Schedule 1 - Access and Parking - Table 1 - Minimum On-Site Vehicle Parking Requirements specified for the proposed use in terms of - (a) minimum number of parking spaces; (b) minimum design vehicle. **Note -** ■ If not self-assessable the use is to achieve the assessment criteria stated for that use in column 3 of the table of assessment for material change of use of premises for the relevant zone. ■ Credit is given for parking spaces already provided for the existing use provided that this use was lawfully established. Refer to explanatory note to Table 1 in Part 9 - Schedule 1 - Access and Parking. ■ If for an Environmentally Relevant Activity, a development approval for the use is obtained under the *Environmental Protection Act 1994*.

Division 5 - Development Near Underground Infrastructure

8.5.1 Introduction

(1) This division contains the provisions for the Development Near Underground Infrastructure Code, that incorporates -

(a) Compliance with the Development Near Underground Infrastructure Code (section 8.5.2);

(b) Overall Outcomes of the Development Near Underground Infrastructure Code (section 8.5.3);

(c) Acceptable Solutions applicable to Self-Assessable Development (section 8.5.4);

(d) Specific Outcomes and Probable Solutions applicable to Assessable Development (section 8.5.5).

8.5.2 Compliance with the Development Near Underground Infrastructure Code

(1) Development that is consistent with the following complies with the Development Near Underground Infrastructure Code -

(a) acceptable solutions in section 8.5.4 where self-assessable development; or

(b) specific outcomes in section 8.5.5 where assessable development.

Note -

Planning Scheme Policy 9 - Infrastructure Works will assist in achieving specific outcomes within the Development Near Underground Infrastructure Code.

8.5.3 Overall Outcomes of the Development Near Underground Infrastructure Code

(1) The overall outcomes are the purpose of the Development Near Underground Infrastructure Code.

(2) The overall outcome sought for the Development Near Underground Infrastructure Code is the following -

(a) to ensure existing underground utility infrastructure is protected from damage resulting from development in proximity to that infrastructure.

(b) To ensure continued serviceability of the infrastructure;

(c) To ensure adequate access is available for inspecting and maintaining the infrastructure.

8.5.4 Acceptable Solutions applicable to Self-Assessable Development

Self-Assessable Development	
Acceptable Solutions	
A1.	(1) Development is – (a) not within 2 metres horizontal distance of underground utility infrastructure that is greater than 300mm in diameter; or (b) not within 1.5 metres horizontal distance of underground utility infrastructure that is less than 300mm in diameter, including connection points; (c) clear of any maintenance holes, pits or connection point by - (i) a minimum distance of 2.4 metres vertically; (ii) a minimum horizontal distance of 1 metre from the outer edge of any maintenance holes or pits; (iii) maintaining a 2 metre x 2 metre clear area. (d) not within a dedicated underground utility infrastructure easement; or **Note -** For the purpose of this code 'underground utility infrastructure' is limited to water reticulation; sewerage reticulation and stormwater drainage operated by the local government or under the responsibility of the local government. Uses and other development are compliant with Australia *Standard 3500.2:2003 National Plumbing and Drainage – Sanitary Plumbing and Drainage,* when in proximity to existing or proposed underground utility infrastructure. (2) Where development is less that 1.5 metres, but is not located over a sewer main less that 300mm in diameter - (a) footings extend to at least 300mm below the zone of influence and the piers or continuous footings are located a minimum horizontal distance of 1 metre from the underground utility; (b) walls and floors achieve a minimum of 1 metre horizontal distance from the underground utility; or **Note -** Refer to Diagram 1 – Zone of Influence. (3) Where development is domestic outbuilding and located over a gravity sewer main less that 300mm in diameter, the domestic outbuilding - (a) has a minimum clearance of 600mm vertically from the underground utility; (b) is not within 1.5 metres horizontal distance from a connection point; (c) has a maximum length and/or width of 6 metres; (d) has a fabric-reinforced flat slab foundation not exceeding 175mm thick; (e) has no footings or piers in the foundation; or **Note -** The flat-slab is designed by the manufacturer or by an RPEQ (Civil) experienced in design of foundations, and is constructed on well compacted ground. (4) Where development is retaining wall located near or over a gravity sewer, the retaining wall – (a) is no more than 1 metre in height; (b) has a minimum clearance of 600mm vertically from the underground utility; (c) has a base width not exceeding 300mm; (d) crosses the utility at an angle not less than 60 degrees; (e) has a minimum clearance of 600mm horizontally; (f) does not align vertically above the utility.

	Note – If the underground infrastructure is under a flat slab, the clearance is between the underside of the slab and the top of the utility infrastructure. For the purpose of this code, maintenance holes and pits means manholes, sewer inspection openings, valve pits and similar associated structures.

8.5.5 Specific Outcomes and Probable Solutions applicable to Assessable Development

Assessable Development			
Specific Outcomes		**Probable Solutions**	
	General -		
S1.	(1) Uses and other development are located and designed to not interfere with or adversely affect the function of existing or proposed underground utility infrastructure.	**P1.**	(1) Uses and other development - (a) are not permitted within a dedicated underground utility infrastructure easement; (b) are compliant with *Australian Standard 3500.2:2003 National Plumbing and Drainage - Sanitary Plumbing and Drainage,* when in proximity to existing or proposed underground utility infrastructure; (c) are not carried out above or below ground within 2 metres horizontal distance of underground utility infrastructure pipes that are 300mm or greater in diameter; or (d) where underground utility infrastructure pipes are less than 300mm in diameter - (i) for works below ground, achieve a minimum horizontal distance of 1.5 metres between the underground infrastructure and footings by - a. locating the footings at the required distance; or b. relocating the underground utility infrastructure to achieve the required distance; or c. redesigning existing footings to achieve the required distance; or (ii) for works above ground, such as walls and floors achieve a minimum 1 metre horizontal distance between the walls of the building and underground utility infrastructure.

Assessable Development			
Specific Outcomes		Probable Solutions	
			Note - Where utility infrastructure is required to be relocated, modified, altered or replaced it is done so at the full cost and expense of the development proponent. All such works are to be designed by an appropriately experienced RPEQ (Civil) and constructed to Council's satisfaction. Connection to live sewers will be completed by Council at the expense of the developer. (iii) where solution P1(1)(d)(i) is not achievable footings are extended to at least 300 mm below the zone of influence by either – a. piers or continuous footing with a minimum of 1 metre horizontal distance to the underground utility infrastructure; or b. where footing will be within 1 metre, but not closer than 600mm to underground infrastructure, the pipe is replaced with a pipe that achieves a minimum structural strength, and serviceability, such as K12 ductile iron internal lined with polyurethane and externally treated with a layer of zinc and coated with bitumen, that has a future life in excess of 50 years; c. no footings or piers are permitted to cross, be placed vertically above, or closer than 600mm horizontally to a sewer; **Note -** Refer to Diagram 1 – Zone of Influence.

Assessable Development			
Specific Outcomes		**Probable Solutions**	
S2.	Access to Infrastructure - (1) For maintenance purposes, development retains access to underground infrastructure by way of vehicle, plant or equipment - (a) from the surface; (b) to any access cover or connection point.	**P2.**	(1) Areas surrounding any maintenance holes, pits or connection points are clear of fill or other obstructions, by - (a) a minimum distance of 2.4 metres vertically; (b) a minimum distance of 1 metre horizontally from the outer edge of the access way; (c) maintaining a 2 metre x 2 metre clear area.

Diagram 1 - Zone of Influence

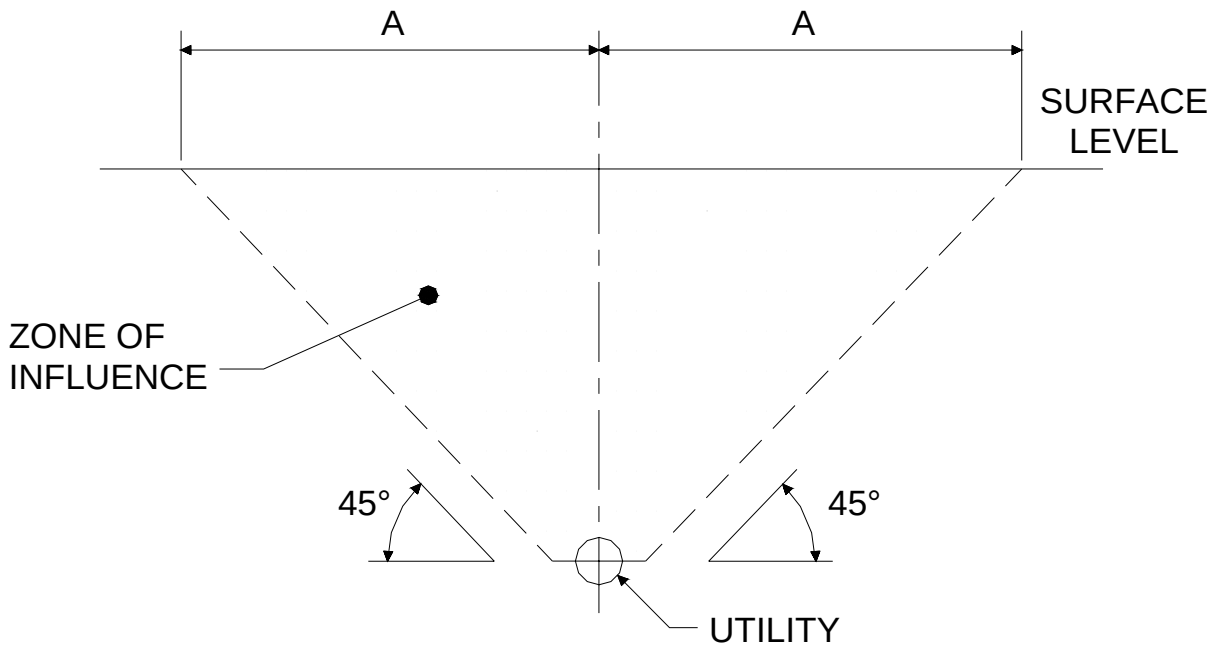

Note -

- The zone of influence means the area under the ground that is deemed to be loaded by the footings;
- Special consideration may apply where structures or slabs are located within Dimension A.

this page purposely
left blank

Division 6 - Erosion Prevention and Sediment Control

8.6.1 Introduction

(1) This division contains the provisions for the Erosion Prevention and Sediment Control Code, that incorporates -

(a) Compliance with the Erosion Prevention and Sediment Control Code (section 8.6.2);

(b) Overall Outcomes of the Erosion Prevention and Sediment Control Code (section 8.6.3);

(c) Acceptable Solutions applicable to Self-Assessable Development (section 8.6.4);

(d) Specific Outcomes and Probable Solutions applicable to Assessable Development (section 8.6.5).

8.6.2 Compliance with the Erosion Prevention and Sediment Control Code

(1) Development that is consistent with the following complies with the Erosion Prevention and Sediment Control Code -

(a) acceptable solutions in section 8.6.4 where self-assessable development; or

(b) specific outcomes in section 8.6.5 where assessable development.

8.6.3 Overall Outcomes of the Erosion Prevention and Sediment Control Code

(1) The overall outcomes are the purpose of the Erosion Prevention and Sediment Control Code.

(2) The overall outcome sought for the Erosion Prevention and Sediment Control Code is the following -

(a) to ensure -

(i) prevention of erosion and land degradation associated with land development processes;

(ii) the quantity of sediments flowing from development sites into waterways and the stormwater drainage system is actively mitigated.

8.6.4 Acceptable Solutions applicable to Self-Assessable Development

Self-Assessable Development	
Acceptable Solutions	
A1.	(1) The area of disturbance is less than 600m^2; (2) Disturbance does not involve the removal of any native plants that have a height greater than 2 metres, other than plants within the area approved for building or operational works associated with the development; (3) Erosion and run-off of sediment from the site is controlled through - (a) the use of - (i) sediment fences or similar trapping measures at stormwater discharge points; (ii) silt sausages or silt bags across open drains; (iii) mesh fabric on steep slopes; (iv) turf filter strips on down slopes to act as a final filter; (v) sediment traps and detention ponds that are designed to hold water and allow sediment to settle; (b) providing all weather vehicle access to the lot or premises before disturbance of the site occurs; (c) stockpiling of erodable materials that are - (i) contained within the lot or premises; (ii) protected from erosion by sediment fences; (iii) covered where prone to wind erosion; (d) controlling and diverting run-off around disturbed areas by using diversion drains and earth banks; (e) discharging down pipes away from the building site and onto a stabilised area within the lot or premises, until roof run-off pipes are provided.

8.6.5 Specific Outcomes and Probable Solutions applicable to Assessable Development

Assessable Development			
Specific Outcomes		**Probable Solutions**	
S1.	(1) The design, construction and operation of uses and other development limits the exposure of the soil surface to stormwater or wind; (2) The discharge of sediment laden stormwater from the lot or premises is controlled through the implementation of erosion and sedimentation control measures.	**P1.**	(1) Uses and other development are designed in a manner that minimises impacts of erosion by - (a) minimising the area and duration of disturbance and exposure; (b) retaining vegetation; (c) reducing the need for excavation or fill; (2) No probable solution identified. **Note -** Refer to Planning Scheme Policy 9 - Infrastructure Works for information regarding the design and implementation of sediment capturing measures.

Diagram 1 - Example of Erosion Prevention and Sediment Control Mechanisms

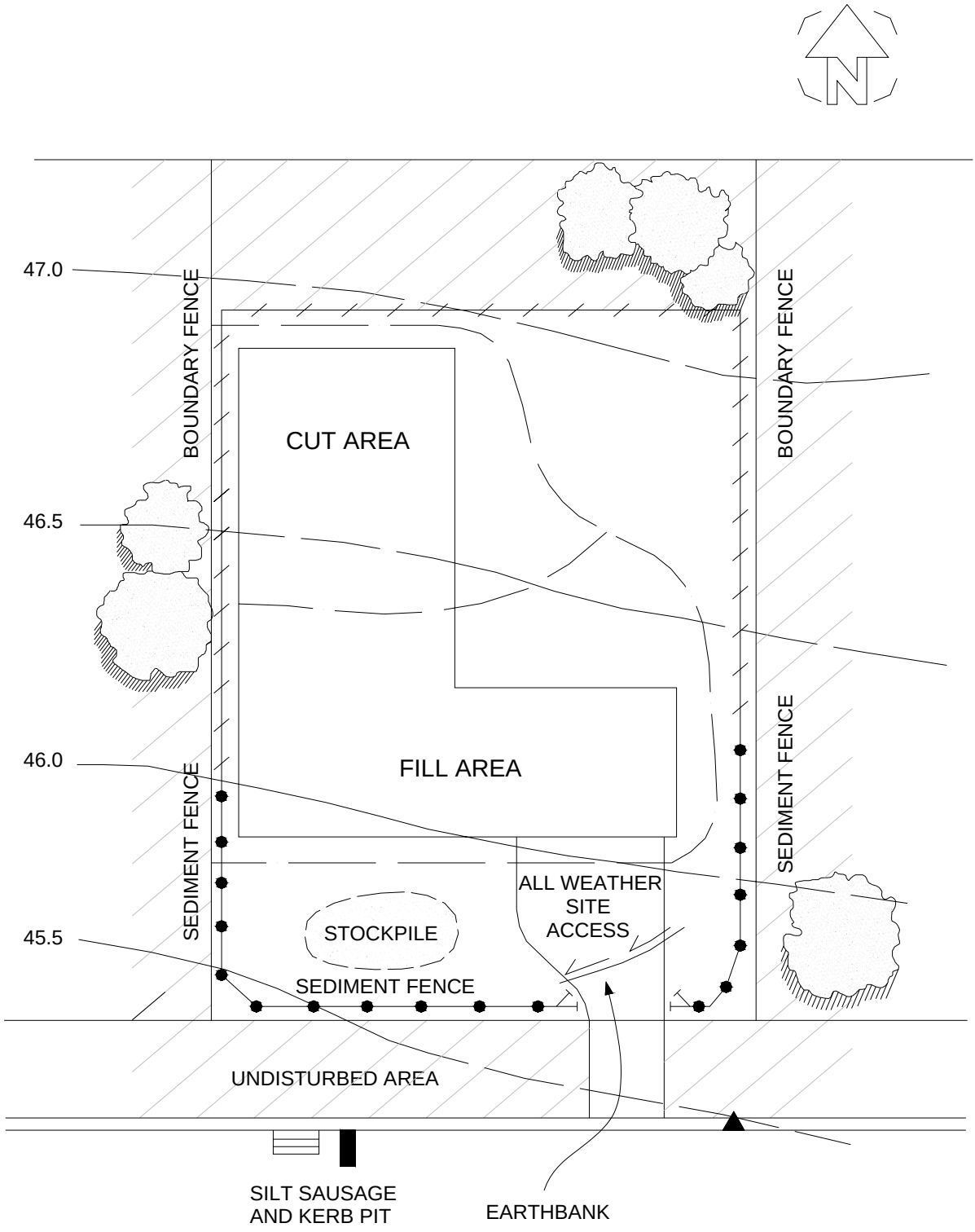

Erosion Prevention and Sediment Control

this page purposely
left blank

Division 7 - Infrastructure Works

8.7.1 Introduction

(1) This division contains the provisions for the Infrastructure Works Code, that incorporates -

(a) Compliance with the Infrastructure Works Code (section 8.7.2);

(b) Overall Outcomes of the Infrastructure Works Code (section 8.7.3);

(c) Specific Outcomes and Probable Solutions applicable to Assessable Development (section 8.7.4).

8.7.2 Compliance with the Infrastructure Works Code

(1) Development that is consistent with the specific outcomes in section 8.7.4 complies with the Infrastructure Works Code.

Note -

The following planning scheme policies will assist in achieving specific outcomes within the Infrastructure Works Code -

- Planning Scheme Policy 3 - Contributions and Security Bonding;
- Planning Scheme Policy 9 - Infrastructure Works.

8.7.3 Overall Outcomes of the Infrastructure Works Code

(1) The overall outcomes are the purpose of the Infrastructure Works Code.

(2) The overall outcome sought for the Infrastructure Works Code is the following -

(a) to ensure utility, road, pedestrian and cycle infrastructure -

(i) is provided in a cost-effective, efficient and coordinated manner;

(ii) is integrated with existing systems and facilitates provision of future systems;

(iii) meets the local government's standards;

(iv) is designed to minimise whole-of-life costs;

(v) does not result in adverse impacts on environmental values;

(vi) maintains the safety of people and property.

8.7.4 Specific Outcomes and Probable Solutions applicable to Assessable Development

Assessable Development			
Specific Outcomes		**Probable Solutions**	
S1.	Utility Infrastructure - (1) Utility Infrastructure is designed, constructed and located in accordance with the local government's standards.	**P1.**	(1) Utility infrastructure is - (a) designed and constructed in accordance with the local government's standards; (b) located, co-located and aligned within the road reserve in accordance with Standard Drawings - (i) R-RSC-9 Public Utilities in Road Reserves - Typical Service Corridors and Alignments; (ii) R-RSC-10 Public Utilities in Road Reserves - Typical Service Conduit Sections; (iii) R-RSC-13 Water Service Conduits. **Note -** Refer to Planning Scheme Policy 9 - Infrastructure Works for the local government standards and Standard Drawings.
S2.	Electrical Infrastructure - (1) Electrical infrastructure - (a) is consistent with the expected capacity of the use or other development; (b) upgrades existing networks where current capacity is insufficient for the needs of the use or other development; (c) enhances opportunities for extension of below ground networks.	**P2.**	(1) Underground electrical reticulation infrastructure is provided - (a) along all internal public roads and any existing external public roads for the extent of the development, for reconfiguration that creates lots in the following zones - (i) Urban Residential Zone - excluding sub-area UR3; (ii) Medium Density Residential Zone; (iii) Low Density Residential Zone; (iv) Park Residential Zone; (v) Point Lookout Residential Zone; or (b) in centre zones, except SMBI Centre Zone and Local Centre Zone - sub-area LC1; or (c) in dedicated underground areas; or (d) where the use has a street frontage of greater than 50 metres and will result in 10 or more dwelling units; or (e) for uses of a commercial,

Assessable Development			
Specific Outcomes		**Probable Solutions**	
			industrial, or community nature; or (f) where not providing underground infrastructure and the use or other development requires works within the verge, conduits are installed to allow for future expansion of underground utility infrastructure. **Note -** Refer to Planning Scheme Policy 9 - Infrastructure Works, Maps 1 - 8 for Dedicated Underground Areas.
S3.	Water Supply - (1) Water supply infrastructure - (a) is consistent with the expected capacity of the use or other development; (b) upgrades existing networks where current capacity is insufficient for the needs of the use or other development.	**P3.**	(1) Uses and other development are - (a) connected to a reticulated water supply; or (b) where a reticulated system is not available rainwater harvesting supplements or provides the potable water supply; (c) provided with water meters, for billing purposes that are a type approved by Redland Water and Waste and installed in accordance with *Australian Standard 3500:1.2: 1998 - Section 12 - Installation of Water Meters*; (2) provided with fire hydrants in accordance with *Australian Standard 2419.1: 1996 - Fire Hydrant Installations*.
S4.	Sewerage Management - (1) Sewerage infrastructure - (a) is consistent with the expected capacity of the use or other development; (b) upgrades existing networks where current capacity is insufficient for the needs of the use or other development.	**P4.**	(1) Uses and other development are - (a) connected to a reticulated sewage system; or (b) in unsewered areas, wastewater is treated and disposed of on-site subject to the location, design and performance of treatment systems.
S5.	Communications - (1) Communications infrastructure - (a) is consistent with the expected capacity of the use or other development; (b) upgrades existing networks where current capacity is	**P5.**	(1) Uses and reconfiguration that creates lots - (a) optimise opportunities for electronic communication by providing cabling suitable for a range of applications;

Assessable Development			
Specific Outcomes		**Probable Solutions**	
	insufficient for the needs of the use or other development.		(b) are supplied with underground telecommunication services.
S6.	Street and Path Lighting - (1) Lighting infrastructure - (a) is consistent with the expected capacity of the use or other development; (b) upgrades existing networks where current capacity is insufficient for the needs of the use or other development.	**P6.**	(1) Uses or reconfiguration that create new public or private roads, pedestrian and cycle paths, or public open space provide street and path lighting in accordance with *Australian Standard 1158 - Road Lighting.* **Note -** Various versions of *Australian Standard 1158 - Road Lighting* may apply depending on the use and other development proposed.
S7.	Road Provision and Design - (1) Uses or reconfiguration that create new public roads or require the upgrading of a public road reserve - (a) maintain or improve the safe and efficient operation of roads having regard to - (i) the functional classification of the road from which it gains access; (ii) the location and design of access points; (iii) facilitating links between the use or other development and other high activity nodes such as educational facilities, communal facilities, centres and open space; (iv) the potential for conflict between vehicles, pedestrians and cyclists; (v) the location, construction and maintenance of utility infrastructure; (vi) the location of activities within the site and their relationship with adjacent public roads; (vii) the nature and intensity of traffic generated by the use or other development; (viii) the number of vehicles likely to be attracted to the site at any one time, whether due to the use or other uses;	**P7.**	(1) Roads are upgraded or created in accordance with Part 9 - Schedule 6 - Movement Network and Road Design - (a) Table 1 - Functional Characteristics of Road Types and Map 1 - Movement Network; and for - (i) the mainland and NSI - Table 2 - Road Design; or (ii) for SMBI - Table 3 - SMBI Road Design; or (iii) for industrial development - Table 4 - Industrial Road Design Characteristics; (iv) for residential uses and residential reconfiguration, traffic volumes on individual roads are determined by assuming - a. ten vehicle movements per dwelling unit per day in all zones, except centre zones. b. six vehicle movements per dwelling unit per day in centre zones; (v) for trunk collector and higher order roads, the road width is sufficient to provide for indented bus bays, to allow for the movement of buses unimpeded by parked vehicles and on-road cycle lanes; (vi) where possible, the geometric design of the

Assessable Development			
Specific Outcomes		**Probable Solutions**	
	(ix) the location, capacity and configuration of any existing or proposed car parking areas associated with the use; (x) if located in a centre zone, the predominantly pedestrian orientated nature of public spaces in that zone; (b) are provided with a road reserve and verge width sufficient to accommodate the - (i) safe and efficient movement of all users, including pedestrians and cyclists; (ii) on-street parking; (iii) street tree planting; (iv) utility infrastructure, including stormwater management and run-off from road surfaces; (c) facilitate safety by providing - (i) safe sight distances based on - a. road classification; b. target speed; c. expected access points; (ii) pedestrian and cyclist crossings at intersections or where required to access - a. high activity nodes; b. public transport; c. centres; (iii) an alignment that does not result in excessive speeds; (iv) a combination of speed reduction techniques to achieve desired speeds including - a. speed platforms; b. t-junction with splitter islands; c. modified intersections; d. roundabouts; or e. other speed control devices.		road facilitates stormwater management and run-off from road surfaces using water sensitive urban design (WSUD) principles, specifically those relating to low-impact street design and layout; (b) road design and sight distance requirements achieve the following - (i) target speeds detailed in Part 9 - Schedule 6 - Movement Networks and Road Design - Table 2 - Road Design; (ii) sight distances for intersections comply with *AUSTROADS Chapter 5 - Geometric Road Design, S5.2.2*; (iii) sight distances for driveway access location comply with Part 9 - Schedule 1 - Access and Parking - Table 2 - Driveway Access Location; **Note -** Refer to - ■ Part 8 - Division 1 - Access and Parking Code; ■ Planning Scheme Policy 9 - Infrastructure Works.	
S8.	Pedestrian and Cycle Path Provision - (1) Pedestrian and cycle path infrastructure is provided - (a) to form an integrated component of the movement	**P8.**	(1) No probable solution identified.

Assessable Development			
Specific Outcomes		**Probable Solutions**	
	network and the open space system; (b) to encourage walking and cycling; (c) to add variety and visual interest; (d) to conserve street trees, vegetation and other significant features; (e) to allow equitable access to public areas and community facilities; (f) with adequate lighting where subject to high night time usage; (g) in locations where there is casual surveillance; (h) or widened at potential conflict points; (i) to incorporate - (i) street tree planting to enhance the streetscape; (ii) directional signage that is visible under all conditions.		
S9.	Pedestrian and Cycle Path Design and Construction - (1) Pedestrian and cycle path infrastructure is designed and constructed to - (a) provide a stable, smooth surface, including across driveways, sections and joins; (b) be easily maintained; (c) a width and longitudinal gradient to cater for projected usage, including nearby - (i) high activity nodes; (ii) public transport; (iii) centres; (d) provide clear sight-lines for safe use; (e) be free of any obstructions such as fences, signage and bollards.	**P9.**	(1) Pedestrian and cycle path infrastructure is designed and constructed - (a) in accordance with in Part 9 - Schedule 6 - Movement Network and Road Design - Table 2 - Road Design; (b) to have sign posting, particularly where commuter and recreational paths, and incorporate pavement markings and line work in accordance with *AUSTROADS Part 14 - Bicycles, Section 9*; (c) to have navigational signs in accordance with the - *(i) Manual of Uniform Traffic Control Devices (MUTCD) Bicycle Directional Signage Guidelines;* *(ii) Australian Standard 1742.9: 2000 - Manual of Uniform Traffic Control Devices - Bicycle Facilities;* (d) to be clearly delineated by pavement markings and warning signs when an on-road bicycle lane; (e) to incorporate - (i) kerb ramps at all intersections and

Assessable Development			
Specific Outcomes		**Probable Solutions**	
			designated crossings; (ii) refuge islands on all roads with median strips; (iii) holding rails for cyclists at the intersection of trunk collector, sub-arterial and arterial roads that are positioned in accordance with - a. *Australian Standard 1742.9: 2000 - Manual of Uniform Traffic Control Devices - Bicycle Facilities*; b. *AUSTROADS Part 14 - Bicycles - Section 9*; (iv) marked bicycle lanes or storage boxes. **Note -** ■ Refer to Planning Scheme Policy 9 - Infrastructure Works for assistance in achieving specific outcomes; ■ Cyclists can legally use footpaths, to be treated as a shared path, unless prohibited.
	Streetscape Works -		
S10.	(1) For all uses and other development, redundant crossovers are removed and kerb, channel and footpaths are reinstated.	**S10.**	(1) Footpaths and kerb and channel are reinstated in accordance with Part 9 - Schedule 6 - Movement Network and Road Design - (a) Table 2 - Road Design; or (b) Table 3 - SMBI Road Design Characteristics; or (c) Table 4 - Industrial Road Design Characteristics.
S11.	(1) Uses and reconfiguration that create lots - (a) contribute to the amenity of the locality; (b) provide shade for pedestrians; (c) reinforce pedestrian and cycle paths by - (i) street tree planting; (ii) street furniture; (iii) pavement treatments.	**P11.**	(1) No probable solution identified. **Note -** Refer to Part 8 - Division 8 - Landscape Code for further information regarding street trees.
	Timing of Utility Infrastructure-		
S12.	(1) Uses and reconfiguration are staged to ensure that utility infrastructure is fully operational before a new area is released or prior to the use commencing.	**P12.**	(1) All infrastructure is in place and operational - (a) as required by a condition of a development approval; or (b) prior to the local government

Assessable Development			
Specific Outcomes		Probable Solutions	
	Note - Refer to Planning Scheme Policy 3 - Contributions and Security Bonding for further information regarding security bonds.		sealing the plan of survey; or (c) having in place adequate security bonds to guarantee the completion of works and a period of on-maintenance.

Division 8 - Landscape

8.8.1 Introduction

(1) This division contains the provisions for the Landscape Code, that incorporates -

(a) Compliance with the Landscape Code (section 8.8.2);

(b) Overall Outcomes for the Landscape Code (section 8.8.3);

(c) Specific Outcomes and Probable Solutions applicable to Assessable Development (section 8.8.4).

8.8.2 Compliance with the Landscape Code

(1) Development that is consistent with the specific outcomes in Section 8.8.4 complies with the Landscape Code.

Note -

Planning Scheme Policy 9 - Infrastructure Works will assist in achieving specific outcomes within the Landscape Code.

8.8.3 Overall Outcomes of the Landscape Code

(1) The overall outcomes are the purpose of the Landscape Code.

(2) The overall outcome sought for the Landscape Code is the following -

(a) to ensure -

(i) landscaping is sensitive to site attributes such as the streetscape character, natural landforms and landscape settings, existing vegetation, views, land capability, and the availability of water and drainage;

(ii) landscaping complements the nature and scale of the use or other development;

(iii) landscaping maintains the local identity of different parts of the planning scheme area;

(iv) significant on-site native plants are retained, protected and integrated into landscape design.

8.8.4 Specific Outcomes and Probable Solutions applicable to Assessable Development

Assessable Development			
Specific Outcomes		**Probable Solutions**	
S1.	(1) Landscaping - (a) provides for sensory interest through form, texture, fragrance and variations in seasonal colour; (b) creates a sense of place and character; (c) provides long term visual amenity; (d) does not impact on the structural integrity of proposed buildings; (e) assists in blending the use or other development with the streetscape and landscape setting; (f) assists in defining pedestrian and cycle paths; (g) assists in the provision of privacy; (h) contributes to pleasant climatic conditions by - (i) providing summer shade, especially to west-facing windows and open car parking areas; (ii) allowing winter sun to outdoor and indoor living areas; (iii) allowing summer breezes; (iv) screening cold winter winds; (2) Landscape design - (a) reduces the potential for crime and vandalism by maintaining causal surveillance of public and semi-public spaces, and along the entire length of pedestrian and cycle paths; (b) incorporates adequate lighting; (c) maintains sight lines for vehicles and pedestrians, especially near street corners and intersections in accordance with the *Australian Standard 2890.1: 1993 - Off-Street Parking;*	**P1.**	(1) Landscaping - (a) reflects the specific character of the locality by using planting on-site similar to that existing, except where existing plant species are identified in Part 9 - Schedule 12 - Weed Species; (b) comprises of native species as specified in Part 9 - Schedule 10 - Vegetation Species List; (c) incorporates tree species in private or communal open space areas that by eight (8) years will achieve - (i) 50 percent shading in private open space; (ii) 30 percent shading in communal open space; (d) incorporates shade trees in turfed areas greater than $20m^2$; (e) incorporates planted landscaping over a minimum of half the landscape area; (2) Landscaping maximises safety by - (a) ensuring surfaces are stable, non-slip and useable in all weather conditions; (b) incorporating security and foot lighting - (i) at site and building entries; (ii) in driveways; (iii) in car parking areas; (iv) along pedestrian and cycle paths; (c) maintaining long-distance sight lines and avoiding 'blind' corners so that persons can be identified from a minimum distance of 15 metres; (d) locating trees with a minimum 1.8 metres of clear trunk near entries, car parking areas, street corners and driveways; (e) planting along pedestrian paths being - (i) restricted within 2 metres on either side of the path; (ii) limited to 600mm in height

Assessable Development			
Specific Outcomes		**Probable Solutions**	
			or to trees with a clear trunk of 1.2 metres within 10 metres of either side of the path;
	(3) Landscape design ensures the long term survival of planting by selecting species suited to the proposed location in relation to - (a) access to sunlight; (b) constraints of built form; (c) expected activities associated with the use and other development;		(3) No probable solution identified;
	(4) The location of new buildings, car parks and driveways enables the retention and long term performance of planting;		(4) Landscaping protects retained planting by - (a) constructing a durable temporary fence around the perimeter of the canopy drip line of trees retained during construction and works phases of development; (b) restricting materials and equipment storage within the canopy drip line of retained trees; **Note -** Where any development activity, such as building, excavation, fill or storage, is required within the drip line of significant planting that is to be retained, construction details are to be specified by a qualified arborist.
	(5) Landscaping and planting is located and designed so that it does not interfere with or adversely affect the function of existing or proposed underground utility infrastructure;		(5) No probable solution identified; **Note -** Refer to Part 8 - Division 5 - Development Near Underground Infrastructure Code to assist in achieving S1(5).
	(6) Landscaping is designed - (a) for efficient and effective maintenance; (b) to minimise water usage; (c) maximise stormwater infiltration.		(6) Landscaping - (a) that incorporates paved areas, turf and mulched garden beds is adequately drained through the provision and treatment of swales, spoon drains, field gullies, sub-surface drainage and stormwater connections; (b) does not restrict overland flow paths; (c) maximises water infiltration on site through - (i) draining hard surfaced areas towards permeable surfaces; (ii) incorporating turf and

Assessable Development			
Specific Outcomes		**Probable Solutions**	
			garden beds; (iii) maximising the extent of permeable surfaces; (d) gradients for all turfed areas are no greater than 1 in 4; (e) of turfed areas is accessible by standard lawn maintenance equipment; (f) is provided with a reticulated irrigation and drainage system to all podium planting, common landscaped and open space areas; (g) where incorporating podium and container planting, connection is made to stormwater outlets that allows for flush out and clearance of blockages; (h) is provided with one hose connection within private and communal open space areas; (i) incorporates hardy plant species with long life expectancy and minimal litter drop, pruning, watering and fertilising requirements, where the site is not readily accessible or on-site maintenance is limited.
S2.	Boundary Planting - (1) Planting along boundaries - (a) is located within the site; (b) maintains privacy between adjoining buildings; (c) enhances the visual appearance of the built form; (d) screens service and utility areas; (e) provides surveillance opportunities to public areas; (f) enhances opportunity for contributing to pleasant climatic conditions; (g) assists in reducing noise impacts between noise sources and sensitive receiving environments.	**P2.**	(1) No probable solution identified. **Note -** Refer to the relevant use code and zone code for specific assessment criteria.
S3.	Street Trees and Furniture - (1) Street trees are provided in the road reserve to - (a) contribute to the image of the planning scheme area; (b) reinforce the character and identity of a locality; (c) provides shade for	**P3.**	(1) Street trees - (a) are provided at a rate of - (i) 1 tree per 10 lineal metres of road frontage; or (ii) a minimum of 1 tree per 400m^2 of site area, whichever is greater of (i)

Assessable Development			
Specific Outcomes		**Probable Solutions**	
	pedestrians; (d) reinforce movement paths; (e) soften the appearance of hard stand areas and the built form; (2) Street furniture in the form of seating, lighting, rubbish bins, or the like are provided to (a) enhance the streetscape; (b) facilitate social interaction; (c) maintain clean streetscapes; (d) maximise safety and security.		or (ii); (b) are selected from Part 9 - Schedule 9 - Street Trees; (c) do not obstruct overhead and underground infrastructure; (2) No probable solution identified.
S4.	Car Parks, Driveways, Internal Accessways and Pedestrian and Cycle Paths - (1) Shade trees and planted landscaping areas - (a) provide shade and are located in association with - (i) car parking areas; (ii) driveways; (iii) internal accessways; (iv) pedestrian and cycle paths; (b) utilise species that are suited to the conditions to ensure long term viability; (c) maximise infiltration of stormwater run-off; (d) define car parking areas; (e) soften views of hardstand areas.	**P4.**	(1) Planted landscaping consists of - (a) shade trees - (i) planted at regular intervals and at a distance determined by the selected plant species to provide shade; (ii) provided at a rate of a minimum of one shade tree for every 4 car parking spaces as detailed in Diagram 1 - Landscaping in Car Parking Areas; (iii) that achieve maximum shade coverage within 10 years; (b) planted landscaping areas - (i) to open car parking areas meet the following requirements, as detailed in Diagram 1 - Landscaping in Car Parking Areas - a. irrigated planting beds 2 metres wide are provided between every 4 car parking spaces and/or at the end of each row; b. irrigated planting beds 2 metres wide are provided every 4 rows of parking bays; (ii) utilise groundcover and shrubs which do not affect sight lines; (c) shade trees and planted landscaping areas that - (i) utilise native plants listed in Part 9 - Schedule 10 - Vegetation Species List; (ii) act as a filter for stormwater run-off from car

Assessable Development			
Specific Outcomes		**Probable Solutions**	
			parking areas contaminated by hydrocarbons; (iii) are protected by raised kerbs, wheel stops or bollards and are irrigated.
S5.	Fencing and Walls - (1) Fences and walls - (a) are designed, detailed and articulated to provide visual interest to the streetscape and complement the built form; (b) assist in highlighting entrances and pedestrian paths; (c) assist in providing privacy to private open space areas; (d) allow casual surveillance of all public areas, pedestrian and cycle paths.	**P5.**	(1) Fences and walls - (a) forward of the building line are not more than - (i) 1.2 metres in height above ground level where of solid construction; or (ii) 1.8 metres in height above ground level where the fence is at least 30 percent transparent; (b) are articulated every 10 metres and provided with planted recesses of at least 1 metre in depth; (c) where a retaining wall - is terraced and planted; (d) in combination with planting - are provided to side boundaries where required to maintain privacy or minimise noise impacts on adjoining uses; (e) where security fencing - is transparent, and where erected along the front building line rather than the street boundary, is visually enhanced by low planting. **Note -** ■ The appropriate design of buildings that ensures privacy is maintained is preferred to the construction of high fences or walls. ■ This assessment criteria applies unless otherwise specified in the relevant use and zone code.

Diagram 1 - Landscaping in Car Parking Areas

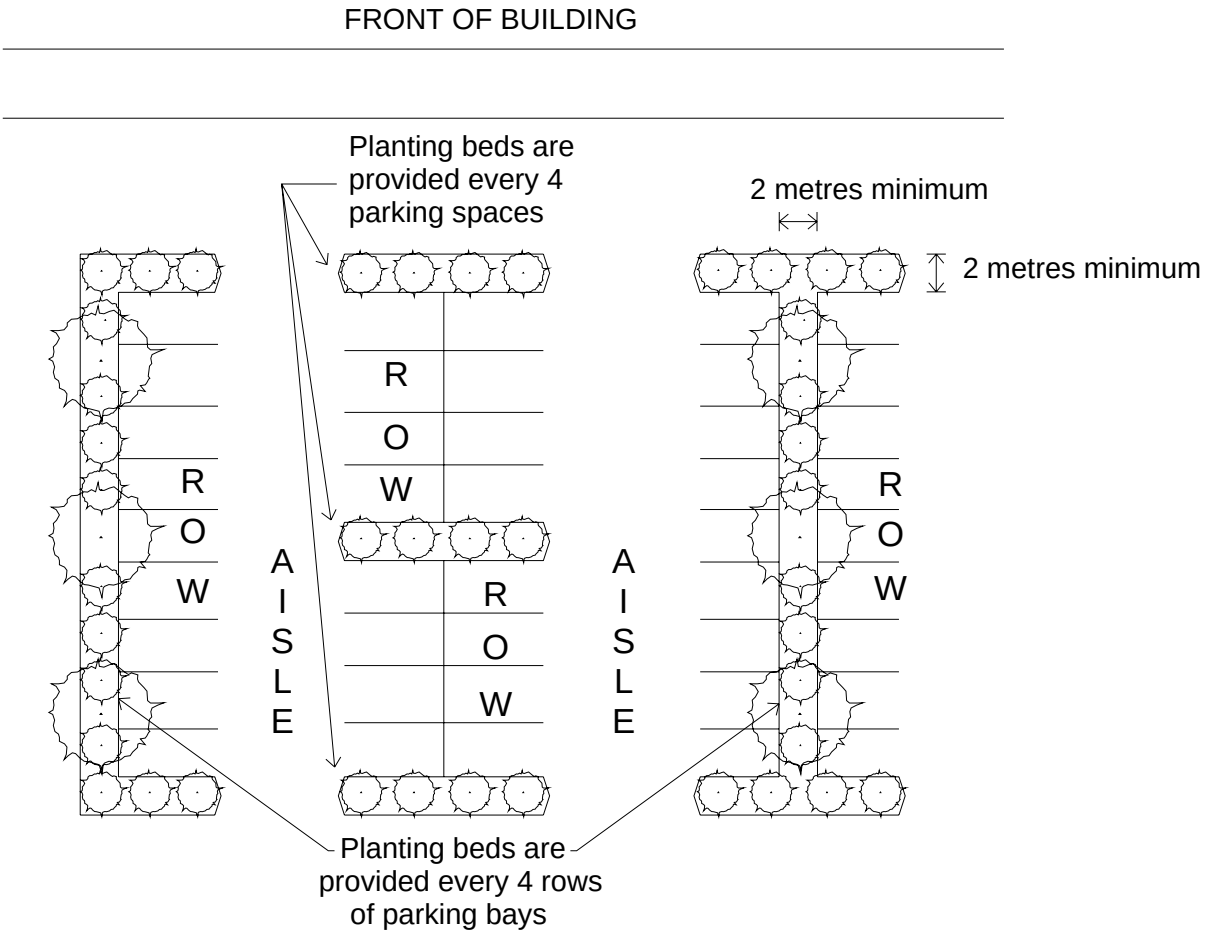

Landscape

this page purposely
left blank

Division 9 - Stormwater Management

8.9.1 Stormwater Management Code

(1) This division contains the provisions for the Stormwater Management Code, that incorporates -

(a) Compliance with the Stormwater Management Code (section 8.9.2);

(b) Overall Outcomes of the Stormwater Management Code (section 8.9.3);

(c) Specific Outcomes and Probable Solutions applicable to Assessable Development (section 8.9.4).

8.9.2 Compliance with the Stormwater Management Code

(1) Development that is consistent with the specific outcomes in section 8.9.4 complies with the Stormwater Management Code.

8.9.3 Overall Outcomes of the Stormwater Management Code

(1) The overall outcomes are the purpose of the Stormwater Management Code.

(2) The overall outcomes sought for the Stormwater Management Code are the following -

(a) to ensure -

(i) effective management of the quantity and quality of stormwater run-off;

(ii) stormwater run-off does not adversely impact on the quality of receiving waters, including waterways, wetlands and Moreton Bay;

(iii) provision of efficient and effective stormwater management that provides adequate protection for people and property from the effects of overland flow or flooding;

(iv) maintenance of the natural flow regime of stormwater through the application of water sensitive urban design (WSUD) principles, where possible.

8.9.4 Specific Outcomes and Probable Solutions applicable to Assessable Development

Assessable Development			
Specific Outcomes		**Probable Solutions**	
S1.	(1) Stormwater drainage design - (a) protects and preserves land below the 1 percent Annual Exceedance Probability (AEP) flood level; (b) retains, enhances and incorporates natural overland drainage lines; (c) maintains the hydraulic capacity of natural overland drainage lines within the lot or premises; (d) maintains pre-development velocity and quantity of run-off; (e) protects and enhances water quality of receiving waters; (f) does not worsen or cause nuisance to adjacent, upstream and downstream land; (g) maximises the application of water sensitive urban design principles including source, conveyance and discharge mechanisms; (h) ensures the mechanisms incorporated are of a size and nature suited to the expected run-off; (i) integrates with open space without adversely impacting on the core purpose of the open space; (j) considers the full extent of maintenance requirements and costs associated with devices used within the system.	**P1.**	(1) Stormwater drainage design - (a) protects and maintains land below the 1 percent AEP in its natural state; (b) ensures stormwater run-off leaving a lot or premises complies with the water quality objectives in Part 9 - Schedule 11 - Water Quality Objectives; (c) identifies and determines the 1 percent AEP of natural overland drainage lines where the lot or premises - (i) has an upstream catchment area greater than 5 hectares; or (ii) is 2500m^2 or greater in area; (d) maximises the retention and use of natural overland drainage lines through their identification, and minimises earthworks that will result in stormwater run-off being redirected. **Note -** The Stormwater Management Plan prepared for the development should detail how all matters contained in S1. are addressed. Refer to Planning Scheme Policy 9 - Infrastructure Works for more information.
S2.	(1) Stormwater drainage design - (a) safely conveys stormwater flow resulting from the relevant AEP design storm under normal operating conditions; (b) ensures the major system design, including overland flow paths, takes into account minor system blockage.	**P2.**	(1) Stormwater drainage design - (a) meets the stormwater flow capacity requirements of the relevant design storm event - (i) where for the minor system - as detailed in Table 1 - Minor System Design Storm Event by Road Frontage Classification and Zone; (ii) where for the major system - 1 percent AEP; (b) ensures the major system caters for 50 percent blockage in the minor system without causing inundation of building floor levels.

Assessable Development			
Specific Outcomes		**Probable Solutions**	
S3.	(1) Stormwater management for roof and surface drainage - (a) has the capacity to control roof and surface run-off and any excess flows from the land or upstream land to prevent stormwater flows from entering buildings; (b) avoids the risk of flooding.	**P3.**	(1) Stormwater management - (a) for reconfiguration that will result in roof-water through adjoining properties - (i) for residential reconfiguration, a maximum of two lots is served by a pipe system that discharges roof water run-off to the nearest downhill road reserve or lawful point of discharge; or (ii) for other reconfiguration, an inter-lot drainage system discharges roof and surface run-off to the nearest available downhill road reserve or lawful point of discharge; (iii) avoids the risk of flooding by ensuring that uses and other development are undertaken on land above the 1 percent AEP flood and storm tide level (2.4 metres AHD).
S4.	(1) For residential uses and other development located on the SMBI, to protect natural drainage systems, stormwater management - (a) utilises a range of source, conveyance and discharge mechanisms, such as stormwater storage systems, retention trenches, to reuse and reduce stormwater run-off volumes, peaks and velocity; (b) ensures stormwater discharge is dispersed naturally in a wide sheet flow to minimise erosion impacts; (c) maximises the use of permeable surfaces to allow infiltration of stormwater run-off.	**P4.**	(1) For residential uses and other development located on the SMBI, except for a lot or premises that is located on the high side of a constructed road with kerb and channel, stormwater management - (a) incorporates methods other than direct piping of stormwater that promotes wide sheet flow of stormwater such as - (i) soakage chambers, absorption trenches, rubble pits; or (ii) rainwater tanks fitted with a first flush system.

Table 1 - Minor System Design Storm Event by Road Frontage Classification and Zone

Zone		Design Storm Event		
Zones	Lot	Arterial, Sub-Arterial and Trunk Collector Roads		Access Streets and Collector Roads
		Longitudinal Drainage	Cross Road Drainage in Sag	Longitudinal and Cross Road Drainage
■ Urban Residential - including all sub-areas; ■ Low Density Residential; ■ Park Residential; ■ SMBI Residential - including sub-area SR1; ■ Point Lookout Residential; ■ Point Lookout Tourist - including all sub-areas ■ Environmental Protection; ■ Conservation - including all sub-areas; ■ Rural Non Urban - including all sub-areas	N/A	10 percent AEP (10 year ARI)	2 percent AEP (50 year ARI)	50 percent AEP (2 year ARI)
■ Medium Density Residential - including all sub-areas; ■ Major Centre - including all sub-areas; ■ District Centre; ■ Neighbourhood Centre - including all sub-areas; ■ Local Centre - including sub-area LC1; ■ SMBI Centre - including sub-area SC1; ■ Point Lookout Centre	10 percent AEP (10 year ARI)	10 percent AEP (10 year ARI)	2 percent AEP (50 year ARI)	10 percent AEP (10 year ARI)
■ Commercial Industry - including sub-area CM1; ■ General Industry - including sub-area GL1; ■ Island Industry - including sub-area IS1; ■ Marine Activity - including all sub-areas; ■ Community Purposes - including all sub-areas	50 percent AEP (2 year ARI)	10 percent AEP (10 year ARI)	2 percent AEP (50 year ARI)	50 percent AEP (2 year ARI)
■ Open Space	N/A	10 percent AEP (10 year ARI)	2 percent AEP (50 year ARI)	100 percent AEP (1 year ARI)

Part 9 - Schedules

Note -

Summary of Schedules.

Schedules

- Access and Parking
- Community Infrastructure
- Dictionary
- Heritage Place Register
- Lot Sizes
- Movement Network and Road Design
- Roof Colour Chart
- Specific Advertising Devices
- Street Trees
- Vegetation Species List
- Water Quality Objectives
- Weed Species List

Schedules Summary

this page purposely
left blank

Schedule 1 - Access and Parking

Table 1 - Minimum On-Site Vehicle Parking Requirements

Use	Minimum Number of Car Parking Spaces	Minimum Service Vehicle Space Requirements
Residential Uses		
Aged Persons and Special Needs Housing		
■ Independent	1 space per dwelling unit plus 1 space for the manager plus 1 space per 2 employees plus 1 visitor space per 5 units	HRV
■ Semi-Independent	1 space per 3 beds plus 1 space for the manager plus 1 space per employee. This is the maximum number on-site at any one time.	WCV
■ Dependent	1 space per 4 beds plus 1 space for the manager plus 1 space per employee. This is the maximum number on-site at any one time.	WCV
Apartment Building	1 space per dwelling unit plus 1 visitor space per 4 dwelling units	WCV
Caretakers Dwelling	2 spaces per dwelling, of which 1 space is covered	SRV
Display Dwelling - ■ Where less than 4 display dwellings ■ Where 4 or more display dwellings	4 spaces per display dwelling 2 spaces per display dwelling	SRV
Dual Occupancy	2 spaces per dwelling unit, of which 1 space per dwelling unit is covered	SRV
Dwelling House	2 spaces per dwelling house, of which 1 space is covered	SRV
Home Business	Requirements for the dwelling unit, plus 1 space per non-resident employee up to a maximum of 2 spaces, plus 1 visitor space. A maximum of 3 spaces is provided on-site in addition to the requirements for the dwelling unit.	As determined by the local government
Mobile Home Park	1 space per site plus 1 visitor space per 4 sites plus 1 space for the manager plus 1 vehicle washing bay. Boat storage is provided at the rate of 1 space per 8 dwelling units where the development is located in Cleveland, Thorneside, Wellington Point, Ormiston, Victoria Point, Redland Bay, Dunwich and Amity Point.	HRV
Multiple Dwelling	Dwelling Unit size or number of rooms / Car parking spaces per dwelling unit: A / B Small (<75m^2) or 1 bedroom: 1.0 / 1.5 Other: 1.0 / 2 Visitor spaces: 0.25 / 0.5 Dwelling Unit location - **A =** Any part of the site is within 800 metres of a	SRV where less then 10 dwelling units HRV where 10 or more dwelling units

Schedule 1 - Access and Parking

Use	Minimum Number of Car Parking Spaces	Minimum Service Vehicle Space Requirements
	pedestrian entry to a railway station, or within 400 metres of a bus stop that provides a minimum of 10 return services per day including Saturdays, during normal business hours. Both distances are walking distance. **B =** Any other circumstance. **Note -** Tandem car parking associated with individual multiple dwelling units are not acceptable in meeting visitor parking requirements. Boat storage is provided at the rate of 1 space per 8 dwelling units where the development is located in Cleveland, Thorneside, Wellington Point, Ormiston, Victoria Point, Redland Bay, Dunwich and Amity Point.	
Relatives Apartment	1 space	SRV
Small Lot House	2 spaces, of which 1 space is covered	SRV
Other Residential Uses	As determined by the local government	
Tourist Accommodation Uses		
Bed and Breakfast	1 space per bedroom plus the requirements of the dwelling	SRV
Tourist Accommodation	1 space per room plus 1 space for the manager plus 1 space per 2 employees plus the requirement for any associated activities such as a restaurant or function room	HRV
Tourist Park	1 space per site plus 1 visitor space per 4 sites plus 1 space for the manager plus 1 vehicle washing bay	HRV
Rural Uses		
Agriculture	As determined by the local government	
Animal Keeping -		
▪ Catteries	1 space per 10 cats to be lodged at the development, with a minimum of 4 spaces plus the requirements of the dwelling house/caretaker's residence	SRV
▪ Kennels	1 space per 10 dogs to be lodged at the development, with a minimum of 4 spaces plus the requirements of the dwelling house/caretaker's residence	SRV
▪ Stables	As determined by the local government	WCV
Forestry	As determined by the local government	
Intensive Agriculture	As determined by the local government	

Use	Minimum Number of Car Parking Spaces	Minimum Service Vehicle Space Requirements
Produce Store	1 space per 25m^2 gross floor area	HRV
Roadside Stall	As determined by the local government	
Rural Enterprise	As determined by the local government	
Commercial Uses		
Bulky Goods Showroom	1 space per 40m^2 of gross leaseable area, or in the case where the gross leaseable area does not exceed 300m^2 - 1 space per 30m^2 gross leaseable area	HRV
Car Wash Facility	4 spaces per car wash bay plus 1 space per employee	MRV
Commercial Office	1 space per 30m^2 gross leaseable area	SRV
Display and Sale Activity	1 space per 100m^2 of total development area - including access, parking, service and outdoor work areas - plus 1 space per 40m^2 of spare parts or vehicle accessory display area plus 1 space per 5 service bays.	AV
Drive Through Restaurant	1 space per 8m^2 of gross floor area or 1 space per 4 seats whichever is the greater plus queuing area for 10 cars	HRV
Garden Centre	1 space per 25m^2 of sales area plus 0.75 spaces per 100m^2 of indoor and outdoor garden display area plus 1 space per employee	HRV
Hotel	1 space per 10m^2 gross floor area of lounge, bar or beer garden areas plus 1 space per 30m^2 gross floor area of liquor barn or bulk liquor sales area plus 1 space per 40m^2 gross floor area of administration area plus 12 spaces queuing area capacity for drive-through service area plus 1 space per unit for accommodation purposes	HRV
Night Club	1 space per 15m^2 gross leaseable area	WCV
Refreshment Establishment	1 space per 2.5 persons assessed on the maximum capacity of the refreshment establishment or 1 space per 10m^2 whichever is the greater, or as determined by the local government if the establishment is contained within a shopping complex exceeding 2000m^2 gross leaseable area	WCV
Retail Warehouse	1 space per 40m^2 of gross leaseable area, or in the case where the gross leaseable area does not exceed 300m^2 - 1 space per 30m^2 gross leaseable area	HRV

Schedule 1 - Access and Parking

Use	Minimum Number of Car Parking Spaces	Minimum Service Vehicle Space Requirements
Service Station	1 space per 20m^2 gross leaseable area plus 1 space per 10m^2 of restaurant area plus 4 spaces per service bay plus 0.75 spaces per utility, trailer or other vehicle for hire.	AV
Shop -		
■ 200m^2 or less gross leaseable area	5.0 spaces per 100m^2 gross leaseable area	SRV
■ 201m^2 - 2000m^2	6.0 spaces per 100m^2 gross leaseable area	HRV
■ 2001m^2 - 20000m^2	5.5 spaces per 100m^2 gross leaseable area	AV
■ 20001m^2 or more gross leaseable area	4.2 spaces per 100m^2 gross leaseable area	AV
■ Video Store	6.0 spaces per 100m^2 gross leaseable area	SRV
Veterinary Surgery	1 space per employee plus 1 space per practitioner plus 3 spaces per consulting room	SRV
Other Commercial Uses or if -	As determined by the local government	As determined by the local government
■ Mixed Commercial	5 spaces per 100m^2 gross leaseable area directly accessible from ground level, plus an additional 3.5 spaces per 100m^2 gross leaseable area on the first floor level plus 2.5 spaces per 100m^2 of gross leaseable area on any other level plus provision of car parking spaces for dwelling units or tourist accommodation at the rate specified for that use.	HRV
Industrial Uses		
Extractive Industry	As determined by the local government	
General Industry	1 space per 50m^2 gross floor area or 1 space per 1.5 employees, whichever is the greater	AV
Heavy Industry	As determined by the local government	
Landscape Supply Depot	1 space per 1.5 employees plus 1 space per 25m^2 of sales area plus 1 space per 100m^2 of total development area - including access, parking, service and outdoor work areas - plus provision of heavy vehicle parking and manoeuvring areas and car-trailer manoeuvring areas.	AV
Marine Services	As determined by the local government	

Use	Minimum Number of Car Parking Spaces	Minimum Service Vehicle Space Requirements
Service Industry	Acceptable Solutions for self-assessable development - 1 space per 50m^2 gross floor area or 1 space per 1.5 employees, whichever is the greater	HRV
	Probable Solution for assessable development - As determined by the local government	
Vehicle Depot	1 space per vehicle plus 0.75 spaces per employee, or as determined by the local government if storing more than 50 vehicles	AV
Vehicle Repair Premises	2.5 spaces per service bay plus 1 space per 40m^2 gross floor area of spare parts or vehicle accessory display area plus 1 space per employee	HRV
Warehouse	1 space per 2 employees or 1 space per 100m^2 of gross floor area whichever is the greater **Note -** To offer flexibility for the interchange of tenancies, an increase in parking space numbers is recommended at the rate of 1 space per 50m^2 of GFA.	AV
Other Industrial Use	As determined by the local government	
Community Uses		
Cemetery	As determined by the local government	
Child Care Centre	1 space per employee plus 1 space per 7 children (maximum licensed capacity)	SRV
Community Facility	As determined by the local government	
Education Facility	1 space per member of staff plus 1 space per 10 students over the age of 17 plus 1 space per 5 students in a school providing education at a level above that of a secondary school plus adequate student set down / pick up areas	HRV
Emergency Services	As determined by the local government	HRV
Health Care Centre	1 space per employee plus 1 space per practitioner plus 2 spaces per consulting room or, 1 space per 3 beds whichever is the greater	SRV
Hospital	As determined by the local government	HRV

Use	Minimum Number of Car Parking Spaces	Minimum Service Vehicle Space Requirements
Institution	As determined by the local government	
Place of Worship	15 spaces per 100m^2 gross floor area	SRV
Other Community Uses	As determined by the local government	
Sport and Recreation Uses		
Indoor Recreation Facility -		
■ Bowling Alley	3 spaces per lane	HRV
■ Cinema	1 space per 5 seats or 1 space per 15m^2 gross floor area whichever is the greater	HRV
■ Function Room	1 space per 10m^2 gross floor area	HRV
■ Fitness Centres / Gymnasium	1 space per 10m^2 gross floor area plus the requirements of any associated restaurants, medical centre, squash courts etc	HRV
■ Indoor Cricket or Soccer	20 spaces per court	HRV
■ Indoor Squash	4 spaces per squash court	HRV
■ Swimming	15 spaces plus 1 space per 100m^2 gross floor area	HRV
■ Other	As determined by the local government	
Outdoor Recreation Facility -		
■ Field Sports	30 spaces per pitch or field plus 1 space per 5 people able to be seated in stands	As determined by the local government
■ Golf Course	4 spaces per tee plus 3 spaces per 100m^2 gross floor area of club house area or 6 spaces per 100m^2 gross floor area of club house area, which ever is the greater.	HRV
■ Lawn Bowls	30 spaces for the first green plus 20 spaces for each additional green.	HRV
■ Swimming	15 spaces plus 1 space per 100m^2 gross floor area	HRV
■ Tennis or other "court" game	4 spaces per court	HRV
■ Other	As determined by the local government	
Park -		
■ Local	As determined by the local government	
■ District Recreation	As determined by the local government	
■ District Sports	25 spaces	As determined by

Use	Minimum Number of Car Parking Spaces	Minimum Service Vehicle Space Requirements
■ Regional Recreation	25 spaces	the local government
■ Regional Sports	50 spaces	
■ Informal	As determined by the local government	
Infrastructure Uses		
Airport	As determined by the local government	
Minor Utility	As determined by the local government	
Passenger Terminal	As determined by the local government	
Telecommunications Facility	As determined by the local government	
Utility Installation	As determined by the local government	
Other Uses		
Brothel	As required by the *Prostitution Regulation 2000*	
Estate Sales Office	4 spaces per sales office	SRV
Funeral Parlour	1 space per employee plus 1 space for the hearse plus 1 space per 4 seats	WCV
Outdoor Dining	As determined by the local government	
Temporary Use	As determined by the local government	
Vehicle Parking Station	As determined by the local government	

Notes -

- Where the number of parking spaces calculated in accordance with Table 1 is not a whole number, then the number of spaces to be provided is to be rounded up from the calculated number.
- Parking provision is calculated based on the busiest predicted demand on any given day, including any overlap parking requirement between employee shifts.
- Where the rates in the above table are not met or used, refer to Part 11 - Planning Scheme Policy 9 - Infrastructure Works.
- Parking provision for proposals that incorporate a variety of land uses are calculated on each use within the development. Where it is demonstrated that vehicle parking will be used to access a variety of activities within a development, the total vehicle parking provision may be reduced.
- Where proposed uses operate outside normal work hours and a reduction in vehicle parking requirements is proposed, the following matters are addressed -
  - The nature and extent of proposed development on the site;
  - The nature and extent of surrounding development;
  - The location and use of existing vehicle parking facilities in the locality;
  - Any vehicle parking restriction applying to nearby streets;
  - The proximity, modal choice and regularity of public transport serving the locality.
- Where development is for a tenancy change, credit is given for parking spaces already provided for the existing use provided that this use was lawfully established -
  - Credit is given for parking spaces provided on-site and monetary contributions made in lieu of providing parking spaces on-site;
  - New development is only required to provide additional parking spaces where Table 1 indicates a higher number of parking spaces for the proposed use compared to the existing use;

- Irrespective of the number of parking spaces currently provided on-site, new development is only required to provide the shortfall between the number of parking spaces required for the existing use and the proposed use in Table 1.

- A portion of the car parking requirements may be unformed at the discretion of the local government where all of the following criteria are met -
  - Car parking is for a use which experiences short duration surges in car parking demand;
  - The applicant provides an Event Parking Management Plan;
  - The property has sufficient space for overflow car parking such that it can safely accommodate on-site the total number of vehicles indicated by the car parking spaces required in Table 1;
  - Formed servicing and manoeuvring areas and dedicated disabled, motorcycle and bicycle parking spaces are provided in accordance with the specifications of the Access and Parking Code.

- **AV** Articulated vehicle as defined in *Australian Standard 2890.2: 2002 - Off-Street Parking Part 2: Commercial Vehicle Facilities*.
- **C&T** Car and trailer, equivalent to *AUSTROADS* 'Car and Caravan' and similar.
- **COACH** 14.5 metre long rigid bus (*AUSTROADS*).
- **HRV** Heavy rigid vehicle as defined in *Australian Standard 2890.2: 2002 - Off-Street Parking Part 2: Commercial Vehicle Facilities*.
- **MRV** Medium rigid vehicle as defined in *Australian Standard 2890.2: 2002 - Off-Street Parking Part 2: Commercial Vehicle Facilities*.
- **WCV** Industrial Waste Collection Vehicle - similar to HRV as defined in *Australian Standard 2890.2:2002 - Off-Street Parking Part 2: Commercial Vehicle Facilities*, except 10.2 metre vehicle length and minimum 12 metre turning radius.
- **SRV** Small rigid vehicle as defined in *Australian Standard 2890.2: 2002 - Off-Street Parking Part 2: Commercial Vehicle Facilities*.
- **VAN** A 99.8th percentile vehicle, equivalent to a 'large car'.

Table 2 - Driveway Access Locations

Type of Frontage Road	Adjacent Feature	Minimum Separation of Driveway from Adjacent Feature
Access Place, Access Street and Collector Roads	Minor intersection	6 metres from kerb tangent point
	Major intersection	20 metres from kerb tangent point
	Median island Other driveways	10 metres from island nose 3 metres along kerb
Trunk Collector, Arterial and Sub-Arterial Roads	Minor intersection	10 metres from kerb tangent point
	Major intersection	30 metres from kerb tangent point
	Median break	15 metres from median nose
	Other driveway	15 metres along kerb
	Traffic signals	Clear of queue areas and turning lanes

Table 3 - Internal Accessways for Development with a Community Management Statement

	Type 1[1]	Type 2[2]	Type 3[3]
Maximum design speed	35km/h	25km/h	15km/h
Minimum carriage width	6 metres	5.5 metres low speed entrance treatment	5 metres at entrance to public road, otherwise 4.5 metres
Minimum total access way reserve	10 metres	8 metres	8 metres
Minimum shoulder width	1.5 metres	1 metre	1 metre
Verge width	1.5 metres	No	No
Cul-de-sac design for service vehicle	3 point turn	Maximum 5 point turn	Maximum 5 point turn

Notes -

[1] Minor loop road not exceeding 200 metres in length and serving not more than 100 car parking spaces.

[2] Road for vehicular and pedestrian use not exceeding 100 metres in length and serving not more than 50 car parking spaces.

[3] Road for vehicular and pedestrian use not exceeding 50 metres in length and serving not more than 25 car parking spaces.

Table 4 - Minimum On-site Queuing Requirements

Car Parking Area Capacity (Spaces)	Number of Vehicle in Queue[1]
3 to 25	1 (6 metres)
26 - 50	2 (12 metres)
51 - 75	3 (18 metres)
76 - 100	4 (24 metres)
101 - 150	5 (30 metres)
151 - 200	6 (36 metres)
201 - 250	7 (42 metres)
Greater than 250	8 (48 metres), plus 1 percent of capacity over 250 spaces (rounded upwards)

Note[1] - Each vehicle is assumed to occupy 6 metres in length.

Table 5- Minimum Circulation Roads Widths in Car Parking Areas

Type of Circulation Road	Width of Circulation Road
One-way, one lane	3 metres - no more than 20 metres long 5 metres - more than 20 metres long
One way, two lane	6 metres
Two way, two lane	6.2 metres - up to 100 vehicles per day 6.5 metres - 101-300 vehicles per day

Table 6 - Maximum Longitudinal Grades in Car Parking Areas

Location	Maximum Longitudinal Gradient
Parking areas of people with disabilities	1 in 40 (2.5 percent)
■ Parking spaces, circulation and parking aisles ■ Public car parking area (prams and shopping trolleys likely) ■ Tenants car parking area in residential building ■ Employee car parking area	1 in 15 (6.7 percent) 1 in 15 (6.7 percent) 1 in 12 (8.3 percent) 1 in 10 (10 percent)
Straight circulation road or ramp	1 in 6 (16.7 percent)
Curved circulation road or ramp (at inside kerb)	1 in 6 (16.7 percent)
Circulation road, ramp or driveway within 6 metres of a property boundary, traffic control point or marked pedestrian crossing	1 in 20 (5 percent)
Uphill queue area	1 in 12 (8.3 percent)

Table 7 - Minimum Car Space Widths

Minimum Width	User Type
2.4 metres	■ Reserved parking with low turnover rates, such as employee car parking areas at industrial and commercial premises.
2.5 metres	■ Public car parking areas with low turnover rates, such as sporting venues.
2.6 metres	■ Public car parking areas with moderate turnover rates, such as a local shopping or medical centre. ■ Reserved spaces where passengers and goods can be expected to be loaded or unloaded, such as tenant car parking areas in residential buildings. ■ Visitor parking at commercial, industrial and residential premises.
2.7 metres	■ Small public car parking areas with high turnover rates, typical duration of stay 30 minutes, particularly centres up to 1000m^2 gross floor area, and fast foods outlets.
3.2 metres	■ Parking spaces reserved for people with disabilities.

Table 8 - Design Dimensions for Service Aisles and Loading/Unloading Bays

	Design Vehicles							
	VAN	C&T	SRV	MRV	HRV	WCV	COAC H/BUS	AV
Minimum Service Aisle Width[1] (metres)	One way - 4.5 metres Two way - 6.5 metres							
Minimum Vertical Clearance[2] (metres)	2.3	2.3[4]	3.5	4.5	4.5	4.5[5]	4.5	4.5
Minimum Bay Width[1] (metres) Loading/Standing	3.0	3.5						
Minimum Bay Length[3] (metres)	5.4	14.5	7.0	9.0	11.0	10.5[6]	13.0	17.5
Maximum Gradient General surface, manoeuvring, aisles, loading bays	1 in 20			1 in 25				
Ramps	Straight - 1 in 6 Curved - as for straight and measured at inside of constructed curve							
Queuing area Traffic control point	1 in 10 1 in 20			1 in 25				

Notes -

1. The width dimensions provide approximately 0.5 metres clearance each side of a vehicle to allow cabin door opening, clearance for mirrors and access to load restraints.
2. The required clearance height should be maintained at all points, irrespective of changes in grade.
3. The bay length dimensions provide 0.5 metres clearance from the rear of the vehicle to access load and provide for variation in overall vehicle size.
4. Special trailers (such as horse-floats and caravans) may require greater clearance height.
5. Operating Clearance: Front Load 7.1 metres, Side-Load 4.1 metres, Roll-on Roll-off 7.1 metres, Rear Load 3.5 metres.
6. Dimensions are exclusive of bin storage area.

Schedule 1 - Access and Parking

this page purposely
left blank

Schedule 2 - Land Designated for Community Infrastructure

(1) This table identifies -

(a) land designated for community infrastructure;
(b) the type of community infrastructure for which the land was designated;
(c) the day the designation was made;
(d) any other matters included as part of the designation.

Real property description	Street address	Type of community infrastructure[9.1]	Day of designation	Other matters
Lot 2 C698	Corner of Russell and Wellington Streets, Cleveland	1 (g) - Emergency services facilities	2 July 1999	
Lot 1 on RP 119834 Lot 2 on RP 119834 Lot 3 on RP 119834 Lot 501 on SP 102115	9 Middle Street, Cleveland	1 (s) any other facility not mentioned in paragraphs (a) to (r) and intended primarily to accommodate government functions	1 June 2001	Further described as - "Law courts, cells, storage, office functions, amenities, secure parking and support facilities."
Lot 1 on C668 Lot 2 on C668 Lot 3 on C668 Lot 6 on C671 Lot 31 on C145614 Lot 32 on C145614 Lot 43 on C145614 Lot 145 on SL11048	Corner of Finucane Road and Delancey Street, Cleveland	1 (s) any other facility not mentioned in paragraphs (a) to (r) and intended primarily to accommodate government functions	31 March 2000	Further described as - "Administrative offices, conference, accommodation and training facilities, laboratories, glass houses, packing facilities, material store, regulated public access, car parking, farm manager's on site accommodation, teaching and training facilities, commercial activities, fauna hospital, farm machinery storage and fuel store, research, and extension facilities including but not limited to a diverse range of sciences together with support facilities and a range of primary industries."
Lot 29 on SL 11549	Corner of Wellington and Weippin Streets, Cleveland	1 (h) hospital and associated institutions	9 June 2000	Further described as - "Public and private health facilities plus support facilities including non-acute accommodation,

[9.1] Refer to Schedule 5 – Community Infrastructure of the *Integrated Planning Act 1997*.

Schedule 2 - Community Infrastructure

Real property description	Street address	Type of community infrastructure[9.1]	Day of designation	Other matters
				ancillary commercial and medical services, laundry, engineering and maintenance services, teaching and researching facilities, carparking, helipad and accommodation for emergency services."
Lot 1 on CP 905844 (part) Lot 139 on SP 137447 (part)	Randall Road, Birkdale	1(k) operating works under the *Electricity Act 1994*.	3 February 2006	Further described as – "Proposed 33/11 kilovolt Birkdale substation".
Lot 2 on RP815062(part)	127 Birkdale Road, Birkdale	1 (o) transport infrastructure	30 March 2006	
Lot 2 on SP148430(part)	2 Haig Road, Birkdale	1 (o) transport infrastructure	30 March 2006	
Lot 1 on RP86393(part)	163 Collingwood Road, Birkdale	1 (o) transport infrastructure	30 March 2006	
Lot 2 on RP86393(part)	167 Collingwood Road, Birkdale	1 (o) transport infrastructure	30 March 2006	
Lot 7 on RP14104(part)	175 Collingwood Road, Birkdale	1 (o) transport infrastructure	30 March 2006	
Lot 2 on RP139096(part)	613 Main Road, Wellington Point	1 (o) transport infrastructure	30 March 2006	
Lot 14 on RP113406(part)	75 Starkey Street, Wellington Point	1 (o) transport infrastructure	30 March 2006	
Lot 1 on RP104887	598 Main Road, Wellington Point	1 (o) transport infrastructure	30 March 2006	
Lot 2 on RP178370(part)	82 Redland Bay Road, Capalaba	1 (o) transport infrastructure	30 March 2006	

Schedule 3 - Dictionary

Division 1 - Uses

Note -

Index for Uses by Category

Residential

- Aged Persons and Special Needs Housing
- Apartment Building
- Caretakers Dwelling
- Display Dwelling
- Dual Occupancy
- Dwelling House
- Home Business
- Mobile Home Park
- Multiple Dwelling
- Relatives Apartment
- Small Lot House

Tourist Accommodation

- Bed and Breakfast
- Tourist Accommodation
- Tourist Park

Rural

- Agriculture
- Animal Keeping
- Forestry
- Intensive Agriculture
- Produce Store
- Roadside Stall
- Rural Enterprise

Commercial

- Bulky Goods Showroom
- Car Wash Facility
- Commercial Office
- Display and Sale Activity
- Drive Through Restaurant
- Garden Centre
- Hotel
- Night Club
- Refreshment Establishment
- Retail Warehouse
- Service Station
- Shop
- Veterinary Surgery

Industrial

- Extractive Industry
- General Industry
- Heavy Industry
- High Impact Industry
- Landscape Supply Depot
- Marine Services
- Service Industry
- Vehicle Depot
- Vehicle Repair Premises
- Warehouse

Community

- Cemetery
- Child Care Centre
- Community Facility
- Education Facility
- Emergency Services
- Health Care Centre
- Hospital
- Institution
- Place of Worship

Sport and Recreation

- Indoor Recreation Facility
- Outdoor Recreation Facility
- Park

Infrastructure

- Airport
- Minor Utility
- Passenger Terminal
- Road
- Telecommunications Facility
- Utility Installation

Other

- Brothel
- Estate Sales Office
- Funeral Parlour
- Outdoor Dining
- Temporary Use
- Vehicle Parking Station

Use	Definition
Aged Persons and Special Needs Housing	Means the use of premises for residential accommodation that caters for persons having special or age related needs and do not have children living permanently with them. The term includes - (a) retirement villages, nursing homes, respite centres, hostel, group home, or uses of a like nature; (b) any ancillary facilities, such as medical, nursing, and personal care services to meet the needs of residents, dining and recreation facilities, administrative offices, laundries, kitchens, and residential accommodation for persons associated with the operation of the use.
Agriculture	Means the use of premises for the production of horticulture or livestock. The term includes packing or handling of the raw produce to a standard suitable for transport from the premises, outbuildings and other ancillary facilities.
Airport	Means the use of a public or private landing area for aircraft, including helicopters. The term includes ancillary facilities such as the - (a) housing, servicing, maintenance and repair of aircraft; (b) assembly of passengers or goods prior to, or the dispersal of passengers or goods subsequent to the embarkation, or disembarkation of such passengers or goods; (c) convenience and refreshment of passengers and their guests.
Animal Keeping	Means the use of premises for the commercial keeping, breeding, training or boarding of companion animals such as cats, dogs, horses, caged birds or the like. The term includes a kennel, cattery, stable or aviary. The term does not include the keeping of companion pets where ancillary to a dwelling unit. **Note -** Refer to *Local Law No.2 - Keeping and Control of Animals*, for the keeping of companion pets where ancillary to a dwelling unit.
Apartment Building	Means the use of premises for three or more dwelling units in a building that - (a) is three or more storeys in height; (b) results in another dwelling above or below; (c) has a common foyer entrance; (d) has communal facilities including outdoor spaces, car parking and waste collection. Apartment buildings are reconfigured as a community title scheme, generally horizontally[9.2].
Bed and Breakfast	Means the use of premises for the provision of short-term accommodation on a commercial basis within a dwelling house, where such accommodation is not self-contained.
Brothel	Has the meaning given to it in the *Prostitution Act 1999*.
Bulky Goods Showroom	Means the use of premises for the purpose of display, retail sale or hire of goods of a bulky nature that generally require delivery by a vehicle and where the gross floor area of the use is no less than 400m^2. The term includes, but is not limited to, large electrical appliances, furniture and carpets.

[9.2] Community Title is defined in the *Body Corporate and Community Management Act*, 1997.

Use	Definition
Caretakers Dwelling	Means the use of premises for caretaker purposes, where a person residing in the dwelling unit is employed on the site and the dwelling unit is used in connection with a non-residential use conducted on the site. The term does not include any dwelling unit made available for private rental purposes.
Car Wash Facility	Means the use of premises for the cleaning of motor vehicles by a manual, automatic or partly automatic process, including high-pressure washing. The term includes, but is not limited to, the washing of cars, motorcycles, boats and trucks.
Cemetery	Means the use of premises for the burial or cremation of deceased people or animals. The term includes - (a) a graveyard, columbarium and burial ground; (b) any ancillary facilities such as a funeral chapel or parlour.
Child Care Centre	Means the use of premises for the minding or care, but not residence, of children under school age. The term includes a kindergarten, crèche, preschool and after school care.
Commercial Office	Means the use of premises for a business or office where the principal activity provides - (a) business or professional advice; (b) services or goods that are not physically on the premises; (c) the office based administrative functions of an organisation.
Community Facility	Means the use of premises for the provision of cultural, social or community services. The term includes community centre, community hall, cultural centre, library, museum and welfare premises.
Display and Sale Activity	Means the use of premises for displaying and offering for sale by retail, auction or hire goods such as - (a) building and construction materials, equipment and plant but not including general hardware; or (b) farming goods and equipment; or (c) vehicles including cars, trucks, motorcycles, boats, caravans, trailers and mobile homes.
Display Dwelling	Means the temporary use of premises for displaying a type of dwelling house or unit to be built or displaying a dwelling house or unit as a prize.
Drive Through Restaurant	Means the use of premises for the preparation of food to takeaway or consume on the premises where that premises includes a drive through facility.
Dual Occupancy	Means the use of premises for residential accommodation that comprises two dwelling units on one lot whether attached or detached.
Dwelling House	Means the use of a lot for a single detached dwelling unit on a lot greater than or equal to 500m². **Note -** If the lot is smaller than 500m² refer to Small Lot House definition.
Education Facility	Means the use of premises for the systematic training and instruction designed to impart knowledge and develop skill. The term includes - (a) a primary school, secondary school, university, academy, boarding school, college, lecture hall, sheltered workshop, and technical college; (b) ancillary facilities such as residential accommodation associated with the primary use.

Use	Definition
Emergency Service	Means the use of premises for a fire station, ambulance station, first aid station, police station or State Emergency Service and uses of a like nature.
Estate Sales Office	Means the use of premises within a subdivision estate or development site, to assist in the display and sale of that land and/or buildings on that land.
Extractive Industry	Means the use of premises for dredging, excavating, quarrying, sluicing or otherwise mining materials including sand, gravel, soil, rock, stone and similar substances from the earth and the removal of these materials from the premises. This term includes - (a) the treatment and storage of extracted material on the premises, including the crushing or screening of materials, where that material has been won from the subject land only; (b) the rehabilitation and restoration works associated with the use. The term does not include the winning and processing of minerals authorised under the *Mineral Resources Act 1989*.
Forestry	Means the use of premises for the establishment, silviculture and harvesting of tree species that have been planted in a regular spacing on cleared land, for the primary purpose of producing and extracting timber products. The term includes the primary processing of trees grown on the premises to produce products such as pulp, poles, posts and sawlogs.
Funeral Parlour	Means the use of premises to arrange and conduct funerals, memorial services and uses of a like nature. The term includes ancillary facilities such as a mortuary, crematorium, funeral chapel or administration area used in connection with the primary use.
Garden Centre	Means the use of premises for the display and retail sale of plants for use in gardening and landscaping where not including bulk storage and sale of landscaping material such as sand, soil, screenings, gravel, logs, sleepers, boulders and other similar landscaping materials. The term includes the ancillary display and retail sale of associated garden supplies such as seeds, pots, garden tools, garden furniture and ornaments, packaged fertilisers and packaged potting mixes.
General Industry	Means the use of premises for any industrial activity which is similar to those activities set out below and ancillary activities that support the industrial use such as administration offices or sales and display areas for products manufactured, assembled or finished on the site - (a) Chemical, products and activities - (i) chemical storage - storing chemicals, including ozone depleting substances, gases or dangerous goods up to 10 m^3; (b) fabricated metal product activities - (i) metal foundry - commercially producing metal castings - using ferrous metals, moulds and non ferrous metals in works producing up to 20 tonnes a year; (ii) boiler making or engineering - commercial boiler making, electrical machine manufacturing or building or assembly of agricultural equipment, motor vehicles, trains, trams or heavy machinery; (iii) metal forming - pressing, forging, extending, extruding or rolling metal, forming metal into plate, wire or rods or fabricating sheet metal; (iv) abrasive blasting - commercially cleaning equipment or

Use	Definition
	structures using a stream of abrasives. The term does not include high-pressure water, steam or air; unless an abrasive material is included in the pressure stream; (v) metal surface coating - enameling, electroplating, anodising or galvanising in works having an annual throughput of metal products of up to 10,000 tonnes; (vi) metal recovery - commercially operating a scrap metal yard or dismantling automotive or mechanical equipment including debonding brake or clutch components; (vii) metal recovery from disassembling and dismantling electrical equipment such as computers; (c) non metallic mineral product manufacturing - (i) clay or ceramic products manufacture - manufacturing clay or ceramic products, including bricks, tiles, pipes, pottery goods, artwork and refractories, in works producing up to 10 tonnes per year; (ii) concrete batching - commercially producing concrete or producing concrete products by mixing cement, sand, rock, aggregate or other similar materials~~;~~ (d) food processing - (i) beverage production - commercially producing any beer or other alcoholic or non-alcoholic beverage in works producing up to 200,000 litres per year; (ii) milk processing - separating, evaporating or processing milk, other than on a farm, or manufacturing evaporated or condensed milk, cheese, butter, ice cream or other dairy product in works producing up to 200 tonnes per year; (iii) edible oil processing - commercial vegetable oil or oilseed processing in works producing up to 1,000 tonnes per year; (iv) bottling or canning food- bottling or canning food in works producing up to 200 tonnes per year; (v) seafood processing - commercially processing seafood, including removing the scales, gills, intestines or shells, filleting, chilling, freezing or packaging seafood in works with a design production capacity of up to 100 tonnes per year; (vi) smoking, drying or curing works - smoking, drying or curing meat, fish or other edible products by applying heat, smoke or other dehydration method in works, other than when conducted on limited basis in premises separately defined as a shop located in a centre, with a design production capacity of up to 200 tonnes or more a year; (vii) flour milling - commercial processing of grain crops by crushing, grinding, milling separating or sizing in works having a design production capacity of up to 1000 tonnes; (viii) pet, stock, aquaculture food manufacture - commercially manufacturing or processing pet, stock or aquaculture food, other than an abattoir, slaughter house, rendering works or animal glue or gelatin works, using a facility which produces up to 200 tonnes a year; (e) wooden product manufacturing - (i) wooden product manufacturing - commercially manufacturing or fabricating a wooden product, including for example, a product made by a cabinet maker, joiner or other wood worker, in a facility; (ii) wooden product manufacturing - commercially manufacturing or fabricating a wooden product, including the manufacture of chipboard, laminated board and wood veneer products up to 2500 tonnes per year;

Use	Definition
	(iii) sawmilling or wood-chipping - sawing, cutting, chipping, compressing, milling or machining logs, drying logs in a kiln or manufacturing secondary wooden products, in a mill or works producing up to 500 tonnes per year; (f) miscellaneous industrial activities - (i) battery recycling - operating a facility for receiving and recycling or reprocessing any kind of battery; (ii) boat building construction; (iii) commercially manufacturing substrate for mushroom growing; (iv) plastic manufacturing - commercially manufacturing plastic or plastic products in works producing up to 5 tonnes per year; (v) plaster manufacturing - manufacturing or processing plaster in works producing up to 200 tonnes per year. This includes the production of plasterboard and other plaster products; (vi) tyre recycling - operating a facility for receiving and commercially recycling or reprocessing tyres including retreading; (vii) printing - commercially screen printing or printing, other than photocopying and photographic printing, including advertising material, magazines, newspapers, packaging and stationery; (viii) storage of building, construction materials, equipment and plant as part of a contractors depot where those goods and materials are not available for sale or hire to the general public. The term does not include any use defined as a large dangerous goods location or major hazard facility[9.3].
Health Care Centre	Means the use of premises for the medical care or treatment of persons not resident on the premises. The term includes premises used for the following like activities - maternal and child welfare clinic; acupuncturist; chiropodist; chiropractor; dentist; medical practitioner; naturopath clinics and alternative therapies; nursing service; optometrist; pathologist; physiotherapist and radiologist.
Heavy Industry	Means the use of any premises for a large scale industrial activity which is intended to provide industry services to other industries or is similar to those activities set out below and ancillary activities that support the industrial use such as administration offices or sales and display areas for products manufactured, assembled or finished on the site - (a) chemical, coal and petroleum products activities - (i) alcohol distillation - commercially distilling alcohol in works having a design production capacity of up to 2,500 litres per year. This does not include the distilling of alcohol for the production of fuel; (ii) chemical manufacturing, processing or mixing - manufacturing or processing an inorganic chemical, organic chemical or chemical product, or mixing inorganic chemicals, organic chemicals or chemical products, other than mixing non combustible or non flammable chemicals or chemical products by dilution with water, in a plant or works with a design production capacity of up to 200 tonnes per year; (iii) paint manufacture - manufacturing paint in works producing up to 10,000 litres per year; (iv) petroleum products - storing under 100 000 litres of petroleum products in tanks or containers, other than at service stations; (v) fuel burning - any process involving the use of fuel burning

[9.3] As defined in the *Dangerous Goods Safety Management Regulation* 2001.

Use	Definition
	equipment, for example a standby power generator; (vi) chemical storage - storing chemicals, including ozone depleting substances, gases or dangerous goods greater than 10 m^3; (b) fabricated metal product activities - (i) metal foundry - commercially producing metal castings - using ferrous metals, moulds and non ferrous metals in works producing greater than 20 tonnes a year; (ii) metal surface coating - enamelling, electroplating, anodising or galvanising in works having an annual throughput of metal products of greater than 10,000 tonnes; (c) non metallic mineral product manufacturing - (i) clay or ceramic products manufacture - manufacturing clay or ceramic products, including bricks, tiles, pipes, pottery goods, artwork and refractories, in works producing greater than 10 tonnes per year and less than 100 tonnes per year; (d) food processing - (i) beverage production - commercially producing any beer or other alcoholic or non-alcoholic beverage in works with a design production capacity of greater than 200,000 litres per year; (ii) milk processing - separating, evaporating or processing milk, other than on a farm, or manufacturing evaporated or condensed milk, cheese, butter, ice cream or other dairy product in works with a design production capacity of greater than 200 tonnes per year; (iii) edible oil processing - commercial vegetable oil or oilseed processing in works with a design production capacity of greater than 1,000 tonnes per year; (iv) bottling or canning - bottling or canning food in works with a design production capacity of greater than 200 tonnes per year; (v) seafood processing - commercially processing seafood, including removing the scales, gills, intestines or shells, filleting, chilling, freezing or packaging seafood in works with a design production capacity of greater than 100 tonnes per year; (vi) smoking, drying or curing works - smoking, drying or curing meat, fish or other edible products by applying heat, smoke or other dehydration method in works, other than when conducted on limited basis in premises separately defined as a shop located in a centre, with a design production capacity of greater than 200 tonnes a year; (vii) flour milling - commercial processing of grain crops by crushing, grinding, milling separating or sizing in works having a design production capacity of greater than 1000 tonnes; (viii) pet, stock, aquaculture food manufacture - commercially manufacturing or processing pet, stock or aquaculture food, other than an abattoir, slaughter house, rendering works or animal glue or gelatine works, in works with a design production capacity of greater than 200 tonnes a year; (ix) poultry meat processing - slaughtering poultry for commercially produced meat or meat products for human consumption, or processing, other than smoking, or packaging of poultry meat or poultry meat products for human consumption; (x) sugar milling or refining - crushing sugar cane or manufacturing sugar or sugar cane products from sugar cane;

Use	Definition
	(e) wooden product manufacturing - (i) wooden product manufacturing - commercially manufacturing or fabricating a wooden product, including for example the manufacture of chipboard, laminated board and wood veneer products and manufacturing secondary wooden products, in works producing greater than 2500 tonnes and less than 5000 tonnes per year; (ii) chemically treating timber - commercially treating timber for preservation using chemicals, including, for example copper, chromium, arsenic, borax and creosote~~;~~ (f) commercial waste management activities - (i) waste disposal - operating a facility for - a. disposing of general waste or limited regulated waste; b. disposing or regulated waste; c. disposing of untreated clinical waste; d. disposal of waste by incinerating - operating a waste incineration facility for incinerating vegetation, clean paper and cardboard, general waste, clinical waste or regulated waste; (ii) recycling or reprocessing regulated waste - operating a facility for the recycling or reprocessing of regulated waste to produce a saleable product, excluding battery or tyre recycling; (iii) regulated waste - operating a facility for the receiving and storing of regulated waste, excluding battery or tyre recycling; (g) miscellaneous activities - (i) plastic manufacturing - commercially manufacturing plastic or plastic products, including fibreglass products, in works producing greater than 5 tonnes per year; (ii) plaster manufacturing - manufacturing or processing plaster in works producing greater than 200 tonnes per year; (iii) rendering operation - commercially processing or extracting substances including, for example, fat, tallow, derivatives of fat or tallow or proteinaceous matter, from animal wastes or by products; (iv) soil conditioner manufacturing - commercially manufacturing soil conditioners by receiving, blending, storing, processing, drying or composting organic material or organic waste, including for example, animal manures, sewage, septic sludges and domestic waste; (v) tanning - commercially operating a tannery or works for curing animal skins or hides, or commercially finishing leather; (vi) textile manufacturing - commercial carpet manufacturing, wool scouring or carbonising, cotton milling, or textile bleaching, dyeing or finishing;
High Impact Industry	Means the use of any premises for a large, high impact industrial activity which is similar to those activities set out below and ancillary activities that support the industrial use such as administration offices or sales and display areas for products manufactured, assembled or finished on the site (a) chemical, coal and petroleum products activities - (i) alcohol distillation - commercially distilling alcohol in works producing greater than 2,500 litres per year; (ii) chemical manufacturing, processing or mixing - manufacturing or processing an inorganic chemical, organic chemical or chemical product, or mixing inorganic chemicals, organic chemicals or chemical products, other than mixing non combustible or non flammable chemicals or chemical products by dilution with water, in a plant or works producing greater

Use	Definition
	than 200 tonnes per year; (iii) paint manufacture - manufacturing paint in works producing greater than 10,000 litres per year; (iv) petroleum products - storing over 100,000 litres of petroleum products in tanks or containers, other than at service stations; (v) oil refining or processing - refining or processing crude oil or shale oil; (vi) gas production - refinement or processing: commercially producing, refining or processing gas by any method, including the reforming of hydrocarbon gas; (vii) fuel gas refining or processing - refining or processing of fuel gas; (b) electricity and fuel burning activities - (i) power station; (ii) coke production - producing, quenching, cutting, crushing or grading coke; (c) fabricated metal product activities - (i) metal works - commercially smelting or processing ores or ore concentrates to produce metal in works; (ii) mineral processing - commercially processing, classification, mixing or concentration of mineral ores to produce mineral concentrates; (d) non metallic mineral product manufacturing - (i) clay or ceramic products manufacture - manufacturing clay or ceramic products, including bricks, tiles, pipes, pottery goods, artwork and refractories, in works producing greater than 100 tonnes per year; (ii) manufacturing facility producing any of the following - a. tyres; b. asbestos products; c. asphalt; d. cement; e. glass or glass fibre for large scale commercial distribution; f. mineral wool or ceramic fibre for large scale commercial distribution; (e) food processing - (i) meat processing other than poultry meat processing - slaughtering animals for commercially produced meat or meat products for human consumption, or processing, other than smoking, or packaging of meat or meat products for human consumption, including abattoirs and knackeries; (f) wooden product manufacturing- (i) wooden product manufacturing - commercially manufacturing or fabricating a wooden product, including for example the manufacture of chipboard, laminated board and wood veneer products and manufacturing secondary wooden products, producing in works greater than 5000 tonnes per year; (ii) sawmilling or woodchipping - sawing, cutting, chipping, compressing, milling or machining logs, drying logs in a kiln or manufacturing secondary wooden products, in a mill or works producing greater than 500 tonnes per year; (g) commercial waste management activities – (i) chemical or oil recycling - operating a facility for receiving and commercially recycling or reprocessing used chemicals, oils or solvents to produce saleable products;

Use	Definition
	(ii) drum reconditioning - operating a facility for receiving and commercially reconditioning metal or plastic drums; (h) miscellaneous activities - (i) battery manufacturing - manufacturing batteries of any kind; (ii) crushing milling or grinding - processing products including for example, uncured rubber and chemicals, by crushing or grinding or milling; (iii) pulp or paper manufacturing; (iv) tobacco processing - processing tobacco or manufacturing products from tobacco or a tobacco derivative. The term includes any use defined as a large dangerous goods location or major hazard facility[9.3].
Home Business	Means the use of premises for a business activity located either within a dwelling unit, an extension to a dwelling unit, or outside of a dwelling unit but on the same premises.
Hospital	Means the use of premises for medical or psychiatric care and the treatment and residence of patients. The term includes ancillary facilities such as administrative offices, canteens and kitchens.
Hotel	Means the use of premises for the sale of liquor. The term includes - (a) hotels, taverns, licensed clubs and wine bars; (b) ancillary facilities such as short term accommodation, betting agency outlet and dining/entertainment activities.
Indoor Recreation Facility	Means the use of premises for playing of a game, recreation, athletics, sport and entertainment where these activities take place primarily in a building. The term includes theatres, cinemas, amusement centres, function and convention centres, sport and fitness centres and gyms.
Institution	Means the use of premises as a penal institution, a reformatory, a prison or any other institution for the reform or training of persons committed by a Court.
Intensive Agriculture	Means the use of premises for intensive agricultural production that has specific treatment, management, infrastructure or built form requirements. The term includes - (a) livestock enterprises such as piggeries, feedlots, poultry farms, aquaculture or the like; (b) horticultural enterprises such as hydroponic or greenhouse production.
Landscape Supply Depot	Means a premises used for the bulk storage and sale of landscaping materials including, ornamentation, furniture or structures for gardens, plants and propagative material suitable for use in gardening or landscaping.
Marine Services	Means the use of premises for any coastal dependent activity on land adjoining Moreton Bay or that part of a waterway subject to tidal influence. The term includes premises used for the launching, berthing, storage, fuelling, servicing and repairing of boats.

Use	Definition
Minor Utility	Means the use of premises by or on behalf of an entity authorised under law to undertake the provision or maintenance of infrastructure associated with - (a) collection, treatment, storage, transmission or distribution of water, sewerage, waste, electricity, gas or communications services; (b) facilities required to mitigate hazards from flood waters or to collect, store, dispose or enhance water quality of stormwater; (c) movement networks including road, rail, air, water, pedestrian or cycle and associated controls and facilities, such as bus shelters, signage, traffic lights and the like; where these activities are limited to the following - (a) general - (i) works below the surface of the ground of a road reserve, such as a conduit or pipe installation; or (ii) the installation or maintenance of plant or equipment inside an existing building or structure of an existing facility or service; or (iii) the construction or use of any building or structure having a gross floor area of less than $50m^2$ and a height less than 5 metres; or (iv) the use of land less than $1000m^2$ in area; or (b) for electricity purposes - (i) the installation or erection of an electricity distribution or supply network, and any components of such a network, which operates at voltages less than 33 kilovolts, such as poles and lines; or (ii) the installation or erection of a new or replacement electrical transmission line on land on which such a line has already been erected and which is identified as a future line for the electricity provider; or (c) for gas purposes - (i) the installation of a gas supply system, including tanks, on private land in order to serve a use on that premises; (ii) does not involve generators or similar to infuse air into the liquid gas; or (d) for communication purposes - (i) "low impact facilities" as defined by the Telecommunications Act 1997, Telecommunications (Low Impact Facilities) Determination 1997 and Amendment No. 1 of 1999.
Mobile Home Park	Means the use of premises for permanent and long-term residential accommodation such as caravans or mobile homes that also have on-site management. The term includes ancillary facilities such as communal and recreational facilities.
Multiple Dwelling	Means the use of premises for three or more dwelling units on a lot, where each dwelling unit has a separate entrance. The term includes townhouses, villas and terrace housing.
Night Club	Means the use of premises for listening and/or dancing by the general public to live or recorded music, predominantly during night hours. The term includes the ancillary sale of liquor for consumption on the premises.
Outdoor Dining	Means the use of public land in association with premises where food or drink is consumed. This term includes any furniture, shade devices, bollards, planter boxes, or any other streetscape fixtures used for the purpose of outdoor dining.

Use	Definition
Outdoor Recreation Facility	Means the use of premises either publicly or privately owned, for playing of a game, recreation, instruction, athletics, sport and entertainment where these activities take place primarily outdoors whether they are used for the purpose of gain or not. The term includes - (a) sporting fields, athletics tracks, race tracks, equestrian uses, swimming pools, golf courses, driving ranges and tennis courts, but excludes private tennis courts; (b) ancillary facilities including a clubhouse, whether licensed or not.
Park	Means the use of premises to which the public has rights of access free of charge for recreation and enjoyment. The term includes ornamental gardens, environmental or scenic reserves, any infrequent use for a sport or form of athletics conducted on an informal basis, picnic areas and children's play areas.
Passenger Terminal	Means the use of premises as a bus, rail or coach station or water transport passenger terminal.
Place of Worship	Means a premises used for a church, chapel, mosque, temple, synagogue or similar place of worship. This term includes ancillary facilities such as religious training, accommodation, social, welfare and recreational facilities.
Produce Store	Means the use of premises for the display and retail sale of goods which are normally used in carrying out agriculture or intensive agriculture. This term includes in combination, animal fodder, chemical fertilisers for primary production, seeds, bulk veterinary supplies and farm clothing.
Refreshment Establishment	Means the use of premises for a cafe, fast food outlet, milk bar, refreshment kiosk, restaurant, snack bar, take-away food premises, tea garden, tea room or uses of a like nature. The term includes ancillary activities that involve entertainment or the consumption of liquor.
Relatives Apartment	Means the use of premises for a dwelling unit by a relative where associated with a dwelling house.
Retail Warehouse	Means the use of premises for the display, retail sale or hire of goods, where the gross floor area of the use is no less than 400m^2. The term includes, but is not limited to, the sale of liquor, clothing, footwear and sporting goods.
Road	Means as in accordance with the *Transport Infrastructure Act 1994* - (a) an area of land dedicated to public use as a road; or (b) an area that is open to or used by the public and is developed for, or has as one of its main uses, the driving or riding of motor vehicles; or (c) a bridge, culvert, ferry, ford, tunnel or viaduct; or (d) a pedestrian or bicycle path; or (e) any part of a bridge, culvert, ferry, ford, tunnel, viaduct or path mentioned in (a)-(d).
Roadside Stall	Means the use of premises for the display and retail sale of agricultural products grown on the premises or on nearby sites, and where the area of the use is not greater than 40m^2 gross floor area.
Rural Enterprise	Means the use of premises for the handling, treating, packing and distribution of unprocessed agricultural products, whether or not they are grown or produced on the premises, which does not include retail sale.

Use	Definition
Service Industry	Means the use of premises for a small scale, low impact industrial activity which is intended to provide industry services to the general public or is similar to those activities set out below and ancillary activities that support the industrial use such as administration offices or sales and display areas for products manufactured, assembled or finished on the site - (a) making of the following - (i) artificial flowers; (ii) bread, cakes and pastry; (iii) dental prostheses; (iv) fashion accessories; (v) garments; (vi) jewellery; (vii) optical goods, being spectacles and the like; (viii) soft furnishings; (ix) toys; (b) assembling the following from components manufactured elsewhere - (i) aids and appliances for people with a disability; (ii) audio-visual equipment; (iii) barbeques; (iv) blinds; (v) furniture; (vi) portable domestic electrical appliances; (vii) domestic light fittings and accessories; (viii) scientific instruments; (ix) sports equipment, other than ammunition, vehicles and water craft; (x) television and video equipment; (c) repairing and servicing the following - (i) blinds; (ii) cameras or other photographic equipment; (iii) canvas goods, tents and camping soft goods; (iv) computers and computer equipment; (v) electronic instruments and equipment; (vi) garments; (vii) mowers, including motor mowers and portable gardening equipment; (viii) optical goods, being spectacles and the like; (ix) domestic electrical appliances; (x) power and other tools; (xi) scientific instruments; (d) providing the following services - (i) book binding; (ii) document duplicating or copying or photocopying; (iii) engraving by hand; (iv) laboratory facilities; (v) locksmith services; (vi) photographic film processing; (vii) picture framing; (viii) plan printing; (ix) restoration of small articles of a personal or domestic nature or works of art; (x) studio facilities for film, theatre or television. The term does not include any use defined as a dangerous goods location, large dangerous goods location or major hazard facility.[9.3]

Use	Definition
Service Station	Means the use of premises primarily for refueling motor vehicles. The term includes the ancillary use of premises for one or more of the following - (a) the retail sale to the travelling public of - (i) fuels, lubricants, oils and grease; (ii) spare parts and auto accessories; (iii) a range of convenience items; (b) the carrying out of - (i) maintenance, service and repair of motor vehicles; (ii) hire of a limited number of vehicles and trailers; (iii) cleaning of motor vehicles including facilities provided to the public to clean their own vehicles; (c) car wash.
Shop	Means the use of premises for the purpose of displaying or offering goods or personal services for retail sale or hire. The term includes supermarkets, chemists, newsagent, boutiques or the like and the incidental storage of such goods on the same premises.
Small Lot House	Means the use of premises for a dwelling unit on a lot with an area less than 500m^2 or with a frontage of equal to of less than 10 meters.
Telecommunications Facility	Means the use of premises for the installation of any equipment or infrastructure used to receive and transmit telecommunications that is constructed by a carrier licensed by the Commonwealth Government. This term includes cables, telephones, freestanding towers, poles, dishes, antennae and equipment shelters. The term does not include 'Low Impact Facilities' as defined by the *Telecommunications Act 1997*, *Telecommunications (Low Impact Facilities) Determination 1997* and *Amendment No.1 of 1999*.
Temporary Use	Means the irregular or infrequent use of premises for sport, recreation, entertainment or cultural activities that does not require the construction of a permanent building or the installation of permanent infrastructure or services. A temporary use does not exceed 21 days in any 12 month period with not one single period exceeding 10 days duration.
Tourist Accommodation	Means the use of premises for short-term accommodation for tourists. The term includes self-contained motel, serviced apartments, guesthouse, backpackers hostel and resort.
Tourist Park	Means the use of premises for holiday and recreational purposes, involving the setting up of short-term and easily removable accommodation for travelers or holiday cabin. The term includes ancillary communal, management and recreational facilities.
Utility Installation	Means the use of premises for any of the following - (a) a public facility that collects, stores and treats water, wastewater, sewage or other solid or liquid waste; such as a sewerage treatment plant, water reservoir, water treatment plant, waste management facility or the like; or (b) a facility that commercially generates electricity using energy derived from water, wind or sun; or (c) a facility that distributes energy derived from electricity, gas, oil or the like; such as an electrical substation, gas storage facility or the like; or (d) a public or commercial facility for the broadcasting of television or other medium, such as radio; or

Use	Definition
	(e) a movement network and associated facilities for transport by rail or air. This term includes maintenance and storage depots used in conjunction with the use.
Vehicle Depot	Means the use of premises for the storage, for commercial or public purposes, of more than one motor vehicle, including taxis, buses, trucks and uses of a like nature. The term includes the ancillary servicing, repair and cleaning of vehicles stored on premises.
Vehicle Parking Station	Means the use of premises for the parking of vehicles where the parking is not ancillary to some other use on the same premises.
Vehicle Repair Premises	Means the use of premises for the carrying out, either with or without servicing, of repairs to motor vehicles, including motor vehicle components such as radiators and windscreens, farm machinery or boats. The term includes panel beating, spray painting and car detailing.
Veterinary Surgery	Means the use of premises for the veterinary care, surgery and treatment of animals whether or not provision is made for the accommodation of animals on the premises.
Warehouse	Means the use of premises for the storage of goods, merchandise or materials in a building or buildings not associated with another use on the premises. The term includes a self-storage facility and freight depot.

this page purposely
left blank

Division 2 - Administrative Terms

Note -

Index for Administrative Terms

Administrative Terms

- Acceptable Solution
- Access
- Access Permeability
- Accessway
- Acid Sulfate Soils
- Act
- Advertising Device
- All Weather Road Access
- Alternative Provision
- Annual Exceedance Probability (AEP)
- Aquaculture
- Articulation
- Assessable Development
- Assessment Criteria
- Asset Protection Zone
- Australian Height Datum (AHD)
- Average Recurrence Interval (ARI)
- Average Width
- Background Noise Level
- Basement
- Biodiversity
- Building
- Building Format Plan
- Building Frontage
- Building Height
- Building Work
- Burra Charter
- Bushfire
- Bushfire Risk
- Bushland Habitat Map
- Carrier
- Circulation Aisles
- Circulation Roads
- Code Assessable
- Commercial Place
- Commercial Waste
- Communications Structures
- Community Infrastructure
- Community Management Statement
- Community Titles Scheme
- Commuter Path
- Connectivity
- Curtilage
- Declared Plant
- Demolition
- Design Production Capacity
- Design Speed
- Design Vehicle
- Development
- Development Envelope Area
- Domestic Additions
- Domestic Outbuilding
- Domestic Waste
- Drainage Constrained Land

Administrative Terms – continued

- Driveway Crossover
- Dwelling Unit
- Ecologic Niche
- Ecological Sustainability
- Electricity Easement Electricity Infrastructure
- Environmental Impact Statement
- Environmental Management Plan
- Environmental Nuisance
- Environmental Relevant Activity
- Environmental Values
- Environmental Weed
- Erosion Prone Area
- Excavation and Fill
- Exempt Development
- Façade
- Flood
- Flood Prone Area
- Footpath
- Frontage
- Gross Floor Area (GFA)
- Gross Leasable Area
- Ground Level
- Habitable Room
- Habitat
- Habitat Link
- Habitat Values
- Hazardous Materials in Bulk
- Heritage Place
- Highest Astronomical Tide
- IDAS
- Impact Assessable
- Infill Development
- Internal Lot
- Irregular Lot
- Koala Habitat Trees
- Land Application System
- Landscaping
- Legibility
- Level of Assessment
- Local Access Path
- Lot
- Low Impact Facility
- Low-Rise Building
- Major Reconfiguration
- Material Change of Use
- Mean High Water Spring Tide
- Medium Reconfiguration
- Mid-Rise Building
- Mezzanine
- Minor Building Work
- Minor Heritage Building Work
- Minor Reconfiguration
- Mixed Use

Schedule 3 - Administrative Terms

Administrative Terms - continued

- Movement Network
- Native Animals
- Native Plants
- Natural Drainage Lines
- Nature Based Recreation
- Neighbourhood Density
- Net Residential Density
- On-site Raising or Relocation
- Operational Work
- Other Development
- Out-of-Centre
- Overall Outcomes
- Overland Flow Path
- Overlay
- Parking Aisles
- Permeable Surface
- Plan Area
- Planning Scheme Area
- Planning Scheme Policy
- Plot Ratio
- Premises
- Primary Active Frontage
- Private Open Space
- Private Swimming Pool
- Private Tennis Court
- Private Waterfront Structure
- Probable Solutions
- Queuing Area
- Rainwater Harvesting
- Reconfiguring a Lot
- Recreational Path
- Recyclable Waste
- Removable Structure
- Riparian Vegetation
- Risk
- Road Hierarchy
- Road Reserve
- Scenic Values
- Schedules
- Secondary Active Frontage
- Self-Assessable Development
- Sensitive Receiving Environment
- Service Aisles
- Service Bay
- Service Vehicle
- Setback
- Short Term Accommodation
- Significant Centre Development
- Silviculture
- Site
- Site Analysis Plan
- Site Coverage
- Site Density
- Site Development Plan
- Specific Outcome
- Standard Format Plan
- State-controlled Road
- Storey
- Storm Tide Area
- Stormwater
- Stormwater Management Plan (SMP)

Administrative Terms - continued

- Streetscape
- Structure
- Structure Plan
- Sub-area
- Substantially Completed
- Swale
- Table Drain
- Tables of Assessment
- Tidal Land
- Use
- Utility Infrastructure
- Verge
- Volumetric Format Plan
- Walkable Catchment
- Waste Container
- Wastewater System
- Water Catchment
- Waterway
- Wetland
- Zone
- Zone and Overlay Maps
- Zone of Influence

Administrative Term	Definition
Acceptable Solution	Means precise criteria that do not require the exercise of discretion to assess whether a proposed development complies.
Access	Means the entry of persons and vehicles onto a lot, either existing or proposed, from a road which abuts the frontage of that lot.
Access Permeability	Means development that is accessible by a number of alternative paths but does not surround itself with or include barriers to movement.
Accessway	Means a vehicle driveway used to access premises.
Acid Sulfate Soils (ASS)	Means soil or sediment containing highly acidic horizons or layers affected by the oxidation of iron sulfides, known as actual ASS, and/or soil or sediment containing iron sulfides or other sulfidic material that has not been exposed to air and oxidised, known as potential ASS.
Act	Means the *Integrated Planning Act 1997*, as amended from time to time.
Advertising Device	Means a structure or device that is visible from a road or other public place used for the display of advertisements. This term includes any framework, noticeboard, signboard and any wall, fence or other structure used for such purposes. This term does not include a Temporary Advertisement regulated by Local Law 11 such as banner signs, footway signs, inflatable signs, official traffic signs, signs placed by the local government or signs authorised under the *Transport Infrastructure Act 1994*.
All Weather Road Access	Means public road access to boundary of the subject land by a vehicular carriageway of sufficient standard, in terms of width, surface, gradient and structural capacity, to allow for the safe passage of conventional two wheel drive vehicles and safe trafficability during storm runoff.
Alternative Provision	Means provisions that are – (a) identified or stated in a planning scheme; (b) alternative to the provisions of QDC, Part 11 or 12; (c) qualitative statements or quantifiable standards.
Annual Exceedance Probability (AEP)	Means the likelihood of occurrence of a flood of a given size or larger in any one year, usually expressed as a percentage. For example, if a peak flood discharge of 500 cubic metres per second has an AEP of 5 percent, it means that there is a 5 percent risk, that is the probability of 0.05 or a likelihood of 1 in 20, of a peak flood discharge of 500 cubic metres /second or larger occurring in any one year. The AEP of a flood event gives no indication of when a flood of that size will occur next.
Aquaculture	Has the meaning in the *Fisheries Act 1994* and includes the cultivation of live fisheries resources for sale other than in circumstances prescribed under a regulation.
Articulation	Means the treatment of a building form or façade that creates or contributes to visual character and an active frontage. Articulation may include - (a) vertical and horizontal detail and/or projections; (b) variations in colours, materials, patterns and textures; (c) architectural elements such as openings, entry statements, directional signage, exposure of fittings, distinction between levels of a building, awnings, planters, balconies and stepping of built form.

Schedule 3 - Administrative Terms

Administrative Term	Definition
Assessable Development	Has the meaning given to it in the *Integrated Planning Act 1997.*
Assessment Criteria	Means those parts of the assessment provisions, comprising codes or otherwise, that establish the outcomes sought for self-assessable and assessable development, including overall and specific outcomes, acceptable solutions and probable solutions.
Asset Protection Zone	Means an area surrounding development intended to reduce bushfire risk to an acceptable level. The width of the asset protection zone will vary with slope and aspect and consists of a fuel reduced and fuel free area.
Australian Height Datum (AHD)	Means the survey height datum adopted by the National Mapping Council as the datum to which all vertical control for mapping is to be referred. **Note -** 0.0 metres AHD approximates mean sea level.
Average Recurrence Interval (ARI)	Means the average period between the recurrence of a storm event of a given rainfall intensity. The ARI represents a statistical probability. **Note -** For example, a 100 year ARI indicates an average of 100 years between exceedance of a given storm magnitude.
Average Width	Means, in regard to a lot, the distance between the midpoints of the side boundaries of the lot.
Background Noise Level	Means for a specified time interval, in relation to an investigation of a noise, the A-weighted sound pressure level that is equalled or exceeded for 90 percent of that part of the interval in which the investigated noise is absent.
Basement	Means a storey either below ground level or that projects no more than one metre above finished ground level.
Biodiversity	Means the natural diversity of wildlife, together with the environmental conditions necessary for their survival. The four levels of biodiversity are genetic, species, ecosystem and regional diversity.
Building	Has the meaning given by the *Building Act 1975*.
Building Format Plan	Has the meaning given by the *Land Titles Act 1994*.
Building Frontage	Means the facade of a building that fronts the street or other public spaces.
Building Height	Means the vertical distance from ground level to the highest point of the building and structures.
Building Work	Has the meaning given to it in the *Integrated Planning Act 1997*.
Burra Charter	Means the charter that provides guidance for the conservation and management of places of cultural significance and is based on the knowledge and experience of Australia ICOMOS members (ICOMOS - International Council on Monuments and Sites).
Bushfire	Means an uncontrolled fire burning in forest, scrub or grassland vegetation, also referred to as a wildfire.

Administrative Term	Definition
Bushfire Risk	Means the chance of a bushfire igniting, spreading and causing damage to assets of value to the community. Assets include life, property such as buildings, stock, crops and forests, and the City's natural and cultural heritage.
Bushland Habitat Map	For the purposes of section 24(b) of Local Law o. 6 - Protection of Vegetation, the Enhancement Area, Enhancement Link, Enhancement Corridor, Koala Habitat, Bushland Habitat and Marine Habitat depicted on the Bushland Habitat Overlay Map is the land described in section 24(b) as land which is or may be required for Greenspace indicated in a Development Control Plan, Local Area Plan or Strategic Plan.
Carrier	Means the holder of a carrier licence granted by the Australian Communications Authority (ACA).
Circulation Aisles	Means aisles performing the dual function of providing access to car parking spaces and providing access to other aisles.
Circulation Roads	Means roadways contained within a development site that do not provide direct access to carparking spaces, but distribute traffic between entrance/exit driveways, circulation aisles and service areas.
Code Assessable	Has the meaning given to it in the *Integrated Planning Act 1997*.
Commercial Place	Means for the purpose of noise assessments any commercial, industrial or business premises, not being a sensitive receiving environment.
Commercial Waste	Has the meaning given to it in the *Environmental Protection (interim Waste) Regulation 1996*.
Communications Structures	Means the installation on an existing building or structure of any device used to receive or transmit telecommunications through the air, where the device is ancillary to the use of the premises. This includes satellite dishes, aerials and antennae. The term does not include the installation of "low impact facilities" as defined by the *Telecommunications Act 1997*, *Telecommunications (Low Impact Facilities) Determination 1997* and *Amendment No.1 of 1999*. **Note -** Where the device is the use of the premises, it is a Telecommunications Facility.
Community Infrastructure	Has the meaning given to it in the *Integrated Planning Act 1997*.
Community Management Statement	Has the meaning given to it in the *Body Corporate and Community Management Act 1997*.
Community Titles Scheme	Has the meaning given to it in the *Body Corporate and Community Management Act 1997*.
Commuter Path	Means a path primarily intended to accommodate trips to work or school and provides for safe longer distance travel at higher speeds between destinations for both cyclists and pedestrians.
Connectivity	Means the number and quality of connections in the movement network that make it easy or difficult to move around a place.
Curtilage	Means the area of a site associated with and adjoining a building or other structure. When applied to a dwelling unit, it comprises the area of land within the site used and maintained in conjunction with the dwelling unit.

Administrative Term	Definition
Declared Plant	Means a plant declared under the *Rural Lands Protection Act 1985* or Local Law No. 13 - Control of Pests.
Demolition	Means the complete or substantial demolition, of more than 20 percent of existing site cover, of an existing structure.
Design Production Capacity	Means the maximum output capable of being produced given the plant, equipment, personnel and facilities on the site.
Design Speed	Means the speed selected as being appropriate for a street, for design purposes.
Design Vehicle	Means the vehicle for which a given development is designed to accommodate in relation to on-site access and maneuverability.
Development	Has the meaning given to it in the *Integrated Planning Act 1997*.
Development Envelope Area	Means a line drawn on a plan of a lot to define the limits for the siting of any buildings/structures on that lot. This term includes all other areas of disturbance such as manoeuvrability and car parking, storage, on-site wastewater treatment and associated clearing of vegetation. **Note -** Development envelopes, previously described as 'building envelopes', are approved by the local government as - ■ a condition of development on an approved plan of subdivision; or ■ being identified as land outside a statutory covenant area on the property title. In both instances a property search will identify the existence of an approved development (building) envelope.
Domestic Additions	Means the addition to or extension of the dwelling unit for - (a) rooms - (i) on premises with an existing dwelling house or small lot house; (ii) that are enclosed and roofed additions to the existing dwelling unit; (iii) that do not form an additional dwelling unit; or (b) provision of the mandatory covered car accommodation, which can be attached or detached to the dwelling unit; or (c) buildings or structures used for passive recreational purposes that are - (i) roofed and unenclosed such as verandahs, decks, patios or the like; (ii) or provide roof-top recreational areas.
Domestic Outbuilding	Means a Class 10a building as defined in the *Building Code of Australia 1996* that is ancillary to a residential use on the same premises and is limited to non-habitable buildings for the purpose of a shed, garage and carport.
Domestic Waste	Has the meaning given to it in the *Environmental Protection (interim Waste) Regulation 1996*.
Drainage Constrained Land	Means land on the Southern Moreton Bay Islands that is likely to be constrained by drainage issues, such as overland flow path, high water table, seepage and all weather road access.
Driveway Crossover	Means a vehicle driveway extending from the roadway to the property boundary.

Administrative Term	Definition
Dwelling Unit	Means a building or part of a building used, or capable of being used, as a self-contained residence that includes a food preparation area or an area capable of being adapted for food preparation, a bath or shower, a toilet and wash basin. It includes activities ancillary to a dwelling unit.
Ecologic Niche	Means the way a species interacts with all the components or resources of its habitat. The term includes not only the habitat occupied by an organism but also the organism's functional role as a member of the community of indigenous plants and animals.
Ecological Sustainability	Has the meaning given to it in the *Integrated Planning Act 1997*.
Electricity Easement	Means a right held by an electricity distribution provider over a lot or portion of a lot owned by another party. The right may include the ability to access, maintain, repair, rebuild and restrict development in the electricity easement.
Electricity Infrastructure	Means a building or structure used for electricity distribution.
Environmental Impact Statement	Means a document which may be required to be prepared to support a development application for development approval and which includes, in sufficient detail to allow an adequate assessment of the potential environmental impacts and the suitability of proposed mitigation measures, the following - (a) a description of the development proposal; (b) a description of the existing environment and its values and significance; (c) a statement of the likely impacts of the proposal on the existing environment; (d) a statement of the measures to be used to avoid or mitigate adverse impacts; (e) a statement of the means to be used to monitor the effectiveness of the mitigation measures and to respond to accidents, emergencies and other non-conformances. This term commonly includes an environmental management plan.
Environmental Management Plan	Means a document which may be required to be prepared to support a development application, or as a condition of development approval, which describes, for the design, construction and operation of the premises and for emergency situations - (a) what acceptable levels of environmental impact are intended to be achieved or maintained; (b) how it is proposed to avoid or minimise risks of serious or material environmental harm or nuisance; (c) who is responsible for implementing the management measures; (d) what monitoring, reporting and reviews will be undertaken; (e) when actions will be taken.
Environmental Nuisance	Has the meaning given to it in the *Environmental Protection Act 1994*.
Environmentally Relevant Activity	Has the meaning given to it in Schedule 1 of the *Environmental Protection Regulation 1998*.

Administrative Term	Definition
Environmental Values	Means all of the components of a natural environment that maintain biodiversity and ecosystem processes and create opportunities for individual survival, population survival and the capacity for species to continue their evolutionary adaption, including - (a) native vegetation and native animals, their habitat, habitat values and habitat links; (b) the ecologic niche of native vegetation and native animals, that are the very specific areas in which they live and have important relationships with the physical environment, other native vegetation and native animals; (c) the behaviour of native vegetation and native animals, that is the responses of an animal to its environment, responses that are not random, but are highly organised and intricate patterns of activity, including a native animal's movement patterns through the landscape.
Environmental Weed	Means a plant which is not declared under the *Rural Lands Protection Act 1985* or *Local Law No. 13 Control of Pests*, however due to its impact on the environment, particularly bushland/native fauna, is considered by the local government to be a weed.
Erosion Prone Area	Has the meaning given to it in the *Coastal Protection and Management Act 1995*.
Excavation and Fill	Means the disturbing, including the adding, of soil, that is - (a) building work outside the scope of the *Building Regulation 2006*; or (b) operational work. The term does not include the disturbing or adding of soil, such as top dressing, of less than 300mm.
Exempt Development	Has the meaning given to it in the *Integrated Planning Act 1997*.
Façade	Means the front of a building and more particularly its principal front.
Flood	Means the temporary inundation of land by expanses of water that overtop the natural or artificial banks of a waterway such as a stream, creek, river, estuary, lake or dam.
Flood Prone Area	Means an area that indicatively identifies the 1 percent Annual Exceedance Probability (AEP) flood event as shown on the Flood Prone, Storm Tide and Drainage Constrained Overlay where development is restricted.
Footpath	Means a pavement intended only for pedestrians, separate from the road or street carriageway, either within or outside a road reserve.
Frontage	Means a boundary of a lot which abuts a road.

Administrative Term	Definition
Gross Floor Area (GFA)	Means the total floor area of all storeys of a building or buildings, inclusive of walls, columns and balconies, whether roofed or not, measured from the outside of external walls or the centre of common walls. The term excludes the following - (a) building services; (b) a ground floor public lobby; (c) a public mall in a shopping complex; (d) areas at or below ground level, or below a constructed roof level not greater than 1 metre above ground level, associated with the parking, loading and maneuvering of motor vehicles; (e) private balconies whether roofed or not; (f) accessible open decks; (g) public toilets.
Gross Leasable Area	Means the total floor area, inclusive of all walls and columns, capable of being occupied by separate tenants for their exclusive use, including basements, mezzanine and toilets.
Ground Level	Means the level of the natural ground or where the level of the natural ground has been changed, the level as lawfully changed.
Habitable Room	Has the meaning given to it in the *Building Code of Australia 1996*.
Habitat	Means the place where an organism lives, a physical area, some specific part of the earth's surface, air, soil, water, or another organism. More than one animal may live in a particular habitat.
Habitat Link	Means the area that connects two or more areas of habitat and provides a relatively safe area for movement and refuge for indigenous animals. At first sight a habitat link may appear to have no visible habitat values but it may serve as, for example, a place through which indigenous animals move from one place to another.
Habitat Values	Means those characteristics of an area that make it suitable as a habitat or refuge for indigenous plants and animals. These characteristics include the physical structure, nutrient and energy flows, condition and extent of habitat and the location of the area in relation to other habitats.
Hazardous Materials in Bulk	Means hazardous materials as defined in the *Dangerous Goods Safety Management Act 2001* in quantities that - (a) would be equivalent to or exceed the minimum quantities set out to determine a large Dangerous Goods Location in the *Dangerous Goods Safety Management Regulation*; or (b) would require a licence for the storage of an explosive under the *Explosives Regulation 1955*. The term does not include radioactive substances or infectious substances.
Heritage Place	Means a site, structure, building or thing of European, indigenous or cultural heritage significance identified in Schedule 4 - Heritage Place Register of the planning scheme.
Highest Astronomical Tide	Means the highest tide level that can be predicted to occur under average meteorological conditions and any combination of astronomical conditions. This level will not be reached every year, and is less than extreme levels that can be caused by storm tides.
IDAS	Has the meaning given to it in the *Integrated Planning Act 1997*.
Impact Assessable	Has the meaning given to it in the *Integrated Planning Act 1997*.

Administrative Term	Definition
Infill Development	Means development in existing areas usually involving the use of vacant land or the replacement or removal of existing uses to allow for new uses.
Internal Lot	Means a freehold lot that has access to a street only by means of an access way or easement, where the lot is not part of a community title scheme.
Irregular Lot	Means a lot that is not rectangular in shape. This term does not include an internal lot.
Koala Habitat Tree	Has the meaning given to it in the *South East Queensland Regional Plan 2005 - 2026 - Interim Guidelines: Koalas and Development*
Land Application System	Means the system used to apply effluent from a wastewater treatment unit into or onto the soil for further in-soil treatment and absorption.
Landscaping	Means the treatment of land for the purpose of enhancing or protecting the amenity of a site and the locality in which it is situated.
Legibility	Means the design of the movement network to provide a sense of direction and connection, giving clear signals regarding the spatial layout and geography of the area. A legible place is one in which people can instinctively orientate themselves, move around and locate different parts of a place.
Level of Assessment	Means the type of assessment identified for development in accordance with the IPA, including one or other of the following - (a) exempt; (b) self-assessable; (c) assessable requiring code assessment, referred to as code assessable; (d) assessable requiring impact assessment, referred to as impact assessable.
Local Access Path	Means a path used by both pedestrians and cyclists that provides safe connectivity within a local community to individual properties.
Lot	Has the meaning given to it in the *Integrated Planning Act 1997*.
Low Impact Facility	Has the meaning given to it in the *Telecommunications Act 1997*.
Low-Rise Building	Means a building that is 1 to 2 storeys in height.
Major Reconfiguration	Means any standard format reconfiguration that - (a) creates or has the potential to create more than 5 non-residential lots; (b) creates more than 50 residential lot or 75 dwelling unit (or their equivalent); or (c) creates a new road, public or private, that is an Access Street or higher order in the Movement Network.
Material Change of Use	Has the meaning given to it in the *Integrated Planning Act 1997*.
Mean High Water Spring Tide	Means the long term average of the heights of two successive high tides when the range of tide is greatest, at full moon and new moon.
Medium Reconfiguration	Means any standard format reconfiguration other than a major or minor reconfiguration.
Mid-Rise Building	Means a building that is 3 to 5 storeys in height.

Administrative Term	Definition
Mezzanine	Means an intermediate floor within a room or storey that only partially extends over the floor below and is accessed internally from the dwelling unit.
Minor Building Work	Means building work - (a) identified as exempt or self-assessable development in accordance with Schedule 1 of the *Building Regulation 2006*; or (b) in the following zones - (i) any Centre Zone, Commercial Industry Zone, General Industry Zone, Island Industry Zone or Marine Activity Zone, where - a. the gross floor area does not increase by more than 20 percent of the existing gross floor area or 50m^2, whichever is the lesser; or b. an additional storey is not created; or (c) for the installation of 'low impact facilities' as defined by the *Telecommunications Act 1997*, *Telecommunications (Low Impact Facilities) Determination 1997* and *Amendment No.1 of 1999*. This term does not include alterations to, demolition of or additions to an item listed in Schedule 4 - Heritage Place Register.
Minor Heritage Building Work	Means building work that - (a) is internal; or (b) is at the rear of the building, where it is not visible from a public place; or (c) will not substantially change the external appearance of the place, such as sun hoods, awnings, stairs and ramps.
Minor Reconfiguration	Means standard format reconfiguration that does not create a road, public or private, or require a road to be constructed, widened or altered.
Mixed Use	Means a use of premises that integrates residential activities and tourist accommodation with commercial, retail or industry activities where a minimum of 30 percent of the total gross floor area is used for residential purposes.
Movement Network	Means all road, pedestrian and cycleway corridors.
Native Animals	Means animal species that existed in the Redland City area prior to the year 1600AD.
Native Plants	Means plant species that existed in the Redland City area prior to the year 1600AD and occurred within a historic natural range within parts of the City. This term also includes indigenous plants which are known as locally native plants.
Natural Drainage Line	Means - (a) for the purposes of the planning scheme, natural drainage lines which are identified on the Waterways, Wetlands and Moreton Bay Overlay Map; or (b) a natural or modified tributary of a waterway.
Nature Based Recreation	Means - (a) activities that include appreciation of nature as the key motivational factor; (b) substantial modification of the natural environment is not required; (c) the natural environment is critical to the participation and satisfaction of the participants; (d) activities that occur in, and are dependent upon settings which are perceived by those pursuing recreation as not being significantly altered by recent human activity; (e) activities that occur in, and are dependent upon, settings which are not under the direct control of participants.

Administrative Term	Definition
Neighbourhood Density	Means the ratio of the number of dwelling units to the area of the land. The area includes internal public streets, all areas of public open space, local or neighbourhood shops, primary and secondary schools, local community services, local employment areas and half the width of adjoining arterial roads.
Net Residential Density	Means the ratio of the number of dwelling units to the area of land they occupy (including internal public streets) plus half the width of adjoining access roads that provide vehicular access to dwelling units.
On-site Raising or Relocation	Means - (a) raising a dwelling unit that already exists on the premises; or (b) relocating a dwelling unit that already exists on a lot to another location on the same lot.
Operational Work	Has the meaning given to it in the *Integrated Planning Act 1997*.
Other Development	Means development other than a material change of use of premises and is confined to - (a) reconfiguration for - (i) creating lots by subdividing another lot by standard format plan; (ii) creating lots by subdividing another lot by - a. building format plan; or b. volumetric format plan; (iii) rearranging the boundaries of a lot; (iv) dividing land into parts by agreement; (v) creating an easement for access; (b) building work for - (i) communications structures; (ii) a domestic addition; (iii) a domestic outbuilding; (iv) on-site raising or relocation of an existing dwelling unit; (v) a private swimming pool; (vi) a private tennis court; (vii) addition or external alteration of a building other than a domestic building; (c) operational works for - (i) constructing a domestic driveway crossover; (ii) excavation and fill; (iii) operational work for reconfiguring a lot (by standard format plan); (iv) placing an advertising device on premises; (v) private waterfront structure.
Out-of-Centre	Means a location that is clearly separate from a centre but within the defined urban area in the planning scheme.
Overall Outcomes	Means statements of desired outcomes that apply to the whole of a zone or overlay, or are the purpose of a code under s3.5.13(2) of the *Integrated Planning Act 1997*, or both.
Overland Flow Path	Means - (a) an area which is vertically exposed to the sky, created or set aside in conjunction with a proposed development, specifically over which concentrated stormwater flows in excess of those carried by the minor drainage system, if applicable, are conveyed; or (b) a natural depression over which concentrated stormwater, including natural wide shallow sheet flow, discharges to a downstream location.

Administrative Term	Definition
Overlay	Means specific provisions based on areas, places or sites having special attributes that affect the outcomes sought, as the attributes may - (a) make those areas, places or sites sensitive to effects of development; or (b) constrain development due to an environmental hazard or the value of a resource.
Parking Aisles	Means the aisles used by vehicles to gain access to a carparking space.
Permeable Surface	Means the treatment of a surface to allow rainwater to infiltrate to the soil, such as grass, gravel, landscaping or open paving.
Plan Area	Means the vertical projection of all unenclosed structures at ground level and includes patios, decks, swimming pools, and associated paving and the like.
Planning Scheme Area	Means - (a) the most seaward extent of a cadastral boundary; or (b) to mean high spring tide.
Planning Scheme Policy	Has the meaning given to it in the *Integrated Planning Act 1997.*
Plot Ratio	Means the ratio of the gross floor area of a building or buildings on a site to the total area of the site.
Premises	Has the meaning given to it in the *Integrated Planning Act 1997*.
Primary Active Frontage	Means a building frontage that provides maximum interaction with the street through the provision of uses and tenancies which support high levels of pedestrian movement and activity. These uses are to be concentrated where possible on the ground and lower floors of a building with direct visual contact with the street. A primary frontage is one that - (a) applies an appropriate combination of architectural design elements including windows, openings, surface articulation, entry statements, balconies, and awnings; (b) uses an appropriate combination of external finishes and colours to provide visual interest and unify the centre's streetscape; (c) maximises opportunities for casual surveillance and interaction between different user groups; (d) accommodates a mix of activities along the street frontage which contribute to pedestrian use over an extended period.
Private Open Space	Means an outdoor area of a dwelling unit for the exclusive use of the dwelling unit.
Private Swimming Pool	Has the meaning given to it in the *Building Code of Australia 1996* and - (a) is located on the same premises as a dwelling unit; (b) is for the exclusive use of the residents and their visitors; (c) the use of the swimming pool is strictly ancillary to the residential use of the site.
Private Tennis Court	Means a single tennis court that is - (a) located on the same premises as a dwelling unit or units; (b) for the exclusive use of the residents and their visitors; (c) is strictly ancillary to the residential use of the site.

Schedule 3 - Administrative Terms

Administrative Term	Definition
Private Waterfront Structure	Means any structure used for a boat ramp, slipway, jetty, pontoon or the like which - (a) is located on the same premises as a dwelling unit; (b) is for the exclusive use of the residents and their visitors; (c) is intended to provide access for people, goods, vessels or vehicles in, on, over, through or across tidal lands or water; (d) is strictly ancillary to the residential use of the site. The term does not apply to artificial waterways, such as canals, as defined under the *Coastal Protection and Management Act 1995*.
Probable Solutions	Means the criteria or standards that provide a guide for achieving a specific outcome in whole or part, but do not necessarily establish compliance with a code.
Queuing Area	Means an area of roadway between the entry or exit driveway and the first conflict point or traffic control point within a car parking area, available for the storage of vehicles in a queue.
Rainwater Harvesting	Means the process of capturing and storing roof run-off for reuse.
Reconfiguring a Lot	Has the meaning given to it in the *Integrated Planning Act 1997*.
Recreational Path	Means a path that provides for recreational use and commuter use and includes support facilities such as toilets, seating, drinking fountains and shelter.
Recyclable Waste	Has the meaning given to it in the *Environmental Protection (interim Waste) Regulation 1996*.
Removable Structure	Means a dwelling unit, building or structure including foundations, capable of being completely removed from site.
Riparian Vegetation	Means vegetation that grows on, below or adjacent to waterways.
Risk	Means a concept used to describe the likelihood of harmful consequences arising from the interaction of hazards, community and the environment.
Road Hierarchy	Means the capacity and type of roads throughout the City.
Road Reserve	Means the land dedicated to the Crown for the purpose of a road or street, and incorporating the full width from property boundary to property boundary.
Scenic Values	Means elements valued by the community as being an important to the landscape and visual quality of the local government area. These elements include bushland, ridgelines, open and semi-open rural landscapes, coastal landscapes, water views and skylines.
Schedules	Means details that support the assessment categories or assessment criteria, or provide other information for their interpretation, such as the meaning of defined uses or other term used in the scheme.

Administrative Term	Definition
Secondary Active Frontage	Means a building frontage that provides a minor but supporting role in stimulating pedestrian movement and activity. Uses and tenancies on these frontages will be concentrated at ground floor and offer some limited visual contact with the street. A secondary active frontage is one that - (a) where possible, applies an appropriate combination of architectural design elements including windows, openings, balconies and awnings; (b) sensitively uses an appropriate combination of external finishes and colours to provide visual interest and unify the centre's streetscape; (c) creates some opportunities for casual surveillance and interface between different user groups.
Self-Assessable Development	Has the meaning given to it in the *Integrated Planning Act 1997.*
Sensitive Receiving Environment	Means a dwelling house, small lot house, dual occupancy, multiple dwelling, apartment building, tourist accommodation, mobile home park, relatives apartment, aged persons and special needs housing, child care centre, education facility, community facility, hospital or health care centre.
Service Aisles	Means the proportion of roadway between the access driveway and the service area. Service aisles may form part of the internal circulating road system.
Service Bay	Means a parking bay for service vehicles engaged in loading or unloading and where a loading dock may or may not be provided.
Service Vehicle	Means a vehicle used to supply or remove goods or services to or from a development.
Setback	Means the minimum distance from any lot boundary to the outermost projection of a building.
Short-Term Accommodation	Means the provision of temporary accommodation for tourists or travellers for a maximum period of eight weeks.
Significant Centre Development	Means centre development with a gross floor area over 4000m^2, whether or not in stages.
Silviculture	Means the practice of managing stands of trees by manipulation of all biological aspects of growing trees, to enhance growth and timber quality. Examples of silvicultural practices include planting, thinning, form pruning, harvesting, tending of weeds, fertilizing and spraying.
Site	Means a lot or lots or part thereof which is the subject of a development application.
Site Analysis Plan	Means a plan that demonstrates an appreciation of a site and its context to identify opportunities and constraints for site layout and design.

Administrative Term	Definition
Site Coverage	Means the proportion of the total site area expressed as a percentage to the area that is covered by buildings measured within the projection of the outer limits of the buildings onto a horizontal plane. This term also includes - (a) balconies that extend more than 2.5 metres out from the wall of the building; (b) balconies that have the ability to be enclosed by blinds, shutters, moveable panels or other architectural design features; (c) outbuildings. The term does not include - (a) any structure or part thereof included in a landscaped open space area such as a gazebo or shade structure; (b) roof overhangs or sun hoods, or parts thereof which do not extend more than 2.5 metres out from the wall of a building; (c) private balconies which are accessible only from one dwelling unit and where any part of the balcony is not more than 2.5 metres out from the wall of the building; (d) building linkages which in total have a combined area of less than 5 percent of the lot area; (e) basement car parking areas.
Site Density	Means the ratio of dwellings to the area of the site occupied by the dwellings.
Site Development Plan	Means a diagram that identifies the location and extent of all development proposed on a site. This includes all buildings and structures, setbacks, open space, on-site parking and access, all associated facilities, landscaping, preliminary stormwater drainage design, floor plans, building elevations showing colours and finishes of building materials, cross-sections showing the relationship to existing and proposed topography that shows all excavation and fill.
Specific Outcome	Means statements of desired outcomes that contribute to the achievement of overall outcomes and may relate to the use of land, the provision of infrastructure or specified effects of use or development on aspects of the environment. Development that achieves the specific outcomes of a code complies with the code.
Standard Format Plan	Has the meaning given by the *Land Titles Act 1994*.
State-controlled Road	Means, in accordance with the *Transport Infrastructure Act 1994*, a road or land, or part of a road or land, declared to be a State-controlled road.
Storey	Means that part of a building between floor levels. If there is no floor above, it is the part between the floor level and the ceiling. Any storey that has an internal height of more than 5.2 metres shall be regarded as two (2) storeys and the number of storeys shall not include any storey, which is below ground level in its entirety.
Storm Tide Area	Means an area below 2.4 metres Australian Height Datum (AHD) that indicatively identifies the 1 percent Annual Exceedance Probability (AEP) storm tide event as shown on the Flood Prone, Storm Tide and Drainage Constrained Overlay where development may be restricted.
Stormwater	Means run-off from rainfall events.
Stormwater Management Plan	Means a plan for the management of stormwater quantity and quality prepared for a waterway.

Administrative Term	Definition
Streetscape	Means the visible components within and along a street, or a part of a street, between facing buildings. This term includes the form of buildings, setbacks, fencing, landscaping, driveway and street surfaces, utility infrastructure and street furniture such as lighting, signs, barriers and bus shelters.
Structure	Has the meaning given to it by the *Building Act 1975*.
Structure Plan	Means a plan that provides a comprehensive planning approach to the reconfiguration of land where the road and pedestrian/cyclist network, open space network, infrastructure, environmental issues, mix of land uses and density yields, integration with external sites among other attributes are identified.
Sub-area	Means an identified area within a zone with special attributes to which certain zone provisions apply.
Substantially Completed	Means in relation to a building or structure the completion of the floor and the erection of the frame and roof and in relation to landscaping its completion to a useable standard.
Swale	Means a shallow constructed channel, often grass-lined, which is used as an alternative to kerb and channel, or as a pretreatment to other measures.
Table Drain	Means the side drain of a road adjacent to the shoulders, having its invert lower than the subgrade level and being part of the formation.
Tables of Assessment	Means a table that identifies the assessment categories applying to development in a particular zone or overlay.
Tidal Land	Means reefs shoals and other land permanently or periodically submerged by waters subject to tidal influence.
Use	Has the meaning given to it in the *Integrated Planning Act 1997.*
Utility Infrastructure	Means the following types of infrastructure - (a) water reticulation or supply; (b) energy supply; (c) telecommunications; (d) a sewerage system; (e) stormwater drainage; (f) road; (g) another system or service designed to improve the amenity, or enhance the enjoyment, of premises or other land.
Verge	Means that part of the street or road reserve between the carriageway and the boundary of the adjacent lot or other limit to the road reserve. The term may accommodate service provider utility infrastructure, footpaths, stormwater flows, street lighting poles and planting.
Volumetric Format Plan	Has the meaning given by the *Land Titles Act 1994*.
Walkable Catchment	Means the actual area within 5-minute, 400 metres to 10-minute, 800 metres, walking distance along a movement system.
Waste Container	Has the meaning given by 'Standard Commercial Waste Container' and 'Standard Domestic Waste Container' as defined under the *Environmental Protection (Interim Waste) Regulation 1996*.

Administrative Term	Definition
Wastewater System	Means an on-site domestic, commercial or industrial wastewater system that receives, treats and absorbs wastewater within the property boundaries of the site of generation of the wastewater.
Water Catchment	Means an area that drains water to a common point.
Waterway	Means for the purpose of the planning scheme, wetlands, major waterways, minor waterways and the Tingalpa Reservoir identified on the Waterways, Wetlands and Moreton Bay Overlay. This term includes watercourses as defined in the *Water Act 2000*.
Wetland	Means an area - (a) of permanent or periodic inundation, whether natural or artificial, static or flowing, fresh, brackish or saline; (b) includes an area of marine water, the depth of which at low tide is less than 6 metres.
Zone	Means an identified geographical area that is based on land use allocations.
Zone and Overlay Maps	Means maps that - (a) for zones - identify zone(s) and if applicable sub-areas that affect the premises; (b) for an overlay - identify overlay(s) that affect the lot.
Zone of Influence	Means the area under the ground, which is deemed to be loaded by the footings of the building, structure or special structure.

Note -

Summary of commonly used terms from the *Integrated Planning Act 1997* and other legislation.

Term	Terms Defined in Legislation
Assessable Development	Means - (a) development specified in schedule 8, part 1 of the *Integrated Planning Act 1997*; or (b) for a planning scheme area - development that is not specified in schedule 8, part 1 but is declared under the planning scheme for the area to be assessable development.
Brothel	Means premises made available for prostitution by 2 or more prostitutes at the premises.
Building	Means a fixed structure that is wholly or partly enclosed by walls and is roofed, and includes a floating building and any part of a building.
Building Format Plan	Means a plan of survey that defines land using the structural elements of a building, including, for example, floors, walls and ceilings.
Building Work	Means - (a) building, repairing, altering, underpinning (whether by vertical or lateral support), moving or demolishing a building or other structure; or (b) work regulated under the *Standard Building Regulation 1993*; or (c) excavating or filling - (i) for, or incidental to, the activities mentioned in paragraph (a); or (ii) that may adversely affect the stability of a building or other structure, whether on the land on which the building or other structure is situated or on adjoining land; or (d) supporting (whether vertically or laterally) land for activities mentioned in paragraph (a). "Building work", for administrating IDAS under the *Queensland Heritage Act 1992*, includes any of the following - (a) painting or plastering that substantially alters the appearance of the place; or (b) renovation, alterations or additions to the place; or (c) excavations, disturbances or changes to landscape or natural features of land that substantially alters the appearance of the place; or (d) work on furniture, fittings and other objects - (i) associated with the place; (ii) that contributes to the place's cultural heritage significance. "Building work", for administering IDAS under the *Queensland Heritage Act 1992*, does not include development for which an exemption certificate has been issued under that Act.
Code Assessment	Means the assessment of development by the assessment manager only against the common material and applicable codes (other than codes, or parts of codes, a concurrence agency is required to assess an application against).

Term	Terms Defined in Legislation
Commercial Waste	Means waste (other than garden waste, recyclable waste, interceptor waste or waste discharged to a sewer) resulting from the use or occupation of any premises, or part thereof, being – (a) a hotel, morel, caravan park, café, food store, canteen or like premises; or (b) an assembly building, institutional building, school, kindergarten or child minding centre; or (c) premises where any spectator sport or any game is played; or (d) an exhibition ground, showground, racecourse, or like premises; or (e) any office, shop or other premises whatsoever, where there is carried on any business or work, other than a manufacturing procsss.
Community Infrastructure	Means community infrastructure stated in Schedule 5 of the *Integrated Planning Act 1997*.
Community Management Statement	Means a document that - (a) identifies land; (b) otherwise complies with the requirements of the *Body Corporate and Community Management Act 1997* for a community management statement.
Community Titles Scheme	Means - (a) a single community management statement recorded by the registrar identifying land (the "scheme land"); (b) the scheme land.
Development	Means any of the following - (a) carrying out building work; or (b) carrying out plumbing or drainage work; or (c) carrying out operational work; or (d) reconfiguring a lot; or (e) making a material change of use of premises.
Domestic Waste	Means waste (other than domestic clean-up waste, garden waste, recyclable waste, interceptor waste or waste discharged into a sewer) resulting from the ordinary domestic use or occupation of any premises or any part thereof, being - (a) a single or private dwelling; or (b) premises containing 2 or more flats, apartments or other dwelling units, each used as a separate domicile; or (c) a boarding house, hostel, lodging house, or guest house.
Ecological Sustainability	Means a balance that integrates - (a) protection of ecological processes and natural systems at local, regional, State and wider levels; (b) economic development; (c) maintenance of the cultural, economic, physical and social wellbeing of people and communities.
Environmental Nuisance	Means unreasonable interference or likely interference with an environmental value caused by - (a) noise, dust, odour, light; or (b) an unhealthy, offensive or unsightly condition because of contamination; or (c) another way prescribed by regulation.
Erosion Prone Area	Means an area declared to be an erosion prone area under section 70(1) of the *Coastal Protection and Management Act 1995*.
Exempt Development	Means development other than assessable or self-assessable development.

Term	Terms Defined in Legislation
Habitable Room	Means a room used for normal domestic activities, and - (a) includes a bedroom, living room, lounge room, music room, television room, kitchen, dining room, sewing room, study, playroom, family room and sunroom; but (b) excludes a bathroom, laundry, water closet, pantry, walk-in-wardrobe, corridor, hallway, lobby, photographic darkroom, clothes-drying room, and other spaces of a specialised nature occupied neither frequently nor for extended periods.
IDAS	Means the system detailed in Chapter 3 of the *Integrated Planning Act 1997* for integrating State and local government assessment and approval processes for development.
Impact Assessment	Means the assessment (other than code assessment) of - (a) the environmental effects of proposed development; (b) the ways of dealing with the effects.
Koala Habitat Trees	Means native vegetation and plants greater than 4 metres in height or with a diameter greater than 10 centimetres at 1.3 metres above the ground and includes non-eucalypt species that grow in association with the species used by koalas.
Lot	Means - (a) a lot under the *Land Title Act 1994*; or (b) a separate, distinct parcel of land for which an interest is recorded in a register under the *Land Act 1994*; or (c) common property for a community titles scheme under the *Body Corporate and Community Management Act 1997*; or (d) a lot or common property to which the *Building Units and Group Titles Act 1980* continues to apply; or (e) a community or precinct thoroughfare under the *Mixed Use Development Act 1993*; or (f) a primary or secondary thoroughfare under the *Integrated Resort Development Act 1987* or the *Sanctuary Cove Resort Act 1985*.
Material Change of Use	Means - (a) the start of a new use of the premises; or (b) the re-establishment on the premises of a use that has been abandoned; or (c) a material change in the intensity or scale of the use of the premises.
Operational Work	Means - (a) extracting gravel, rock, sand or soil from the place where it occurs naturally; or (b) conducting a forest practice; or (c) excavating or filling that materially affects premises or their use; or (d) placing an advertising device on premises; or (e) undertaking work (other than destroying or removing vegetation not on freehold land) in, on, over or under premises that materially affects premises or their use; or (f) clearing vegetation on freehold land; or (g) operations of any kind and all things constructed or installed that allow taking, or interfering with, water (other than using a water truck to pump water) under the *Water Act 2000*; but does not include building, drainage or plumbing work.

Schedule 3 - Administrative Terms

Term	Terms Defined in Legislation
Planning Scheme Policy	Means an instrument that - (a) supports the local dimensions of a planning scheme; (b) supports local government actions under the *Integrated Planning Act 1997* for IDAS and for making or amending its planning scheme; (c) is made by a local government under Division 5 of the *Integrated Planning Act 1997.*
Premises	Means - (a) a building or other structure; or (b) land (whether or not a building or other structure is situated on the land).
Reconfiguring a Lot	Means - (a) creating lots by subdividing another lot; or (b) amalgamating 2 or more lots; or (c) rearranging the boundaries of a lot by registering a plan of subdivision; or (d) dividing land into parts by agreement (other than a lease for a term, including renewal options, not exceeding 10 years, or an agreement for the exclusive use of part of the common property for a community titles scheme under the *Body Corporate and Community Management Act 1997*) rendering different parts of a lot immediately available for separate disposition or separate occupation; or (e) creating an easement giving access to a lot from a constructed road.
Recyclable Waste	Means clean and inoffensive waste that is declared to be recyclable waste under an application for an approval granted under section 369A of the Act.
Self-assessable Development	Means - (a) development specified in schedule 8, part 2 of the *Integrated Planning Act 1997*; or (b) for a planning scheme area - development that is not specified in schedule 8, part 2 of the *Integrated Planning Act 1997* but is declared under the planning scheme for the area to be self-assessable development.
Standard Format Plan	Means a plan of survey that defines land using a horizontal plane and references to marks on the ground.
Structure	Means a wall or fence and anything fixed to or projecting from a building, wall, fence or other structure.
Use	Means, in relation to premises, any use incidental to and necessarily associated with the use of the premises.
Volumetric Format Plan	Means a plan of survey that defines land using 3 dimensionally located points to identify the position, shape and dimensions of each bounding surface.
Waste Container	**Standard Commercial Waste Container –** Means a container of such type and such construction as approved by the chief executive for the storage of commercial waste. **Standard Domestic Waste Container –** Means a weatherproof and ratproof container of such type and such construction as approved by the chief executive for the storage of domestic waste and authorized by local government for use in the area.

Note -

Summary of acronyms used in the Redlands Planning Scheme.

Acronyms	
Government Departments and Agencies	
C.S.I.R.O.	Commonwealth Scientific and Industrial Research Organisation
DLGPSR	Queensland Department of Local Government, Planning, Sport and Recreation
DMR	Queensland Department of Main Roads
DPIF	Queensland Department of Primary Industries and Fisheries
EPA	Queensland Environmental Protection Agency
NRM&E	Queensland Department of Natural Resources, Mines and Energy
Guidelines / Standards	
AR&R	Australian Rainfall and Run-off
AS	Australian Standard
AUS-SPEC	Specifications published by the AUS-SPEC joint venture
MUTCD	Manual of Uniform Traffic Control Devices
NZS	New Zealand Standard
QUDM	Queensland Urban Drainage Manual
Legislation	
BCA	*Building Code of Australia 1996*
CAMBA	Agreement between the Government of Australia and the Government of the People's Republic of China for the Protection of Migratory Birds and their Environment
DDA	*Disability Discrimination Act 1997*
IDAS	Integrated Development Assessment System
IPA	*Integrated Planning Act 1997*
JAMBA	Agreement between the Government of Australia and the Government of Japan for the Protection of Migratory Birds in Danger of Extinction and their Environment
RAMSAR	Wetlands designated as of international importance by the Ramsar Treaty
SBR	*Standard Building Regulation 1993*
Organisations	
ARRB	Australian Road Research Board
IPWEAQ	Institute of Public Works Engineering Australia Queensland
RPEQ	Registered Professional Engineer of Queensland
Other	
NSI	North Stradbroke Island
SMBI	Southern Moreton Bay Islands
Technical Terms	
AEP	Annual Exceedance Probability
AHD	Australian Height Datum
ARI	Average Recurrence Interval
CBR	California Bearing Ratio
EIS	Environmental Impact Statement
EME	Electromagnetic Emissions
ESA	Equivalent Standard Axle
ESD	Ecologically Sustainable Development
GFA	Gross Floor Area
GQAL	Good Quality Agricultural Land
GVM	Gross Vehicle Mass
HAT	Highest Astronomical Tide
RL	Relative Level
SMP	Stormwater Management Plan
VMP	Vegetation Management Plan

this page purposely
left blank

Schedule 4 - Heritage Places Register

Table 1 – Mainland

Property Name / Number / Street Address	Real Property Description	Summary Description of Item	Heritage Significance
Cleveland			
Pioneer Cemetery 11 Lisa Street	Lot 9 on C644	Landscaped park; original site of Cleveland Cemetery	Local
RSL Hall 44-76 Smith Street	Part of Lot 1 on CP864383	c.1928 large low set timber hall, gable roof, masonry entry	Local
Edgar Harley Pavilion, former Cleveland School of Arts Hall 44-76 Smith Street	Part of Lot 1 on CP864383	Community facility used for various social and cultural events, built c.1890 on Shore Street	Local
Former Cleveland Police Station 1-11 Passage Street	Part of Lot 10 on CP664	Low set symmetrical timber frame, hip and gable roofs c.1936	State
Cleveland War Memorial 0/33 Shore Street	Lot 9 on SP144574	c.1925 stone war memorial; Lauder	Local
St Paul's Anglican Church 76 Shore Street East	Lot 1 on RP159272	c.1874 small brick church; Gothic style; spire	State
GJ Walter Park 240 Middle Street East	Lot 66 on SP115554	Recreation reserve; promenade of pine trees near foreshore	Local
Grand View Hotel 49-51 North Street	Part of Lot 11 on RP154679	Two storey masonry hotel c.1840	State
Banyan Tree 45, 47 & 49-51 North Street	Part of Lot 6 and 7 on C14561 and Lot 11 RP154679	Massive, mature banyan tree growing between property and road reserve	Local
Cassim's Hotel (Former Cleveland Hotel) 109A Shore Street North	Lot 6 on RP884286	Single storey/two storey masonry hotel	State
Former Cleveland Lighthouse Cleveland Point	Road Reserve (Adjacent to Lot 391 on SL10999)	Timber framed hexagonal tower, narrow walkway to upper level; moved to new site	State
Street Tree 204 Middle Street	Road Reserve Near (Lot 10 on RP234061)	Large street tree near doctor's residence	Local
Ye Olde Court House Restaurant 149 Shore Street North	Lot 501 on C14568	Courthouse Restaurant; c.1853 painted brick; boat-like profile to verandah balustrade	State
"Fernleigh" 71-75 Shore Street East	Lot 14-16 on C14563	Low set timber frame residence on timber stumps	State
Norfolk Island pine trees 127 Shore Street North	Part of Lot 0 on BUP103110	Norfolk Island pine trees	State
Cleveland Central Cemetery 53-71 Wellington Street	Lot 1 on SP185725	Cleveland district's earliest non-indigenous settler families are interred; since c. 1874	Local
Cleveland Rifle Range 31 & 37 Weippin Street	Lot 37 on C145614 and Part of Lot 84 on SL12329	Formed in 1914 under the Defence Act; partly cleared bushland with a track to the site of the target mounds	Local
Ormiston			
St Andrews Anglican Church 209-213 Wellington Street	Lot 2 on RP1705	Small timber church, steep pitched gable roof	State
Empire Point Foreshore 11-13 Empire Vista	Lot 999 on RP863217	Remnants of timber jetty; extensive trees	Local
Old Bridge Hilliards Creek, 56 Hilliard Street	Lot 7 on RP807476	Remnants of timber bridge	Local
Ormiston House 277-295 Wellington Street	Part of Lot 2 on RP176653	Residential estate; listed National Trust	State
Wellington Point			
Wellington Point Reserve 2A Main Road	Lot 199 on SL8594	Land reserve; panoramic views; mature trees	Local

Schedule 4 - Heritage Places Register

Property Name / Number / Street Address	Real Property Description	Summary Description of Item	Heritage Significance
"Whepstead House" 563 Main Road	Part of Lot 2 on SP192348 and Part of Lot 0 on SP152511	Elegant 2½ storey timber frame villa and tree	State
Birkdale			
School of Arts Hall 101 Birkdale Road	Lot 130 on SL319	c.1930s high set double gable, later addition	Local
Victoria Point			
"Monkani" 11 Point O'Halloran Road	Lot 1 on RP14821	Girl Guide Hall, timber frame gable roof	Local
Redland Bay			
Foreshore, 46-72 Banana Street	Lot 167 on CP884275	Roll of Honour	Local
Moreton Bay Figs On Esplanade, corner of Moores Road	Road Reserve Opposite Lot 21 on RP46884	Moreton Bay figs	Local
Building 189 School of Arts Road	Lot 1 on SP165089	Cropped pyramid roof, exposed timber framing	Local
Cemetery 398-408 Serpentine Creek Road	Lot 260 on SL11166	Graves of many pioneering residents	State
Redland Bay School 125-141 Gordon Road	Lot 434 on SL8044	Raised timber frame school building	State
North Redland Bay Cemetery 19-27 Gordon Road	Part of Lot 2 on RP209904	Burials from 1908; headstones made of white marble, sandstone, or granite, with concrete, sandstone or metal grave surrounds	Local
Thornlands			
Thornlands Hall Dance Palais 87-95 Redland Bay Road	Part of Lot 1 on RP138577	Community Hall; built in 1938	Local
Capalaba			
The Rocks Crossing Tingalpa Creek	Part of Lot 83 on SL5432 and adjoining he creek bed	Creek crossing; remnants of the roadway "cobblestones" (c. 1850) and bridge foundations 1874	Local

Table 2 – North Stradbroke Island

Property Name / Number / Street Address	Real Property Description	Summary Description of Item	Heritage Significance
Dunwich			
Dunwich Cemetery Bingle Road	Lot 107 on SP170152	c. 10,000 burials, largely of inmates of the Benevolent Asylum	State
Convict Causeway Junner Street	Lot 88 on CP815722	1827 military post and stores depot; services the Benevolent Asylum (1864-1947)	State
Privy Pit and site of Convict Barracks and Store Ballow Road	Lot 12 on CP865858	1828; Magazine at Dunwich, military and prisoner barracks	State
St Marks Anglican Church Ballow Road	Lot 13 on D9044	Church built for Dunwich Benevolent asylum inmates	State
Dunwich Mess Hall/Public Hall Ballow Road	Lot 2 on D9048	Dunwich Public Hall, formerly mess hall for Dunwich Benevolent Asylum	State
North Stradbroke Island Lazaret Cemetery 32 Ballow Road	Part of Lot 152 on SP104035	Only known visible evidence of one of Queensland's first lazarets; c. 1850	Local
Moongalba Aboriginal Cemetery (formerly Myora) East Coast Road, North of Dunwich	Lot 171 of SL12421	c. 50 graves; headstones – wooden stone, coral and shell markers; operated alongside Moongalba/Myora Aboriginal Mission from 1892	Local
NSI Historical Museum Welsby Street	Lot 704 and 705 on D9044	Three buildings in the museum complex; herdsman's hut, replica foul ward, early stand mining residence	Local
Benevolent Institution Water Pump, Yerrol Creek East Coast Road	Lot 89 on SL5124	Public hall, formerly mess hall for Dunwich Benevolent Asylum	Local
Dunwich Learning Centre Building Mitchell Crescent	Part of Lot 128 on SL12274	Erected during World War II for patients at Brisbane's Diamantia Hospital as Dunwich Benevolent Asylum was considered safer. Never used for this purpose	Local
Junner Street South Park Junner Street	Lot 3 on CP865498	Contains structures associated with Benevolent Asylum; roadway, trees, draughts board, foundations of Victoria Hall and toilet block	Local
Water Tanks Rainbow Crescent	Part or Lot 89 on SL5124, Part of Lot 9 on USL20273	Dating from Benevolent Days	Local
Point Lookout			
-Point Lookout Foreshore -Point Lookout Well Site -Cylinder Beach Hut Base	Lot 148 on SP153119, Lot 48 on SL12352, Lot 132 on CP826165, Lot 170 on SL12240 and Lot 73 on CP 826165, and the coastline between Lot 73 on CP 826165 and Lot 48 on SL 12352, parish of Stradbroke, County of Stanley.	Point Lookout Foreshore area between Main Beach and Cylinder Beach including - -Point Lookout Well Site associated with 19th century pastoral lease - Cylinder Beach Hut Base - remnant structure associated with construction of Point Lookout Lighthouse and other local industries	State
Point Lookout Lighthouse	Lot 6 SL1335	Lighthouse built in 1932	Local
Bill North Cattle Dip East Coast Road, adjoining Dickson Way	Part of Lot 130 on SL13002	Cattle dip associated with 19th century pastoral lease over the island	Local
Point Lookout Norfolk Pines Moongalba Road and Midjimberry Road	Road Reserve Near Lot 421 on PL8544, Lot 415 on PL85424, Lot 310 on PL8544	Three of the seven Norfolk Pines planted by the Progress Association members 1940s-50s to beautify Point Lookout	Local

Property Name / Number / Street Address	Real Property Description	Summary Description of Item	Heritage Significance
Amity Point			
Amity Point Public Hall 16 Ballow Street	Lot 1 on A33911	Former Benevolent Asylum building converted into hall early 1950s by community labour.	Local

Table 3 –Southern Moreton Bay Islands

Property Name / Number / Street Address	Real Property Description	Summary Description of Item	Heritage Significance
Russell Island			
'Jacksonville' 107-123 Jackson Road	Jackson's Oval Lot 37 on SL5485	Precinct (1920s)	Local
St Peter's Parish Hall 25-27 High Street	Lot 1 on RP31200	Religion (1920s)	Local
Mrs Fischer's Grave 24 Cannes Avenue	Lot 76 on RP130935	Grave (1943)	Local
'Corduroy Road' Between Titania Terrace and Weedmore Road	On road reserve	Transport – thin log sleepers	Local
Macleay Island			
Campbell's salt works (Industrial Ruins) 1-5 High Central Road	Lot 279 on RP31201	Agriculture/ Industry (1866)	State
Tim Shea's wetland and waterhole 57-59 Charles Terrace	Lot 188 on RP133301	Public utility (1865)	Local
Campbell's Wharf end Wharf Street, Thompson's Point		Marine structure/convict campsite/Aboriginal campsite	Local
Corroboree Point (Lions Park) 7-9 Corroboree Place	Part of Lot 19 on SP168884	Aboriginal midden / fishing	Local
Lamb Island			
Pioneer Hall 109-123 Lucas Drive	Lot A on SP117019 in Lot 15 on RP31222	Community Hall (1924)	State
Jetty Shed Road Reserve at end of Lucas Drive	Near Lot 1 on RP121713	Maritime transport (1939)	Local
Thomas Lucas's Grave At the end of Lucas Drive	Near Lot 1 on RP121713	Former convict grave (1895)	Local
Mango trees Tina Avenue	On Road Reserve, adjoining Lot 83 & 84 on RP127423	Agriculture (1890); four trees planted by Acclimatisation Society	Local
Dam and melaleuca forest Lavender Street (44 Lucas Drive)	Lot 5 on RP125521	Agriculture	Local
Peel Island			
Old quarantine station, inebriates home and lazaret	Lot 100 on SL6487 and Lot 1 on AP7154	- In 1873 the island was proclaimed a reserve for quarantine purposes and remained in regular use throughout the 1870s and 1880s. - In 1907, the new lazaret, designed and organised on the principal of isolation was opened. - Remaining on the island are remnants of the Quarantine Station, the lazaret, and tracks connecting the islands main entry points to the lazaret.	State

this page purposely
left blank

Schedule 5 - Lot Sizes

Table 1 - Use Lot Size

Use	Zone	Minimum Lot Area	Minimum Lot Frontage/ Width
Dwelling House	**Urban Residential - including sub-areas UR1, UR2 and UR3**	$500m^2$	Not specified
	Medium Density Residential - excluding sub-areas MDR1, MDR2 and MDR3	$500m^2$	Not specified
	Low Density Residential	■ $2000m^2$; or ■ As existing at adoption of the planning scheme	Not specified
	Point Lookout Residential	$500m^2$	Not specified
	SMBI Residential - including sub-area SR1	$500m^2$	Not specified
	Park Residential	■ $6000m^2$; or ■ As existing at adoption of the planning scheme	Not specified
	Rural Non-Urban	■ 20 hectares; or ■ As existing at the adoption of the planning scheme	Not specified
	■ **Emerging Urban Community** ■ **Investigation** ■ **Environmental Protection** ■ **Conservation**	As existing at adoption of the planning scheme	Not specified

Schedule 5 - Lot Sizes

Use	Zone	Minimum Lot Area	Minimum Lot Frontage/ Width
Small Lot House	Urban Residential - including sub-areas UR1, UR2 and UR3	Greater than 400m^2 and less than 500m^2	10 metres
	Medium Density Residential - excluding sub-area MDR1, MDR2 and MDR3	Greater than 400m^2 and less than 500m^2	10 metres
	SMBI Residential - including sub-area SR1	Greater than 400m^2 and less than 500m^2	14 metres
	Point Lookout Residential	Greater than 400m^2 and less than 500m^2	10 metres
Dual Occupancy	Urban Residential - including sub-areas UR1 and UR2	Greater than 800m^2	20 metres
		Inconsistent	
	Medium Density Residential - excluding sub-areas MDR1, MDR2 and MDR3	Greater than 700m^2	20 metres
		Inconsistent	
	Point Lookout Residential	As existing at adoption of the planning scheme	As existing at adoption of the planning scheme
		1000m^2 being - 1 dwelling unit per 500m^2 excluding accessway	As existing at adoption of the planning scheme
Multiple Dwelling and Aged Persons and Special Needs Housing	Urban Residential - only in sub-areas UR1 and UR2	Greater than 1200m^2	25 metres
		Inconsistent	
	Medium Density Residential - including sub-areas MDR1,	Greater than 800m^2	20 metres

Use	Zone	Minimum Lot Area	Minimum Lot Frontage/ Width
	MDR2 and MDR3	Inconsistent - except in sub-area MDR1	
	Point Lookout Residential	As existing at adoption of the planning scheme	As existing at adoption of the planning scheme
		$1500m^2$ being - 1 dwelling unit per $500m^2$ excluding accessway	As existing at adoption of the planning scheme
Apartment Building	**Medium Density Residential - <u>only in</u> sub-area MDR1, MDR2 and MDR3**	Greater than $1200m^2$	25 metres
		Inconsistent - except in sub-area MDR1	
Uses other than Housing	**All Zones**	■ Lot size as required to - ▸ comply with the overall outcomes of the relevant zone code; ▸ facilitate uses proposed in these zones; ▸ comply with the relevant use code, where a specific use code exists; ▸ maintain or enhance social, economic and environmental values	

this page purposely
left blank

Schedule 5 - Lot Sizes

Schedule 6 - Movement Network and Road Design

Table 1 - Functional Characteristics of Road Types

Access Place	Access Street	Collector Road	Trunk Collector Road	Sub-Arterial Road	Arterial Road
■ Local access to property via a single cul-de-sac ■ Shared traffic, pedestrian and recreation use	■ Local access to property ■ Shared traffic, pedestrian and recreation use with local traffic access priority	■ Access to property and other roads ■ Access to local neighbour-hoods	■ Transport of people and goods within suburbs ■ District movement	■ Transport of people and goods across suburbs ■ Connect arterial roads to areas of development ■ In many instances these roads travel through centres and should facilitate pedestrian and cycle movement	■ Transport of people and goods through and around the local government area

Table 2 - Road Design (other than Industrial Roads)

Design Characteristic	Road Type					
	Access Place	Access Street	Collector Street	Trunk Collector Street	Sub-Arterial Road	Arterial Road
Maximum Traffic Volume (vehicles per day)	150	1000	3000	10,000	■ 15,000 when 2 lanes ■ 20,000 when 4 lanes	20,000 to 30,000 [1]
Maximum Traffic Catchment	15 lots	100 lots	300 lots	1000 lots	2000 lots	Not Applicable
Residential Frontage Access (RFA)	Yes	Yes	Yes	Restricted	Restricted [2]	Restricted
Design Speed	30km/h	30km/h	40km/h	50m/h	60km/h	70-80km/h
Street Leg Length (Maximum between slow points[3])	75 metres [4]	75 metres	120 metres	Not Applicable	Not Applicable	Not Applicable
Number of Lanes	2	2	2	2	2 or 4	4

Schedule 6 - Movement Network

Design Characteristic	Road Type					
	Access Place	Access Street	Collector Street	Trunk Collector Street	Sub-Arterial Road	Arterial Road
Intersection Spacing (minimum)	75 metres	■ same side of street - 60 metres; ■ opposite side of street - 40 metres.	■ same side of street - 60 metres; ■ opposite side of street - 40 metres.	■ same side of street - 100 metres; ■ opposite side of street - 60 metres.	500 metres	700 metres
Minimum Reserve Width [5]	15 metres	15 metres	18 metres	With RFA: 27 metres Without RFA: 19 metres [6]	Two lanes without RFA: 20 metres Two lanes plus bus, bike, breakdown lane with RFA: 33 metres Four lanes plus bus, bike, breakdown lane without RFA: 33 metres	Refer to the local government; or the State government if a state-controlled road
Minimum Carriageway Width	■ 6 metres in total; ■ 3 metres each lane.	■ 6 metres in total; ■ 3 metres each lane.	■ 7 metres in total; ■ 3.5 metres each lane.	With RFA: ■ 14 metres in total; ■ 3.5 metres each lane; ■ 3.5 metres bus, cycle and breakdown lane on each side. Without RFA: ■ 11 metres in total; ■ 3.5 metres each lane; ■ 2 metres bus, cycle and breakdown lane on each side.	Two lanes without RFA: ■ 12 metres in total where no RFA,; ■ 3.5 metres each lane; ■ 2.5 metres wide bus, cycle and breakdown lane on each side. Two lanes with RFA: ■ 3.5 metres each lane; ■ 6 metres central median; ■ 3.5 metres bus, cycle and breakdown lane on both sides. Four lanes without RFA: ■ 3.5 metres each lane; ■ 6 metres central median; ■ 2 metres bus, cycle and breakdown lane on both sides.	Refer to the local government; or the State government if a state-controlled road
Minimum Verge Width [7]	4 metres	4 metres	4 metres	With RFA: 6.5 metres Without RFA: 4.0 metres plus landscaping zone	Two lanes without RFA: 4 metres plus landscaping zone Two lanes with RFA: 6.5 metres Four lanes without RFA: 4.5 metres plus landscaping zone	Refer to the local government; or the State government if a state-controlled road

Design Characteristic	Road Type					
	Access Place	Access Street	Collector Street	Trunk Collector Street	Sub-Arterial Road	Arterial Road
Pedestrian Path	Not required	1.5 metres	1.5 metres	Not applicable	Not applicable	Refer to the local government; or the State government if a state-controlled road
Shared Use Path	Not required	2.0 or 2.5 metres as determined	2.0 or 2.5 metres as determined	2.5 or 3.0 metres as determined	2.5 or 3.0 metres as determined	
On-Road Cycling Facilities	No	No	No	■ On carriageway and verge; ■ Both sides; ■ Exclusive Bicycle Lane 1.5 to 2 metres [8].	■ On carriageway and verge; ■ Both sides; ■ Bicycle Lane 2 metres [8].	Refer to the local government; or the State government if a state-controlled road
Bus Route	No	No	Where appropriate	Yes	Yes	Refer to the local government; or the State government if a state-controlled road
Kerbing	Mountable kerb and channel	Mountable kerb and channel	Mountable kerb and channel	Barrier kerb and 450mm channel	Barrier kerb and 450mm channel	Refer to the local government; or the State government if a state-controlled road
Grade desirable	■ 12 percent	■ 12 percent	■ 12 percent	■ 12 percent	■ 8 percent	Refer to the local government; or the State government if a state-controlled road
Absolute maximum	■ 16 percent	■ 16 percent	■ 16 percent	■ 16 percent	■ 12 percent	

Notes -

1 For arterial roads designed to carry 30,000 to 60,000 vehicles per day refer to *Queensland Streets* page 6.4.
2 May provide access to major developments such as educational facilities, shopping centres and larger industrial sites depending on proposed access treatments.
3 Slow points reduce vehicle speeds to 40km/h or less and include t-intersections, roundabouts, bends or other traffic control devices.
4 Measured from the property boundary of the crossroad to the centre of the cul-de-sac head.
5 Measured property boundary to property boundary.
6 Plus landscaping area to be determined by the local government.
7 Measured from lip of channel to property boundary.
8 Directional signage is required if connecting to an existing network route.

Table 3 - Southern Moreton Bay Island Roads Design Characteristics

Road Description	Design Characteristics
Roads in SMBI Centre and Island Industry Zones	■ 7 metre wide bitumen carriageway with kerb and channeling; or ■ Carriageway width may be extended to 11 - 14 metres where opportunities allow for angle or parallel on-street parking.
Collector Roads	■ 6 metre wide paved carriageway, preferably with grassed swales, where servicing between 100 and 300 lots. Refer to standard drawing R-RSC-20.
Access Place and Access Street	■ 3.5 metre wide reinforced concrete carriageway, preferably with grassed swales, where servicing less than 100 lots. Refer to standard drawing R-RSC-20.

Table 4 - Industrial Roads Design Characteristics

Design Characteristics	Industrial Access Street	Industrial Collector Street
Design Speed	60km/h	60km/h
Carriageway ■ Moving lanes (two way) ■ Parking lanes ■ Total width	■ 2 x 3.5 metres ■ 2 x 2 metres to lip of channel ■ 11 metres lip to lip	■ 2 x 3.5 metres ■ 2 x 3 metres to lip of channel ■ 13 metres lip to lip
Verge Width (minimum)	4.5 metres to lip of 450mm channel	4.5 metres to lip of 450mm channel
Road Reserve Width (minimum)	20 metres	22 metres [1]
Footpath	One side	Both sides
Grade	10 percent (maximum) 0.4 percent (minimum)	8 percent (maximum) 0.4 percent (minimum)
Sight Distance (minimum)	**Refer to Queensland Streets Section 9.10**	
Carriageway Crossfall	3 percent (maximum) 2.5 percent (minimum)	3 percent (maximum) 2.5 percent (minimum)

Note -

[1] A larger road reserve may be required in certain instances as referenced in *Queensland Streets.*

Map 1 - Mainland - Movement Network

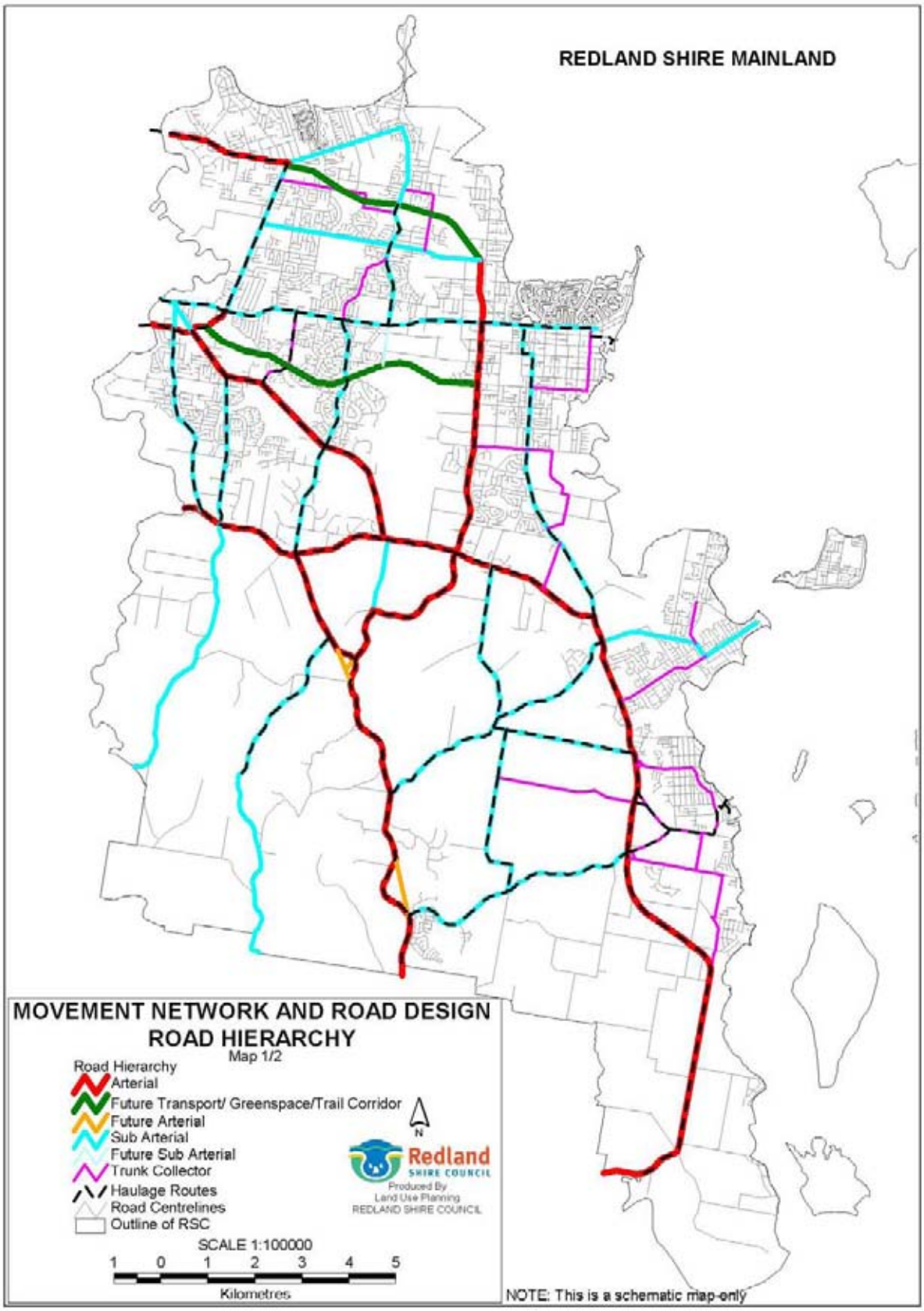

Schedule 6 - Movement Network

Map 2 - Islands - Movement Network

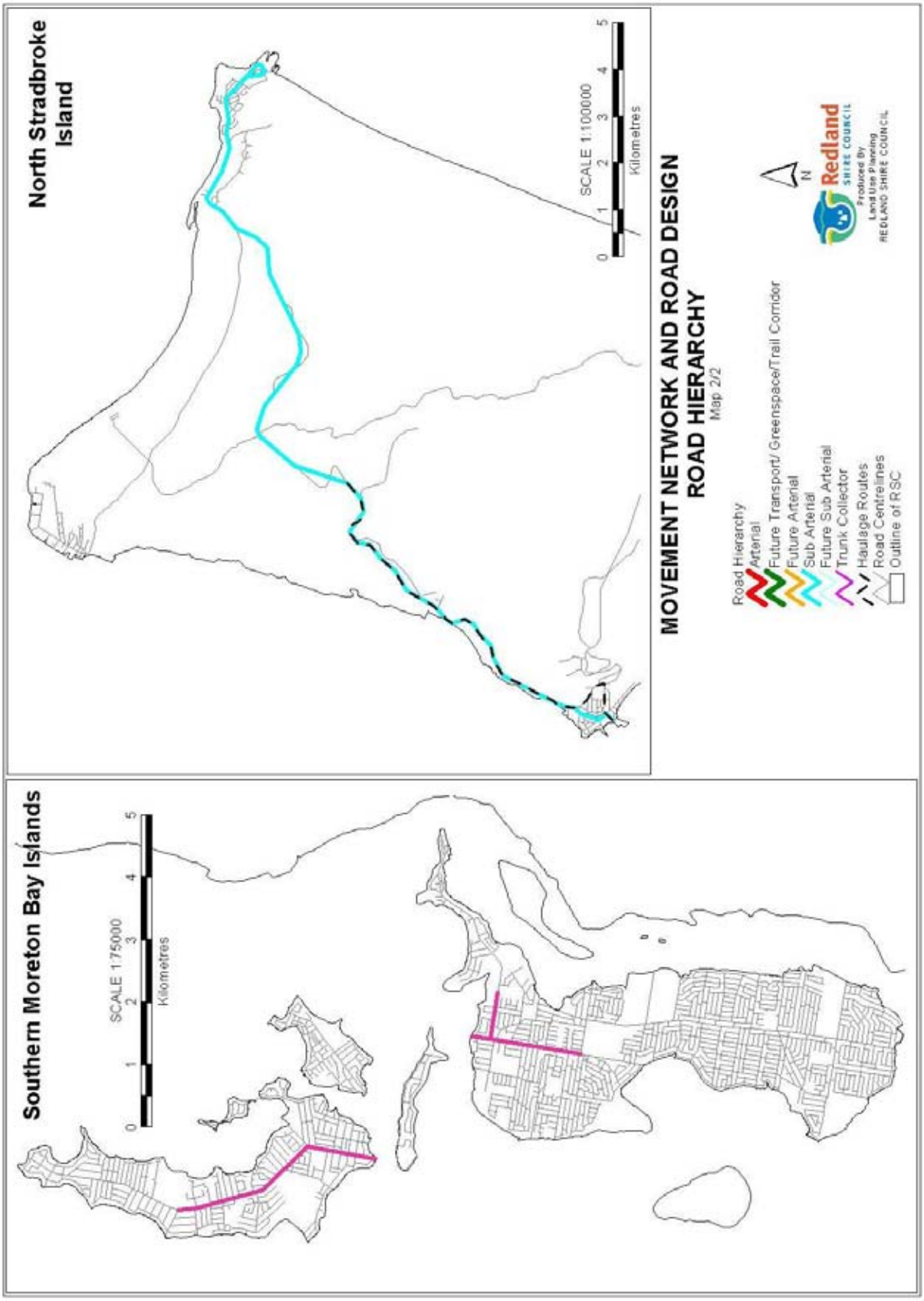

Schedule 7 - Roof Colour Chart

The character of the Islands is in part due to the relationship between the built form, such as houses and shops and the open space and vegetation.

Within this relationship, roofing colour is an important visual link between the buildings and the vegetation.

This schedule has been created to assist in preserving the existing visual quality of the Islands.

The following range of colours will be used as a guide by Council in assessing applications. Applicants are encouraged to utilise this range when choosing roofing colour. These colours seek to complement the existing roof colours and match the natural hues and tones of the environment on the Islands.

Wheat

Merino

Smooth Cream

Birch

Stone

Gull Grey

Caulfield Green

Rivergum

Mist Green

Torres Blue

Mountain Blue

Schedule 7 - Roof Colour Chart

Schedule 7 - Roof Colour Chart

this page purposely
left blank

Schedule 8 - Specific Advertising Devices

Table 1 - Acceptable Solutions applicable to Self-Assessable Development

Self-Assessable Development	
Advertising Device Type	**Acceptable Solutions**
Awning Signs	
Awning Fascia Sign Means a sign painted or attached to the front or side face of an awning.	(1) Awning fascia signs - (a) are directly related to the tenancy; (b) are contained within the outline of the fascia; (c) are fixed to the fascia; (d) do not project more than 200mm from the fascia; (e) are located in accordance with Diagrams 1, 2 and 3 of this Schedule; or
Under Awning Sign Means a sign attached to the underside of an awning. Refer to Diagram 5 - Under Awning Sign.	(2) Under awning signs - (a) are directly related to the tenancy; (b) are no more than - (i) 2.5 metres in length; (ii) 500mm in height; (iii) 300mm in depth; (c) have a minimum clearance of 2.4 metres between any part of the sign and ground level; (d) do not project beyond the awning outline; (e) are not closer than 1.5 metres to the end of the awning; (f) are located in accordance with Diagrams 1, 2 and 3 of this schedule; or
Created Awning Sign Means a pre-manufactured sign attached to and extending beyond the fascia of an awning. Refer to Diagram 6 - Created Awning Sign.	(3) Created awning signs - (a) are on the premises to which the advertisement relates; (b) are a maximum of 600mm above the fascia to which they are attached; (c) have a minimum clearance of 2.4 metres between any part of the sign and ground level; (d) are not longer than 50 percent of the length of the fascia to which they are attached; (e) are centrally located on the fascia; (f) are located in accordance with Diagrams 1, 2 and 3 of this Schedule.
Blind Sign Means a sign painted on, or otherwise affixed to, solid or flexible material suspended from the edge of an awning, verandah or wall. Refer to Diagram 7 - Blind Sign.	(1) Blind signs - (a) are on the premises to which the advertisement relates; (b) do not exceed 50 percent of the area of the blind; (c) have a minimum clearance of 2.4 metres between any rigid part of the sign and ground level.

Self-Assessable Development	
Advertising Device Type	**Acceptable Solutions**
Home Business Sign Means a sign identifying the name and trade or business of the premises occupant. Refer to Diagram 8 - Home Business Sign.	(1) Home business signs - (a) in the instance of self-assessable development have a maximum sign area of 0.25m^2; or (b) in the instance of assessable development have a maximum sign area of 0.5m^2; (c) are painted or otherwise affixed to the premises to which they relate; (d) are affixed so as to be flush on the wall or fence to which they are attached; (e) do not exceed 1.5 metres in height.
Canopy Sign Means a sign painted or otherwise affixed to a canopy structure. Refer to Diagram 9 - Canopy Sign.	(1) Canopy signs - (a) are on the premises to which the advertisement relates; (b) have a minimum clearance of 2.4 metres between any rigid part of the sign and ground level and 2.1 metres between any flexible part of the sign and ground level; (c) do not exceed 50 percent of the area of the canopy; (d) are located in accordance with Diagrams 1, 2 and 3 of this Schedule.
Flag Sign (Commercial) Means a fabric advertising sign hung from a pole for the purpose of advertising or identifying a commercial establishment or activity, but does not include internationally recognised national, state or indigenous flags. Refer to Diagram 10 - Flag Sign (Commercial).	(1) Flag signs, where attached to the side of a building - (a) have a maximum of four single signs displayed per premises; (b) each sign has a maximum sign area of 0.15m^2; or (2) Flag signs, where erected on a pole - (a) have a maximum sign area of 2.4m^2; (b) have a maximum height of 6.5 metres above ground level; (c) are limited to one flag sign per street frontage; or (d) for automotive and retail showrooms they - (i) are limited to one flag sign for every 20 metres of street frontage; (ii) have a maximum sign area of 1.0m^2; (iii) are a maximum height of 4.5 metres above ground level.
Wall Sign Means a sign painted or otherwise affixed flat to a wall. Refer to Diagram 11 - Wall Sign.	(1) Wall signs - (a) are on the premises to which the advertisement relates; (b) project a maximum distance of 200mm from the wall to which they are affixed; (c) have a maximum sign area of 20m^2 or 30 percent of the particular wall area to which they are affixed; (d) do not project beyond the edges of a wall; (e) are located in accordance with Diagrams 1, 2 and 3 of this Schedule.

Self-Assessable Development	
Advertising Device Type	**Acceptable Solutions**
	Note - A wall sign that extends above a wall is considered a created roof sign; Created roof and sky signs are undesirable in the planning scheme area.
Window Sign Means a sign displayed on a window. Refer to Diagram 12 - Window Sign.	(1) Window signs - (a) are on the premises to which the advertisement relates; (b) do not exceed 25 percent of the area of the glass panel or panels on which they are displayed.

Table 2 - Probable Solutions Applicable to Assessable Development

Assessable Development	
Advertising Device Type	**Probable Solutions**
Above Awning Sign (1) Means a sign attached to the roof of the awning. Refer to Diagram 4 - Above Awning Sign.	(1) No probable solution identified.
Billboard Sign (1) Means a sign where the display surface has the width greater than the height and is mounted on one or more vertical supports extending from ground level. The billboard sign does not include signs that promote a construction or reconfiguration project for real estate purposes. These are temporary and are dealt with in Local Law 11 – Control of Signs. Refer to Diagram 13 - Billboard Sign.	(1) No probable solution identified
Created Parapet Line Sign (1) Means a manufactured sign positioned on the façade or wall of a building, which alters the appearance of the roof-line. Refer to Diagram 14 - Created Parapet Line Sign.	(1) Created parapet line signs - (a) are on the premises to which the advertisement relates; (b) do not extend more than 1 metre above the roofline to which they are attached; (c) are located in accordance with Diagrams 1, 2 and 3 of this Schedule. **Note -** These controls may be relaxed where the extension of the sign above the parapet line would increase consistency in architectural features of the premises on which the sign is erected and surrounding premises.
Pillar Sign (1) Means a solid wall or structure detached from a building that is used as an advertising device. Refer to Diagram 15 - Pillar Sign.	(1) Pillar signs - (a) are displayed in a planted landscape; (b) ensure no unsightly back view of the sign from a road or other public place; (c) where a single pillar sign, are not displayed on site unless - (i) the street frontage exceeds 30 metres; (ii) such signs are located a minimum of 20 metres from each other; (d) where facing an adjoining site, are a minimum of 3 metres from the boundary of that site; (e) have a maximum height of 1.2 metres above ground level; (f) have a maximum sign area of $5m^2$.
Pole Sign (1) Means a free standing sign with one or more vertical supports that includes only one advertising sign. Refer to Diagram 16 - Pole Sign.	(1) Pole signs - (a) are on the premises to which the advertisement relates; (b) are double sided or erected so the back of the sign is not visible from a public place;

Assessable Development	
Advertising Device Type	**Probable Solutions**
	(c) are the only pole sign on the premises; (d) have a maximum height of 10 metres; (e) have a maximum sign area of 2.4m^2 per side; (f) have no more than two sides; (g) are illuminated internally or by baffled lamps; (h) do not flash; (i) are not located closer than 25 metres to another pole or pylon sign. **Note -** A sign more than 2 metres in height from natural ground level requires a development permit for building work.
Projecting Image Sign (1) Means an illuminated sign permanently or intermittently projected onto a surface as a static or moving image. Refer to Diagram 17 - Projecting Image Sign.	(1) No probable solution identified
Projecting Wall Sign (1) Means a double-faced sign projecting at right angles from a wall of a building. Refer to Diagram 18 - Projecting Wall Sign.	(1) Projecting wall signs - (a) are on the premises to which the advertisement relates; (b) do not exceed one projecting wall sign per business; (c) have a maximum width of 500mm; (d) have a maximum sign display area of 2m^2; (e) have a minimum clearance of 2.4 metres between the lowest part of the projecting sign and ground level; (f) are located in accordance with Diagrams 1, 2 and 3 of this schedule. **Note -** A projecting wall sign is considered most appropriate where no awning exists.
Pylon Sign (1) Means a sign with its height greater than its width, generally supported by one or more poles, and includes multiple advertising signs. Refer to Diagram 19 - Pylon Sign.	(1) Pylon signs - (a) are on the premises to which the advertisement relates; (b) have a maximum height of 10 metres; (c) have a maximum width of 2.5 metres; (d) have a maximum sign display area of 20m^2; (e) have a maximum of 2 faces; (f) where a premises contains more than one business; the pylon allows for each business to be advertised on the same sign; (g) are a minimum of 3 metres from the boundary of the site; (h) do not expose an unsightly back view of the sign when viewed from a road or other public place;

Assessable Development	
Advertising Device Type	**Probable Solutions**
	(i) are not located closer than 25 metres to another pylon or pole sign; (j) are not illuminated, other than internally.
Replica Object Sign (1) Means a sign designed to replicate or copy an object or shape. The replica may be attached to or constructed as part of a building. The replica may be free standing or form part of a pole sign. Refer to Diagram 20 - Replica Object Sign.	(1) Replica object signs - (a) are the only replica object sign on the premises; (b) are only for a product or service available on the premises on which it is displayed. **Note -** The placing of such a sign will only be considered where the scale and character of the streetscape in which it is displayed is not compromised.
Roof and Sky Signs (1) Refer to Diagram 21 - Roof and Sky Signs. Painted Roof Sign Means a sign painted on the roof of a building Created Roof Sign Means a manufactured sign integrated with the roof. Sky Sign Means a sign positioned on top of a building so that when viewed from the ground the sign has the sky as a backdrop.	(1) Painted roof signs - (a) are on the premises to which the advertisement relates; (b) have a maximum sign area that is the lesser of - (i) 35m^2; or (ii) 50 percent of the area of the roof on which it is painted; or (2) No probable solution identified. (3) No probable solution identified.

Note -

- The following diagrams (1 to 3) identify preferred and non-preferred locations for advertising devices on buildings;
- Advertising devices attached to buildings are to be presented in the preferred locations.

Diagram 1 - Preferred locations for a single storey building

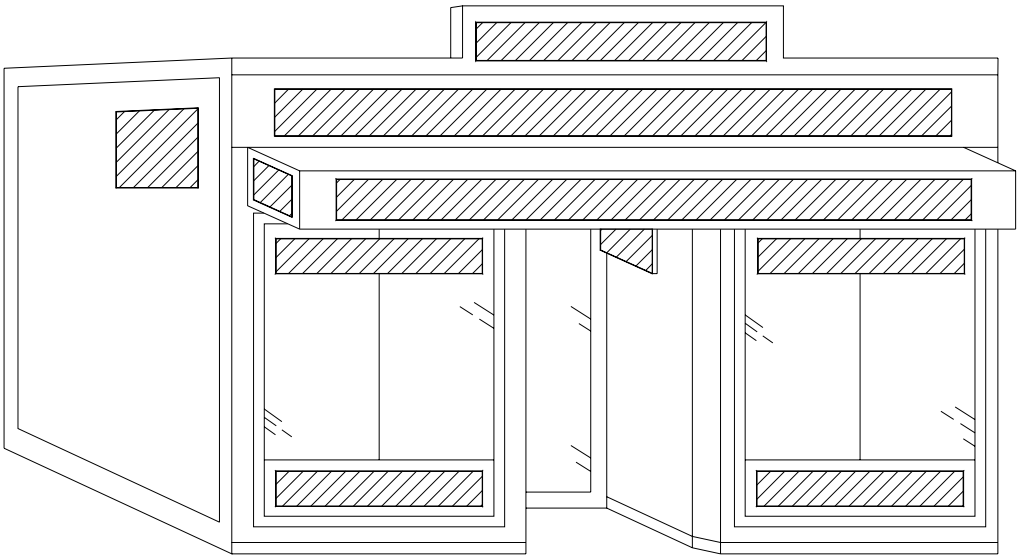

Diagram 2 - Preferred locations for a two storey building

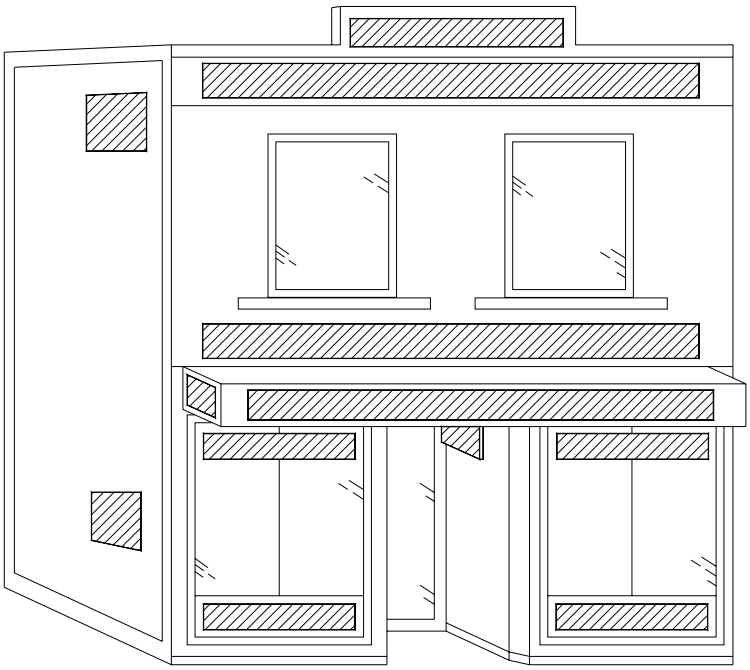

Diagram 3 - Non-preferred locations for advertising devices on buildings

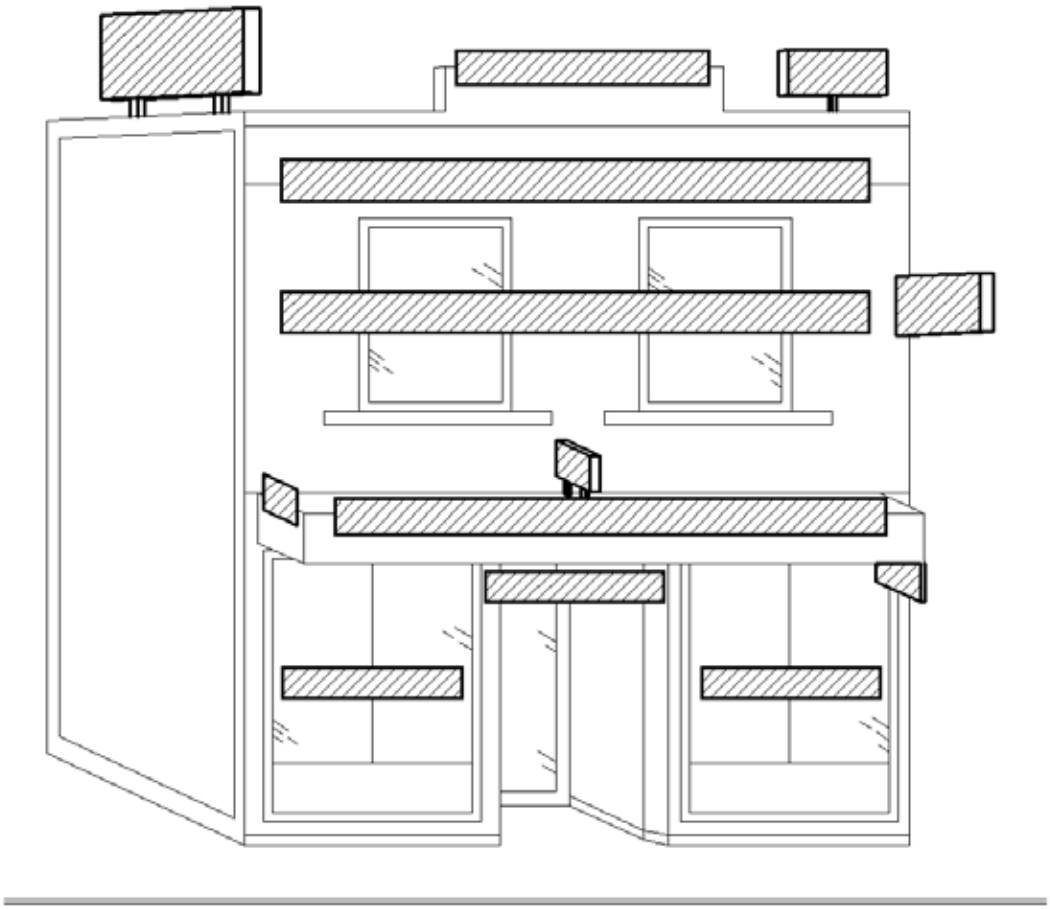

Note -

The following diagrams show examples of specific advertising devices

Diagram 4 - Above Awning Sign

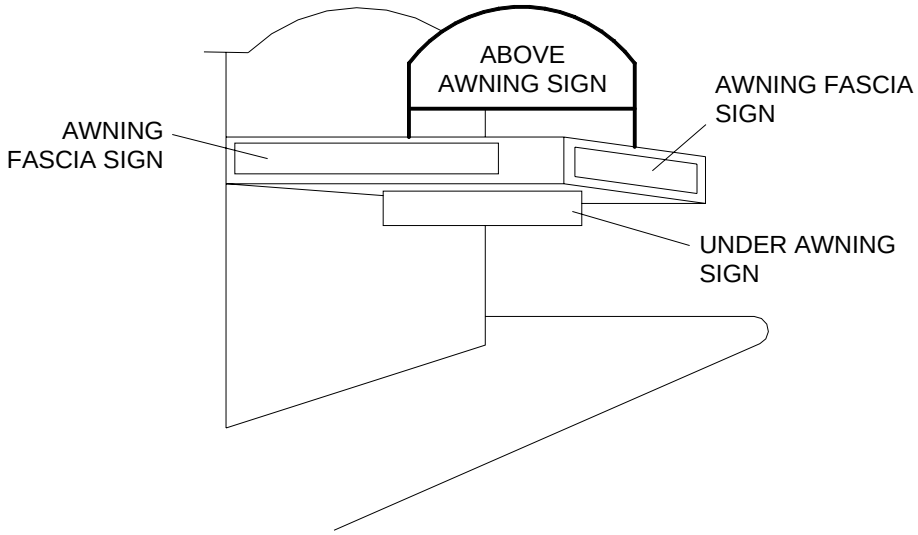

Diagram 5 - Under Awning Sign

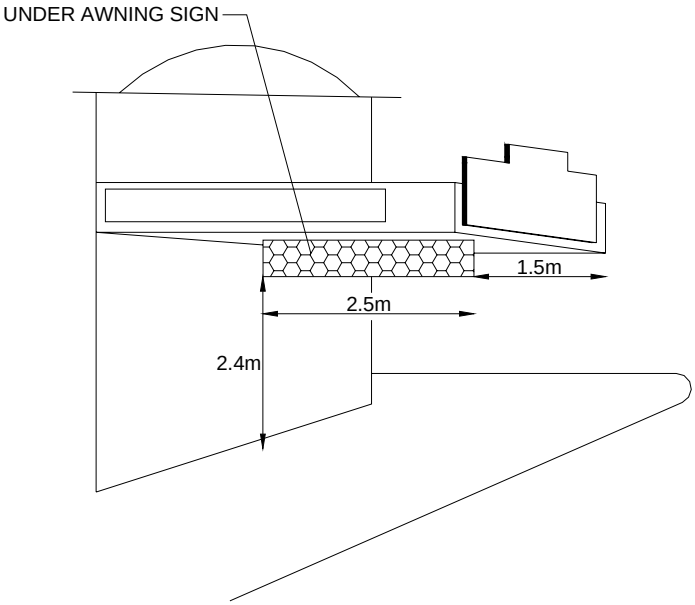

Diagram 6 - Created Awning Sign

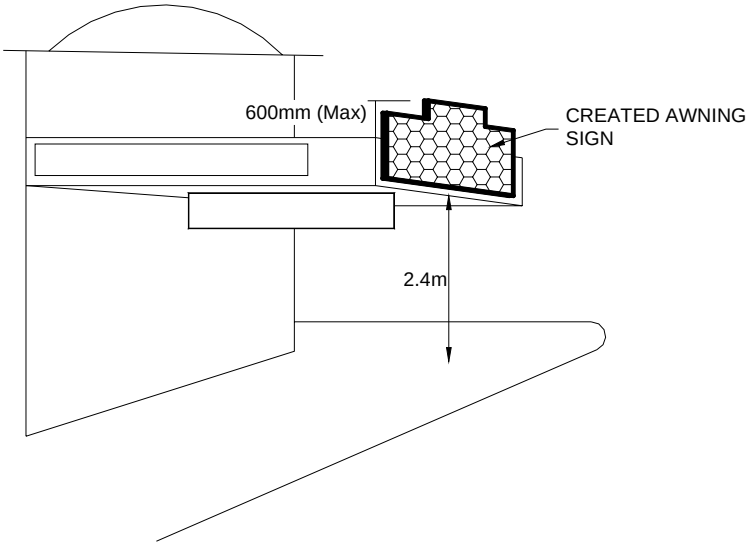

Diagram 7 - Blind Sign

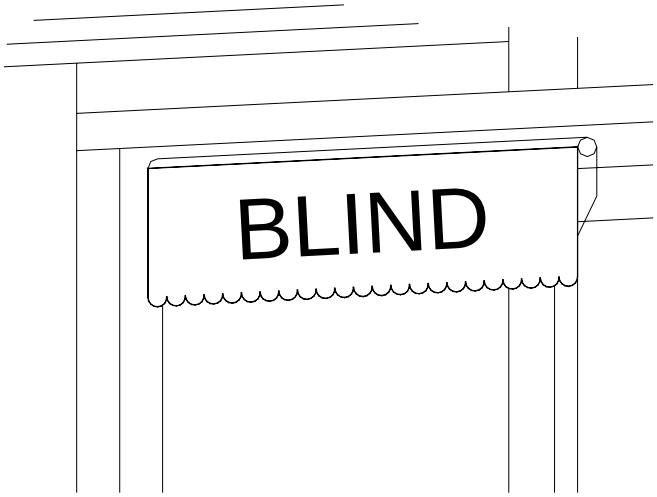

Diagram 8 - Home Business Sign

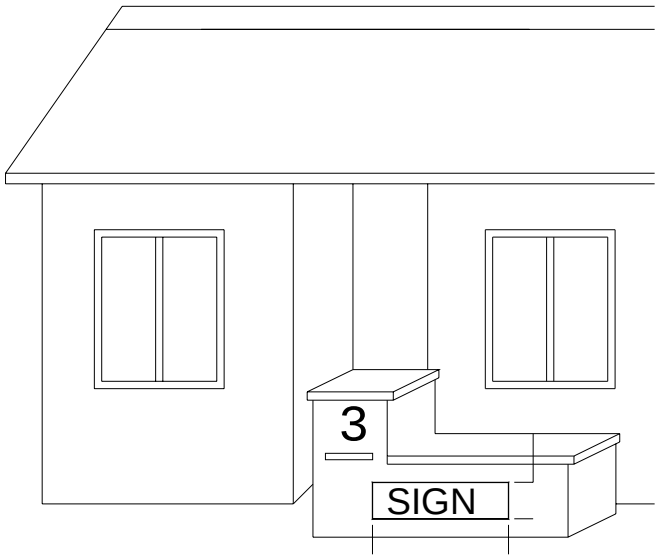

Diagram 9 - Canopy Sign

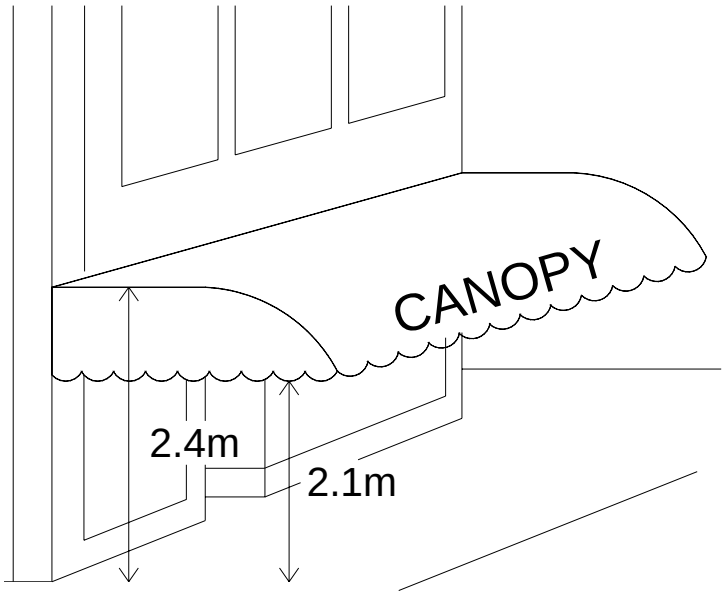

Diagram 10 - Flag Sign (Commercial)

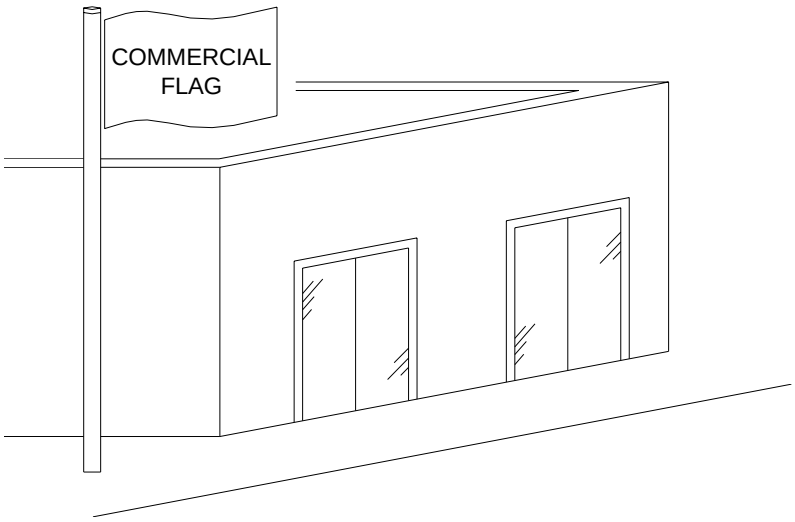

Diagram 11 - Wall Sign

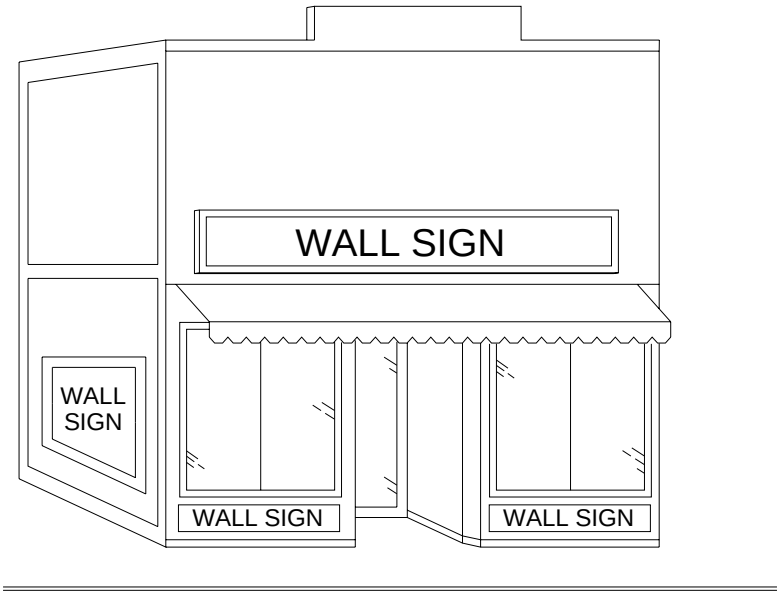

Diagram 12 - Window Sign

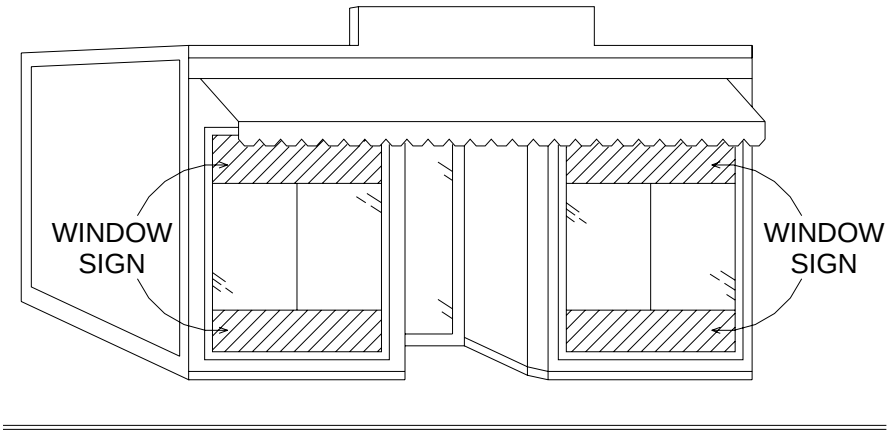

Diagram 13 - Billboard Sign

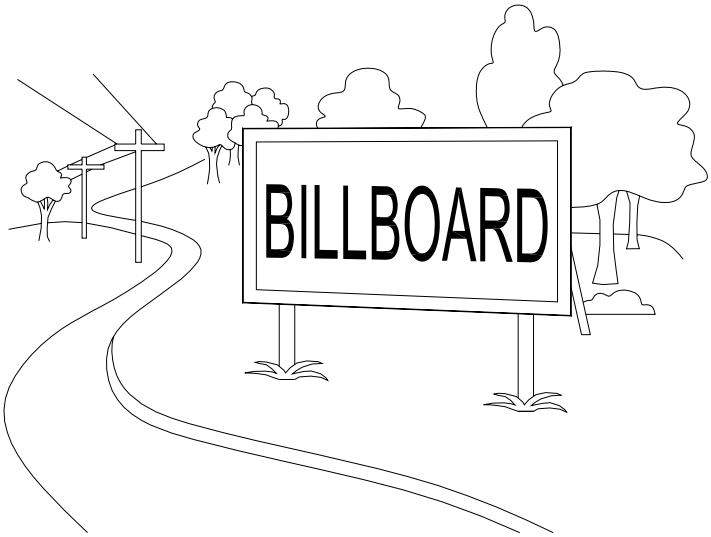

Diagram 14 - Created Parapet Line Sign

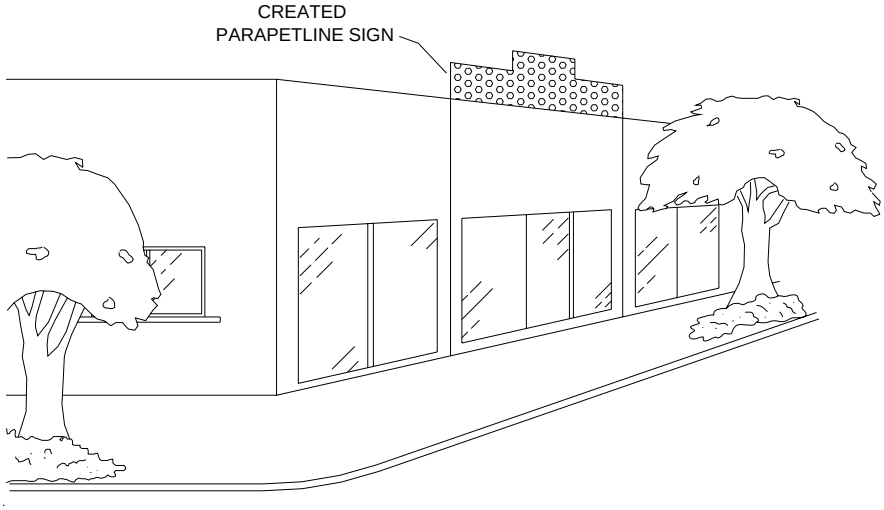

Diagram 15 - Pillar Sign

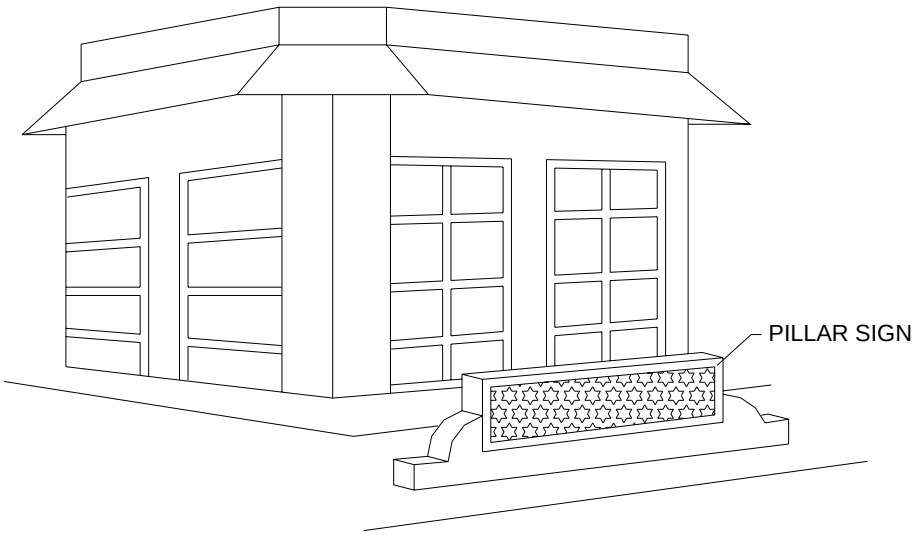

Diagram 16 - Pole Sign

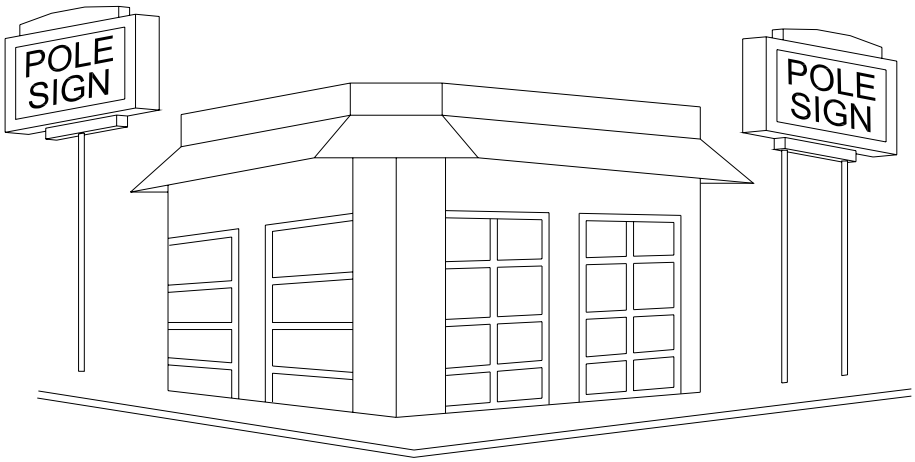

Diagram 17 - Projecting Image Sign

Diagram 18 - Projecting Wall Sign

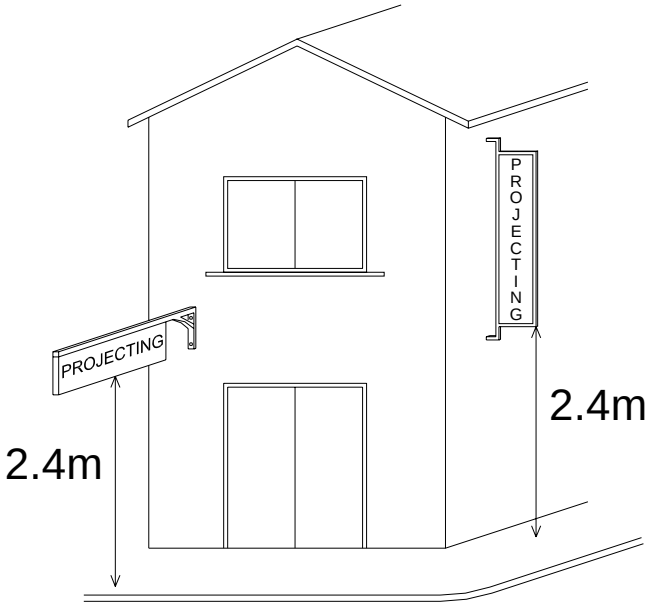

Diagram 19 - Pylon Sign

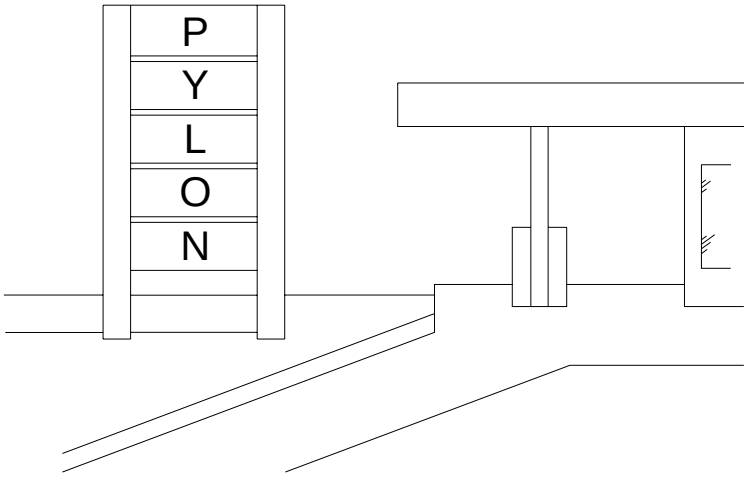

Diagram 20 - Replica Object Sign

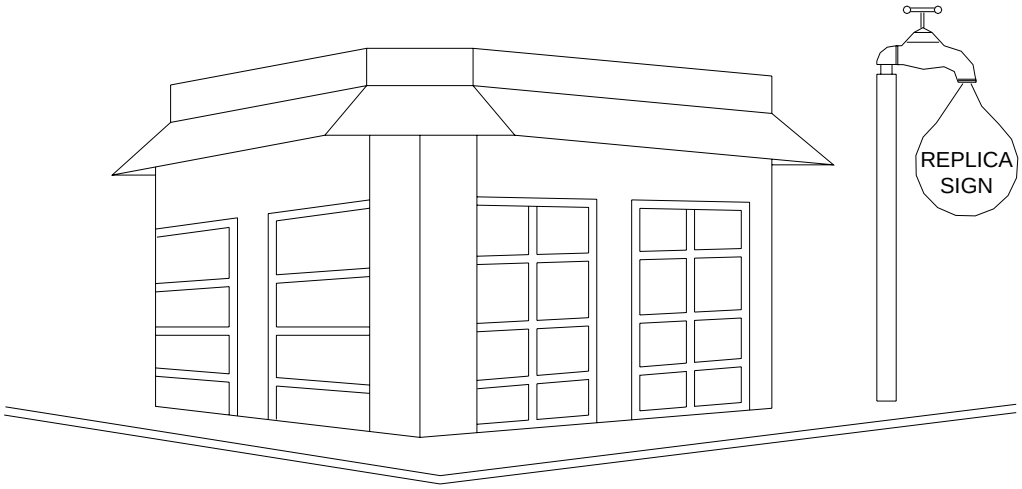

Diagram 21 - Roof and Sky Signs

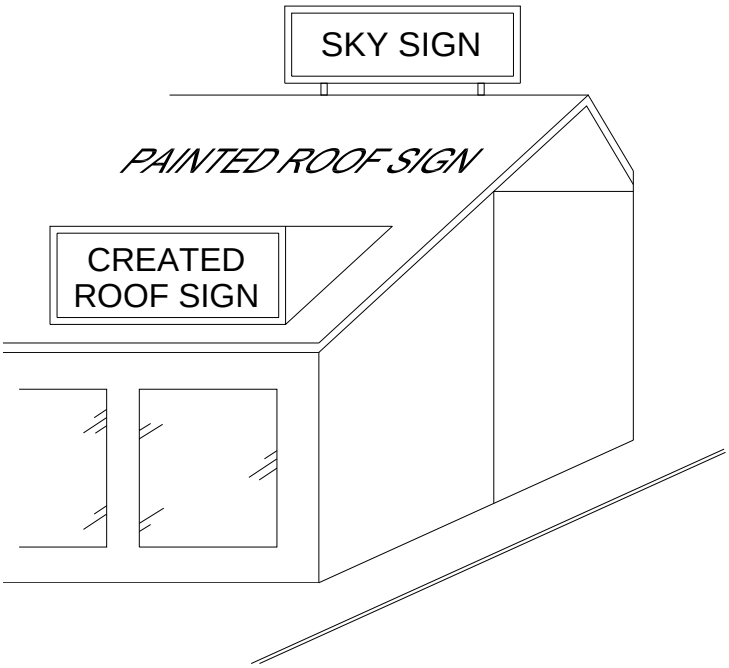

Schedule 9 - Street Trees

Botanical name	Common name	Origin	Koala Food Tree	Height (metres)	Vegetation Association [1] Note - refer to Maps 1 and 2 in Schedule 10							
					R	BB	GG	SG	QB	LR	SW	NSI
Alphitonia excelsa	Soap tree	Indigenous		8	✔	✔	✔	✔	✔	✔	✔	✔
Araucaria heterophylla (with permission)	Norfolk Island pine	Other Native		24								
Banksia integrifolia [2]	Coastal banksia	Indigenous		10		✔		✔		✔	✔	✔
Banksia serrata	Saw banksia	Indigenous		5								✔
Bauhinia blakeana	Hong Kong orchid tree	Exotic		6								
Bauhinia variegata	Purple orchid tree	Exotic		6								
Bauhinia variegata candida	White orchid tree	Exotic		6								
Brachychiton acerifolius [2]	Flame tree	Other Native		10								
Buckinghamia celcissima [2]	Ivory curl tree	Other Native		6								
Caesalpinia ferrea [2]	Leopard tree	Exotic		15								
Callistemon viminalis "Dawson River" [2]	Weeping bottle brush	Other Native		5								
Corymbia citriodora	Spotted gum	Indigenous	✔	25				✔				
Cupaniopsis anacardioides [2]	Tuckeroo	Indigenous		7		✔			✔	✔		✔
Delonix regia	Poinciana	Exotic		8								
Elaeocarpus reticulatus	Blueberry ash	Indigenous		5	✔							✔
Eucalyptus siderophloia	Grey ironbark	Indigenous	✔	30			✔	✔	✔	✔	✔	
Eucalyptus microcorys [2]	Tallowood	Indigenous	✔	36	✔	✔	✔	✔				
Eucalyptus propinqua	Grey gum	Indigenous	✔	15	✔							
Eucalyptus ptychocarpa [2]	Swamp bloodwood	Other Native		6								
Eucalyptus seeana [2]	Narrow leaf grey gum	Indigenous	✔	12			✔	✔	✔		✔	
Eucalyptus tesselaris	Moreton Bay ash	Other Native		12								
Flindersia australis	Crows ash	Indigenous		16	✔					✔		
Flindersia xanthoxyla	Yellow wood	Indigenous		8	✔							
Grevillea baileyana	White oak	Other Native		8								
Harpullia pendula [2]	Tulipwood	Indigenous		8	✔							
Jacaranda mimosifolia (infill only)	Jacaranda	Exotic		10								

Botanical name	Common name	Origin	Koala Food Tree	Height (metres)	Vegetation Association [1] Note - refer to Maps 1 and 2 in Schedule 10							
					R	BB	GG	SG	QB	LR	SW	NSI
Lagerstroemia indica	Chinese crepe myrtle	Exotic		6								
Lagerstroemia speciosa	Pride of India	Exotic		6								
Lophostemon confertus	Brush box	Indigenous	✔	15	✔	✔	✔	✔	✔	✔	✔	✔
Lophostemon suaveolens	Swamp box	Indigenous	✔	10			✔	✔	✔		✔	
Melaleuca argentea	Silver paperbark	Other Native		15								
Melaleuca leucadendron b.l & f.l [2]	Weeping paperbark	Other Native		8								
Melaleuaca quinquenervia [2]	Broad leaf paperbark	Indigenous	✔	9		✔		✔	✔	✔	✔	✔
Metrosideros excelsa	New Zealand Christmas tree	Exotic		8								
Pittosporum rhombifolium	Holly wood	Other Native		6								
Syzygium leuhmanii	Small leaf lillypilly	Indigenous		6	✔							
Syzygium oleosum	Blue lillypilly	Indigenous		8	✔							
Tabebuia rosea	Trumpet tree	Exotic		6								
Tristaniopsis laurina	Water gum	Indigenous		7	✔							
Waterhousia floribunda [2]	Weeping lillypilly	Other Native		8								
Xanthostemon chrysanthus [2]	Golden penda	Other Native		6								

Notes -

1 R: Rainforest/Vine Forest; BB: Blackbutt and Scribbly Gum Open Forest; GG: Grey Gum and Spotted Gum Open Forest; SG: Scribbly Gum Open Forest; QB: Queensland Blue Gum and Rainforest/Melaleuca Wetlands; LR: Littoral Rainforest; SW: Swamp She-Oak Forest; NSI: North Stradbroke Island (Point Lookout only).

2 These species are highly preferred.

Schedule 10 - Vegetation Species List

Map 1 - Mainland Vegetation Associations

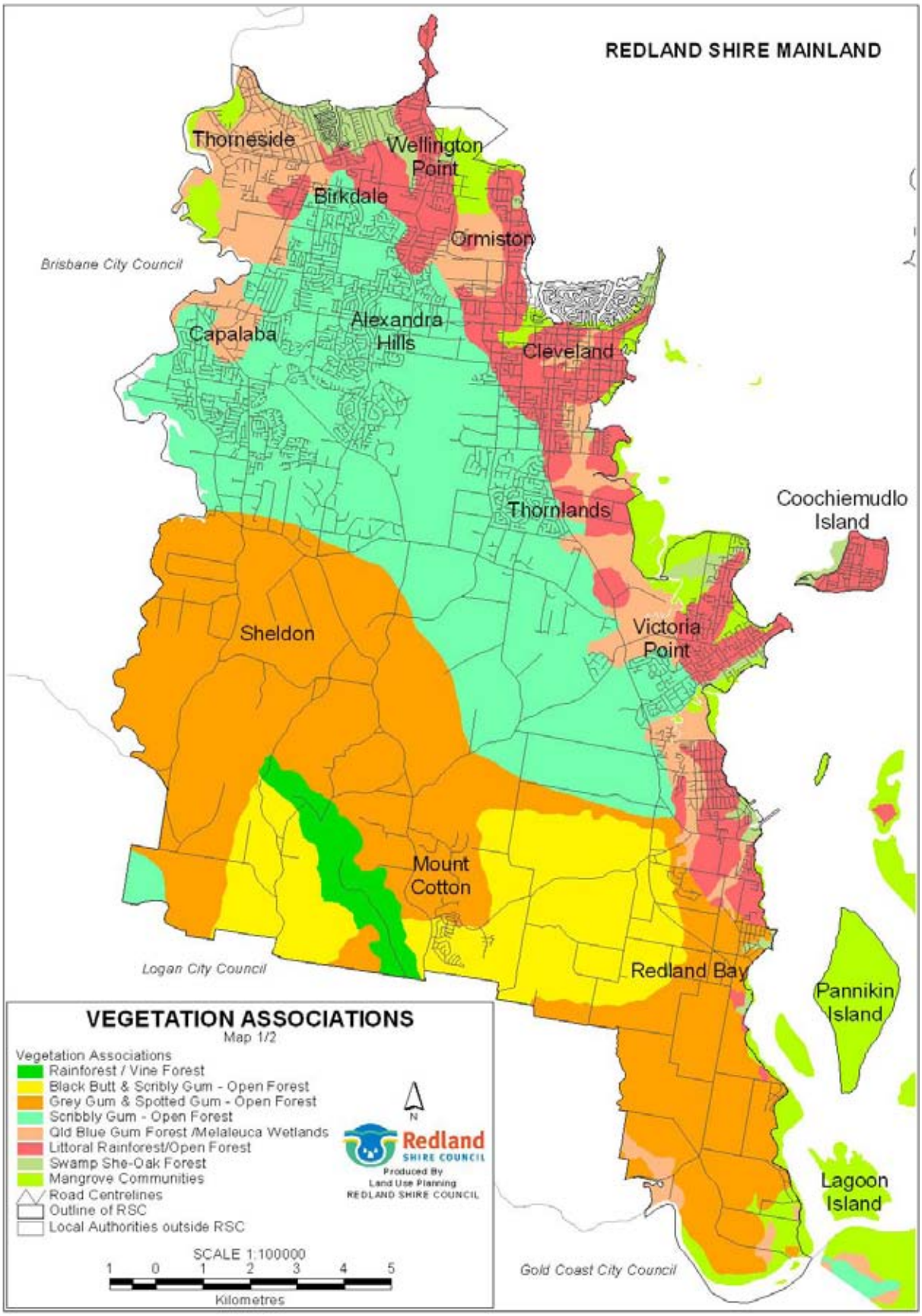

Map 2 - Southern Moreton Bay Islands Vegetation Associations

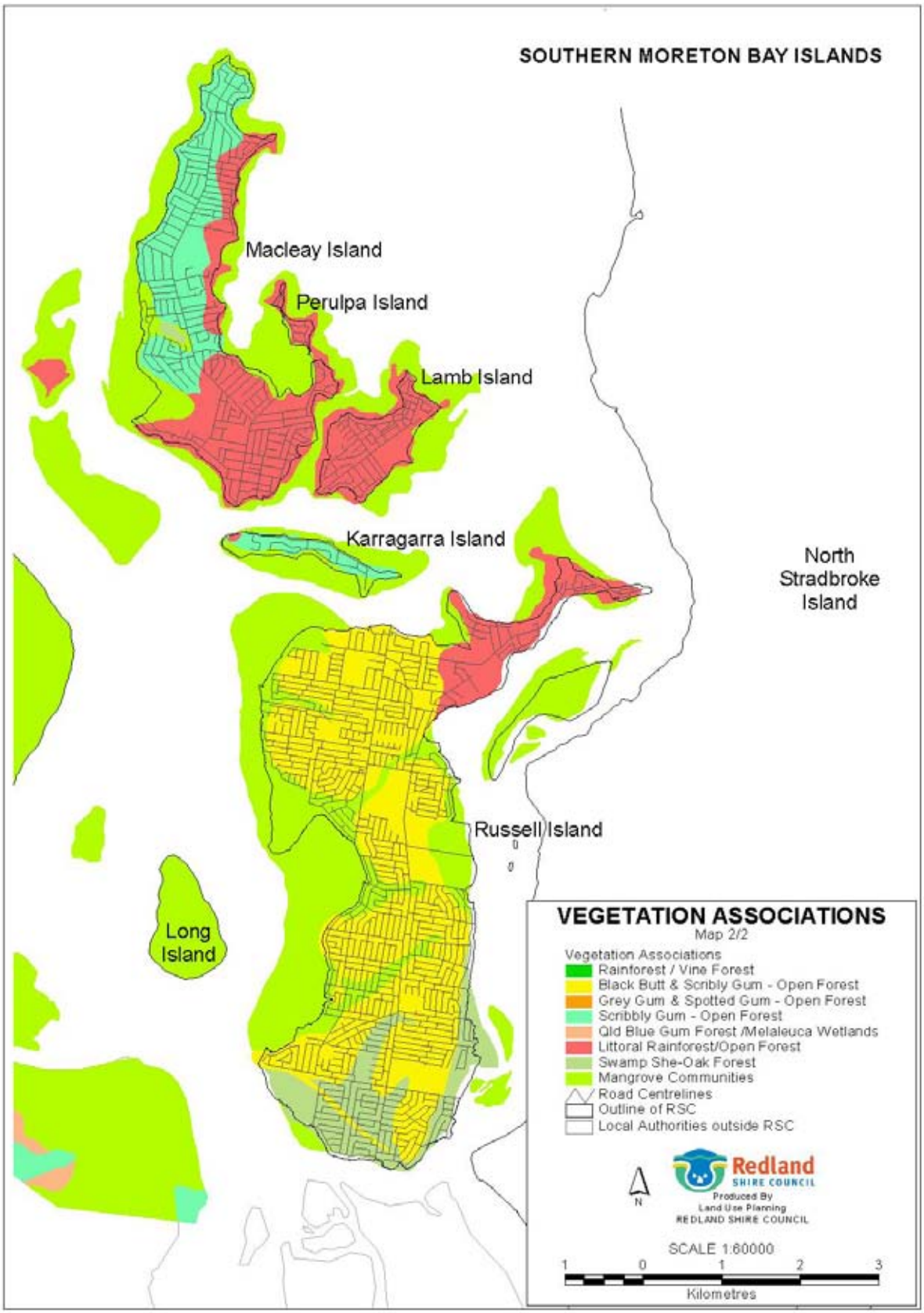

Schedule 10 - Vegetation Species List

Table 1 - Summary of Species Types

Map 1 - Mainland Vegetation Associations	Map 2 - Southern Moreton Bay Islands Vegetation Associations	North Stradbroke Island Vegetation Associations
■ **Part 1 -** Rainforest/Vine Forest - Mainland ■ **Part 2 -** Blackbutt and Scribbly Gum - Open Forest - Mainland ■ **Part 4 -** Grey Gum and Spotted Gum - Open Forest - Mainland ■ **Part 5 -** Scribbly Gum - Open Forest - Mainland ■ **Part 7 -** Queensland Blue Gum Forest/Melaleuca Wetlands - Mainland ■ **Part 9 -** Swamp She-Oak Forest - Mainland	■ **Part 3** - Blackbutt and Scribbly Gum - Open Forest - Southern Moreton Bay Islands ■ **Part 6 -** Scribbly Gum - Open Forest - Southern Moreton Bay Islands ■ **Part 8 -** Littoral Rainforest/Open Forest - Mainland and Southern Moreton Bay Islands	■ **Part 10** - Brushbox/Banksia Woodland/Headland Vegetation - North Stradbroke Island - Point Lookout Area ■ **Part 11** - Bloodwood/Bribie Island Pine Forest - North Stradbroke Island - Amity Point ■ **Part 12** - Littoral Rainforest/Paperbark Woodland - North Stradbroke Island - Dunwich Area including Myora Springs ■ **Part 13 -** Preferred Native Species - Point Lookout - ▸ Table A - Ground covers, climbers, ferns and tussock plants ▸ Table B - Shrubs ▸ Table C - Trees and palms

Table 2 - Indigenous Species Specifications

Land Type	Intent	Indigenous Specification See Note 1			Notes
		Habitat Consolidation	Habitat Link	Balance	
Conservation Reserves Land managed by Council, or within the Conservation, Environmental Protection, Rural Non-Urban or Park Residential Zones, or any other site used for environmental or conservation purposes.	Restoration works undertaken to consolidate habitat and minimise environmental impacts.	100%	100%	100%	Restoration works are undertaken in accordance with necessary specifications, such as risk/fire management. Indigenous species can include species not contained in species list. This is to ensure that difficult to propagate or rare species can be planted into these areas or plants used for colonisation purposes can be included.
Parkland Land managed by Council, or within an Open Space area approved as part of a development application, for recreation purposes.	Landscaping designed to promote the use of indigenous species in informal and formal gardens, and to assist in creating habitat refuges within the urban and rural environment.	80%	80%	60%	Landscaping works are undertaken in accordance with specifications, such as risk management maintenance requirements.
Creeks, wetlands (natural or artificial) and drainage reserves Land managed by Council, or within an environmental or conservation area approved as part of a development application, that carries overland flow or is used for stormwater management.	Restoration works undertaken to consolidate waterways, improve nutrient removal and minimise environmental impacts. Weed transfer potential minimised through use of indigenous species only.	100%	100%	100%	Restoration design provides for required maintenance of infrastructure, risk management and water movement. Indigenous species can include species not contained in species list. This is to ensure that difficult to propagate or rare species can be planted into these areas or plants used for colonisation purposes can be included.

Land Type	Intent	Indigenous Specification [1]			Notes
		Habitat Consolidation	Habitat Link	Balance	
Road Reserves Planting along road reserves under the control of Council.	Landscaping designed to reflect the surrounding environment to enhance the City's green image, improve street amenity and to assist in creating habitat refuges within the urban environment.	80%	80%	50%	DOT/DMR/Energex visibility requirements. The Street Tree Master Plan is reviewed to ensure consistency with these requirements. This review will provide more detailed specification as to the priority streets for developing habitat linkages.
Council Facilities Includes all other Council controlled facilities not identified above including but not limited to depots, sewerage and water treatment plants.	Landscaping designed to promote the use of indigenous species in informal and formal gardens, and to assist in creating habitat refuges within the urban environment.	90%	90%	90%	
Point Lookout NSI Includes any landscaping or restoration work within areas under the control of Council or as required as part of a development approval.	Landscaping and restoration works designed to promote the use of species indigenous to North Stradbroke Island.	100%	NA	NA	
Other development approvals Includes any landscaping required as a result of a development approval under IPA other than in those circumstances identified above.	Landscaping designed to promote the use of indigenous species in informal and formal gardens, and to assist in creating habitat refuges within the urban environment.	80%	80%	50%	Landscape, Streetscape, Street Tree and Vegetation Management Plans approved by Council.

Note [1] - Indigenous species percentages indicate the minimum requirement across all plant forms.

Schedule 10 - Vegetation Species List

Table 3 - Vegetation Association Species List

Part 1 - Rainforest/Vine Forest - Mainland

Scientific Name	Common Name	Form	Description	Wet	Koala	Salt	Street Tree
Acacia bakeri		Tree	40m. Cream ball flowers in spring				
Acacia concurrens	Late black wattle	Tree	Short lived wattle to 8m. Prolific flowers in spring				
Allocasuarina torulosa	Forest she-oak	Tree	10m weeping foliage, can turn purplish in colour, corky bark				
Alphitonia excelsa	Red ash, soap tree	Tree	Grows to 15m. Butterfly food plant. Attractive grey bark, black rounded fruit				✔
Angophora woodsiana	Smudgee	Tree	10-15m large foliage and fruit. Profuse, cream flowers				
Araucaria cunninghamii	Hoop pine	Tree	50m large stately tree pyramid shaped, prickly foliage				
Commersonia bartramia	Brown kurrajong	Tree	Small shade tree to 6 metres. Produces a mass of small white flowers.				
Corymbia intermedia	Pink bloodwood	Tree	20-30m Tree rough tessellated bark, white/cream flowers.		✔		
Eucalyptus acmenoides	White mahogany	Tree	15-30m White flowers. Grey brown, stringy bark, masses of white flowers		✔		
Eucalyptus crebra	Narrow-leaved red ironbark	Tree	20-30m White flowers. Cup-shaped capsules.		✔		
Eucalyptus fibrosa	Broad-leaved red ironbark	Tree	15-30m White flowers. Dark furrowed bark		✔		
Corymbia citriodora	Spotted gum	Tree	20-30m White, strongly fragrant flowers. Attractive mottled pink/grey/green bark		✔		
Eucalyptus microcorys	Tallowood	Tree	30-40m fibrous orange-tinged bark, dense crown, prolific flowers		✔		
Eucalyptus propinqua	Grey gum	Tree	25-30m sheds bark annually, freshly exposed bark is bright orange		✔		✔
Eucalyptus tereticornis	QLD Blue gum	Tree	30m smooth bark with white- bluish grey surface	✔	✔		✔
Ficus coronata	Sandpaper fig	Tree	Tree to 4 metres. Produces large sandpapery leaves and edible fruit. Butterfly food tree. Attracts birds.	✔			
Ficus obliqua	Small-leaved fig	Tree	15-35m Strangling and aerial roots absent. Yellow to orange, globular fruit				
Ficus opposita	Sandpaper fig	Tree	6-10m Young shoots densely covered with soft hairs. Globular or pear-shaped fruit.				
Flindersia australis	Crows ash	Tree	20-30m white flowers, distinctive fruit, large rounded crown				✔
Flindersia bennettiana	Bennett's ash	Tree	15-35m White flowers. Large rounded crown				
Flindersia xanthoxyla	Yellow wood	Tree	8m Fast growing White flowers in summer				✔
Gmelina leichardtii	White beech	Tree	8-15m White with purple & yellow marked flowers. Rounded blue/purple fruit. Large leaved rainforest tree.				
Guioa semiglauca	Native quince	Tree	Attractive foliage, usually multi-stemmed or low branching form				
Harpullia hilli	Tulipwood	Tree	7m black seed enclosed in red aril.				
Jagera pseudorhus	Foam bark	Tree	Feathery foliage with hairy fruit. Take care not to plant over walkways due to irritable hairs on fruit	✔			
Lophostemon confertus	Brush box	Tree	Tall tree to 30m with attractive brown bark.		✔		✔
Macadamia integrifolia	Macadamia nut	Tree	20m toothed leaves, edible nut				
Mallotus philippensis	Red kamala	Tree	17m attractive green foliage, masses of red fruit				
Melia azederach	White cedar	Tree	17m deciduous ferny foliage, white/purple flowers, yellow fruit				
Neolitsia dealbata	White bollygum	Tree	8-12m white backed leaves when young, rounded crown				
Petalostigma pubescens	Quinine bush	Tree	Small tree to 5m with attractive black tessellated bark. Produces yellow fruit.				
Polyscias elegans	Celery wood	Tree	15-20m umbrella shaped crown, narrow canopy palm like in outline	✔			
Rapanea variabilis	Muttonwood	Tree	6m Small cream flowers. Globular blue fruit.				
Sloanea woolsii	Yellow carabeen	Tree	20-40m Small white flowers. Ovoid, prickly fruits. Tall rainforest tree				
Sterculia quadrifida	Peanut tree	Tree	12-18m Dull yellow flowers. Attractive large fruits with orange centres and black seeds.				
Stenocarpus sinuatus	Firewheel tree	Tree	20-30m Orange-red flowers. Woody fruits.				

Scientific Name	Common Name	Form	Description	Wet	Koala	Salt	Street Tree
Syzygium leuhmanii	Riberry	Tree	20-30m White fluffy flowers. Masses of red, pear-shaped fruit. Bright pink new leaves	✔			✔
Toechima tenax		Tree	10m attractive foliage, orange red fruits				
Acacia falcata		Shrub	4m slender trunk, cream ball flowers				
Acacia maidenii	Maiden's wattle	Shrub	5-15m fine foliage. Pale yellow flowers.				
Acacia perangusta	Eprapah wattle	Shrub	Fine leaved wattle with prolific yellow flowers				
Acacia ulicifolia	Prickly moses	Shrub	Hardy shrub with attractive foliage, cream ball flowers				
Alchornea ilicifolia	Native holly	Shrub	3m shiny holly leaves, reddish new growth				
Alectryon connatus	Beach bird eye	Shrub	6m tall bushy shrub, attractive fruits				
Alpinia caerulea	Native ginger	Shrub	Long strap like leaves, blue fruit	✔			
Alyxia ruscifolia	Chain fruit	Shrub	Dark green glossy leaves with sharp point. Perfumed white flowers and orange fruit				
Breynia oblongifolia	Coffee bush	Shrub	2m with small round leaves. May be difficult to source.				
Bursaria spinosa	Sweet bursaria	Shrub	Spiky plant with perfumed white flowers in summer. Good small bird habitat.	✔			
Clerodendrum floribundum	Lolly bush	Shrub	4-5m large rounded leaves, white fragrant flowers, colourful fruit				
Commersonia fraseri	Blackfellow's hemp	Shrub	2-6m Branches bearing woolly hairs. White or cream flowers.				
Ficus fraseri	Sandpaper fig	Shrub	10m. Sandpaper leaves, attracts birds	✔			
Hibiscus heterophyllus	Native rosella	Shrub	3-6m Pink, pale yellow or bright yellow flowers.				
Hovea acutifolia	Pointed leaf hovea	Shrub	Dark green leaves, deep violet pea-flowers in August				
Indigofera australis	Native indigo	Shrub	Fine foliage with masses of purple/white flowers				
Leptospermum polygalifolium	Wild may	Shrub	Weeping open habit, white open flowers in profusion in late winter				
Oxylobium ilicifolium	Holly pea	Shrub	2m Yellow-orange pea-flowers.				
Pultenaea retusa	A bush pea	Shrub	1-2m flowers yellow late winter, early spring				
Westringia eremicola	Native westringia	Shrub	1.5m White or mauve flowers.				
Commelina cyanea	Native wandering jew	Creeper	Creeper with green shiny leaves and blue flowers, revegetation only, weedy in cultivation				
Adiantum hispidulum	Rough maiden hair	Fern	Delicate fan shaped fronds. Young fronds are pink				
Calochlena dubia	False bracken fern	Fern	Delicate fern				
Doodia aspera	Prickly rasp fern	Fern	Dark green erect fronds				
Cymbopogon refractus	Barb-wire grass	Grass	Tall grass to 1 metre. Flowers appear like clusters of barbed wire. Blue green foliage and red stems make this an attractive grass.				
Oplismenus aemulus	Basket grass	Grass	Perennial trailing grass which roots at nodes, oval leaves				
Ottochloa gracillima	Slender shade grass	Grass	Creeping grass, forms dense mats, partial to full shade				
Themeda triandra	Kangaroo grass	Grass	Grass to 60cm. Produces attractive seed head and fine light green foliage. Benefits from annual prune.				
Cyperus enervis	Sedge	Herb	15-30cm Forms loose, slender tussocks. Numerous spikelets about 1cm long.	✔			
Fimbristylis dichotoma	Common fringe-rush	Herb	20-40cm Reddish-brown spikelets. Shiny brown nuts.	✔			
Goodenia rotundifolia	A fan flower	Herb	0.3m Yellow flowers with purple throat. Fruit 0.5cm long.				
Plectranthus parviflorus	Native coleus	Herb	Fleshy leaved herb, spikes of mauve-blue flowers				
Tripladenia cunninghamii	Wire lily	Herb	Wiry stems & broads leaves, semi shade has pale pink flowers				
Gahnia aspera	Red fruited saw-sedge	Sedge	Clumping plant, red-brown shiny fruit				
Aristolochia pubera		Trailer	1-2m across. Thin hairy leaves. Pale green-brown flowers, butterfly host plant				
Cordyline rubra	Palm lily	Tufting	2-4m Forms sparse clumps of a few stems. Lilac flowers. Globular, red berries.				
Cordyline stricta	Palm lily	Tufting	3-4m Large sprays of red fruit.				
Dianella caerulea	Flax lily, blue-berry lily	Tussock	Clumping plant to 60cm that spreads by suckers. Produces blue star like flowers & bright blue-purple fruit.				
Lomandra longifolia	Long leaved matrush	Tussock	Large clumping plant to 1 metre. Produces large spikes of cream highly perfumed flowers.	✔			
Cissus antarctica	Native grape	Vine	Lime green leaves , tendrils, black grape-like fruit, vigorous climber/ground cover				
Eustrephus latifolius	Wombat berry	Vine	Scrambling plant. Produces small pink lily flowers followed by bright orange fruit.				

Scientific Name	Common Name	Form	Description	Wet	Koala	Salt	Street Tree
Geitonoplesium cymosum	Scrambling lily	Vine	Scrambling plant with shiny dark green leaves. Produces white star like flowers followed by black fruit.				
Hardenbergia violacea	False sarsaparilla	Vine	Scrambling vine produces a profusion of purple pea flowers in winter-spring.				
Pandorea pandorana	Bower of glory	Vine	Beautiful large white to mauve flowers				

Part 2 - Blackbutt and Scribbly Gum - Open Forest - Mainland

Scientific Name	Common Name	Form	Description	Wet	Koala	Salt	Street Tree
Allocasuarina littoralis	Black she-oak	Tree	10m bright-green 'needle like' foliage, excellent self-mulching				
Alphitonia excelsa	Red ash, Soap tree	Tree	Grows to 15m. Butterfly food plant. Attractive grey bark, black rounded fruit				✔
Banksia integrifolia	Coastal banksia	Tree	Medium tree to 10 - 15m. Yellow banksia flowers over a long period. Attracts honeyeaters.				✔
Callistemon salignus	Red tips	Tree	Red new growth, cream brush flowers with papery bark	✔			
Corymbia intermedia	Pink bloodwood	Tree	20-30m Tree rough tessellated bark, white/cream flowers.		✔		
Cupaniopsis anacardioides	Tuckeroo	Tree	Excellent shade tree to 10m. Produces large crops of yellow fruit.				✔
Eucalyptus microcorys	Tallowood	Tree	30-40m fibrous orange-tinged bark, dense crown, prolific flowers		✔		
Eucalyptus pilularis	Blackbutt	Tree	Tall eucalypt to 30m. Half bark black and half smooth				
Eucalyptus racemosa	Scribbly gum	Tree	Tall tree to 30m with attractive white bark.		✔		
Eucalyptus siderophloia	Ironbark	Tree	25-30m deeply furrowed grey-black bark		✔		
Eucalyptus tereticornis	QLD Blue gum	Tree	30m smooth bark with white- bluish grey surface	✔	✔		✔
Ficus coronata	Sandpaper fig	Tree	Tree to 4 metres. Produces large sandpapery leaves and edible fruit. Butterfly food tree. Attracts birds.	✔			
Glochidion sumatranum	Umbrella cheese wood tree/ Button wood	Tree	10m green to red-cheese shaped fruits. Fast growing has umbrella shaped foliage	✔			
Lophostemon confertus	Brush box	Tree	Tall tree to 30m with attractive brown bark.		✔		✔
Mallotus philippensis	Red kamala	Tree	17m attractive green foliage, masses of red fruit				
Melaleuca quinquenervia	Paper barked tea-tree	Tree	Trees to 30 metres. White papery bark. Produces masses of creamy white brush flowers in autumn. Excellent nectar producer. Will tolerate dry spells.	✔	✔		✔
Syzygium oleosum	Blue lily pilly	Tree	6-10m White flowers. Blue fruit. Leaves aromatic when crushed.	✔			✔
Acacia maidenii	Maiden's wattle	Shrub	5-15m fine foliage. Pale yellow flowers.				
Banksia spinulosa var collina	Golden candles	Shrub	Shrub to 3 metres. Produces large yellow flowers in winter and spring.				
Banksia robur	Swamp banksia	Shrub	Large leaved shrub to 2 metres. Produces large green flowers laden with nectar from summer to winter.	✔			
Bursaria spinosa	Sweet bursaria	Shrub	Spiky plant with perfumed white flowers in summer. Good small bird habitat.	✔			
Dodonaea triquetra	Large leaved hop bush	Shrub	Shrub to 2 metres. Produces attractive hop like fruit that are either lime green or purple.				
Hakea florulenta	A hakea	Shrub	1-3.5m Creamy-white flowers. Woody, warty fruit.				
Hibiscus heterophyllus	Native rosella	Shrub	3-6m Pink, Pale yellow or bright yellow flowers.				
Leptospermum polygalifolium	Wild may	Shrub	Weeping open habit, white open flowers in profusion in late winter				
Melaleuca linarifolia	Paper barked tea-tree	Shrub	Dense fine foliage, masses of white brush flowers in late spring				
Melaleuca sieberi	A tea tree	Shrub	6-15m Cream, papery bark. White or pinkish flowers.				
Melastoma affine	Blue-tongue or Native tibochina	Shrub	Shrub to 1,5 metres. Produces large open pink/mauve flowers followed by edible fruit. Responds to pruning.	✔			
Petalostigma triloculare	Cracker bush	Shrub	Round marble-sized orange fruit, soft leaves arching habit				
Cymbopogon refractus	Barb-wire grass	Grass	Tall attractive grass to 1 metre. Flowers appear like clusters of barbed wire. Blue green foliage and red stems.				
Ottochloa gracillima	Slender shade grass	Grass	Creeping grass, forms dense mats, partial to full shade				
Themeda triandra	Kangaroo grass	Grass	Grass to 60cm. Produces attractive seed head and fine light green foliage. Benefits from annual prune.				

Scientific Name	Common Name	Form	Description	Wet	Koala	Salt	Street Tree
Olearia nernstii	Native daisy, Snow bush	Herb	To 1.5m tall, white daisy like flowers in spring, suitable for cottage style gardens				
Isolepis nodosa	A sedge	Sedge	Thin leaved tufting to 1m.	✔			
Dianella caerulea	Flax lily, Blue-berry lily	Tussock	Clumping plant to 60cm that spreads by suckers. Produces blue star like flowers followed by bright blue-purple fruit.				
Eustrephus latifolius	Wombat berry	Vine	Scrambling plant. Produces small pink lily flowers followed by bright orange fruit.				
Geitonoplesium cymosum	Scrambling lily	Vine	Scrambling plant with shiny dark green leaves and wiry stems. White star like flowers followed by black fruit.				
Hardenbergia violacea	False sarsaparilla	Vine	Scrambling vine produces a profusion of purple pea flowers in winter-spring.				
Smilax australis	Barb wire vine	Vine	Vigorous vine with bright green leaves and small spines				
Lomandra longifolia	Long leaved matrush	Tussock plant	Large clumping plant to 1 metre. Produces large spikes of cream highly perfumed flowers.	✔			

Schedule 10 - Vegetation Species List

Part 3 - Blackbutt and Scribbly Gum - Open Forest - Southern Moreton Bay Islands

Scientific Name	Common Name	Form	Description	Wet	Koala	Salt	Street Tree
Acacia leiocalyx		Tree	Short lived wattle to 8m. Prolific flowers in winter.				
Allocasuarina littoralis	Black she-oak	Tree	10m bright-green 'needle like' foliage, excellent self-mulching				
Alphitonia excelsa	Red ash, Soap tree	Tree	Grows to 15m. Butterfly food plant. Attractive grey bark, black rounded fruit				✔
Banksia integrifolia	Coastal banksia	Tree	Medium tree to 10 - 15m. Yellow banksia flowers over a long period. Attracts honeyeaters.				✔
Callistemon salignus	Red tips	Tree	Red new growth, cream brush flowers with papery bark	✔			
Corymbia intermedia	Pink bloodwood	Tree	20-30m Tree rough tessellated bark, white/cream flowers.		✔		
Commersonia bartramia	Brown kurrajong	Tree	Small shade tree to 6 metres. Produces a mass of small white flowers.				
Cupaniopsis anacardioides	Tuckeroo	Tree	Excellent shade tree to 10m. Produces large crops of yellow fruit.				✔
Eucalyptus microcorys	Tallowood	Tree	30-40m fibrous orange-tinged bark, dense crown, prolific flowers		✔		
Eucalyptus pilularis	Blackbutt	Tree	Tall eucalypt to 30m. Half bark black and half smooth				
Eucalyptus racemosa	Scribbly gum	Tree	Tall tree to 30m with attractive white bark.		✔		
Eucalyptus siderophloia	Ironbark	Tree	25-30m deeply furrowed grey-black bark		✔		
Eucalyptus tereticornis	QLD Blue gum	Tree	30m smooth bark with white- bluish grey surface	✔	✔		✔
Glochidion ferdinandii	Cheese wood tree	Tree	10m green to red-cheese shaped fruits. Fast growing	✔			
Glochidion sumatranum	Umbrella cheese wood tree/ Button wood	Tree	10m green to red-cheese shaped fruits. Fast growing has umbrella shaped foliage	✔			
Lophostemon confertus	Brush box	Tree	Tall tree to 30m with attractive brown bark.		✔		✔
Melaleuca quinquenervia	Paper barked tea-tree	Tree	Trees to 30 metres. White papery bark. Produces masses of creamy white brush flowers in autumn. Excellent nectar producer. Will tolerate dry spells.	✔	✔		✔
Petalostigma pubescens	Quinine bush	Tree	Small tree to 5m with attractive black tessellated bark, produces yellow fruit				
Acacia suaveolens	Sweet wattle	Shrub	Shrub to 3m with sweet scented flowers, responds well to pruning. Good small screen.				
Banksia aemula	Wallum	Shrub	Small tree to 6m. Large cream banksia flowers attract honeyeaters.	✔			
Banksia robur	Swamp banksia	Shrub	Large leaved shrub to 2 metres. Produces large green flowers laden with nectar from summer to winter.	✔			
Bursaria spinosa	Sweet bursaria	Shrub	Spiky plant with perfumed white flowers in summer. Good small bird habitat.	✔			
Dodonaea triquetra	Large leaved hop bush	Shrub	Shrub to 2 metres. Produces attractive hop like fruit that are either lime green or purple.				
Hakea florulenta	A hakea	Shrub	1-3.5m Creamy-white flowers. Woody, warty fruit.				
Leptospermum polygalifolium	Wild may	Shrub	Weeping open habit, white open flowers in profusion in late winter				
Melastoma affine	Blue-tongue or Native tibochina	Shrub	Shrub to 1,5 metres. Produces large open pink/mauve flowers followed by edible fruit. Responds to pruning.	✔			
Pultenaea retusa	A bush pea	Shrub	1-2m flowers yellow late winter early spring				
Cymbopogon refractus	Barb-wire grass	Grass	Tall attractive grass to 1 metre. Flowers appear like clusters of barbed wire, Blue green foliage and red stems.				
Ottochloa gracillima	Slender shade grass	Grass	Creeping grass, forms dense mats, partial to full shade				
Themeda triandra	Kangaroo grass	Grass	Grass to 60cm. Produces attractive seed head and fine light green foliage. Benefits from annual prune.				
Dianella caerulea	Flax lily, Blue-berry lily	Tussock	Clumping plant to 60cm that spreads by suckers. Produces blue star like flowers followed by bright blue-purple fruit.				

Schedule 10 - Vegetation Species List

Scientific Name	Common Name	Form	Description	Wet	Koala	Salt	Street Tree
Gahnia sieberana	Sword grass	Tussock	Tall sedge to 1.5 metres. Produces tall heads of brown flowers with bright red seeds.	✔			
Lomandra longifolia	Long leaved matrush	Tussock plant	Large clumping plant to 1 metre. Produces large spikes of cream highly perfumed flowers.	✔			
Goodenia rotundifolia	A fan flower	Herb	0.3m Yellow flowers with purple throat. Fruit 0.5cm long.				
Scaevola ramosissima	Fan flower	Herb	Ground cover, blue fan shaped flowers.				
Eustrephus latifolius	Wombat berry	Vine	Scrambling plant. Produces small pink lily flowers followed by bright orange fruit.				
Geitonoplesium cymosum	Scrambling lily	Vine	Scrambling plant with shiny dark green leaves and wiry stems. White star like flowers followed by black fruit.				
Hardenbergia violacea	False sarsaparilla	Vine	Scrambling vine produces a profusion of purple pea flowers in winter-spring.				
Smilax australis	Barb wire vine	Vine	Vigorous vine with bright green leaves and small spines				
Smilax glycophylla	Native sarsaparilla	Vine	Useful foliage plant, good for covering trellis or low fences. Leaves edible				

Part 4 - Grey Gum and Spotted Gum - Open Forest - Mainland

Scientific Name	Common Name	Form	Description	Wet	Koala	Salt	Street Tree
Acacia aulacocarpa	Early black wattle	Tree	Short lived wattle to 8m. Prolific flowers in winter.				
Acacia concurrens	Late black wattle	Tree	Short lived wattle to 8m. Prolific flowers in spring.				
Acacia melanoxylon	Blackwood	Tree	15m wattle pale yellow flowers				
Acmena smithii	Lily pilly	Tree	Medium sized tree to 20m new pink growth, white flowers in summer followed by pink edible fruit.	✔			
Allocasuarina torulosa	Forest she-oak	Tree	10m weeping foliage, can turn purplish in colour, corky bark				
Allocasuarina littoralis	Black she-oak	Tree	10m bright-green 'needle like' foliage, excellent self-mulching				
Alphitonia excelsa	Red ash, Soap tree	Tree	Grows to 15m. Butterfly food plant. Attractive grey bark, black rounded fruit				✔
Backhousia myrtifolia	Grey myrtle	Tree	Large shrub or small tree to 7m with open habit. White flowers in summer				
Callistemon salignus	Red tips	Tree	Red new growth, cream brush flowers with papery bark	✔			
Corymbia intermedia	Pink bloodwood	Tree	20-30m Tree rough tessellated bark, white/cream flowers.		✔		
Corymbia trachyphloia	Brown bloodwood	Tree	20-25m yellowish brown rough bark				
Cryptocarya microneura	Murrogun	Tree	10-15m Native laurel with lush green leaves, slow growing				
Eucalyptus curtisii	Brisbane mallee	Tree	5m multi-trunked, fast growing, mass of white blossom in October.				
Eucalyptus fibrosa	Broad-leaved red ironbark	Tree	15-30m White flowers. Dark furrowed bark		✔		
Corymbia citriodora	Spotted gum	Tree	20-30m White, strongly fragrant flowers. Attractive mottled pink/grey/green bark		✔		
Eucalyptus major	Grey gum	Tree	20-30m White flowers, Attractive orange/cream/grey bark		✔		
Eucalyptus microcorys	Tallowood	Tree	30-40m fibrous orange-tinged bark, dense crown, prolific flowers		✔		
Eucalyptus resinifera	Red mahogany	Tree	20-35m White to cream flowers. Elongated buds.		✔		
Eucalyptus seeana	Narrow-leaved red gum	Tree	30m fast growing, attractive pendulous habit.		✔		✔
Eucalyptus siderophloia	Ironbark	Tree	25-30m deeply furrowed grey-black bark		✔		
Lophostemon confertus	Brush box	Tree	Tall tree to 30m with attractive brown bark.		✔		✔
Lophostemon suaveolens	Swamp mahogany	Tree	20m flaky bark tree with white flowers.	✔	✔		✔
Neolitsia dealbata	White bollygum	Tree	8-12m white backed leaves when young, rounded crown				
Rapanea variabilis	Muttonwood	Tree	6m Small cream flowers. Globular blue fruit.				
Acacia falcata		Shrub	4m slender trunk, cream ball flowers				
Acacia juncifolia	Rush leaf wattle	Shrub	2m very fine leaves, flowers are golden yellow balls				
Acacia maidenii	Maiden's wattle	Shrub	5-15m fine foliage. Pale yellow flowers.				
Acacia perangusta	Eprapah wattle	Shrub	Fine leaved wattle with prolific yellow flowers				
Baeckea virgata	Twiggy myrtle	Shrub	Excellent screening plant, mass of tiny white flowers in summer. 3m x 1.5m				
Commersonia fraseri	Blackfellow's hemp	Shrub	2-6m Branches bearing woolly hairs. White or cream flowers.				
Hibbertia stricta	Erect guinea flower	Shrub	0.3-1.2m Bright yellow flowers, sessile or on stalks.				
Hovea acutifolia	Pointed leaf hovea	Shrub	Dark green leaves, deep violet pea-flowers in August				
Indigofera australis	Native indigo	Shrub	Fine foliage with masses of purple/white flowers				
Jacksonia scoparia	Dogwood, Native broom	Shrub	Needle like leaves, erect or drooping habit, golden yellow flowers				
Leptospermum polygalifolium	Wild may	Shrub	Weeping open habit, white open flowers in profusion in late winter				
Pittosporum revolutum	Yellow pittosporum	shrub	2.5m prolific pale yellow flowers, colourful yellow-orange fruits				
Pultenaea euchila	Orange flowered pultenaea	Shrub	3m Reasonably hardy. Yellow/orange pea-flowers.				
Pultenaea villosa	Hairy bush pea	Shrub	Weeping habit, soft leaves, small yellow and red pea-flowers				

Schedule 10 - Vegetation Species List

Scientific Name	Common Name	Form	Description	Wet	Koala	Salt	Street Tree
Westringia eremicola	Native westringia	Shrub	1.5m White or mauve flowers.				
Commelina cyanea	Native wandering jew	Creeper	Creeper with green shiny leaves and blue flowers, revegetation only, weedy in cultivation				
Cymbopogon refractus	Barb-wire grass	Grass	Tall grass to 1 metre. Flowers appear like clusters of barbed wire, Blue green foliage and red stems make this an attractive grass.				
Ottochloa gracillima	Slender shade grass	Grass	Creeping grass, forms dense mats, prefers partial to full shade				
Themeda triandra	Kangaroo grass	Grass	Grass to 60cm. Produces attractive seed head and fine light green foliage. Benefits from annual prune.				
Fimbristylis dichotoma	Common fringe-rush	Herb	20-40cm Reddish-brown spikelets. Shiny brown nuts.	✔			
Goodenia rotundifolia	A fan flower	Herb	0.3m Yellow flowers with purple throat. Fruit 0.5cm long.				
Olearia nernstii	Native daisy	Herb	To 1.5m tall, white daisy like flowers in spring, suitable for cottage style gardens				
Dianella caerulea	Flax lily, Blue-berry lily	Tussock	Clumping plant to 60cm that spreads by suckers. Produces blue star like flowers followed by bright blue-purple fruit.				
Lomandra longifolia	Long leaved matrush	Tussock plant	Large clumping plant to 1 metre. Produces large spikes of cream highly perfumed flowers.				
Cissus antarctica	Native grape	Vine	Lime green leaves with tendrils, black grape-like fruit, vigorous climber or ground cover				
Eustrephus latifolius	Wombat berry	Vine	Scrambling plant. Produces small pink lily flowers followed by bright orange fruit.				
Geitonoplesium cymosum	Scrambling lily	Vine	Scrambling plant with shiny dark green leaves and wiry stems. Produces white star like flowers followed by black fruit.				

Part 5 - Scribbly Gum - Open Forest - Mainland

Scientific Name	Common Name	Form	Description	Wet	Koala	Salt	Street Tree
Acacia concurrens	Late black wattle	Tree	Short lived wattle to 8m. Prolific flowers in spring.				
Acacia leiocalyx		Tree	Short lived wattle to 8m. Prolific flowers in winter.				
Allocasuarina littoralis	Black she-oak	Tree	10m bright-green 'needle like' foliage, excellent self-mulching				
Alphitonia excelsa	Red ash, Soap tree	Tree	Grows to 15m. Butterfly food plant. Attractive grey bark, black rounded fruit			✓	✓
Angophora leiocarpa	Smooth barked apple	Tree	15-20m interesting branch habit, pink or reddish smooth bark				
Angophora woodsiana	Smudgee	Tree	10-15m large foliage and fruit. Profuse, cream flowers				
Banksia integrifolia	Coastal banksia	Tree	Medium tree to 10 - 15m. Yellow banksia flowers over a long period. Attracts honeyeaters.			✓	✓
Corymbia trachyphloia	Brown bloodwood	Tree	20-25m yellowish brown rough bark				
Eucalyptus fibrosa	Broad-leaved red ironbark	Tree	15-30m White flowers. Dark furrowed bark		✓		
Eucalyptus microcorys	Tallowood	Tree	30-40m fibrous orange-tinged bark, dense crown, prolific flowers		✓		✓
Eucalyptus racemosa	Scribbly gum	Tree	Tall tree to 30m with attractive white bark. Small mallee forms on the Island would be preferred in cultivation.		✓		
Eucalyptus resinifera	Red mahogany	Tree	20-35m White to cream flowers. Elongated buds.		✓		
Eucalyptus seeana	Narrow-leaved red gum	Tree	30m fast growing, attractive pendulous habit.		✓		✓
Eucalyptus siderophloia	Ironbark	Tree	25-30m deeply furrowed grey-black bark		✓		
Eucalyptus tereticornis	QLD Blue gum	Tree	30m smooth bark with white- bluish grey surface	✓	✓		
Ficus coronata	Sandpaper fig	Tree	Tree to 4 metres. Produces large sandpapery leaves and edible fruit. Butterfly food tree. Attracts birds.	✓			
Glochidion ferdinandii	Cheese wood tree	Tree	10m green to red-cheese shaped fruits. Fast growing	✓			
Glochidion sumatranum	Umbrella cheese wood tree/ Button wood	Tree	10m green to red-cheese shaped fruits. Fast growing has umbrella shaped foliage	✓			
Lophostemon confertus	Brush box	Tree	Tall tree to 30m with attractive brown bark.		✓		✓
Lophostemon suaveolens	Swamp mahogany	Tree	20m flaky bark tree with white flowers.	✓	✓		✓
Melaleuca quinquenervia	Paper barked tea-tree	Tree	Trees to 30 metres. White papery bark. Produces masses of creamy white brush flowers in autumn. Excellent nectar producer. Will tolerate dry spells.	✓	✓		✓
Petalostigma pubescens	Quinine bush	Tree	Small tree to 5m with attractive black tessellated bark. Produces yellow fruit.				
Acacia falcata		Shrub	4m slender trunk, cream ball flowers				
Banksia robur	Swamp banksia	Shrub	Large leafed shrub to 2 metres. Produces large green flowers laden with nectar from summer to winter.	✓			
Banksia spinulosa var collina	Golden candles	Shrub	Shrub to 3 metres. Produces large yellow flowers in winter and spring.				
Bursaria spinosa	Sweet bursaria	Shrub	Spiky plant with perfumed white flowers in summer. Good small bird habitat.	✓			
Dodonaea triquetra	Large leaved hop bush	Shrub	Shrub to 2 metres. Produces attractive hop like fruit that are either lime green or purple.				
Elaeocarpus reticulatus	Blueberry ash	Shrub	5-10m attractive green foliage, fragrant white or pink bell-shaped flowers, blue berries			✓	
Hakea florulenta	A hakea	Shrub	1-3.5m Creamy-white flowers. Woody, warty fruit.				
Hibbertia stricta	Erect guinea flower	Shrub	0.3-1.2m Bright yellow flowers, sessile or on stalks.				
Hovea acutifolia	Pointed leaf hovea	Shrub	Dark green leaves, deep violet pea-flowers in August				
Jacksonia scoparia	Dogwood, native broom	Shrub	Needle like leaves, erect or drooping habit, golden yellow flowers				

Schedule 10 - Vegetation Species List

Scientific Name	Common Name	Form	Description	Wet	Koala	Salt	Street Tree
Leptospermum polygalifolium	Wild may	Shrub	Weeping open habit, white open flowers in profusion in late winter				
Melaleuca sieberi	A tea tree	Shrub	6-15m Cream, papery bark. White or pinkish flowers.				
Melastoma affine	Blue-tongue or Native tibochina	Shrub	Shrub to 1,5 metres. Produces large open pink/mauve flowers followed by edible fruit. Responds to pruning.	✔			
Pultenaea villosa	Hairy bush pea	Shrub	Weeping habit, soft leaves, small yellow and red pea-flowers				
Westringia eremicola	Native westringia	Shrub	1.5m White or mauve flowers.				
Xanthorrhoea fulva	Grass tree	Shrub	Tufting plant with a tall flower spike and blue green foliage. Grows in wet areas.	✔			
Commelina cyanea	Native wandering jew	Creeper	Creeper with green shiny leaves and blue flowers, revegetation only, weedy in cultivation				
Hibbertia scandens	Guinea flower, Snake vine	Creeper	Very hardy creeper. Can be pruned and trained as a hedge or shrub. Produces large open yellow flowers.			✔	
Blechnum indicum	Swamp water fern, bungwall fern	Fern	Fern to 80cm. Prefers to grow in water.	✔			
Cymbopogon refractus	Barb-wire grass	Grass	Tall grass to 1 metre. Flowers appear like clusters of barbed wire. Blue green foliage and red stems make this an attractive grass.				
Cyathea cooperi	Tree fern	Fern	Tree fern with large bright green fronds	✔			
Ottochloa gracillima	Slender shade grass	Grass	Creeping grass, forms dense mats, prefers partial to full shade				
Themeda triandra	Kangaroo grass	Grass	Grass to 60cm. Produces attractive seed head and fine light green foliage. Benefits from annual prune.				
Cyperus exaltatus	Tall flat sedge	Herb	0.3-1m. Numerous, congested shiny brown spikelets.	✔			
Fimbristylis cinnamometorum	Fringe-rush	Herb	10-30cm Brown spikelets. White fruits	✔			
Fimbristylis dichotoma	Common fringe-rush	Herb	20-40cm Reddish-brown spikelets. Shiny brown nuts.	✔			
Goodenia rotundifolia	A fan flower	Herb	0.3m Yellow flowers with purple throat. Fruit 0.5cm long.				
Viola hederacea	Native violet	Herb	Ground cover with rounded leaves and white and purple violet flowers. Spreads by runners. Prefers semi shade.				
Juncus usitatus	Common rush	Herb	0.3-1.2m Tussocking perennial with a short, creeping rhizome. Pale brown flowers.	✔			
Gahnia aspera	Red fruited saw-sedge	Sedge	Clumping plant, red-brown shiny fruit				
Chrysocephalum apiculatum	Yellow buttons	Sm. plant	Erect herbaceous plant, bright yellow 'button' flowers				
Dianella caerulea	Flax lily, Blue-berry lily	Tussock	Clumping plant to 60cm that spreads by suckers. Produces blue star like flowers followed by bright blue-purple fruit.				
Lomandra longifolia	Long leaved matrush	Tussock plant	Large clumping plant to 1 metre. Produces large spikes of cream highly perfumed flowers.	✔			
Eustrephus latifolius	Wombat berry	Vine	Scrambling plant. Produces small pink lily flowers followed by bright orange fruit.				
Geitonoplesium cymosum	Scrambling lily	Vine	Scrambling plant with shiny dark green leaves and wiry stems. Produces white star like flowers followed by black fruit.				
Hardenbergia violacea	False sarsaparilla	Vine	Scrambling vine produces a profusion of purple pea flowers in winter-spring.				
Pandorea pandorana	Bower of glory	Vine	Beautiful large white to mauve flowers				
Calochlena dubia	Soft bracken	Fern	Soft foliaged fern				
Cyperus brevifolius		Sedge	Very fast growing tufting sedge				
Oplismenus aemulus	Basket grass	Grass	Perennial trailing grass which roots at nodes, oval leaves				

Part 6 - Scribbly Gum - Open Forest - Southern Moreton Bay Islands

Scientific Name	Common Name	Form	Description	Wet	Koala	Salt	Street Tree
Acacia concurrens	Late black wattle	Tree	Short lived wattle to 8m. Prolific flowers in spring.				
Allocasuarina torulosa	Forest she-oak	Tree	10m weeping foliage, can turn purplish in colour, corky bark				
Alphitonia excelsa	Red ash, Soap tree	Tree	Grows to 15m. Butterfly food plant. Attractive grey bark, black rounded fruit			✓	✓
Angophora leiocarpa	Smooth barked apple	Tree	15-20m interesting branch habit, pink or reddish smooth bark				
Angophora woodsiana	Smudgee	Tree	10-15m large foliage and fruit. Profuse, cream flowers				
Banksia integrifolia	Coastal banksia	Tree	Medium tree to 10 - 15m. Yellow banksia flowers over a long period. Attracts honeyeaters.			✓	✓
Casuarina glauca	Forest she-oak	Tree	10m weeping foliage, can turn purplish in colour, corky bark				
Callitris columellaris	Bribie Island cypress	Tree	Tall dense foliaged tree to 20m.				
Cupaniopsis anacardioides	Tuckeroo	Tree	Excellent shade tree to 10m. Produces large crops of yellow fruit.				✓
Corymbia trachyphloia	Brown bloodwood	Tree	20-25m yellowish brown rough bark				
Corymbia intermedia	Pink bloodwood	Tree	20-30m Tree rough tessellated bark, white/cream flowers.		✓		
Eucalyptus crebra	Narrow-leaved red Ironbark	Tree	20-30m White flowers. Cup-shaped capsules.		✓		
Eucalyptus fibrosa	Broad-leaved red Ironbark	Tree	15-30m White flowers. Dark furrowed bark		✓		
Eucalyptus microcorys	Tallowood	Tree	30-40m fibrous orange-tinged bark, dense crown, prolific flowers		✓		✓
Eucalyptus racemosa	Scribbly gum	Tree	Tall tree to 30m with attractive white bark. Small mallee forms on the Island would be preferred in cultivation.		✓		
Eucalyptus resinifera	Red mahogany	Tree	20-35m White to cream flowers. Elongated buds.		✓		
Eucalyptus siderophloia	Ironbark	Tree	25-30m deeply furrowed grey-black bark		✓		
Eucalyptus tereticornis	QLD Blue gum	Tree	30m smooth bark with white- bluish grey surface	✓	✓		
Ficus obliqua	Small leafed Moreton Bay fig	Tree	15-35m Strangling and aerial roots absent. Yellow to orange, globular fruit				
Glochidion ferdinandii	Cheese wood tree	Tree	10m green to red-cheese shaped fruits. Fast growing	✓			
Glochidion sumatranum	Umbrella cheese wood tree/ Button wood	Tree	10m green to red-cheese shaped fruits. Fast growing has umbrella shaped foliage	✓			
Lophostemon confertus	Brush box	Tree	Tall tree to 30m with attractive brown bark.		✓		✓
Lophostemon suaveolens	Swamp mahogany	Tree	20m flaky bark tree with white flowers.	✓	✓		✓
Melaleuca quinquenervia	Paper barked tea-tree	Tree	Trees to 30 metres. White papery bark. Produces masses of creamy white brush flowers in autumn. Excellent nectar producer. Will tolerate dry spells.	✓	✓		✓
Petalostigma pubescens	Quinine bush	Tree	Small tree to 5m with attractive black tessellated bark. Produces yellow fruit.				
Acacia falcata		Shrub	4m slender trunk, cream ball flowers				
Banksia robur	Swamp banksia	Shrub	Large leafed shrub to 2 metres. Produces large green flowers laden with nectar from summer to winter.	✓			
Bursaria spinosa	Sweet bursaria	Shrub	Spiky plant with perfumed white flowers in summer. Good small bird habitat.	✓			
Clerodendrum floribundum	Lolly bush	Shrub	4-5m large rounded leaves, white fragrant flowers, colourful fruit				
Dodonaea triquetra	Large leaved hop bush	Shrub	Shrub to 2 metres. Produces attractive hop like fruit that are either green or purple.				
Elaeocarpus reticulatus	Blueberry ash	Shrub	5-10m attractive green foliage, fragrant white or pink bell-shaped flowers, blue berries			✓	
Hakea florulenta	A hakea	Shrub	1-3.5m Creamy-white flowers. Woody, warty fruit.				
Hibbertia stricta	Erect guinea flower	Shrub	0.3-1.2m Bright yellow flowers, sessile or on stalks.				
Hovea acutifolia	Pointed leaf hovea	Shrub	Dark green leaves, deep violet pea-flowers				

Schedule 10 - Vegetation Species List

Scientific Name	Common Name	Form	Description	Wet	Koala	Salt	Street Tree
			in August				
Jacksonia scoparia	Dogwood, native broom	Shrub	Needle like leaves, erect or drooping habit, golden yellow flowers				
Leptospermum polygalifolium	Wild may	Shrub	Weeping open habit, white open flowers in profusion in late winter				
Melaleuca sieberi	A tea tree	Shrub	6-15m Cream, papery bark. White or pinkish flowers.				
Melastoma affine	Blue-tongue or Native tibochina	Shrub	Shrub to 1,5 metres. Produces large open pink/mauve flowers followed by edible fruit. Responds to pruning.	✔			
Pultenaea retusa	A bush pea	Shrub	1-2m flowers yellow late winter early spring				
Xanthorrhoea fulva	Grass tree	Shrub	Tufting plant with a tall flower spike and blue green foliage. Grows in wet areas.	✔			
Commelina cyanea	Native wandering jew	Creeper	Creeper with green shiny leaves and blue flowers, revegetation only, weedy in cultivation				
Hibbertia scandens	Guinea flower, Snake vine	Creeper	Very hardy creeper. Can be pruned and trained as a hedge or shrub. Produces large open yellow flowers.			✔	
Blechnum indicum	Swamp water fern	Fern	Fern to 80cm. Prefers to grow in water.	✔			
Cymbopogon refractus	Barb-wire grass	Grass	Tall grass to 1 metre. Flowers appear like clusters of barbed wire. Blue green foliage and red stems make this an attractive grass.				
Ottochloa gracillima	Slender shade grass	Grass	Creeping grass, forms dense mats, prefers partial to full shade				
Themeda triandra	Kangaroo grass	Grass	Grass to 60cm. Produces attractive seed head and fine light green foliage. Benefits from annual prune.				
Fimbristylis dichotoma	Common fringe-rush	Herb	20-40cm Reddish-brown spikelets. Shiny brown nuts.	✔			
Goodenia rotundifolia	A fan flower	Herb	0.3m Yellow flowers with purple throat. Fruit 0.5cm long.				
Juncus usitatus	Common rush	Herb	0.3-1.2m Tussocking perennial with a short, creeping rhizome. Pale brown flowers.	✔			
Viola hederacea	Native violet	Herb	Ground cover with rounded leaves and white and purple violet flowers. Spreads by runners. Prefers semi shade				
Gahnia aspera	Red fruited saw-sedge	Sedge	Clumping plant, red-brown shiny fruit				
Chrysocephalum apiculatum	Yellow buttons	Sm. plant	Erect herbaceous plant, bright yellow 'button' flowers				
Dianella caerulea	Flax lily, Blue-berry lily	Tussock	Clumping plant to 60cm that spreads by suckers. Produces blue star like flowers followed by bright blue-purple fruit.				
Dianella brevipedunculata	A flax lily	Tussock	Tufting plant in lily family, with tiny blue star like flowers and blue berries			✔	
Lomandra longifolia	Long leaved matrush	Tussock plant	Large clumping plant to 1 metre. Produces large spikes of cream highly perfumed flowers.	✔			
Eustrephus latifolius	Wombat berry	Vine	Scrambling plant. Produces small pink lily flowers followed by bright orange fruit.				
Cissus hypoglauca	Native grape	Vine	Lime green leaves with tendrils, black grape-like fruit, vigorous climber or ground cover				
Geitonoplesium cymosum	Scrambling lily	Vine	Scrambling plant with shiny dark green leaves and wiry stems. Produces white star like flowers followed by black fruit.				
Hardenbergia violacea	False sarsaparilla	Vine	Scrambling vine produces a profusion of purple pea flowers in winter-spring.				
Pandorea pandorana	Bower of glory	Vine	Beautiful large white to mauve flowers				
Calochlena dubia	Soft bracken	Fern	Soft foliaged fern				
Cyperus brevifolius		Sedge	Very fast growing tufting sedge				
Oplismenus aemulus	Basket grass	Grass	Perennial trailing grass which roots at nodes, oval leaves				

Part 7 - Queensland Blue Gum Forest/Melaleuca Wetlands - Mainland

Scientific Name	Common Name	Form	Description	Wet	Koala	Salt	Street Tree
Acacia leiocalyx		Tree	Short lived wattle to 8m. Prolific flowers in winter.				
Acmena smithii	Lily pilly	Tree	Medium sized tree to 20m new pink growth, white flowers in summer followed by pink edible fruit.	✔			
Allocasuarina littoralis	Black she-oak	Tree	10m bright-green 'needle like' foliage, excellent self-mulching				
Alphitonia excelsa	Red ash, Soap tree	Tree	Grows to 15m. Butterfly food plant. Attractive grey bark, black rounded fruit				✔
Angophora leiocarpa	Smooth barked apple	Tree	15-20m interesting branch habit, pink or reddish smooth bark				
Callistemon salignus	Red tips	Tree	Red new growth, cream brush flowers with papery bark	✔			
Casuarina glauca	Swamp she-oak	Tree	Upright tree to 20 metres. Grows naturally behind mangroves but tolerates dry conditions.	✔			
Commersonia tomentosa		Tree	Smaller commersonia with soft leaves, brown underside				
Cryptocarya microneura	Murrogun	Tree	10-15m Native laurel with lush green leaves, slow growing	✔			
Cupaniopsis anacardioides	Tuckeroo	Tree	Excellent shade tree to 10m. Produces large crops of yellow fruit.				✔
Eucalyptus seeana	Narrow-leaved red gum	Tree	30m fast growing, attractive pendulous habit.		✔		✔
Eucalyptus siderophloia	Ironbark	Tree	25-30m deeply furrowed grey-black bark		✔		
Eucalyptus tereticornis	QLD Blue gum	Tree	30m smooth bark with white- bluish grey surface	✔	✔		✔
Ficus coronata	Sandpaper fig	Tree	Tree to 4 metres. Produces large sandpapery leaves and edible fruit. Butterfly food tree. Attracts birds.	✔			
Glochidion sumatranum	Umbrella Cheese wood tree/ Button wood	Tree	10m green to red-cheese shaped fruits. Fast growing has umbrella shaped foliage	✔			
Jagera pseudorhus	Foam bark	Tree	Feathery foliage with hairy fruit. Take care not to plant over walkways due to irritable hairs on fruit				
Lophostemon confertus	Brush box	Tree	Tall tree to 30m with attractive brown bark.		✔		
Lophostemon suaveolens	Swamp mahogany	Tree	20m flaky bark tree with white flowers.	✔	✔		✔
Mallotus philippensis	Red kamala	Tree	17m attractive green foliage, masses of red fruit				
Melaleuca quinquenervia	Paper barked tea-tree	Tree	Trees to 30 metres. White papery bark. Produces masses of creamy white brush flowers in autumn. Excellent nectar producer. Will tolerate dry spells.	✔	✔		✔
Polyscias elegans	Celery wood	Tree	15-20m umbrella shaped crown, narrow canopy palm like in outline	✔			
Acacia falcata		Shrub	4m slender trunk, cream ball flowers				
Acacia perangusta	Eprapah wattle	Shrub	Fine leaved wattle with prolific yellow flowers				
Callistemon pachyphyllus	Swamp bottle brush	Shrub	Bottlebrush to 1.5 metres. Produces bright red or green brushes in spring and often throughout the year. Responds to pruning.	✔			
Banksia robur	Swamp banksia	Shrub	Large leaved shrub to 2 metres. Produces large green flowers laden with nectar from summer to winter.	✔			
Dodonaea triquetra	Large leaved hop bush	Shrub	Shrub to 2 metres. Produces attractive hop like fruit that are either lime green or purple.				
Jacksonia scoparia	Dogwood, native broom	Shrub	Needle like leaves, erect or drooping habit, golden yellow flowers				
Leptospermum polygalifolium	Wild may	Shrub	Weeping open habit, white open flowers in profusion in late winter				
Melaleuca linarifolia	Paper barked tea-tree	Shrub	Dense fine foliage, masses of white brush flowers in late spring	✔			
Melaleuca thymifolia		Shrub	Mauve flowers, 80cm				
Melastoma affine	Blue-tongue or Native tibochina	Shrub	Shrub to 1,5 metres. Produces large open pink/mauve flowers followed by edible fruit. Responds to pruning.	✔			
Pittosporum revolutum	Yellow Pittosporum	Shrub	2.5m prolific pale yellow flowers, colourful yellow-orange fruits				
Myoporum acuminatum	Creeping boobialla	Creeper	Ground cover. Produces small white flowers followed by blue berries.			✔	

Schedule 10 - Vegetation Species List

Scientific Name	Common Name	Form	Description	Wet	Koala	Salt	Street Tree
Hypolepis muelleri	Harsh ground fern	Fern	0.5-2.5m long. Rootstock covered with reddish brown hairs. Dark green fronds				
Blechnum indicum	Swamp water fern, Bungwall fern	Fern	Fern to 80cm. Prefers to grow in water.	✔			
Dianella brevipedunculata	A flax lily	Forb	Tufting plant in lily family, with tiny blue star like flowers and blue berries			✔	
Ottochloa gracillima	Slender shade grass	Grass	Creeping grass, forms dense mats, prefers partial to full shade				
Themeda triandra	Kangaroo grass	Grass	Grass to 60cm. Produces attractive seed head and fine light green foliage. Benefits from annual prune.				
Baumea articulata	Jointed twig rush	Herb	1-2m sedge. Stout, cylindrical leaves. Nut 0.5cm long	✔			
Juncus usitatus	Common rush	Herb	0.3-1.2m Tussocking perennial. Pale brown flowers.	✔			
Gahnia aspera	Red fruited saw-sedge	Sedge	Clumping plant, red-brown shiny fruit				
Isolepis nodosa	A sedge	Sedge	Thin leaved tufting to 1m.	✔			
Lepironia articulata	A sedge	Sedge	Attractive clumping plant with blue green foliage to 1 metre.	✔			
Lomandra longifolia	Long leaved matrush	Tussock plant	Large clumping plant to 1 metre. Produces large spikes of cream highly perfumed flowers.	✔			
Eustrephus latifolius	Wombat berry	Vine	Scrambling plant. Produces small pink lily flowers followed by bright orange fruit.				
Geitonoplesium cymosum	Scrambling lily	Vine	Scrambling plant with shiny dark green leaves and wiry stems. Produces white star like flowers followed by black fruit.				
Jasminium simplicifolium	Native jasmine vine	Vine	Low growing shrub-screening plant with white perfumed flowers.				

Part 8 - Littoral Rainforest/Open Forest - Mainland and Southern Moreton Bay Islands

Scientific Name	Common Name	Form	Description	Wet	Koala	Salt	Street Trees
Acacia concurrens	Brisbane black wattle	Tree	Short lived wattle to 8m. Prolific flowers in spring.				
Araucaria cunninghamii	Hoop pine	Tree	50m large stately tree pyramid shaped, prickly foliage				
Alphitonia excelsa	Red ash, Soap tree	Tree	Grows to 15m. Butterfly food plant. Attractive grey bark, black rounded fruit				✔
Banksia integrifolia	Coast banksia	Tree	Medium tree to 10 - 15m. Yellow banksia flowers over a long period. Attracts honeyeaters.			✔	✔
Callitris columellaris	Bribie Island cypress, White cypress	Tree	Tall dense foliaged tree to 20m.			✔	
Clerodendrum tomentosum		Tree	Large shrub or small tree 7m white flowers.				
Corymbia intermedia	Pink bloodwood	Tree	20-30m Tree rough tessellated bark, white/cream flowers.		✔		
Cupaniopsis anacardioides	Tuckeroo	Tree	Excellent shade tree to 10m. Produces large crops of yellow fruit.			✔	✔
Elaeocarpus obovatus	Blueberry ash	Tree	15-25m grey bark. Cream to white flowers.			✔	
Elaeocarpus reticulatus	Blueberry ash	Tree	5-10m attractive green foliage, fragrant white or pink bell-shaped flowers, blue berries				✔
Eucalyptus siderophloia	Ironbark	Tree	25-30m deeply furrowed grey-black bark		✔		
Eucalyptus tereticornis	QLD Blue gum	Tree	30m smooth bark with white- bluish grey surface	✔	✔		✔
Ficus macrophylla	Moreton Bay fig	Tree	Very large tree with spreading canopy and large leaves			✔	
Ficus platypoda	Fig	Tree	Smaller fig tree, nice foliage				
Flindersia australis	Crows ash	Tree	20-30m white flowers, distinctive fruit, large rounded crown	✔			✔
Glochidion ferdinandii	Cheese wood tree	Tree	10m green to red-cheese shaped fruits. Fast growing				
Grevillia robusta	Silky oak	Tree	Tall tree to 30m with masses of golden flowers				
Harpullia hilli	Tulipwood	Tree	7m black seed enclosed in red aril.				
Harpullia pendula	Tulipwood	Tree	10-15m orange flowers and fruit				✔
Hibiscus tiliaceus	Cotton tree	Tree	Large spreading densely foliaged tree to 5m. Produces large yellow hibiscus flowers.			✔	
Hymenosporum flavum	Native frangipanni	Tree	15m strong perfumed yellow flowers				
Jagera pseudorhus	Foam bark	Tree	Feathery foliage with hairy fruit. Take care not to plant over walkways due to irritable hairs on fruit				
Lophostemon confertus	Brush box	Tree	Tall tree to 30m with attractive brown bark.		✔		
Macaranga tanarius	Macaranga	Tree	Dense spreading tree to 8 metres. Produces large rounded leaves.				
Melaleuca quinquenervia	Paper barked tea-tree	Tree	Trees to 30 metres. White papery bark. Produces masses of creamy white brush flowers in autumn. Excellent nectar producer. Will tolerate dry spells.	✔	✔		✔
Mallotus philippensis	Red kamala	Tree	17m attractive green foliage, masses of red fruit				
Melia azederach	White cedar	Tree	17m deciduous ferny foliage, white/purple flowers, yellow fruit				
Rapanea variabilis	Muttonwood	Tree	6m Small cream flowers. Globular blue fruit.				
Tristaniopsis laurina	Water gum	Tree	7m Ornamental shade tree with yellow flowers in spring				✔
Alectryon connatus	Beach bird eye	Shrub	6m tall bushy shrub, attractive fruits			✔	
Alpinia caerulea	Native ginger	Shrub	Long strap like leaves, blue fruit	✔			
Breynia oblongifolia	Coffee bush	Shrub	2m with small round leaves. May be difficult to source.				
Clerodendrum floribundum	Lolly bush	Shrub	4-5m large rounded leaves, white fragrant flowers, colourful fruit				
Dodonaea triquetra	Large leaved hop bush	Shrub	Shrub to 2 metres. Produces attractive hop like fruit that are either lime green or purple.				
Ficus fraseri	Sandpaper fig	Shrub	10m. Sandpaper leaves, attracts birds	✔			
Ozothamnus diosmifolius	Sago bush	Shrub	Small white to pink paper daisies, fine foliage, very fast growing				
Pittosporum revolutum	Yellow pittosporum	Shrub	2.5m prolific pale yellow flowers, colourful yellow-orange fruits				
Vitex trifolia	Vitex	Shrub	Shrub to 3 metres. Produces head of blue				

Schedule 10 - Vegetation Species List

Scientific Name	Common Name	Form	Description	Wet	Koala	Salt	Street Trees
			flowers followed by black fruit. Responds to pruning.				
Austromyrtus dulcis	Midyim berry	Ground cover	Ground cover with bright pink new leaves and edible berries			✔	
Hibbertia scandens	Guinea flower, snake vine	Creeper	Very hardy creeper. Can be pruned and trained as a hedge or shrub. Produces large open yellow flowers.			✔	
Myoporum acuminatum	Creeping boobialla	Creeper	Ground cover. Produces small white flowers followed by blue berries.			✔	
Cyathea cooperi	Tree fern	Fern	Tree fern with large bright green fronds	✔			
Cymbopogon refractus	Barb-wire grass	Grass	Tall grass to 1 metre. Flowers appear like clusters of barbed wire, Blue green foliage and red stems make this an attractive grass.				
Oplismenus aemulus	Basket grass	Grass	Perennial trailing grass which roots at nodes, oval leaves				
Ottochloa gracillima	Slender shade grass	Grass	Creeping grass, forms dense mats, prefers partial to full shade				
Themeda triandra	Kangaroo grass	Grass	Grass to 60cm. Produces attractive seed head and fine light green foliage. Benefits from annual prune.				
Juncus usitatus	Common rush	Herb	0.3-1.2m Tussocking perennial with a short, creeping rhizome. Pale brown flowers.	✔			
Tripladenia cunninghamii	Wire lily	Herb	Wiry stems and broads leaves, semi shade has pale pink flowers				
Viola hederacea	Native violet	Herb	Ground cover with rounded leaves and white and purple violet flowers. Spreads by runners. Prefers semi shade				
Chrysocephalum apiculatum	Yellow buttons	Sm. plant	Erect herbaceous plant, bright yellow 'button' flowers				
Cordyline petiolaris	Palm lily	Tufting	Up to 5m stems, flowers white, fruits red				
Cordyline stricta	Palm lily	Tufting	3-4m Large sprays of red fruit.				
Cordyline rubra	Palm lily	Tufting	2-4m Forms sparse clumps of a few stems. Backs of Lilac flowers. Globular, red berries.				
Dianella caerulea	Flax lily, Blue-berry lily	Tussock	Clumping plant to 60cm that spreads by suckers. Produces blue star like flowers followed by bright blue-purple fruit.				
Lomandra hystrix	Long leaved matrush	Tussock	Large clumping plant to 1 metre. Produces cream perfumed flowers. Suitable for wet areas.	✔			
Lomandra longifolia	Long leaved matrush	Tussock	Large clumping plant to 1 metre. Produces large spikes of cream highly perfumed flowers.	✔			
Cissus antarctica	Native grape	Vine	Lime green leaves with tendrils, black grape-like fruit, vigorous climber or ground cover				
Milletia megasperma	Native wisteria	Vine	Very vigorous vine with purple/white flowers				
Pandorea pandorana	Bower of glory	Vine	Beautiful large white to mauve flowers				
Crinum pedunculatum	Crinum lily	Lily	Lily to 1 metre. Produces clusters of large white perfumes lily flowers. Hardy in a wide range of conditions.	✔		✔	

Part 9 - Swamp She-Oak Forest - Mainland

Scientific Name	Common Name	Form	Description	Wet	Koala	Salt	Street Tree
Acacia leiocalyx		Tree	Short lived wattle to 8m. Prolific flowers in winter.				
Acacia melanoxylon	Blackwood	Tree	15m wattle pale yellow flowers				
Allocasuarina littoralis	Black she-oak	Tree	10m bright-green 'needle like' foliage, excellent self-mulching				
Alphitonia excelsa	Red ash, Soap tree	Tree	Grows to 15m. Butterfly food plant. Attractive grey bark, black rounded fruit				✔
Angophora woodsiana	Smudgee, Rough barked apple gum	Tree	10-15m large foliage and fruit. Profuse, cream flowers				
Banksia integrifolia	Coastal banksia	Tree	Medium tree to 10 - 15m. Yellow banksia flowers over a long period. Attracts honeyeaters.				✔
Casuarina glauca	Swamp she-oak	Tree	Upright tree to 20 metres. Grows naturally behind mangroves but tolerates dry conditions.	✔		✔	
Corymbia intermedia	Pink bloodwood	Tree	20-30m Tree rough tessellated bark, white/cream flowers.		✔		
Eucalyptus robusta	Swamp mahogany	Tree	20m glossy green foliage with creamy yellow flowers in spring		✔		
Eucalyptus seeana	Narrow-leaved red gum	Tree	30m fast growing, attractive pendulous habit.		✔		✔
Eucalyptus siderophloia	Ironbark	Tree	25-30m deeply furrowed grey-black bark		✔		
Eucalyptus tereticornis	QLD Blue gum	Tree	30m smooth bark with white- bluish grey surface	✔	✔		✔
Glochidion ferdinandii	Cheese wood tree	Tree	10m green to red-cheese shaped fruits. Fast growing	✔			
Lophostemon suaveolens	Swamp mahogany	Tree	20m flaky bark tree with white flowers.	✔	✔		✔
Melaleuca quinquenervia	Paper barked tea-tree	Tree	Trees to 30 metres. White papery bark. Produces masses of creamy white brush flowers in autumn. Excellent nectar producer. Will tolerate dry spells.	✔	✔		✔
Acacia maidenii	Maiden's wattle	Shrub	5-15m fine foliage. Pale yellow flowers.				
Breynia oblongifolia	Coffee bush	Shrub	2m with small round leaves. May be difficult to source.				
Leptospermum polygalifolium	Wild may	Shrub	Weeping open habit, white open flowers in profusion in late winter				
Pultenaea paleacea	A bush pea	Shrub	2m with bright yellow/orange flowers				
Glycine clandestina	Native glycine	Creeper	Narrow leaved climber with pink flowers				
Acrostichum speciosum	Mangrove fern	Fern	Large attractive fern specifically adapted to salt conditions	✔		✔	
Dianella brevipedunculata	A flax lily	Forb	Tufting plant in lily family, with tiny blue star like flowers and blue berries				
Ottochloa gracillima	Slender shade grass	Grass	Creeping grass, forms dense mats, prefers partial to full shade				
Fimbristylis cinnamometorum	Fringe-rush	Herb	10-30cm Brown spikelets. White fruits	✔			
Sesuvium portulacastrum	Sea purslane	Herb	Ground cover with pink flowers found in salt influenced areas.				
Tetragonia tetragonioides	New Zealand spinach	Herb	Bright green salt tolerant groundcover with edible leaves	✔		✔	
Viola hederacea	Native violet	Herb	Ground cover with rounded leaves and white and purple violet flowers. Spreads by runners. Prefers semi shade	✔			
Philydrum lanuginosum	Frogs mouth	Sedge	Fleshly leaved sedge with yellow open flowers	✔			
Portulaca australis	Pigweed	Herb	Coastal groundcover with succulent leaves and pink flowers	✔		✔	
Dianella caerulea	Flax lily, Blue-berry lily	Tussock	Clumping plant to 60cm that spreads by suckers. Produces blue star like flowers followed by bright blue-purple fruit.				
Lomandra longifolia	Long leaved matrush	Tussock	Large clumping plant to 1 metre. Produces large spikes of cream highly perfumed flowers.	✔			
Cissus antarctica	Native grape	Vine	Lime green leaves with tendrils, black grape-like fruit, vigorous climber or ground cover				

Scientific Name	Common Name	Form	Description	Wet	Koala	Salt	Street Tree
Cissus hypoglauca	Native grape	Vine	Lime green leaves with tendrils, black grape-like fruit, vigorous climber or ground cover				
Eustrephus latifolius	Wombat berry	Vine	Scrambling plant. Produces small pink lily flowers followed by bright orange fruit.				
Geitonoplesium cymosum	Scrambling lily	Vine	Scrambling plant with shiny dark green leaves and wiry stems. Produces white star like flowers followed by black fruit.				
Kennedia rubicunda	Dusky coral pea	Vine	Vigorous vine which has prolific red Sturt's desert pea like flowers				
Lepironia articulata	A sedge	Sedge	Clumping plant with blue green foliage to 1 metre.	✔			
Myoporum acuminatum	Creeping boobialla	Creeper	Ground cover. Produces small white flowers followed by blue berries.				

Part 10 - Brushbox/Banksia Woodland/Headland Vegetation - NSI - Point Lookout Area

Scientific Name	Common Name	Form	Description	Wet	Koala	Salt	Street Trees
Acacia aulacocarpa	Hickory wattle	Tree	Short lived wattle to 8m. Prolific flowers in March.				
Acacia concurrens	Late black wattle	Tree	Short lived wattle to 8m. Prolific flowers in spring.				
Alphitonia excelsa	Red ash, soap tree	Tree	Grows to 15m. Butterfly food plant.				✔
Archontophoenix cunninghamiana	Bangalow/piccabeen palm,	Palm tree	Tall palm prefers shelter especially from salt winds. Produces large clusters of small red fruit.				
Banksia integrifolia	Coast banksia	Tree	Medium tree to 10 - 15m. Yellow banksia flowers over a long period. Attracts honeyeaters.				✔
Banksia serrata	Old man banksia	Tree	Small tree to 8m. Large cream banksia flowers attract honeyeaters.				✔
Callitris columellaris	Bribie Island/white cypress,	Tree	Tall dense foliaged tree to 20m.			✔	
Callitris rhomboidea	Cypress pine	Tree	Dense foliaged tree to 12m.			✔	
Casuarina equisetifolia	Coast she-oak	Tree	Small to medium tree to 6m. Weeping grey-green foliage. Excellent wind break.				
Casuarina glauca	Swamp she-oak	Tree	Upright tree to 20 metres. Grows naturally behind mangroves but tolerates dry conditions.	✔		✔	
Commersonia bartramia	Brown kurrajong	Tree	Small shade tree to 6 metres. Produces a mass of small white flowers.				
Cupaniopsis anacardioides	Tuckeroo	Tree	Excellent shade tree to 10m. Produces large crops of yellow fruit.				✔
Elaeocarpus reticulatus	Blueberry ash	Tree	5-10m attractive green foliage, fragrant white or pink bell-shaped flowers, blue berries			✔	✔
Eucalyptus pilularis	Blackbutt	Tree	Tall eucalypt to 30m. Small mallee forms on the Island would be preferred in cultivation.				
Eucalyptus racemosa	Scribbly gum	Tree	Tall tree to 30m with attractive white bark. Small mallee forms on the Island would be preferred in cultivation.		✔		
Ficus coronata	Sandpaper fig	Tree	Tree to 4 metres. Produces large sandpapery leaves and edible fruit. Butterfly food tree. Attracts birds.	✔			
Hibiscus tiliaceus	Cotton tree	Tree	Large spreading densely foliaged tree to 5m. Produces large yellow hibiscus flowers.			✔	
Glochidion ferdinandii	Cheese wood tree	Tree	10 metres green to red-cheese shaped fruits. Fast growing	✔			
Livistona australis	Cabbage-tree palm	Tree	Large palm with fan shaped leaves.	✔			
Lophostemon confertus	Brush box	Tree	Tall tree to 30m with attractive white bark. Small mallee forms on the Island would be preferred in cultivation.		✔		✔
Macaranga tanarius	Macaranga	Tree	Dense spreading tree to 8 metres. Produces large rounded leaves.				
Melaleuca quinquenervia	Paper barked tea-tree	Tree	Trees to 30 metres. White papery bark. Produces masses of creamy white brush flowers in autumn. Excellent nectar producer. Will tolerate dry spells.	✔	✔		✔
Pandanus pedunculatus	Pandanus palm, screw palm	Tree	Tree to 4m. Produces large palm like leaves and large orange fruit similar to a pineapple in appearance. Trees should be sourced on the Island to avoid the introduction of a serious pest that attracts this plant.			✔	
Petalostigma pubescens	Quinine bush	Tree	Small tree to 5m with attractive black tessellated bark. Produces yellow fruit.				
Acacia leiocalyx		Shrub	Short lived wattle to 8m. Prolific flowers in winter.				
Acacia sophorae	Coastal acacia	Shrub	Wattle to 1 metre. Produces bright yellow flower spikes in late winter/spring.			✔	
Austromyrtus dulcis	Midyim	Shrub	Shrub to 1 metre. Produces white fluffy flowers in November followed by edible fruit. Responds well to pruning and tolerates shade.			✔	
Banksia aemula	Wallum	Shrub	Small tree to 6m. Large cream banksia flowers attract honeyeaters.	✔			
Banksia oblongifolia	Dwarf banksia	Shrub	Shrub to 1 metre. Produces yellow nectar laden flowers in autumn.				
Banksia robur	Swamp banksia	Shrub	Large leaved shrub to 2 metres. Produces large green flowers laden with nectar from summer to winter.	✔			

Schedule 10 - Vegetation Species List

Scientific Name	Common Name	Form	Description	Wet	Koala	Salt	Street Trees
Banksia spinulosa	Golden candles	Shrub	Shrub to 3 metres. Produces large yellow flowers in winter and spring.	✔			
Callistemon pachyphyllus	Swamp bottle brush	Shrub	Bottlebrush to 1.5 metres. Produces bright red brushes in spring and often throughout the year. Responds to pruning.				
Dodonaea triquetra	Large leaved hop bush	Shrub	Shrub to 2 metres. Produces attractive hop like fruit that are either lime green or purple.				
Leptospermum polygalifolium	Wild may	Shrub	Shrub to 4 metres. Produces a mass of small white flowers in spring.				
Leptospermum liversidgei	Wild may	Shrub	Shrub to 1 metre. Does not thrive in dry conditions. Lemon scented foliage. Masses of white sometimes pink flowers in summer.				
Melaleuca nodosa	Prickly-leaved paperbark	Shrub	Small tree to 4m with papery bark. Produces a dense crown in wet areas. A profusion of small fluffy yellow flowers in spring. Bird attracting.				
Melastoma affine	Blue-tongue or Native tibochina	Shrub	Shrub to 1,5 metres. Produces large open pink/mauve flowers followed by edible fruit. Responds to pruning.	✔			
Jacksonia stackhousii	Dogwood	Shrub	Fine foliage with bright yellow foliage				
Petrophila shirleyae	Cone sticks	Shrub	Shrub to 1m firm leaves with cone shaped fruit				
Podocarpus spinulosus	Native plum	Shrub	Shrub to 1 metre. Produces dark green dense foliage.				
Ricinocarpus pinifolius	Wedding bush	Shrub	Shrub to 2 metres. Produces a mass of white flowers. Spectacular flowering shrub.				
Vitex trifolia	Vitex	Shrub	Shrub to 3 metres. Produces head of blue flowers followed by black fruit. Responds to pruning.				
Xanthorrhoea fulva	Grass tree	Shrub	Tufting plant with a tall flower spike and blue green foliage. Grows in wet areas.				
Austromyrtus dulcis	Midyim berry	Ground cover	Ground cover with bright pink new leaves and edible berries			✔	
Carpobrotus glaucescens	Pigs face	Creeper	Sand binding succulent ground cover. Produces large bright pink flowers throughout the year, followed by edible fruit.			✔	
Restio tetraphyllus	Feather plant	Creeping plant	Fern like foliage	✔			
Hibbertia scandens	Guinea flower, Snake vine	Creeping plant	Very hardy creeper. Can be pruned and trained as a hedge or shrub. Produces large open yellow flowers.			✔	
Ipomoea pes-caprae subsp. Brasiliensis	Goat's foot convolvulus	Creeping plant	Rampant sand binding creeper with large leaves. Produces large trumpet shaped pink flowers.			✔	
Myoporum acuminatum	Creeping boobialla	Creeping plant	Ground cover. Produces small white flowers followed by blue berries.				
Geitonoplesium cymosum	Scrambling lily	Vine	Scrambling plant with shiny dark green leaves. Produces white star like flowers followed by black fruit.				
Hardenbergia violacea	False sarsaparilla	Vine	Scrambling vine produces a profusion of purple pea flowers in winter-spring.				
Eustrephus latifolius	Wombat berry	Vine	Scrambling plant. Produces small pink lily flowers followed by bright orange fruit.				
Carex appresa	Tall sedge	Tussock	Tufting plant to 60cm. Prefers to grow in wet conditions but tolerates sun.	✔			
Dianella caerulea	Flax lily, blue-berry lily	Tussock	Clumping plant to 60cm that spreads by suckers. Produces blue star like flowers followed by bright blue-purple fruit.			✔	
Dianella congesta	Coastal flax lily	Tussock	Clumping plant to 30cm. Produces blue star like flowers followed by large edible dark blue fruit. Grows naturally on sand dunes.			✔	
Gahnia sieberana	Sword grass	Tussock	Tall sedge to 1.5 metres. Produces tall heads of brown flowers with bright red seeds.	✔			
Lomandra longifolia	Long leaved matrush	Tussock plant	Large clumping plant to 1 metre. Produces large spikes of cream highly perfumed flowers.	✔			
Cymbopogon refractus	Barb-wire grass	Grass	Tall grass to 1 metre. Flowers appear like clusters of barbed wire, Blue green foliage and red stems make this an attractive grass.				
Spinifex hirsutus	Hairy spinifex	Grass	Trailing grass with light green leaves suitable for sand area			✔	
Themeda triandra	Kangaroo grass	Grass	Grass to 60cm. Produces attractive seed head and fine light green foliage. Benefits				

Scientific Name	Common Name	Form	Description	Wet	Koala	Salt	Street Trees
			from annual prune.				
Adiantum aethiopicum	Maiden-hair fern	Fern	Small fern with round leaves. Prefers shady moist conditions.	✔			
Blechnum indicum	Swamp water fern, Bungwall fern	Fern	Fern to 80cm. Prefers to grow in water.	✔			
Lepironia articulata	A sedge	Sedge	Clumping plant with blue green foliage to 1 metre.				
Chrysocephalum apiculatum	Yellow buttons	Herb	Erect herbaceous plant, bright yellow 'button' flowers				
Scaevola calendulacea	Dune fan flower	Herb	Ground cover that produces blue fan shaped flowers followed by purple fruit. Grows naturally on dunes.			✔	
Viola hederacea	Native violet	Herb	Ground cover with rounded leaves and white and purple Violet flowers. Spreads by runners.				
Bracteanthe bracteatum	Paper daisy	Small plant	Small annual plant produces bright yellow papery daisies. Local form not available but nursery hybrids such as Dargan Hill Monarch would be suitable.			✔	
Crinum pedunculatum	Crinum lily	Lily	Lily to 1 metre. Produces clusters of large white perfumes lily flowers. Hardy in a wide range of conditions.	✔		✔	

Part 11 - Bloodwood/Bribie Island Pine Forest - North Stradbroke Island - Amity Point

Scientific Name	Common Name	Form	Description	Wet	Koala	Salt	Street Trees
Acmena smithii	Lily pilly	Tree	Medium sized tree to 20m new pink growth, white flowers in summer followed by pink edible fruit.				
Alphitonia excelsa	Red ash, soap tree	Tree	Grows to 15m. Butterfly food plant. Attractive grey bark, black rounded fruit				✔
Banksia integrifolia	Coastal banksia	Tree	Medium tree to 10 - 15m. Yellow banksia flowers over a long period. Attracts honeyeaters.			✔	✔
Callitris columellaris	Bribie Island cypress	Tree	Tall dense foliaged tree to 20m.			✔	
Casuarina glauca	Forest she-oak	Tree	10m weeping foliage, can turn purplish in colour, corky bark				
Cupaniopsis anacardioides	Tuckeroo	Tree	Excellent shade tree to 10m. Produces large crops of yellow fruit.				✔
Corymbia intermedia	Pink bloodwood	Tree	20-30m Tree rough tessellated bark, white/cream flowers.		✔		
Eucalyptus microcorys	Tallowood	Tree	30-40m fibrous orange-tinged bark, dense crown, prolific flowers		✔		✔
Eucalyptus robusta	Swamp mahogany	Tree	20m glossy green foliage with creamy yellow flowers in spring		✔		
Eucalyptus tereticornis	QLD Blue gum	Tree	30m smooth bark with white-bluish grey surface	✔	✔		✔
Glochidion ferdinandii	Cheese wood tree	Tree	10m green to red-cheese shaped fruits. Fast growing				
Glochidion sumatranum	Umbrella cheese wood tree/ Button wood	Tree	10m green to red-cheese shaped fruits. Fast growing has umbrella shaped foliage				
Lophostemon confertus	Brush box	Tree	Tall tree to 30m with attractive brown bark.		✔		✔
Banksia aemula	Wallum	Shrub	Small tree to 6m. Large cream banksia flowers attract honeyeaters.	✔			
Banksia robur	Swamp banksia	Shrub	Large leaved shrub to 2 metres. Produces large green flowers laden with nectar from summer to winter.	✔			
Dodonaea triquetra	Large leaved hop bush	Shrub	Shrub to 2 metres. Produces attractive hop like fruit that are lime green or purple.				
Elaeocarpus reticulatus	Blueberry ash	Shrub	5-10m attractive green foliage, fragrant white or pink bell-shaped flowers, blue berries			✔	✔
Hibiscus heterophyllus	Native rosella	Shrub	3-6m Pink, Pale yellow or bright yellow flowers.				
Melastoma affine	Blue-tongue or Native tibochina	Shrub	Shrub to 1,5 metres. Produces large open pink/mauve flowers followed by edible fruit. Responds to pruning.	✔			
Leptospermum speciosum	Tea tree	Shrub	Dense shrub 2x3m, heads of small white flowers, useful screen plant.				
Leptospermum polygalifolium	Wild may	Shrub	Weeping open habit, white open flowers in profusion in late winter				
Crinum pedunculatum	Crinum lily	Lily	Lily to 1 metre. Produces clusters of large white perfumes lily flowers. Hardy in a wide range of conditions.	✔			
Adiantum aethiopicum	Maiden-hair fern	Fern	Small fern with round leaves. Prefers shady moist conditions.	✔			
Blechnum indicum	Swamp water fern, Bungwall fern	Fern	Fern to 80cm. Prefers to grow in water.	✔			
Austromyrtus dulcis	Midyim berry	Ground cover	Ground cover with bright pink new leaves and edible berries				
Cyperus enervis	Sedge	Herb	15-30cm Forms loose, slender tussocks. Numerous spikelets about 1cm long.	✔			
Tetragonia tetragonoides	New Zealand spinach	Herb	Bright green salt tolerant groundcover with edible leaves			✔	
Viola hederacea	Native violet	Herb	Ground cover with rounded leaves and white and purple violet flowers. Spreads by runners. Prefers semi shade				
Baumea juncea	Jointed twig rush	Herb	1-2m sedge. Stout, cylindrical leaves. Nut 0.5cm long	✔			
Viola hederacea	Native violet	Herb	Ground cover with rounded leaves and white and purple violet flowers. Spreads by runners. Prefers semi shade				
Hibbertia scandens	Guinea flower, Snake vine	Creeper	Very hardy creeper. Can be pruned and trained as a hedge or shrub. Produces large open yellow flowers.			✔	
Dianella caerulea	Flax lily, Blue-berry lily	Tussock	Clumping plant to 60cm that spreads by suckers. Produces blue star like flowers &				

Scientific Name	Common Name	Form	Description	Wet	Koala	Salt	Street Trees
			bright blue-purple fruit.				
Gahnia sieberana	Sword grass	Tussock	Tall sedge to 1.5 metres. Produces tall heads of brown flowers with bright red seeds.	✔			
Themeda triandra	Kangaroo grass	Grass	Grass to 60cm. Produces attractive seed head and fine light green foliage. Benefits from annual prune.				
Eustrephus latifolius	Wombat berry	Vine	Scrambling plant. Produces small pink lily flowers followed by bright orange fruit.				
Geitonoplesium cymosum	Scrambling lily	Vine	Scrambling plant with shiny dark green leaves. Produces white star like flowers followed by black fruit.				
Hardenbergia violacea	False sarsaparilla	Vine	Scrambling vine produces a profusion of purple pea flowers in winter-spring.				
Smilax australis	Barb wire vine	Vine	Vigorous vine with bright green leaves and small spines				

Part 12 - Littoral Rainforest/Paperbark Woodland - North Stradbroke Island - Dunwich Area including Myora Springs

Scientific name	Common name	Form	Description	Wet	Koala	Salt	Street Trees
Acacia concurrens	Late black wattle	Tree	Short lived wattle to 8m. Prolific flowers in spring.				
Allocasuarina littoralis	Black she-oak	Tree	10m bright-green 'needle like' foliage, excellent self-mulching				
Allocasuarina torulosa	Forest she-oak	Tree	10m weeping foliage, can turn purplish in colour, corky bark				
Alphitonia excelsa	Red ash, Soap tree	Tree	Grows to 15m. Butterfly food plant. Attractive grey bark, black rounded fruit				✔
Angophora costata	Smooth barked apple	Tree	30m with salmon-pink bark, branches gnarled and twisted, handsome tree				
Angophora woodsiana	Smudgee	Tree	10-15m large foliage and fruit. Profuse, cream flowers				
Banksia serrata	Old man banksia	Tree	Small tree to 8m. Large cream banksia flowers attract honeyeaters.			✔	✔
Callitris columellaris	Bribie Island cypress	Tree	Tall dense foliaged tree to 20m.			✔	
Callitris rhomboidea	Cypress pine	Tree	Dense foliaged tree to 12m.			✔	
Casuarina glauca	Forest she-oak	Tree	10m weeping foliage, can turn purplish in colour, corky bark				
Corymbia intermedia	Pink bloodwood	Tree	20-30m Tree rough tessellated bark, white/cream flowers.		✔		
Petalostigma pubescens	Quinine bush	Tree	Small tree to 5m with attractive black tessellated bark. Produces yellow fruit.				
Eucalyptus pilularis	Blackbutt	Tree	Tall eucalypt to 30m. Half bark black and half smooth				
Eucalyptus planchonina		Tree	Medium to tall 25m, stringy bark with cream flowers in summer and large fruits				
Eucalyptus resinifera	Red mahogany	Tree	20-35m White to cream flowers. Elongated buds.		✔		
Eucalyptus robusta	Swamp mahogany	Tree	20m glossy green foliage with creamy yellow flowers in spring		✔		
Eucalyptus tereticornis	QLD Blue gum	Tree	30m smooth bark with white- bluish grey surface	✔	✔		✔
Eucalyptus tesselaris	Moreton Bay ash	Tree	25m half bark with lower half grey & tessellated and smooth bark above				✔
Lophostemon confertus	Brush box	Tree	Tall tree to 30m with attractive brown bark.		✔		
Livistona australis	Cabbage-tree palm	Tree	Large palm with fan shaped leaves.	✔			
Melaleuca quinquenervia	Paper barked tea-tree	Tree	Trees to 30 metres. White papery bark. Produces masses of creamy white brush flowers in autumn. Excellent nectar producer. Will tolerate dry spells.	✔	✔		✔
Acacia suaveolens	Sweet wattle	Shrub	Shrub to 3m with sweet scented flowers, responds well to pruning. Good small screen.				
Acacia ulicifolia	Prickly moses	Shrub	Hardy shrub with attractive foliage, cream ball flowers				
Baeckea stenophylla		Shrub	2m x 2m small white flowers during most of year, good feature plant				
Banksia aemula	Wallum	Shrub	Small tree to 6m. Large cream banksia flowers attract honeyeaters.	✔			
Banksia spinulosa var collina	Golden candles	Shrub	Shrub to 3 metres. Produces large yellow flowers in winter and spring.				
Dodonaea triquetra	Large leaved hop bush	Shrub	Shrub to 2 metres. Produces attractive hop like fruit that are lime green or purple.				
Elaeocarpus reticulatus	Blueberry ash	Shrub	5-10m attractive green foliage, fragrant white or pink bell-shaped flowers, blue berries			✔	✔
Hibiscus heterophyllus	Native rosella	Shrub	3-6m Pink, Pale yellow or bright yellow flowers.				
Jacksonia stackhousii	Dogwood	Shrub	Fine foliage with bright yellow foliage				
Leptospermum polygalifolium	Wild may	Shrub	Weeping open habit, white open flowers in profusion in late winter				
Leptospermum speciosum		Shrub	Dense shrub 2x3m good screen plant, small white flowers				
Petrophila shirleyae	Cone sticks	Shrub	Shrub to 1m firm leaves with cone shaped fruit				
Podocarpus spinulosus	Native plum	Shrub	Shrub to 1 metre. Produces dark green dense foliage.				

Scientific name	Common name	Form	Description	Wet	Koala	Salt	Street Trees
Ricinocarpus pinifolius	Wedding bush	Shrub	Shrub to 2 metres. Produces a mass of white flowers. Spectacular flowering shrub.				
Adiantum aethiopicum	Maiden-hair fern	Fern	Small fern with round leaves. Prefers shady moist conditions.	✔			
Blechnum indicum	Swamp water fern	Fern	Fern to 80cm. Prefers to grow in water.	✔			
Cyathea cooperi	Tree fern	Fern	Tree fern with large bright green fronds	✔			
Hibbertia scandens	Guinea flower, Snake vine	Creeper	Very hardy creeper. Can be pruned and trained as a hedge or shrub. Produces large open yellow flowers.				
Hardenbergia violacea	False sarsaparilla	Vine	Scrambling vine produces a profusion of purple pea flowers in winter-spring.				
Austromyrtus dulcis	Midyim berry	Ground cover	Ground cover with bright pink new leaves and edible berries				
Crinum pedunculatum	Crinum lily	Lily	Lily to 1 metre. Produces clusters of large white perfumes lily flowers. Hardy in a wide range of conditions.	✔			
Baumea juncea	Jointed twig rush	Herb	1-2m sedge. Stout, cylindrical leaves. Nut 0.5cm long	✔			
Viola hederacea	Native violet	Herb	Ground cover with rounded leaves and white and purple violet flowers. Spreads by runners. Prefers semi shade				
Myora only							
Acmena smithii	Lily pilly	Tree	Medium sized tree to 20m new pink growth, white flowers in summer followed by pink edible fruit.	✔			
Acronychia imperforata		Tree	9m or less. Shiny green leaves, cream star shaped flowers in autumn				
Commersonia bartramia	Brown kurrajong	Tree	Small shade tree to 6 metres. Produces a mass of small white flowers.				
Diospyros humilis var ferrea		Tree	Large shrub or small tree to 8m , reddish foliage, edible fruits, handsome small tree				
Duboisia myoporoides	Corkwood	Tree	6m leaves shiny. Useful screen plant and quick growing. White star like flowers.				
Elaeocarpus obovatus	Blueberry ash	Tree	15-25m grey bark. Cream to white flowers.				
Euroschinus falcatus		Tree	Medium sized tree, small white to pink flowers in large sprays in summer				
Ficus coronata	Sandpaper fig	Tree	Tree to 4 metres. Produces large sandpapery leaves and edible fruit. Butterfly food tree. Attracts birds.	✔			
Ficus platypoda	Fig	Tree	Smaller fig tree, nice foliage				
Glochidion ferdinandii	Cheese wood tree	Tree	10m green to red-cheese shaped fruits. Fast growing	✔			
Guoia semiglauca		Tree	10m or less, dark green leaves with grey undersides. Cream flowers.				
Macaranga tanarius	Macaranga	Tree	Dense spreading tree to 8 metres. Produces large rounded leaves.				
Mallotus discolor		Tree	15m. leaves green on top and silvery underneath. Prolific small yellow fruits				
Mallotus philippensis	Red kamala	Tree	17m attractive green foliage, masses of red fruit				
Melicope ellaryana syn. Euodia		Tree	10m small star shaped pink flowers in mass with clusters of seeds following				
Omalanthus populifolius	Bleeding heart	Tree	Heart shaped leaves with red stems, attractive sparse tree				
Podocarpus elatus	Brown pine	Tree	Large tree 35m, spreading crown, blueish-black plum like fruit, pointed leaves				
Polyalthia nitidissima		Tree	Small tree, very shiny leaves, small yellow flowers and groups of red fruits				
Tristaniopsis laurina	Water gum	Tree	7m Ornamental shade tree with yellow flowers in spring				
Mucuna gigantea	Velvet bean	Vine	Very vigorous twining climber. Flowering habit attractive				
Alpinia caerulea	Native ginger	Shrub	Long strap like leaves, blue fruit	✔			
Ficus fraseri	Sandpaper fig	Shrub	10m. Sandpaper leaves, attracts birds	✔			
Alocasia macrorrhiza	Cunjevoi lily	Lily	Very large, spade shaped leaves. Greenish cream flower in centre of leaves				
Archontophoenix cunninghamiana	Bangalow palm	Palm tree	Tall palm prefers shelter especially from salt winds. Produces large clusters of small red fruit.				
Oplismenus aemulus	Basket grass	Grass	Perennial trailing grass which roots at nodes, oval leaves				

Scientific name	Common name	Form	Description	Wet	Koala	Salt	Street Trees
Ottochloa gracillima	Slender shade grass	Grass	Creeping grass, forms dense mats, partial to full shade				

Part 13 - Preferred Native Species - Point Lookout

Table A - Ground covers, climbers, ferns and tussock plants

Name	Common Name	Plant Characteristics	Growth Requirements	Fire Retardance
Adrantum aethiopicum	Maiden-hair ferm	Evergreen plant with large leaves, to 1.5m by 2m.	Requires light to medium moist soil in a protected, partially shaded position.	High
Alocasia macrorrhiza	Elephant ear, Cunjevoi	Evergreen plant with large leaves. Poisonous flowers in green spathes in summer.	Requires light to medium soil in a protected, partially shaded position.	High
Alpinia caerulea	Native ginger	Evergreen plant to 2m by 1m. Large red and white flowers in terminal clusters followed by blue globular berries.	Prefers humus-rich, damp soil in a protected shady position.	High
Austromyrtus dulcis	Midyim	Evergreen shrub to 50cm by 80cm. White flowers in winter and spring followed by small edible fruits.	Prefers moist to heavy soil in a protected, heavily shaded position.	Medium
Baeckea stenophylla	Weeping baeckea	Evergreen shrub to 1m with weeping branches. White flowers in spring.	Prefers light, swampy soil in an open, sunny position.	Low
Blandfordia grandiflora	Christmas bells	Lily to 1m by 50cm. Red turban shaped flowers tipped with yellow in summer.	Prefers light, moist soil in a protected, shady position.	High
Blechnum indicum	Swamp water fern, Bungwall fern	Evergreen fern to 1m by 1.5m.	Prefers swampy soil in a protected, shady position.	High
Carex appressa	Tall sedge	Tussock plant to 60cm by 50cm with long narrow leaves.	Prefers wet soil in an open, sunny position.	Good
Carex pumila	Sedge	Tussock plant to 30cm by 25cm.	Prefers very wet soil in a sunny position.	High
Carpobrotus glavclescens	Pig face	Succulent ground creeper to 30cm by 1m. Large light purple flowers in summer.	Prefers light soil in a sunny position. Salt tolerant.	High
Christella dentata	Binung	Evergreen fern to 1m by 1m	Prefers light to heavy soil in a protected, shady position.	High
Crinum pedunculatum	Crinum lily	Grows to 60cm by 2m. White, tubular, fragrant flowers in clusters of 25.	Prefers light to medium soil in a damp, sunny position.	High
Cyathea cooperi	Tree fern	Evergreen tree fern to 14m by 5m.	Prefers light to medium, moist, rich soil in a protected position.	High
Cymbopogon refractus	Barb-wire grass	Tussock plant to 1m by 70cm. Flowers in summer.	Adaptable to most positions.	Low
Davallia pyxidata	Hare's foot fern	Evergreen fern to 75cm by 1m.	Prefers light to medium, moist, rich soil in a protected position.	High
Dianella caerula	Flax lily, Blue-berry lily	Grows to 50cm x 30cm. Small blue flowers in loose cluster.	Adaptable to most soils, but prefers a protected, shaded position.	High
Dianella longifolia	Blue-berry lily	Grows to 1.5m by 60cm. Blue or yellow-blue to white flowers in loose cluster in spring-summer.	Adaptable to most soils, but prefers a protected, shaded position.	High
Dichanthium sericeum	QLD Blue grass	Tussock plant to 2m by 70cm. Flowers in summer.	Adaptable to most positions but prefers heavy soils.	Low
Eustrephus latifolius var. angustifolia	Wombat berry	Evergreen slender vine to 10m. White flower clusters in spring followed by orange berries.	Prefers light moist soil in a protected semi-shaded position.	High
Gahnia sieberana	Sword grass	Evergreen tussock plant to 3m by 2m.	Prefers damp soil in an open, sunny position.	Medium
Geitonoplesium cymosum	Scrambling lily	Evergreen wiry vine to 1m. Creamy white, green or purplish flowers in spring.	Prefers moist soil in a protected, shady position.	High
Hardenbergia violacea	False sarsaparilla	Evergreen vine forming carpets. Purple flowers (but white, pink or pale mauve forms also occur) in heavy clusters in spring.	Prefers light to heavy soil in an open, sunny position.	High
Helichrysum bracteatum	Golden everlasting	Grows to 1m by 1m. Golden, white or straw coloured flowers 4cm across in spring to summer.	Adaptable to most soils but prefers an open, sunny position.	Good
Helichrysum ramosissimum	Yellow buttons	Herb to 40cm by 40cm. Profuse yellow flowers in late winter to spring.	Prefers light soil in a protected, semi-shaded position.	High
Hibbertia scandens	Guinea flower, Snake vine	Creeping plant or shrub to 20cm by 2.5m. Large yellow flowers in summer.	Prefers well drained, sandy soil in an open position. Salt spray resistant.	High

Schedule 10 - Vegetation Species List

Name	Common Name	Plant Characteristics	Growth Requirements	Fire Retardance
Hibbertia obtusifolia	Guinea flower	Evergreen shrub to 50cm by 1.5m. Large yellow flowers spring to summer.	Prefers light soil in a protected, semi-shaded position.	High
Ipomoea cairica	Coast morning glory, Mile-a-minute	Creeping plant to 20cm by 4m. Mauve-purple flowers in summer.	Prefers well drained, sandy soil in an open position. Salt spray resistant.	High
Ipomoea pes-caprae	Goat's foot convolvulus	Creeping plant to 20cm by 4m. Mauve-purple flowers in summer.	Prefers well drained, sandy soil in an open position. Salt spray resistant.	High
Jacksonia stackhousii		Evergreen shrub to 50cm tall. Yellow flowers in mid winter to spring.	Prefers well drained soil in an open, sunny position.	Medium
Lomandra longifolia	Long-leaf matrush	Tussock plant to 70cm by 1m. Leaves are narrow and strap-like. Yellow, small, strongly perfumed flowers.	Adaptable to most positions.	High
Melastoma affine	Blue-tongue	Shrub to 2m by 2m with large mauve-purple flowers mainly in summer.	Prefers moist, well composted soil in a protected, shady position.	Medium
Phyla nodiflora	Fog-fruit	Creeping herb to 30cm by 1m. Pink loose clusters of flowers most of the year.	Prefers light to medium soil in an open, sunny position. Salt spray tolerant.	High
Platycerium bifurcatum	Elkhorn	Evergreen fern, may spread to 2m.	Epiphyte on trees in a protected position.	High
Restio tetraphyllus	Feather plant	Creeping plant to 1m by 50cm.	Prefers moist soil in an open, sunny position.	Good
Smilax australis	Wait-a-while, Barb-wire vine, Native sarsaparilla	Evergreen vine to 4m.	Prefers moist soil in a protected position.	High
Spinifex hirsutus	Hairy spinifex	Creeping grass to 30cm. Good for stabilizing sand.	Prefers well drained soil in an open, sunny position.	Good
Themeda triandra	Kangaroo grass	Tussock plant to 1m by 70cm. Flowers in summer.	Adaptable to most positions.	Medium
Viola hederacea	Native violet	Small herb to 5cm by 15cm. Dainty lilac to white flowers in spring and summer.	Prefers light to medium well drained soil in a protected, shaded position.	High
Vitex trifolia		Evergreen shrub to 2.5m by 3m. Lavender tubular flowers in dense, terminal sprays.	Adaptable to most soils but prefers a protected, sunny position.	High

Table B - Shrubs

Name	Common Name	Plant Characteristics	Growth Requirements	Fire Retardance
Acacia leiocalyx		Evergreen shrub to 6m by 6m. Profuse yellow spiked flowers from mid winter to spring.	Prefers light, well drained soil in an open, sunny position.	Low
Acacia sophorae	Coastal acacia	Grows to 5m by 2m. Yellow flower spikes in spring.	Prefers well drained sandy soil in an open, sunny position.	Medium
Banksia oblongifolia	Dwarf banksia	Multi-stemmed shrub to 3m, but usually 1m. Golden flower spikes to 10cm long in autumn and winter.	Prefers damp or swampy soil in an open, sunny position.	Medium
Banksia robur	Broad-leaved banksia	Evergreen shrub to 2m by 2m. Bright green flower spikes 12cm long in autumn.	Prefers damp or swampy soil in an open, sunny position.	Medium
Banksia spinulosa	Golden candlesticks	Evergreen shrub to 3m by 2m. Yellowish bronze flowers 18cm long and 6cm wide in summer and autumn.	Very hardy. Prefers light to medium soil in an open, sunny position.	Medium
Callistemon pachyphyllus	Swamp bottle-brush	Grows to 3m by 3m. Deep crimson or green flowers up to 10cm long in spring and summer.	Prefers light to heavy soil in a protected, moist position.	Low
Dodonaea triquetra	Large-leaved hop bush	Evergreen shrub to 3m by 2m.	Adaptable to most positions.	Good
Elaeocarpus reticulatus	Blueberry ash	Evergreen shrub to tree to 7m by 3m. Profuse pink or white fringed tubular flowers in summer followed by dark blue berries.	Prefers heavy, moist soil in a protected, sunny position.	High
Hibiscus heterophyllus	Native rosella, swamp hibiscus	Evergreen shrub to 3m by 2m. Large white flowers with deep purple hearts in summer.	Prefers light to medium, moist, well-drained soil in a protected, sunny position.	Good
Leptospermum flavescens	Tantoon tea tree, Wild may	Evergreen shrub to 3m x 2m. Profuse white fragrant flowers in summer.	Prefers light moist soil in an open, sunny position.	Low
Leptospermum liversidgei	Wild may	Evergreen shrub to 1m by 1m. Profuse pink or white flowers in spring.	Prefers light, swampy soil in an open, sunny position.	Low
Leptospermum semibaccatum	Wild may	Evergreen shrub to 2m. White to pink flowers in spring.	Prefers light, swampy soil in an open, sunny position.	Low
Leptospermum whitei	Wild may	Evergreen shrub or small tree to 6m tall. White flowers in mid to late spring.	Prefers light, swampy soil in an open, sunny position.	Low
Melaleuca nodosa	Prickly-leaved paperbark	Evergreen shrub to 3m by 2.5m. Yellow flowers in dense globular heads in spring and autumn.	Prefers well drained soil in an open, sunny position.	Low
Petrophile shirleyae	Cone sticks	Shrub to 1.2m with sparse foliage. White flowers in spring to summer followed by cone-like seed cases.	Prefers moist soil in a protected, sunny position.	Medium
Podocarpus spinulosus	Native plum	Evergreen shrub to 1m by 1m. Produces bluish black edible drupes.	Prefers well drained soil in a moist, shaded position.	High
Ricinocarpus pinifolius	Wedding bush	Evergreen shrub to 1.2m by 1.5m. Crowded white flowers in spring.	Prefers well drained, well composted soil in an open, sunny position.	Good
Scaevola calendulacea	Dune fan flower	Sprawling multi-stemmed herb with succulent leaves forming dense mats. Blue flowers with yellow centre throughout the year.	Prefers well drained sandy soil in an open, sunny position.	High
Xanthorrhoea fulva	Grass tree	Slow growing grass tree with long white/yellow flower spike in late winter to spring.	Prefers damp or swampy soil in an open, sunny position.	Medium

Table C - Trees and palms

Name	Common Name	Plant Characteristics	Growth Requirements	Fire Retardance
Acacia aulacocarpa	Hickory wattle	Evergreen tree to 6m by 6m. Yellow flower spikes in clusters.	Well drained soil in an open, sunny position.	Low
Acacia concurrens	Brisbane black wattle	Evergreen shrub or tree to 15m by 6m. Yellow flower spikes in summer to mid-autumn.	Adaptable to most soils but prefers a well drained, fertile soil in an open, sunny position.	Low
Alectryon coriaceus	Soap berry	Evergreen tree to 5m by 2m. Yellow flowers in pendant sprays.	Prefers well composted, well drained, moist soil in a protected, sunny position.	High
Alphitonia excelsa	Red ash, soap tree	Evergreen tree to 45m by 8m. Small, cream and fragrant flowers.	Prefers well composted, well drained, moist soil in a protected, shady position.	Good
Angophora costata	Rusty gum	Evergreen tree to 30m by 10m. White fluffy flowers in summer.	Prefers light to heavy soil in an open, sunny position.	Low
Angophora woodsiana	Smudgee	Evergreen tree to 30m by 10m. White fluffy flowers in summer.	Prefers light to heavy soil in an open, sunny position.	Low
Archontophoenix cunninghamiana	Bangalow palm, Piccabeen palm	Evergreen palm to 15m by 5m with smooth trunk and feather-like leaves. Pink to pale violet flowers in sprays.	Prefers light to medium, moist soils in a protected position.	High
Banksia aemula	Wallum	Evergreen bushy shrub or robust tree to 8m by 8m. Large mauve and orange flowers from autumn to winter.	Prefers well drained, sandy soils in a sunny position.	Low
Banksia integrifolia	Coast banksia	Evergreen tree to 20m by 6m. Lime yellow flowers 15cm long from autumn to winter.	Prefers light, neutral, well drained soil in an open, sunny position.	Low
Banksia serrata	Old man banksia	Evergreen tree to 10m by 6m. Grey woolly flower spikes 15cm long in summer.	Prefers well drained soil in an open, sunny position.	Low
Callitris columellarius	Bribie Island cypress, White cypress	Grows to 20m by 4m.	Prefers light to medium, well drained soil in a sunny, open position.	High
Callitris rhomboidea	Cypress pine	Grows to 12m by 3m.	Prefers a well drained soil in a semi-shaded, protected position.	High
Casuarina equisetifolia var. incana	Coast she-oak	Grows to 30m by 6m	Prefers light, well drained soil in an open, sunny position.	Medium
Casuarina glauca	Swamp she-oak	Grows to 15m by 5m.	Prefers light, well drained soil in an open, sunny position. Salt tolerant.	Medium
Casuarina littoralis	Black she-oak	Grows to 10m by 5m.	Adaptable to most soils. Sea spray resistant.	Medium
Casuarina torulosa	Rose she-oak	Grows to 20m by 5m.	Prefers light to medium soil in a protected, sunny position.	Medium
Commersonia bartramii	Brown kurrajong	Evergreen tree to 6m by 2m. Cream flowers in spring and summer.	Adaptable to most soils but prefers a protected, shady position.	High
Cupaniopsis anacardioides	Cupania tree, Tuckeroo	Evergreen tree to 10m by 3m.	Prefers light to medium soil in an open, sunny position.	High
Duboisia myoporoides	Corkwood	Evergreen tree to 12m by 3m. Star-shaped white flowers in sprays.	Prefers rich, moist soil in a protected, sunny position.	High
Elaeocarpus obovatus		Grows to 30m by 6m.	Although preferring shade, it is adaptable to most positions.	High
Endiandra sieberi	Pink walnut	Evergreen tree to 6m by 2.5m.	Prefers well composted, moist, well drained soil in a protected, shady position.	High
Eucalyptus intermedia	Pink bloodwood	Evergreen tree to 50m by 7m. White flowers.	Prefers light to heavy soil in an open, sunny position.	Low
Eucalyptus pillularis	Blackbutt	Evergreen tree to 70m by 6m. Creamy white flowers appear in spring and summer.	Prefers well drained sandy soil in a protected sunny position.	Low
Eucalyptus planchoniana	Planchon's stringybark	Evergreen tree to 22m by 5m. Creamy white flowers in mid summer.	Prefers light to medium, well drained soil in an open, sunny position.	Low
Eucalyptus resinifera	Red stringybark	Evergreen tree to 50m by 6m. White flowers in summer.	Prefers light, moist, well drained soil in an open semi-shaded position.	Low

Name	Common Name	Plant Characteristics	Growth Requirements	Fire Retardance
Eucalyptus robusta	Swamp messmate	Evergreen tree to 18m by 5m. White flowers in autumn.	Adaptable to most soils, but prefers an open, sunny position.	Low
Eucalyptus signata	Scribbly gum	Evergreen tree to 30m by 5m. White flowers from winter to spring.	Prefers light, poor, well drained soil in an open, sunny position.	Low
Eucalyptus tereticornis	Blue gum	Evergreen tree to 40m by 5m. White flowers from summer to spring.	Prefers medium to heavy soil in an open, sunny position.	Low
Eucalyptus tessellaris	Carbeen	Evergreen tree to 30m by 4m. Whitish flowers in summer.	Prefers light, deep, sandy loam in an open, sunny position.	Low
Euodia elleryana	Euodia	Evergreen tree to 15m by 4m. Pink, dense clusters of flowers in summer.	Prefers light to medium soil in an open, sunny position.	High
Ficus coronata	Sandpaper fig	Evergreen tree to 15m by 5m. Produces marble sized edible figs throughout the year.	Prefers light to medium, well drained soil in an open, sunny position.	High
Ficus fraseri	Sandpaper fig	Evergreen tree to 15m by 5m. Produces marble sized edible figs in spring.	Prefers light to medium, well drained soil in an open, sunny position.	High
Ficus platypoda	Small-leaved Moreton Bay fig	Evergreen tree to 10m by 4m.	Prefers moist, rich soil in a sunny, protected position.	High
Glochidion ferdinandii	Cheese tree	Evergreen tree to 24m by 4m.	Prefers light to medium, well composted soil in an open, sunny position.	High
Hibiscus tiliaceus	Cotton tree	Wide spreading tree to 9m tall. Large yellow flowers with a deep pink centre in summer.	Prefers light soil in an open, sunny position. Is salt spray tolerant.	Good
Livistona australis	Cabbage-tree palm	Evergreen palm to 20m by 2m with rough, scarred trunk and fan-shaped leaves. Yellow flowers in sprays in early spring.	Prefers medium to heavy, moist, well-drained soil in a protected, sunny position.	Medium
Lophostemon confertus	Brush box	Evergreen tree to 50m by 8m. White, dainty and fragrant flowers in spring.	Prefers light to heavy soil in an open, sunny position.	Low
Macaranga tanarius	Macaranga	Evergreen tree to 6m by 2m.	Prefers well composted soil in a protected, semi-shaded position.	High
Mallotus philippinensis		Evergreen tree to 6m by 3m.	Prefers well composted, moist, well drained soil in a protected, sunny position.	High
Melaleuca quinquenervia	Paper-barked tea-tree	Evergreen tree to 25m by 5m. Cream flowers 20cm long from spring to summer.	Prefers moist soil in an open, sunny position.	Low
Omalanthus populifolius	Native bleeding heart	Evergreen tree to 3m by 2m.	Prefers medium to heavy, moist soil in a protected, shady position.	High
Pandanus pedunculatus	Pandanus palm, Screw palm	Evergreen tree to 6m by 3m. Large yellow/orange inedible fruits.	Prefers light, well drained soil in most positions.	Medium
Petalostigma pubescens	Quinine bush	Evergreen tree to 10m by 4m. Produces marble-sized inedible orange fruit.	Adaptable to most conditions.	Good
Pipturus argenteus	Native mulberry	Evergreen tree to 6m by 3m. Edible mulberry-like fruit.	Prefers light to medium, well composted soil in a protected, shaded position.	High
Podocarpus elatus	She-pine	Tree to 40m by 5m. Edible fruit.	Prefers light to medium soil in an open, sunny position.	Medium
Tristaniopsis laurina	Water gum	Evergreen tree to 7m by 3m. Yellow clusters of flowers in summer.	Prefers light to medium soil in a protected, sunny position.	High

Schedule 10 - Vegetation Species List

this page purposely
left blank

Schedule 11 - Water Quality Objectives

Process for determining Water Quality Objectives relevant to the site -

(1) To identify the creek catchment applicable to the site, refer to Map 1 - Redland City Creek Catchments;

(2) To identify the environmental values associated with that creek catchment, refer to Table 1 - Environmental Values of Redland City Waterways and Coastal Areas;

Note -

- Tingalpa Creek and Eprapah Creek have defined reaches or waterways within the creek catchment. In this instance establish the applicable reach or waterway by referring to -
  - Table 2 - Tingalpa Creek Reaches;
  - Table 3 - Eprapah Creek Reaches and Waterways;
- There may be more than one environmental value associated with the creek, reach or waterway.

(3) Refer to the Water Quality Objectives Data Set detailed in Table 4 - Water Quality Objectives, which identifies the adopted standards based on the relevant environmental value.

Map 1 - Redland City Creek Catchments

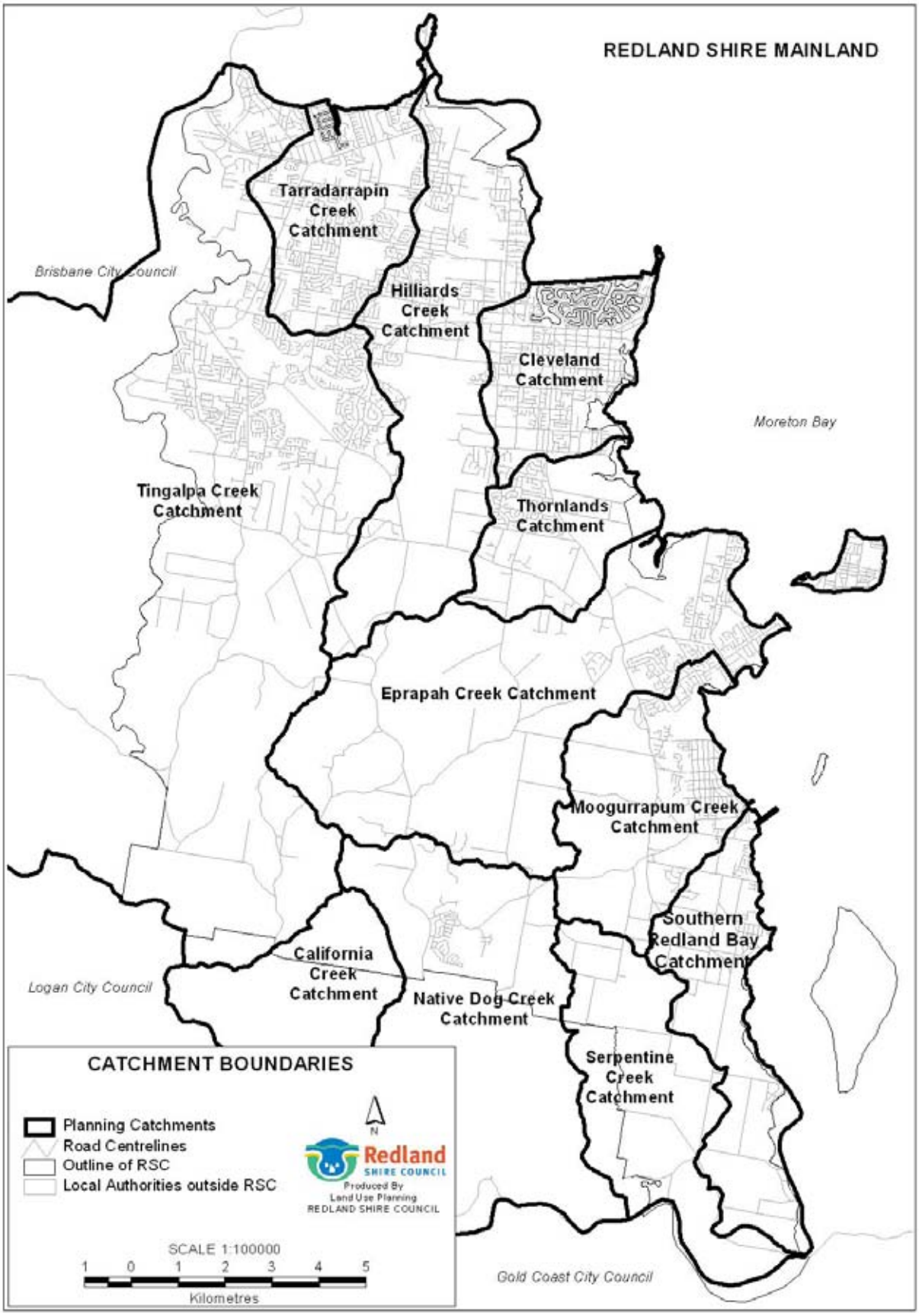

Table 1 - Environmental Values of Redland City Waterways and Coastal Areas

Values → / Features ↓	Aquatic Ecosystems	Wildlife Habitat	Human Consumer	Primary Recreation	Secondary Recreation	Visual Recreation	Cultural Heritage	Industrial Use	Aquaculture	Drinking Water	Irrigation	Stock Water	Farm Supply	Oystering	Seagrass
Tingalpa Creek [1]	*Refer to Table 2 for a description of the reaches within this waterway*														
Upper Reaches															
Leslie Harrison Dam															
Middle Reaches															
Lower Reaches															
Eprapah Creek [2]	*Refer to Table 3 for a description of the reaches within this waterway*														
Upper Catchment															
Sandy Creek															
Middle Catchment															
Little Eprapah Creek															
Lower Catchment															
Estuarine Reaches															
Other Creeks															
Tarradarrapin Creek [3]															
Hilliards Creek [3]															
Cleveland Catchment [3]															
Thornlands Catchment [3]															
Moogurrapum Creek [3]															
Southern Redland Bay [3]															
Waterloo Bay [3]															
Coochiemudlo Island [3]															
Russell Island [3]															
Macleay Island [3]															
Karragarra Island [3]															
Lamb Island [3]															
North Stradbroke Island [4]															
Coast and Beaches [3]															
Eastern Moreton Bay [4]															

Notes -

Sources -

1 *Tingalpa Creek Waterway Management Plan* (2003)

2 *Draft Eprapah Creek Waterway Management Plan* - community consultation stage 2 outcomes (unpublished)

3 *Southeast Queensland Regional Water Quality Management Strategy* - Volume 4 Logan Nerang Region (2001)

4 *Southeast Queensland Regional Water Quality Management Strategy* - Volume 3 Moreton Bay Catchment Region (2001)

Table 2 - Tingalpa Creek Reaches

Reach Type	Waterways Included
Upper Reaches	■ Tingalpa Creek and tributaries upstream of the Tingalpa Reservoir ■ Buhot Creek and tributaries ■ Wallaby Creek and tributaries
Tingalpa Reservoir	Tingalpa Reservoir
Middle Reaches	Freshwater reaches of Coolnwynpin Creek and tributaries
Lower Reaches	Tidal reaches of Tingalpa Creek and Coolnwynpin Creek

Table 3 - Eprapah Creek Reaches and Waterways

Reach Type	Waterways Included
Upper Catchment	Eprapah Creek and tributaries upstream of Mount Cotton Road crossing
Sandy Creek	Sandy Creek and tributaries
Middle Catchment	Eprapah Creek and tributaries between Mt Cotton Road crossing and Luke Street (east)
Little Eprapah Creek	Little Eprapah Creek and tributaries upstream of Brookvale Drive.
Lower Catchment	Eprapah Creek and tributaries between Luke Street (east) and tidal limit (within Eprapah Scouts)
Estuarine Reaches	All tidal reaches and tributaries

Note -

Environmental values for the local government's waterways are prepared in accordance with the *Environmental Protection Act 1997*. Tingalpa Creek and Eprapah Creek have detailed Waterway Management Plans in place and the environmental values of these creeks were identified through a community consultation process. For the remaining creeks within the local government area, the environmental values identified in the *South-East Queensland Regional Water Quality Management Strategy* are adopted.

Table 4 - Water Quality Objectives

Indicator	Set A	Set B	Set C
Associated Environmental Values	Aquatic Ecosystems, Wildlife Habitat, Cultural Heritage, Secondary Recreation and Visual Recreation, Industry, Stock and Irrigation	Human Consumer	Primary Recreation
pH [5]	6.5 - 8.0		
Conductivity (µS/cm) [6]	<400		
Dissolved Oxygen (% sat) [7]	80 - 105		
Turbidity (NTU) [7]	20		
Secchi depth [8]	>0.2m		> 1.2m
Suspended Solids (mg/L) [7]	15		
Chlorophyll-a (µg/L) [7]	8		
Total Nitrogen (µg/L) [7]	650		
Total Phosphorus (µg/L)[7]	70		
Aluminum (µg/L) [9]	Insufficient Data		
Total Arsenic (µg/L) [6]	Insufficient Data		
Cadmium (µg/L) [6]	0.7		
Chromium (CrVI)(µg/L) [6]	4.4		
Copper (µg/L) [5]	1.3	1.0 (tainting)	
Iron (µg/L) [6]	Insufficient Data		
Lead (µg/L) [6]	4.4		
Nickel (µg/L) [6]	7		
Zinc (µg/L) [5]	15	5.0 (tainting)	

Indicator	Set A	Set B	Set C
Associated Environmental Values	**Aquatic Ecosystems, Wildlife Habitat, Cultural Heritage, Secondary Recreation and Visual Recreation, Industry, Stock and Irrigation**	**Human Consumer**	**Primary Recreation**
Oil and Grease [10]	No visible film or odour		
Faecal Coliforms [11]	■ The median bacterial content in fresh or marine waters should not be exceeded - ▸ 1000 organisms/100mL (minimum of 5 samples taken at regular intervals not exceeding 1 month, with 4 out of 5 not exceeding 4000 organisms/100mL); ▸ 230 enterococci organisms/100mL (maximum number in any one sample: 450-700 organisms/ 100mL).		■ The median bacterial content in fresh or marine waters should not be exceeded - ▸ 150 faecal coliform organisms/100mL (minimum of 5 samples taken at regular intervals not exceeding 1 month, with 4 to 5 no exceeding 600 organisms/100mL); ▸ 35 enterococci organsims/100mL (maximum number in any one sample: 60-100 organisms/ 100mL); ■ Pathogenic free living protozoans should be absent from bodies of fresh water.
Litter / Gross Pollutants [7]	No visible litter or debris		

Note -

Sources -

5 *Draft Queensland Water Quality Guidelines* (2001)
6 *South East Queensland Regional Water Quality Monitoring Guidelines* (2001) Volume 1, Table A2.2.1
7 *South East Queensland Regional Water Quality Monitoring Guidelines* (2001) Volume 1, Table A9
8 *Guideline on Identifying and Applying Water Quality Objectives in Brisbane City* - Version 1 - March (2000)
9 *Australian Water Quality Guidelines* (2000) Table 3.4.1 Page 3.4-5
10. *Australian Water Quality Guidelines* (2000) Section 5.2.3 Page 5-8
11. *Australian Water Quality Guidelines* (2000) Section 5.2.3 Page 5-4

Schedule 11 - Water Quality Objectives

this page purposely
left blank

Schedule 12 - Weed Species List

Table 1 - State and Locally Declared Pests

Common Name	Botanical Name	Status
Acacia's non-indigenous to Australia	Acacia spp (other than Acacia nilotica and A.farnesiana)	Class 1
African boxthorn	Lycium ferocissimum	Class 2
African fountain grass	Pennisetum setaceum	Class 3
African tulip tree	Spathodea campanulate	Class 3
Alligator weed	Alternanthera philoxeroides	Class 1, WONS, SROC
American rat's tail grass	Sporobolus jacquemontii	Class 2
Anchored water hyacinth	Eichhornia azurea	Class 1
Annual ragweed	Ambrosia artemisiifolia	Class 2
Asparagus fern	Protasparagus africanus	Class 3
Asparagus fern	Protasparagus aethiopicus CV. Springeri (syn. Densiflorus)	Class 3
Athel pine	Tamarix aphylla	Class 3, WONS
Badhara bush	Gmelina asiatica	Class 1
Balloon vine	Cardiospermum grandiflorum	Class 3
Barner grass / cow cane	Pennisetum purpureum x P. glaucum, Pennisetum purpureum	LL13
Bitou bush	Chrysanthemoides monilifera subsp. Rotundata	Class 1, WONS
Blackberry	Rubus anglocandicans and R. fruiticosus agg	Class 3
Bolivian wattle	Acacia boliviana	Class 1
Bridal creeper	Protasparagus asparagoides	Class 1, WONS
Cabomba	Cabomba Sp.	Class 2, WONS
Camphor laurel	Cinnamomum camphora	Class 3, SROC
Cats claw creeper	Macfadyena unguis-cati	Class 3, SROC
Chilean needle grass	Naselle neessiana	Class 1, WONS
Chinee apple	Ziziphus mauritiana	Class 2
Chinese celtis	Celtis sinensis	Class 3
Christ thorn	Ziziphus spina-christi	Class 1
Climbing asparagus	Protasparagus plumosus	Class 3
Cotton-leaf physic nut, bellyache bush	Jatropha gossypiifolia	Class 2
Creeping lantana	Lantana montevidensis	Class 3
Cutch tree	Acacia catechu	Class 1, NAL
Dutchman's pipe	Aristolochia spp. Other than native species	Class 3
Eurasian watermilfoil	Myriophyllum spicatum	Class 1
Fireweed	Senecio madagacariensis	Class 2
Giant rats tail grass	Sporobolus pyramidalis and S. natalensis	Class 2
Giant sensitive plant, giant sensitive tree	Mimosa invisa	Class 2
Glush weed	Hygrophilia costata	Class 1
Gorse	Ulex europaeus	Class 1, WONS
Green Cestrum	Cestrum parqui	LL13, IPL
Groundsel Bush	Baccharis halimifolia	Class 2, SROC
Harrisia cactus	Eriocereus spp	Class 2
Harungana	Harungana madagascariensis	Class 3
Honey locust (including cultivars and varieties)	Gleditsia spp	Class 1
Horsetails	Equisetum sp.	Class 1
Hymenachne	Hymenachne amplexicaulis	Class 2, WONS
Karoo thorn	Acacia karoo	Class 1, NAL
Kochia	Kochia scoparia syn Bassia scoparia	Class 1
Koster's curse	Clidemia hirta	Class 1
Lagarosiphon	Lagarosiphon major	Class 1, NAL
Lantana	Lantana spp	Class 3, SROC
Madeira vine	Anredera cordifolia	Class 3, SROC
Madras thorn	Pithecellobium dulce (Syn mimosa dulcis)	Class 1

Schedule 12 - Weed Species List

Common Name	Botanical Name	Status
Mesquites	Prosopis spp and hybrids other than P. glandulosa, pallida and velutina	Class 2, WONS
Mesquites	Prosopis glandulosa, pallida and velutina	Class 1, WONS
Miconia	Miconia sp	Class 1
Mikania vine	Mikania spp	Class 1
Mimosa bush	Acacia farnesiana	Class 1, IPL
Mimosa pigra	Mimosa pigra	Class 1, WONS
Mother of millons	Bryophyllum delagoense and B. daigremontanum X B. delagoense	Class 2
Myrica	Myrica faya	Class 1
Parkinsonia	Parkinsonia aculeata	Class 2, WONS
Parramatta grass	Sporobolus africanus, S. fertilis	Class 2
Parthenium weed	Parthenium hysterophorus	Class 2, WONS
Pencil willow	Salix chilensis syn. S humboldtiana	Class 3
Pepper tree	Schinus terebinthifolius	Class 3, SROC
Peruvian primrose	Ludwigia Peruvian	Class 1
Piper, spiked pepper	Piper aduncum	Class 1
Pond apple	Annona glabra	Class 2, WONS
Prickly acacia	Acacia nilotica	Class 2, WONS
Prickly pears	Opuntia spp (other than O. ficus-indica)	Class 2
Privet	Ligustrum lucidum and sinense	Class 3
Purple rubber vine	Cryptostegia madagascariensis	Class 3
Red sesbania	Sesbania punicea	Class 1
Rubber vine	Cryptostegia grandiflora	Class 2
Salvinia	Salvinia spp other than s. molesta	Class 1
Salvinia	Salvinia molesta	Class 2, SROC
Senegal tea plant	Gymnocoronis spilanthoides	Class 1
Serrated tussock	Naselle trichotoma	Class 1, WONS
Siam weed	Chromolaena odorata	Class 1
Sicklepod	Senna obtusifolia, tora and hirsuta	Class 2
Singapore daisy	Sphagneticola trilobata	Class 3
Thunbergia, laurel clock vine	Thunbergia annua, fragrans and laurifolia	Class 1
Tobacco weed	Elephantophus mollis	Class 2
Water caltrope, floating water chestnuts	Trapa species	Class 1
Water hyacinth	Eichhornia crassipes	Class 2
Water lettuce	Pistia stratiotes	Class 2
Water soldier	Stratiotes aloides	Class 1
Willows	Salix spp. other than S. babylonica, S. x calodendron, S. x reichardtii and S. chilensis	Class 1
Witch weeds	Striga spp. other than native spp	Class 1
Yellow bells	Tecoma stans	Class 3
Yellow burr-head	Limnocharis flava	Class 1
Yellow oleander (Captain Cook tree)	Thevetia peruviana	Class 3

Table 2 - Non-declared Plant Pests

Common Name	Botanical Name	Status
African love grass	Eragrostis curvular	IPL
African pigeon grass	Setaria sphacelata	IPL
African sedge	Cyperus involucratus	IPL
Alternanthera	Alternanthera dentate	VES
American elder	Sambucus Canadensis	IPL
American sea rocket	Cakile edentula	IPL
Angel's trumpet	Datura candida	VES
Arsenic bush	Senna septemptrionalis (was S. floribunda)	IPL
Arum lily	Zanthedeschia aethiopica	VES
Asthma weed or pellitory	Parietaria judaica	VES
Asystasia	Asystasia gangetica	NAL
Austroeupatorium	Austroeupatorium inulaefolium	VES
Balloon cotton bushes	Gomphocarpus fruiticosus, G. physocarpus	IPL
Balloon vine	Cardiospermum halicacabum	VES

Common Name	Botanical Name	Status
Balsams, bizzie lizzie	Impatiens walleriana	IPL
Barleria	Barleria priorities	WONS
Barnyard grasses	Echniochloa colona, E. crus-galli	IPL, VES
Bauhinia	Bauhinia purpurea, B. variegata	VES
Beach evening primrose	Oenothera drummondii subsp. Drummondii	VES
Blackberries	Rubus bellobatus, R. anadensi, R. ellipticus	IPL
Blackberry, Florida	Rubus argutus	VES
Black-eyed susan	Thunbergia alata	IPL
Blue billy goat weed	Ageratum houstonianum	IPL
Blue lotus	Nymphaea caerulea subsp. Zanzibarensis	IPL
Brazilian white bellflower, monkeys comb	Pthecoctenium crucigerum	VES
Brazilian cherry shrub	Eugenia uniflora	IPL, VES
Brazilian nightshade	Solanum seaforthianum	IPL
Broad leaved carpet grass	Axonopus compressus	VES
Buddleja	Buddleja madagascariensis	IPL
Buffalo grass	Stenotaphrum secundatum	IPL
Buffel grass, Mossman river grass	Cenchrus ciliaris, C. echinatus	IPL
Bulbil watsonia	Watsonia meriana var bulbillifera	IPL
Cadaghi	Corymbia torrelliana syn Eucalyptus	VES
Canadian goldenrod	Solidago Canadensis var. scabra	IPL
Candle, finger tree	Euphorbium candelabrum	VES
Canna lily	Canna indica	IPL
Cape ivy	Senecio tamoides	IPL
Capeweed	Arctotheca calendula	VES
Castor oil plant	Ricinus communis	IPL, VES
Century plant, foxtail plant, false sisal, elephant's ears	Agave Americana, attenuate, decipiens, indica	IPL, VES
Chinese burr	Triumfetta rhomboidea	IPL
Chinese empress tree	Paulownia tomentosa	IPL
Cluster pine, maritime pine	Pinus pinaster	VES
Cobblers pegs	Bidens pilosa	IPL
Cockscomb coral tree	Erythrina crista-galli	IPL, VES
Coco's/Queen palm	Syagrus romanzoffianum (Cocos nucifera)	IPL
Coffee	Coffea Arabica	IPL
Common indian hawthorn	Rhaphiolepis indica	IPL, VES
Cootamundra wattle	Acacia baileyana	VES
Coral berries	Ardisia crenata, crispa, humilis	VES, NPEWL
Coral berry, baby pepper	Rivinia humilis	IPL
Coral tree	Erythrina variegata	VES
Coral tree	Erythrina skyesii	VES
Corky passion vine	Passiflora suberosa	IPL
Cotoneaster	Cotoneaster spp	VES
Couch, Bahama grass introduced cultivars	Cyndon dactylon	VES
Cow itch, velvet bean	Mucuna pruriens	VES
Crofton weed	Ageratina adenophorum	IPL
Crownbeard	Verbesina encelioides	IPL
Crowsfoot grass	Eleusine indica	IPL, VES
Cuban hemp	Furcraea foetida	IPL
Cyperus sp	Cyperus teneristolon	WONS
Dense water weed	Egeria densa	IPL
Devil's apple	Solanum aculeatissimum	VES
Duranta	Duranta erecta	IPL, VES
Dwarf arrowhead	Sagittaria pygmaea	VES
Easter Cassia	Senna pendula var glabrata	IPL
Egyptian papyrus	Cyperus papyrus	VES
Fire flower yellow bells	Tecoma capensis	IPL, VES
Fishbone fern	Nephrolepsis cordifolia	VES
Fishpole bamboo	Phyllostachys aurea	IPL
Flame vine	Pyrostegia venusta	IPL
Flaxleaf fleabane, Canadian fleabane, tall fleabane	Conyza bonariensis, C. anadensis, C. sumatrensis	IPL
Foxglove	Digitalis purpurea	VES

Schedule 12 - Weed Species List

Common Name	Botanical Name	Status
Giant devils fig, tobacco bush	Solanum hispidulum, S. erianthum and torvum	IPL
Giant reed	Arundo donax	IPL
Gloriosa lily	Glorisa superba, rothschildiana	IPL
Glycine	Neonotonia wightii	IPL
Golden chain tree	Laburnum anagyroides	VES
Golden rain tree	Koelreuteria elegans and paniculata	IPL, VES
Grader grass	Themeda quadrivalvis	IPL, VES
Greenleaf desmodium	Desmodium intortum	IPL
Guinea grass	Panicum maximum	IPL
Hairy wandering jew	Commelina benghalensis	VES
Hawthorn	Crataegus monogyna	VES
Hemlock	Conium maculatum	VES
Hemp	Furcraea selloa	IPL
Hiptage	Hiptage benghalensis	IPL
Indian siris	Albizia lebbeck	VES
Inkweed	Phytolacca octandra	IPL
Jacaranda	Jacaranda mimosifolia	IPL
Japanese honey suckle	Lonicera japonica	IPL
Japanese sunflower	Tithonia diversifolia	IPL
Jointed rush	Juncus articulatus	IPL, VES
Kikuyu grass	Pennisetum clandestinum	IPL
Kudzu	Pueraria lobata	IPL
Leaf cactus	Pereskia aculeate	NAL
Leucaena	Leucaena leucocephala	IPL
Lippia	Phyla canescens	IPL
Loquat	Eriobotrya japonica	IPL, VES
Lotus lily	Nelumbo nucifera	VES
Ludwigia	Ludwigia longifolia	VES
Malabar plum, rose apple	Syzygium jambos	NPEWL, VES
Mexican sunflower	Tithonia rotundifolia	VES
Mexican yellow lily	Nymphaea mexicana	IPL
Mile a minute, morning glory	Ipomea caira and indica	IPL, SROC
Milkweed	Euphorbia heterophylla	IPL
Mistflower	Ageratina riparium	IPL
Molasses grass, red natal grass	Melinus minutifolia and repens	IPL
Moon flower morning glory, cyrpress vine	Ipomoea alba and quamoclit	VES
Mosso Bamboo	Phyllostachys heterocycla pubescens	VES
Mother in laws tongue	Sanseviera trifasciata	IPL
Mullumbimby couch	Cyperus brevifolius	IPL
Murraya, mock orange	Murraya paniculata	IPL, VES
Navua sedge	Cyperus aromaticus	VES
Night blooming cactus	Hylocereus undatus	VES
Noogoora and Bathurst burr	Xanthium pungers, X spinosum	VES
Nut grass	Cyperus rotundus	
Ochna or mickey mouse plant	Ochna serrulata	IPL
Oleander	Nerium oleander	VES
Olive	Olea europaea	IPL, VES
Paddy's Lucerne	Sida rhombifolia	IPL, VES
Painted spurge	Euphorbia cyanthophora	IPL
Palm leaf setaria	Setaria palmifolia	IPL
Pampas grass	Cortaderia selloana	IPL, VES
Para grass	Brachiaria mutica	IPL
Parrots feather	Myriophyllum aquatioum	IPL
Paspalum grass, broad leaf paspalum	Paspalum conjugatum, dilatatum, mandiocanu, notatum	IPL
Passionfruit	Passiflora edulis, subpeltata	IPL
Pennywort	Hydrocotyle bonariensis	VES
Peppercorn tree, pepperina	Schinus molle	VES
Perennial horse gram	Macrotyloma axillare	IPL
Perennial ragweed	Ambrosia psilostachya	VES
Pine tree	Pinus radiata	VES, USL, PMP
Pine tree, slash pine	Pinus caribbae, P. elliotti, P. patula	VES

Common Name	Botanical Name	Status
Plantains	Plantago spp.	VES
Poinsettia	Euphorbia pulcherrima	VES
Polka dot plant	Hypoestes phyllostachya	IPL, VES
Praxelis	Praxelis clematidea	NAL
Purple succulent	Callisia fragrans	IPL
Queensland blue couch / crab and pangola grass	Digitaria didactyla, D. eriantha	IPL
Rambling dock	Acetosa sagittata	IPL
Red cestrum	Cestrum elegans	VES
Red cotton bush	Asclepias curassavica	IPL
Rhodes grass	Chloris gayana	IPL
Rhus tree	Toxicodendron succedaneum	VES
Romerillo (toxic groundsel)	Baccharis coridifolia	VES
Round-leaf cassia	Chamaecrista rotundifolia	IPL
Rubber tree	Ficus elastica	VES
Ruellia	Ruellia malacosperma	IPL, VES
Sacramento burr	Triumfetta semitriloba	VES
Saffron thistle	Carthamus lanatus	VES
Sagittaria arrowhead	Sagittaria graminea var. platyphylla	IPL
Salvia, red salvia	Salvia coccinea	IPL
Scotch broom	Cytisus scorparius	VES
Sea tassel	Ruppia maritima	IPL
Sensitive plant	Mimosa pudica	IPL
Shrubby stylo	Stylosanthes scabra	IPL
Siatro	Macroptilium atropurpureum	IPL
Signal grass	Brachiaria decumbens	IPL, VES
Silverleaf desmondium	Desmodium uncinatum	IPL
Sisal	Agave sisalana, A. vivipara	IPL
Squirreltail	Justicia betonica	IPL
Stinging nettles	Urtica spp.	VES
Stinking rodger	Tagetes minuta	IPL, VES
Stinky passionfruit	Passiflora foetida	IPL
Strawberry guava, common guava	Psidium guajava	IPL
Swamp fox tail	Pennisetum alopecuroides	VES
Sweedish ivy	Plectranthus nummularius	VES
Sword pear	Acanthocereus tetragonus	IPL
Taiwan lily	Lilium formosanum	IPL
Taro	Colocasia esculentia	IPL
Taro, blue taro	Quanthosma violaceum	VES
Telegraph weed	Heterotheca grandiflora	VES
Thornapples	Datura ferox, D. meteloides, D. tatula, D. stramonium	VES
Tickseed	Coreopsis laceolata	VES
Tipuana	Tipuana tipu	IPL
Toad flax	Linaria vulgaris	VES
Tree of heaven	Ailanthus altissima	IPL
Tree tobacco	Nicotiana glauca	VES
Tropical pickerelweed	Pontederia rotundifolia	VES
Umbrella sedge	Cyperus eragrostus	VES
Umbrella tree	Schefflera actinophylla	VES
Vinca, pink periwinkle	Catharanthus roseus	IPL
Wait a while, thorny poinciana	Caesalpinia decapetala	IPL
Wandering jew	Tradescantia albiflora	IPL
Water pennywort	Hydrocotyle ranunculoides	VES
Water plantain	Alisma lanceolatum	VES
Water poppy	Hydrocleys nymphoides	VES
Watercress	Nasturtium officinale (syn. Rorippa nasturtium-aquaticum)	IPL
Whisky grass	Andropogon virginicus	IPL
White bladder flower, moth vine	Araujia sericifera	IPL
White mulberry, mulberry	Morus alba, M. nigra, M. rubra	IPL, VES
Wild ginger, ginger lily	Hedychium coronatum, H. gardnerianum	IPL, VES
Wild goose plum	Prunus munsoniana	IPL
Wild tobacco	Solanum mauritianum	IPL

Common Name	Botanical Name	Status
Wild zinnia	Zinnia peruviana	IPL
Wisteria	Wisteria sinensis, W. floribunda	VES
Yellow oleander	Cascabela thevetia	VES
Yorkshire fog	Holcus lanatus	VES
Zebrina	Tradescantia zebrine	IPL

Note -

Summary of Table 1 and 2 sources, class status and acronyms used in this Schedule -

Table	Source
Table 1 – State and Locally Declared Pest Plants	This list documents pest species prescribed relevant to the local government area as - ■ Declared pests listed by the *Land Protection (Pest and Stock Route Management) Act 2002*; ■ Pest plants within *Local Law No. 13 – Control of Pests*.
Table 2 – Non-declared Pest Plants	This list documents pests that have been identified as species of concern to the local government as they are either - ■ known environmental weeds in the local government area or an adjoining local government area; ■ known environmental weeds in other areas of the State or Australia with similar conditions to the local government area; ■ potential weeds which require monitoring; ■ weeds known to be poisonous or cause allergies to the majority of the community.
Status	**Meaning of Status**
Class 1	Refers to declared pests which are not commonly present or established in the State, and if introduced would cause a serious economic, environmental or social impact. Class 1 pests are subject to eradication. Land owners must take reasonable steps to keep land free of these pests.
Class 2	Refers to declared pests which are established in the State and have, or could have, a substantial economic, environmental or social impact. The management of these pests requires coordination and they are subject to local government, community or owner led programs. Landowners must take reasonable steps to keep land free of these pests.
Class 3	Refers to declared pests which are established in the State and have, or could have, a substantial economic, environmental or social impact. A pest control notice can only be issued for land that is, or is adjacent to, an environmentally significant area. Thus, the impact of species in this class is primarily environmental.
Acronym	**Meaning of Acronym**
FA 1994	*Fisheries Act 1994*
HR	*Health Regulation 1996*
IPL	Refers to the list of 200 most invasive plants in South East Queensland as assessed by G. Batianoff and D. Butler in 2002.
LL13	*Local Law No. 13 - Control of Pests*
NAL	National Alert List
NKTP	Refers to pests that are recognised as a National Key Threatening Process
NPEWL	National Potential Environmental Weed List
PPA 1989	*Plant Protection Act 1989*
SROC	Refers to pests listed by the *Southern Region of Councils Pest Management Plan*
USLPMP	*Unallocated State Land Pest Management Plan*
VES	*Redland City Council Vegetation Enhancement Strategy*
WONS	Weed of National Significance

Part 10 - Priority Infrastructure Plan

Note -

Provisions relating to the Priority Infrastructure Plan (PIP) and Infrastructure Charges Schedules are not currently available for inclusion in the Redlands Planning Scheme Version 2 - September 2008. The content of this part will be subject to a future planning scheme amendment.

this page purposely
left blank

Part 11 - Planning Scheme Policies

Note -

Summary of Planning Scheme Policies.

Planning Scheme Policies

- 1 - Bushfire Hazard
- 2 - Community Consultation
- 3 - Contributions and Security Bonding
- 4 - Ecological Impacts
- 5 - Environmental Emissions
- 6 - Emerging Urban Community Structure Plans
- 7 - Flood Prone, Storm Tide and Drainage Constrained Land
- 8 - Housing
- 9 - Infrastructure Works
- 10 - Outdoor Dining
- 11 - Rural Land Uses
- 12 - Social and Economic Impact Assessment
- 13 - Telecommunications Facility
- 14 - Waterways, Wetlands and Moreton Bay
- 15 - Landslide Hazard
- 16 - Safer By Design
- 17 - Streetscape Design Manuals

this page purposely
left blank

Part 11 - Planning Scheme Policies

Planning Scheme Policy 1 - Bushfire Hazard

1.1 Purpose

(1) The purpose of this policy is to set out requirements for the preparation and submission of development applications, including technical reports, for premises subject to bushfire hazard to -

(a) minimise the density of uses or other development at risk from bushfire hazard so as to reduce the number of people and properties subject to the risk;

(b) ensure uses and other development are sited, designed and managed to minimise the risk of bushfire to people and property.

1.2 Applicabilit y

This policy applies when a proposed development is situated on premises affected by the Bushfire Hazard Overlay Map and Code.

1.3 Formulating a Development Proposal

(1) Bushfire hazard assessment and reporting should be undertaken before determination of a potential development scenario.

(2) Recommendations of the reports are required to ensure the resulting development is compatible with the risk of bushfire and is fully understood by the applicant and premises operator/occupier.

(3) It is strongly recommended that applicants arrange a pre-lodgement meeting to discuss matters to be included in any reports and the timing of lodgement of the report.

1.4 Bushfire Hazard Mapping

(1) The Bushfire Hazard Overlay Map is based on hazard mapping developed for the mainland and Southern Moreton Bay Islands by the local government and the Queensland Fire and Rescue Service (QFRS).

(2) The methodologies used for determination of the hazard is based on Appendix 3 of *SPP 1/03 - Guidelines - Mitigating the Adverse Impacts of Flood, Bushfire and Landslide* and has been modified in accordance with QFRS recommendations for the local area.

(3) The hazard mapping for North Stradbroke Island is based on mapping produced by the State Government.

1.5 Bushfire Hazard Assessment

(1) In accordance with the Bushfire Hazard Overlay Code site specific bushfire hazard assessment is required when the premises is affected by medium or Southern Moreton Bay Islands bushfire hazard to ensure the proposal is located on land with the least risk and where management of the hazard is achievable.

(2) Bushfire hazard assessment is conducted in accordance with the methodology described in Appendix 3 of *SPP 1/03 Guidelines - Mitigating the Adverse Impacts of Flood, Bushfire and Landslide*.

(3) The assessment manager should be consulted prior to undertaking any study using alternative methodologies.

1.6 Bushfire Management Plans

(1) In accordance with the Bushfire Hazard Overlay Code site specific bushfire hazard assessment and a management plan is required when the premises is affected by -

(a) high bushfire hazard; or

(b) medium or Southern Moreton Bay Islands bushfire hazard and is for the purposes of community infrastructure; or

(c) high, medium or Southern Moreton Bay Islands bushfire hazard and involves the manufacture or storage of hazardous materials in bulk; or

(d) high bushfire hazard and for the purpose of reconfiguration or uses that involve numerous buildings.

(2) The Bushfire Management Plan (BMP) identifies strategies for mitigating the impacts of bushfire on life, property and the environment. This includes identifying specific risk factors associated with the development, planning for the separation of at-risk elements and potential hazards and providing access and treatments to facilitate an effective response to bushfire.

(3) Mitigation measures need to consider the four main factors of bushfire attack as detailed in *Protecting your Home Against Bushfire Attack* (DLGPS&R, 2000) -

(a) burning debris;

(b) radiant heat;

(c) direct flame contact;

(d) wind.

(4) The BMP is prepared by a suitably qualified professional with technical expertise in the identification and mitigation of bushfire hazard. Suitable professionals may include those in the environmental management, landscape architecture, architecture, town planning and civil engineering fields.

(5) Consultation with the local government, responsible Rural and/or Urban Fire Brigade, and managers of adjacent parks or reserves is necessary in the preparation of a BMP.

(6) It is also desirable to consult other agencies or individuals, such as previous owners of the site or neighbours, who may have local knowledge of the severity and nature of the bushfire hazard.

(7) A comprehensive BMP -

(a) includes an assessment of the nature and severity of the bushfire hazard affecting the site. This should comprise a detailed site specific bushfire hazard assessment using methodology set out in Appendix 3 of *SPP 1/03 Guideline Mitigating the Adverse Impacts of Flood, Bushfire and Landslide;*

(b) addresses other site specific factors that are important in devising suitable bushfire mitigation strategies. These factors could include matters such as -
(i) likely direction of bushfire attack;
(ii) environmental values that may limit mitigation options;
(iii) locations of evacuation routes and/or safety zones;

(c) assesses the specific risk factors associated with the development proposal, including matters such as -
   (i) the nature of activities and materials to be conducted/stored on the premises;
   (ii) numbers and types of persons likely to be present;
   (iii) warning and/or evacuation requirements;

(d) addresses each of the specific outcomes and associated probable solutions in the Bushfire Hazard Overlay Code and recommends mitigation actions for the proposed development including -
   (i) road and lot layout for reconfiguration;
   (ii) fire trails and fire breaks;
   (iii) accessways, driveways and evacuation routes;
   (iv) land uses;
   (v) site layout;
   (vi) fuel reduction areas and buffers;
   (vii) water supply;
   (viii) landscaping;
   (ix) fire fighting requirements including infrastructure;
   (x) any other specific measures such as external sprinkler systems and alarms;
   (xi) purchaser/resident education and awareness programs;
   (xii) ongoing maintenance and response awareness programs.

1.7 Development Involving Hazardous Materials Manufactured or Stored in Bulk

(1) Hazardous materials in bulk for the purposes of bushfire hazard are those detailed in SPP 1/03 as being hazardous materials defined in the *Dangerous Goods Safety Management Act 2001*, in quantities that -

   (a) would be equivalent to or exceed the minimum quantities set out to determine a Large Dangerous Goods Location in the *Dangerous Goods Safety Management Regulation*; or

   (b) would require a licence for a magazine for the shortage of an explosive under the *Explosives Regulation 1955*.

(2) Radioactive substances and infectious substances are excluded from the definition of hazardous materials for the purposes of the SPP.

(3) Development involving hazardous materials manufactured or stored in bulk has the potential to -

   (a) be significantly affected by bushfire hazard;

   (b) significantly assist the progression of bushfire.

(4) Where a development requires a Flammable and Combustible Licence under the *Dangerous Goods Act 2001,* it is recommended that application for that licence be made at the same time as the development application to ensure all relevant issues are addressed in an integrated manner.

(5) Depending on design or production capacity chemical manufacture and/or storage may constitute an Environmentally Relevant Activity as defined under the *Environmental Protection Act 1994*. This use or component of a use is required to be assessed for environmental impacts in accordance with the *Environmental Protection Act 1994* and the *Redland City Council Operator's Compliance Guidelines*. Further advice on this matter can be provided at the time of the pre-lodgement meeting.

1.8 Road and Lot Layout

Diagram 1 - Preferred road layout in and adjoining bushfire hazard areas

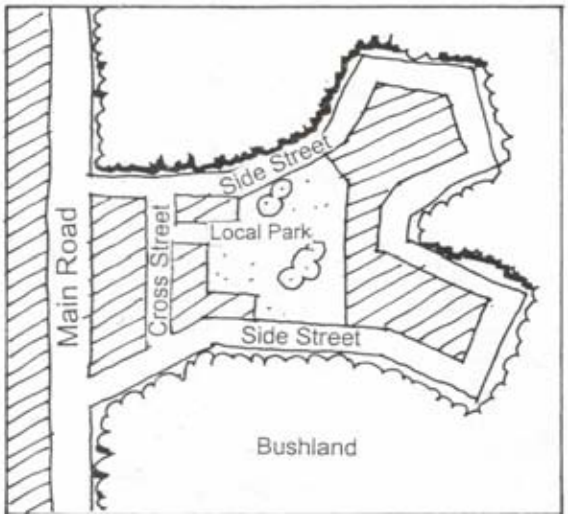

Acceptable – perimeter road system provides separation between hazard and assets; access for fire fighters, and provides two directions for evacuation.

Diagram 2 - Unacceptable road layout in and adjoining bushfire hazard areas

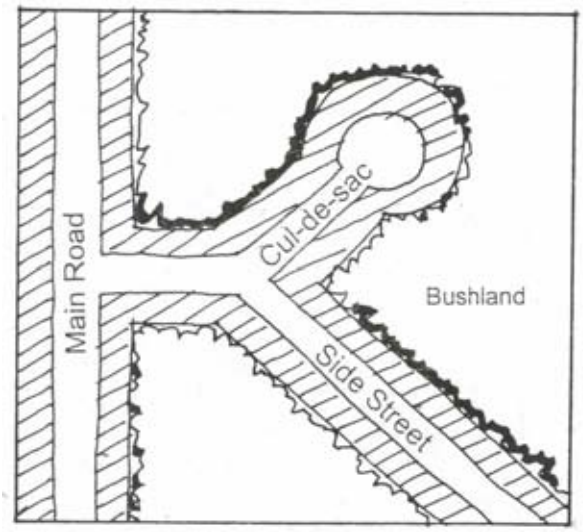

Unacceptable – closed road system congregates evacuation and response traffic, access for fire response restricted.

1.9 Building Siting and Development Envelopes

(1) The way a building is sited on land is a basic factor influencing the ability to protect people and property. As the pattern of fires is predictable, it is possible to determine the most favourable areas to minimise impacts. For example -

(a) check data about previous fires in the area to determine the possible directions a fire would travel;

(b) be aware most bushfires occur during dry conditions, particularly in times of hot temperatures and low humidity, and are often accompanied by strong winds;

(c) remember fires accelerate going up hill and decrease in speed traveling down hill.

(d) hanging a building out over the hazard will increase the risk such as a pole house with timber decks will be much more exposed than one set into the slope;

(e) siting the structures downhill from the hazard reduces the risk, and this is reflected in the site-specific assessment method. Setbacks are still necessary to avoid falling trees and debris rolling down hill.

(2) There are two key principles to be considered in siting a building in a bushfire hazard area -

(a) avoiding higher risk situations, particularly locations with a combination of slope and certain aspects;

(b) maximising the setbacks from hazardous vegetation (refer fuel reduction areas above).

(3) On larger lots it may be possible to site buildings in an area depicted on bushfire hazard assessment maps as lower bushfire risk.

(4) Irrespective of the severity of hazard in any bushfire hazard assessment, combinations of slope and aspect on individual sites should be considered. Diagram 3 illustrates the relative bushfire safety of building site locations based on slope and aspect considerations.

(5) The order of preference is low flat sites, sites set into Southerly or South East slopes, sites at the bottom of more exposed West and North West slopes. The most dangerous sites are on or at the top of West or North West slopes. Building sites should also avoid the head of gullies with Westerly aspects, because fire winds funnel up such sites.

(6) Although fires may tend to come from a particular direction, local variations are always likely and protection for the southern and eastern side of developments must never be overlooked.

Diagram 3 - Bushfire safety based on slope and orientation

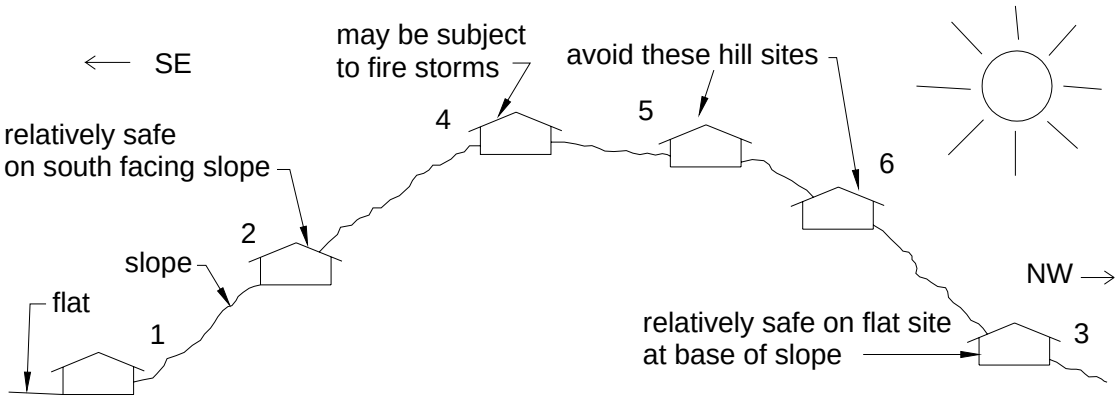

Note -

House sites numbered in order of degree of fire safety - 1 being the safest and 6 being the most hazardous.

(7) Siting should also -

(a) avoid ridge tops;

(b) avoid steep slopes, particularly upper slopes and narrow ridge crests;

(c) avoid locations where adequate fuel reduction areas and buffers can not be provided within the property;

(d) locate buildings where vehicular access from two directions can be provided away from identified hazard areas wherever possible;

(e) build on level ground wherever possible;

(f) where buildings must be constructed on sloping land, incorporate cut-in benches rather than elevated or above fill;

(g) avoid raised floors in preference to concrete slabs;

(h) locate the building near the property entrance for easier access/egress, refer to Diagram 4;

(i) keep services underground, particularly electricity;

(j) locate on-site water storage near buildings.

(8) Development envelopes should be sited in the same manner to the above. Development envelope size and shape is designed to allow for the allocation of fuel reduction areas and buffers to assets within the building envelopes.

Diagram 4 - Preferred Site Layout

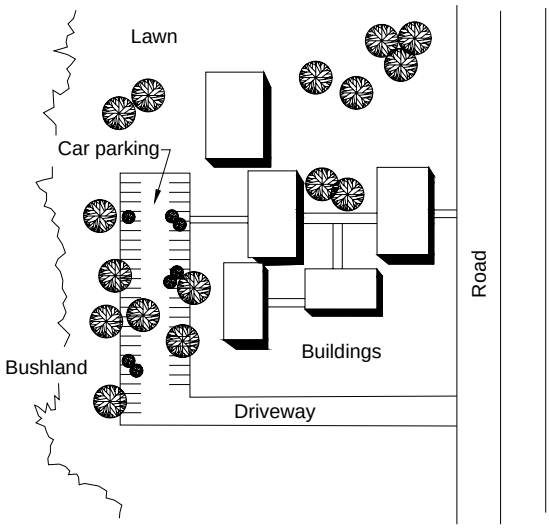

Consideration should be given to placing least susceptible land uses closer to the likely direction of fire attack than more susceptible land uses.

1.10 Construction of Buildings in Bushfire Hazard Areas

(1) Building design can have a significant impact on the likelihood of damage occurring due to bushfire.

(2) Compliance with *Australian Standard 3959:1999 - Construction of Buildings in Bushfire Prone Areas* is required when a premises is affected by Southern Moreton Bay Islands Bushfire Hazard and fuel reduction opportunities are limited due to lot size.

(3) Incorporation of principles contained in the above standard are encouraged for all buildings within high, medium and SMBI bushfire hazard affected premises.

(4) The document *Protecting your home against bushfire attack* (DLGPS&R, 2000) provides further guidance on how a building should be designed.

(5) In addition, it is recommended that -

(a) external gas cylinders are shielded from possible exposure to radiant heat by the construction of a masonry shield;

(b) building elevation and roof pitches are minimised;

(c) all external gaps are less then 2mm;

(d) timber decking is kept to a minimum.

1.11 Landscaping

(1) Landscaping should be designed to assist in creation of buffers and fuel reduction areas.

(2) Consideration should be given to surround isolated buildings with a wide driveway or paths of gravel, concrete, pavers etc or mown areas.

(3) Landscaping, particularly using mulch, adjacent to buildings can facilitate spot fires.

(4) Low flammability plant species indigenous to the local government area should be used and are identified within Table 2 of the Bushfire Hazard Overlay Code.

1.12 Fuel Reduction Areas

(1) Fuel reduction areas (FRA) require the gradual removal of fuel between development and a hazard and are located to provide -

(a) areas of reduced fuel to slow advancing fire;

(b) adequate access for fire fighting and other emergency vehicles;

(c) for the retention of environmental values.

(2) FRA types for the local government area were developed over time as land management agencies and the community addressed the separation of bushland from private and public assets with regard to bushfire risk management.

(3) FRA types have been classified and are used to demonstrate the flexibility required by a land manager in balancing the built environment with the natural environment.

(4) A FRA consists of varying widths of a slashed zone, and a medium fuel removal zone.

(5) General characteristics of these FRA include -

(a) in the slashed zone -
(i) removal of all understorey plants and ground covers;
(ii) retention of trees with a trunk diameter at the base of greater than 15cm;
(iii) allowance for the movement of fire tender within the FRA in all situations;

(b) in the medium fuel removal zones (MFR) -
(i) retention of trees and groundcovers;
(ii) selective removal of plants that will be less than 1.5 metres in height on maturity.

(6) Minimum FRA's are specified in Table 1 of the Bushfire Hazard Overlay Code.

(7) Additional types may be appropriate as determined by a bushfire management plan for the development and are set out in Table 1 of this policy.

(8) Distances and treatments should be -
(a) used as a guide and may be varied at the discretion of the local government in consideration of site specific hazards and significant environmental features. For this reason all 7 types of fuel reduction areas are detailed;
(b) measured from any buildings or structures associated with the development.

(9) On lots greater then 2500m^2, buildings should be sited so that the minimum setbacks from hazardous vegetation detailed for the FRA can be achieved.

Table 1 - Fuel Reduction Area Descriptions

FRA Type	Representation	Description
1	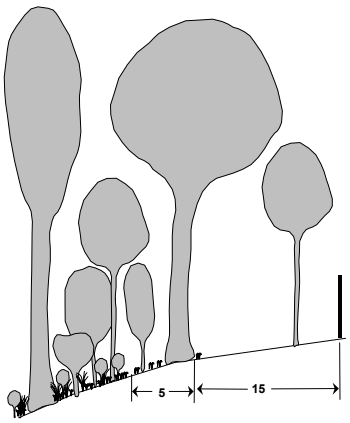	Requires the removal of canopy, understorey and groundcover and installation of measures to minimise the erosion of the bare soil and direct stormwater run-off. Is only necessary where the fire risk is very high due to highly combustible fuel and the slope of the land would allow for a high rate of spread and a high flame height in periods of high fire danger, and where the risk to life and infrastructure is high. **Zone widths -** ■ Slashed - 15 metres ■ MFR - 5 metres It is noted that this type of FRA results in substantial impact on environmental values and allows for increased opportunities for environmental weeds, soil erosion and other impacts. Erosion control measures should be constructed and maintained in all situations.
2	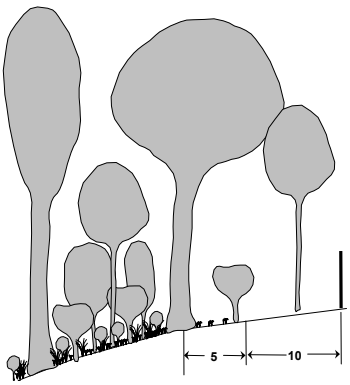	Requires the removal of the understorey and ground cover but retains some of the canopy. This will depend on the slope, vegetation structure and the type of available fuel. The FRA is used in locations of medium slope with combustible material and where the risk to people and property is high. The slashed zone allows for the easy movement of a fire tender within the FRA in all situations and allows for the re-growth of grasses that need regular slashing or mowing particularly during the fire season. **Zone widths -** ■ Slashed - 10 metres ■ MFR - 5 metres It is noted that this type of FRA results in substantial impact on environmental values and allows for increased opportunities for environmental weeds, soil erosion and other impacts. Erosion control measures should be constructed and maintained in all situations.

FRA Type	Representation	Description
3	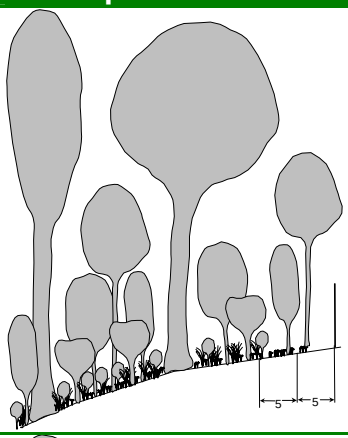	Requires the removal of the understorey and ground cover but retains canopy vegetation. This FRA is used in locations of medium to low slope, with combustible material and where the risk to people and property medium to low. The slashed zone allows for the easy movement of a fire tender within the FRA in all situations and allows for the re-growth of grasses that need regular slashing or mowing particularly during the fire season. **Zone widths -** ■ Slashed - 5 metres ■ MFR - 5 metres Erosion control measures are required.
4	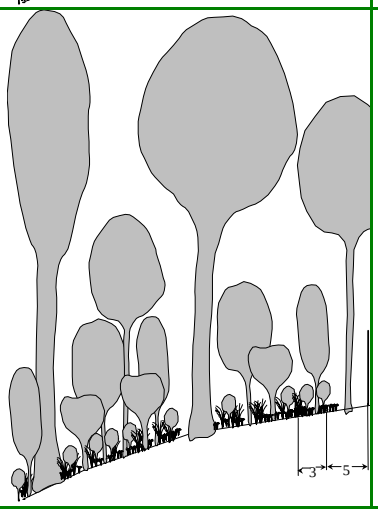	Requires the removal of the understorey and the slashing of the ground cover. This FRA is used in locations of minimal slope with low fire risk to people or property. It may form internal FRAs within bushland areas where vehicle access is required. Access is provided for fire tenders around the canopy trees within this FRA. **Zone widths -** ■ Slashed - 5 metres ■ MFR - 3 metres Natural drainage lines are maintained and the grasses regularly mowed.
5	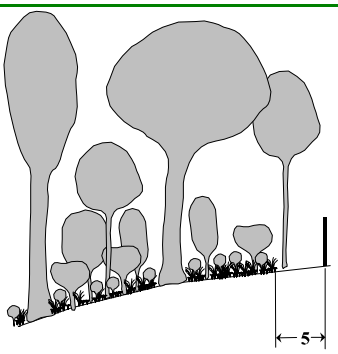	Requires the removal of understorey and fire fuels with the slashing of the groundcovers. This FRA type is used in locations of minimal slope and no risk to property. Fire prevention activities are conducted from this FRA, such as prescribed burns, and access is required for fire tenders within the FRA. This FRA is used in areas with environmental values such as riparian areas, where minimal disturbance to values is required. **Zone widths -** ■ Slashed - 3 metres ■ MFR - 2 metres This FRA may provide access in bushland areas such as walking tracks, bikeways, horse trails.
6	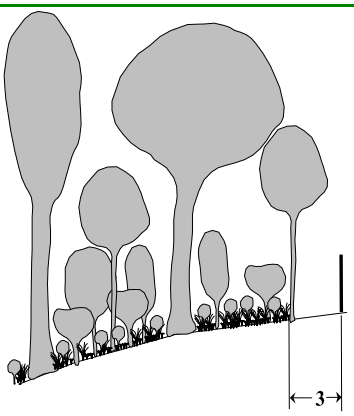	Requires the slashing of the groundcovers and the thinning of the understorey to form a FRA of 3 metres. This FRA would receive regular maintenance. This FRA is used in areas of no or minimal slope or where there is no fire risk and the FRA is used for fire prevention, such as prescribed burns. This FRA is used in areas of environmental value or cultural significance, where minimal disturbance is required. Vehicle access is not required.

FRA Type	Representation	Description
7	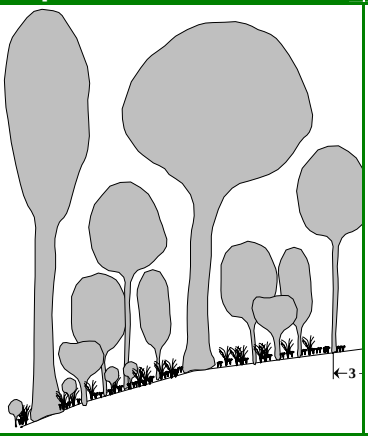	Allows for the thinning of the understorey and the minimal slashing/mowing of the groundcovers. The nominal width of this thinned area would be up to 3 metres. This FRA is used in areas of no or minimal slope or where there is no fire risk and the FRA is used for fire prevention such as prescribed burns, purposes. This FRA is used in areas where the adjacent land has a cleared well maintained open area between the hazard and any building or structure.

1.13 Buffer Zones

(1) Barriers and buffer zones around buildings will assist in slowing bushfire. Barriers may include planting suitable trees, vegetation and building permanent barriers such as low stone or masonry walls. These barriers or buffers assist in protecting buildings from possible attack by burning debris, heat radiation and direct flame contact.

(2) Between the barriers and buildings, a 'buffer zone' is created by reducing the number of combustible items near, refer to Diagram 5. This means that if burning debris passes through the barriers, there is minimal opportunity to create further outbreaks and provides an opportunity to put out spot fires.

(3) Consideration should be given to providing a grassed area or gravel, concrete or paved driveway in proximity to isolated buildings or mown areas.

Diagram 5 - Creation of buffer zones between buildings and hazardous vegetation

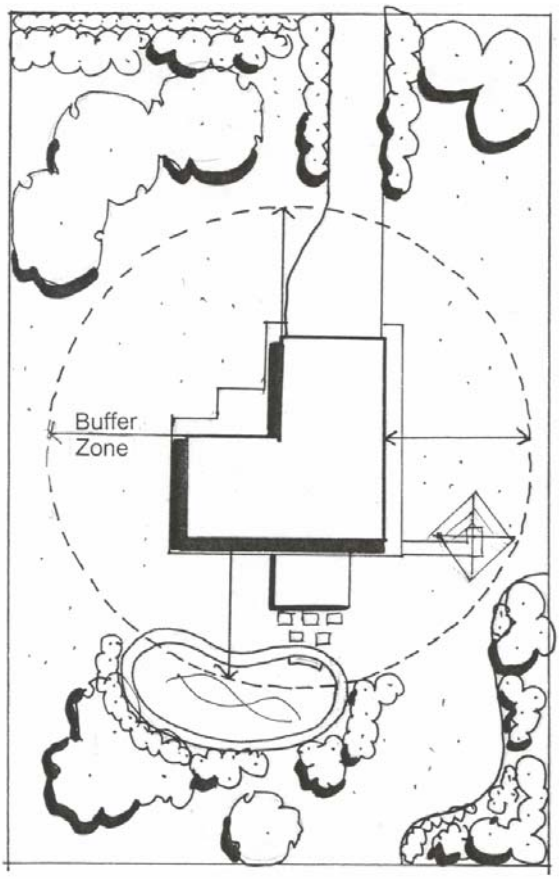

Planning Scheme Policy 2 - Community Consultation

2.1 Purpose

(1) Undertaking consultation, especially with immediate neighbours, is recommended in the formulation of any development proposal. Consultation can potentially minimise concerns, conflicts, misconceptions or misunderstandings of a development proposal and minimise the potential for appeals.

(2) Community consultation may be requested as additional information in support of a planning application where this additional information takes the form of -

(a) an environmental impact statement or management plan; or
(b) a social or economic impact assessment report or management plan; or
(c) a planning report; or
(d) a traffic impact assessment report.

(3) The advantages of consulting with the community are -

(a) it helps to identify community concerns and values;
(b) it informs the community of possible changes and actions they can take;
(c) a well informed and involved community is less likely to object to a development if their views are heard and responded to;
(d) local knowledge can help improve a development proposal, such as making it more marketable, providing information on local history, identifying available local resources;
(e) it helps to establish credibility by overcoming mistrust and cynicism in the community;
(f) it can provide data to help inform the assessment of community impacts;
(g) it helps balance and improve decision making, delivering better outcomes for all parties;
(h) to establish positive relationships with the community that benefit developers and the local government;
(i) a reduction in timeframes for the formal application process, with an informed community aware of the proposal.

2.2 Applicability

This policy applies to all development applications where community consultation is required.

2.3 Consultation Principles

(1) To be effective and credible, consultation programs should be carefully planned and implemented. Poor consultation can be more damaging than no consultation. To ensure quality consultation is employed, a program should satisfy the following principles -

(a) people affected by a development proposal or project have the right to be informed and to have the opportunity to participate;
(b) the consultation program should be -
  (i) interesting;
  (ii) equitable, in terms of physical access and access to information;
  (iii) inclusive of all stakeholders, particularly marginalised groups;
  (iv) adequately resourced;
(c) consultation should commence early and as part of the development formulation and assessment process rather than being a one off event, such as at the public notification stage of the IDAS application process;
(d) the history of previous consultation programs should be taken into account;
(e) the purpose, expected outcomes and decision making process should be clearly communicated to all participating parties;
(f) a diverse range of consultation techniques should be implemented to maximise opportunity for participation. These techniques should be a reflection of the nature and scale of the proposed development;

(g) consultation objectives should be matched with appropriate techniques;
(h) the consultation program should be constantly evaluated against its objectives and modified accordingly to meet changing needs;
(i) participants should be informed how the issues raised through consultation are addressed in the development proposal and outcome.

2.4 Format Of The Consultation Program

The processes and results of the consultation program should be documented and form part of application documentation. It is recommended that the following steps be undertaken in completing the consultation program.

2.4.1 Clarify the Purpose

(1) Identify what the consultation is intended to achieve and communicate this clearly to everyone involved. In planning the consultation program and determining the level of consultation needed, the following criteria should be considered -

(a) the significance of anticipated economic, social and environmental impacts;
(b) the extent of controversy anticipated;
(c) the nature of the community affected;
(d) the nature and extent of the proposal;
(e) who is responsible for decision making and how consultation will inform decision making;
(f) the timeframe and resources available;
(g) the type of information that needs to be made available and/or communicated;
(h) the reasons for the scope and type of consultation to be undertaken;
(i) the stages of the community impact assessment process at which consultation is to be undertaken;
(j) the techniques to be used;
(k) the process by which the program can be adapted to address issues and needs as they arise;
(l) how feedback will be given to all those with an interest;
(m) how information gained will be documented.

2.4.2 Identify Whom to Involve

(1) Identify the communities who need to be consulted. These include -

(a) geographically based communities such as neighbours, people resident in the street, the wider neighbourhood;
(b) interest groups such as workers, residents, visitors, housing agencies, people with disabilities, teenagers, cyclists, Indigenous communities, service providers;
(c) new communities such as greenfield development, urban infill sites, new industrial estates. It can be difficult to involve people who are not yet resident. An effective alternative is to consult people who now occupy recently developed areas to learn from them what impacts need to be managed.

(2) Affected communities often include people from a geographic area as well as non-geographical communities of interest. These include -

(a) Local Street Impact - Developments classified in this category have impacts on properties adjacent to, and across the street from the site. Examples of these developments may include housing for older people and people with disabilities.

(b) Immediate Neighbourhood Impact - Developments in this category include all developments in the local street impact category and developments that would have impacts for a larger part of the street where the site is located. Examples of these developments include childcare facilities, welfare premises and youth centres.

(c) Wider Impact - This category includes developments in the previous two categories and developments that may have impacts beyond the immediate or local area. These developments may be of interest to interest groups across the planning scheme area. Examples of these developments may include -

(i) crematoriums and funeral parlours;
(ii) expansion or development of educational facilities or health facilities;
(iii) new residential suburbs or housing developments that significantly change population size;
(iv) large cultural or religious centres;
(v) licensed premises/night club;
(vi) nursing homes and hospices;
(vii) multiple dwelling developments in excess of ten units.

(d) Popular Interest Groups - This category includes developments that may have an impact on communities of interest such as service providers, youth, cultural groups and cyclists. Examples of these developments include -

(i) housing for older people and people with a disability;
(ii) major alterations or new centre uses;
(iii) new residential suburbs or housing developments that significantly change population size;
(iv) large cultural or religious centres.

2.4.3 Establish a Time Frame

Ensure that consultation events occur at appropriate times to enable the information gathered to inform the critical decision making stages.

2.4.4 Decide on the Resource Requirements

Ensure that there are sufficient resources available to support the consultation program.

2.4.5 Plan the Process

Plan a program to meet the requirements defined in the preceding steps. Keep the program flexible to enable it to be adjusted to changing needs as the process unfolds. Table 1 - Techniques to achieve objectives based on the community affected, describes the types of techniques that could be used to achieve different objectives. It also indicates the community type that each of these techniques is suited to.

Table 1 - Techniques to achieve objectives based on the community affected

Technique	Objective	Affected Community			
		Local street impact	Immediate neighbourhood impact	Wider impact	Particular interest group
Letters	Informing the community	✓	✓		✓
Brochures and information updates/leaflets	Informing the community	✓	✓	✓	✓
Media releases	Informing the community			✓	
Signage on land	Informing the community			✓	
Display	Informing the community			✓	
Questionnaires	Informing the community and obtaining specific feedback			✓	✓
Discussions with adjoining property owners	Information exchange, involving the community and obtaining some feedback	✓	✓	✓	
Personal interviews	Information exchange, involving the community and obtaining some feedback	✓			✓
Street meetings	Information exchange, involving the community and obtaining some feedback		✓		
Community meetings	Information exchange, involving the community and obtaining some feedback				✓
Workshops	Information exchange, educating, involving the affected community and obtaining specific and broad feedback				✓
Community advisory committee	Information exchange, involving the community, support building and obtaining feedback on a wide range of issues			✓	✓

2.4.6 Implement and Monitor

Continually evaluate how well the consultation program is achieving its stated objectives and adjust events, techniques, timing or resources as required.

2.4.7 Present the Results

(1) Show how the results of the consultation have informed the final decision and communicate this to all parties involved. Table 2 - Results of Consultation, provides an example of how these results could be presented in the following format and should clearly indicate -
   (a) who was consulted and how;
   (b) the issues they raised;
   (c) how the results of consultation informed the project outcome.

Table 2 - Results of Consultation

Stakeholders Consulted	Issues Raised	Method Used	Recommendation
The groups and individuals who were consulted.	Issues, objections, suggestions, options raised by participants.	The methods used to consult with the groups and individuals participating.	The amendments, conditions, compensation and other mitigation strategies recommended.

this page purposely
left blank

Planning Scheme Policy 3 - Contributions and Security Bonding

Contents

Chapter 1 - Introduction

3.1.1 Purpose
3.1.2 Applicability

Chapter 2 - Car Parking

3.2.1 Purpose
3.2.2 Applicability
3.2.3 Contributions
3.2.4 Definitions
3.2.5 Authority
3.2.6 General Provisions
3.2.7 Application
3.2.8 Local Government - Responsibilities
3.2.9 Parking Reserve Fund

Chapter 3 - Landscaping

3.3.1 Purpose
3.3.2 Applicability
3.3.3 Planted Landscaping
3.3.4 Public Art
3.3.5 Street Tree Contributions

Chapter 4 - Transport

3.4.1 Purpose
3.4.2 Background
3.4.3 Network Planning Assumptions
3.4.4 Process for Determining Developer Contributions
3.4.5 Charge Areas
3.4.6 Cost and Timing of Infrastructure
3.4.7 Calculating Infrastructure Contributions
3.4.8 Form of Contribution
3.4.9 Credit for Previous Contributions
3.4.10 Terms and Definitions
3.4.11 Appendices

Chapter 4A – Cycleway (Mainland)

3.4A.1 Purpose
3.4A.2 Background
3.4A.3 Network Planning Assumptions
3.4A.4 Process for Determining Developer Contributions
3.4A.5 Charge Areas
3.4A.6 Cost and Timing of Infrastructure
3.4A.7 Calculating Infrastructure Contributions
3.4A.8 Form of Contribution
3.4A.9 Terms and Definitions
3.4A.10 Appendices

Contributions and Security Bonding - Contents

Chapter 5 - Open Space

3.5.1 Purpose
3.5.2 Applicability
3.5.3 Primary Objectives of this Policy
3.5.4 Contributions - General
3.5.5 Land Contribution for Open Space
3.5.6 Monetary Contribution for Open Space
3.5.7 Types of Park

Chapter 6 - Security Bonding

3.6.1 Purpose
3.6.2 Applicability
3.6.3 Definitions
3.6.4 Security Bonds
3.6.5 Special Consideration for a Place of Worship
3.6.6 Form of Security Bonds
3.6.7 Calculation of Security Bond Amounts
3.6.8 Submission of Security Bonds
3.6.9 Return of Security Bonds

Chapter 7 - Water Supply and Sewerage Headworks

3.7.1 Purpose
3.7.2 Applicability
3.7.3 Wastewater
3.7.4 Water Supply
3.7.5 Concessions for Place of Worship

Chapter 1 - Introduction

3.1.1 Purpose

(1) To acknowledge that this policy is an interim measure only and that a detailed review will be conducted as part of the Priority Infrastructure Plans and Infrastructure Charges Schedule process.

(2) To convey the local government's interim position regarding contributions and security bonding for development, by stating contributions and security bonding associated with reconfiguring a lot and for making a material change of use.

(3) Matters addressed by this policy include -

(a) Chapter 2 - Car Parking;
(b) Chapter 3 - Landscaping;
(c) Chapter 4 - Transport and Cycleway (Mainland);
(d) Chapter 5 - Open Space;
(e) Chapter 6 - Security Bonding;
(f) Chapter 7 - Water and Sewerage Headworks.

(4) The policy does not identify all related procedural requirements or all related local laws, regulations or Acts.

3.1.2 Applicabilit y

(1) This policy functions as part of the Integrated Development Assessment System (IDAS) under the *Integrated Planning Act 1997* (IPA).

(2) The policy provides supporting requirements to assist in achieving specific outcomes for codes and is read in conjunction with the planning scheme.

this page purposely
left blank

Chapter 2 - Car Parking

3.2.1 Purpose

(1) The access and parking requirements of the planning scheme detail that the local government may accept payment in-lieu of the provision of on-site car parking spaces.

(2) The purpose of this policy is to -

(a) determine the circumstances under which payment in-lieu of car parking will be accepted by the local government;
(b) determine the amount for payment;
(c) set out the requirements for the implementation of payment in-lieu of car parking provision.

3.2.2 Applicabilit y

(1) Applications for payment in-lieu of parking requirements will be considered for -

(a) areas shown in Schedule B, Maps 1-3; or
(b) specific commercial, sport and recreation, tourist and community uses that are within -
  (i) 400 metres of a local or neighbourhood centre; or
  (ii) 800 metres of a major or district centre; or
(c) other areas as resolved by the local government from time to time.

(2) In general, parking required by a particular development is provided on-site. However, there are circumstances where the provision of shared and consolidated car parking at strategic locations in a centre will serve a broader community interest.

(3) Development applications will be assessed individually in relation to the eligibility for payment in-lieu of car parking.

(4) Payments will generally be accepted only from developments that are -

(a) non-residential;
(b) located in centres, as approved by the local government;
(c) located at sites where -
  (i) access to the site is undesirable; or
  (ii) access will not be granted by the local government or State Government agencies;
  (iii) as a result no on-site car parking provision is proposed; or
  (iv) in the opinion of the local government, it is impractical or undesirable to provide the full number of car parking spaces on-site.

3.2.3 Contributions

(1) With the growth in a range of semi-urban and urban activities in major centres and some lower order centres of the City, parking demand in these centres is growing while the opportunities for additional supply is constrained. The supply is constrained due to ever increasing land value and associated developments.

(2) A shared and consolidated car parking strategy is being promoted throughout all centres in order to address -

(a) the imbalance between the demand and supply of car parking;
(b) to support existing businesses;
(c) to offer opportunities for continued economic growth with the more efficient provision of essential access and car parking facilities in centres.

(3) This policy represents a mechanism to implement the shared and consolidated car parking strategy of the local government.

(4) The policy enables the local government to determine the amount of payment from development applications seeking relief in on-site car parking requirements as set out in Part 9 - Schedule 1 - Access and Parking.

3.2.4 Definitions

(1) Agreement - means an agreement between the local government and an owner applying for off street car parking relief.

(2) Committee - means the relevant Committee of the local government for the City.

(3) Owner - means an owner or authorised agent applying for relief from the requirement to provide off-street car parking.

(4) Parking facility - means an off-street surface car parking area, or structures, lot or garage where motor vehicles, including cycles, may be parked or stored temporarily.

3.2.5 Authorit y

(1) The local government may authorise agreements with owners and occupants of buildings or structures that will provide car parking relief, to the extent set out in the agreements. These agreements are in accordance with the requirements of the planning scheme for the provision and maintenance of on-site parking facilities. Owners may be exempted if specified in the agreements from the necessity of providing or maintaining such parking facilities.

(2) Where a portion, or the entire car parking requirement as specified in Part 9 - Schedule 1 - Access and Parking -

(a) is not proposed to be provided on the site of the proposed development; or
(b) is deemed by the local government to be inappropriate;

the developer will be required by the local government to provide payment in-lieu of car parking for the number of parking bays not provided on the development site.

3.2.6 General Provisions

(1) Each agreement authorised under section 3.2.5(1) will provide for the payment to the local government of a sum of money as calculated by the contribution formula in Schedule A at the time the agreement is executed, or at such other times as is thereby provided.

(2) In the event of an owner or occupant being able to satisfy the local government that they are unable to make payment in a lump sum in accordance with section 3.2.6(1), the agreement mentioned in section 3.2.6(1) will provide for a rate of payment to be determined by the local government based on an interest rate which is the prime rate at the time the agreement is executed.

(3) The formulas set forth in Schedule A for determining the payment are subject to annual review by the local government.

(4) Construction cost for car parking space and per square metre land value will also be subject to annual review. In the event a regular review is not undertaken, the consumer price index (CPI) will be applied to determine the new price of construction cost and land value. The revision of rates is done annually on 1st July.

(5) In the event that an owner or occupant who has entered into such an agreement does not commence construction of the building for which a building permit was issued within two (2) years of issue -
(a) the agreement is null and void and all rights, exemptions and privileges derived by the owner or occupant under the agreement will cease;

(b) twenty (20) percent of the sum calculated in accordance with section 3.2.6(1) will be retained by the local government;
(c) any balance paid in excess of that amount will be refunded to the owner or occupant.

(6) The sums retained by the local government under section 3.2.6(4)(b) will remain in the fund mentioned in section 3.2.9(1).

(7) Each agreement authorised under section 3.2.5(1) will contain a description of the premises sufficient for registering in a proper register.

(8) When registered, the amounts payable under such agreement, until paid, will be lien upon the premises described and will be collected by the local government in the same manner and with the same remedies as provided for the collection of rates.

(9) Nothing in this policy will be interpreted to provide or vest any owner with a special right, privilege or interest of any kind in any parking facility which may result from this policy.

(10) Applications for payment in-lieu of parking requirements will only be considered within the area described in Schedule B.

3.2.7 Application

(1) Every owner or occupant will make a written application in the form and in a manner approved by the local government.

(2) The procedure for processing an application for payment in-lieu of parking contributions is established by the Committee and will be integrated with the development application assessment process.

3.2.8 Local Government - Responsibilities

(1) The local government will collect and manage all monies payable under agreements made in accordance with the provisions of this policy and where such monies are paid, other than by a lump sum, the local government will specify, for inclusion in the agreement prior to final approval by the local government, the number, frequency and amount of installments together with any interest.

(2) On full payment of the money to be paid under any registered agreement, the Committee will inform the local government of the fact and will recommend to the local government that the owner or occupant be released from the provisions of the agreement.

(3) A certificate is issued stating that the money paid under the agreement is fully paid, and is registered in the appropriate register maintained by the local government.

3.2.9 Parking Reserve Fund

(1) All money paid, or paid pursuant to any such agreement, is collected into a special account known as the Parking Reserve Fund and the monies in the special fund will be expended only for the provisions of new public off-street parking facilities.

(2) The auditor in their annual report will report on the activities and position of the special account described in section 3.2.9(1).

Schedules

Schedule A - Payment in-lieu-of Car Parking Contribution Formula

(1) The owner or occupant provides capital towards public parking based on one of the two following formulas. The formulas take into consideration the variation in land costs throughout the City and current estimated construction costs of one parking space in either a parking structure or in a surface car parking facility. It is assumed that an average car parking space requires 31.25m^2 of land in a surface facility, equivalent to parking space yield rate of 32 per 1000m^2 of gross land area, and 35.75m^2 of land in a parking structure, equivalent to the parking yield rate of 28 spaces per 1000m^2 of gross land area.

(2) The applicant will enjoy no right of ownership in such a parking space to the cost of which they have contributed. There is no guarantee that the local government will build a parking space at any particular time or that it will build it in a location that will be of advantage to the applicant. Further, if the parking space is built near the applicant's use it will be utilised for public parking and will not be allocated to the individual use of the applicant in any way.

(3) Depending upon the nature or size of developments, and size of parking relief, contribution on land is proposed to vary from 75 percent to 100 percent, and contribution on construction to vary from 75 percent to 90 percent of actual land sale price and the cost of construction. In general, lower contribution is suggested for smaller development and higher contribution for large scale development.

(4) Payment in-lieu of car parking policy is a mechanism to implement the local government's shared and consolidated car parking (SACP) strategy. Accordingly, the formulas reduce the parking space charge by SACP factor, varying from 50 percent to 100 percent, as a matter of policy to give effect to consolidating car parking spaces in a more desirable location. This reduction is also meant to encourage developers to share on-site car parking spaces for use by general public and not just by their customers, thereby allowing efficient use of car parking spaces in the centre.

Parking Space in Car Parking Structures

(1) The formula to determine the owner's contribution takes into consideration land costs and current estimated costs of one car space, averaging 35.75m^2 per space, in a multi-level parking structure -

(a) for any project requiring relief for 1 - 4 parking spaces -

$$CIL = [\{(C \times 0.75) + (L \times 35.75 \times 0.75)/S\} \times P_f] \times P$$

(75 percent of construction cost and 75 percent of land cost)

(b) for a major renovation or addition to an existing building requiring relief for 5 - 20 parking spaces -

$$CIL = [\{(C \times 0.80) + (L \times 35.75 \times 0.90)/S\} \times P_f] \times P$$

(80 percent of construction cost and 90 percent of land cost)

(c) for a new development requiring relief for 5 - 20 parking spaces -

$$CIL = [\{(C \times 0.80) + (L \times 35.75 \times 1.00)/S\} \times P_f] \times P$$

(80 percent of construction cost and 100 percent of land cost)

(d) for any development requiring relief for more than 20 parking spaces -

$$CIL = [\{(C \times 0.90) + (L \times 35.75 \times 1.00)/S\} \times P_f] \times P$$

(90 percent of construction cost and 100 percent of land cost).

Note -

Where -
L = estimated land cost as determined by recent sales, per square metre of retail or office commercial land within 1000 metres of the proposed development;
35.75 = the number of square metres required for developing one parking space in a hypothetical multi storey car parking facility;
C = current estimated cost of constructing one parking space in a hypothetical multi storey car parking facility;
P_f = shared and consolidated car parking (SACP) strategy factor;
P = number of parking spaces for which payment in lieu of parking is desired;
S = number of storeys or levels in the parking structure;
CIL = cash in lieu of parking payment.

Parking Space in Surface Car Park

(1) The formula to determine the owner's or occupant's contribution takes into consideration land costs and current estimated costs of one car space, averaging 31.25m^2 per space, in a surface car park -

(a) for any project requiring relief for 1 - 4 parking spaces -

$$CIL = [\{(C \times 0.75) + (L \times 31.25 \times 0.75)\} \times P_f] \times P$$

(75 percent of construction cost and 75 percent of land cost)

(b) for a major renovation or addition to an existing building requiring relief for 5 - 20 parking spaces -

$$CIL = [\{(C \times 0.80) + (L \times 31.25 \times 0.90)\} \times P_f] \times P$$

(80 percent of construction cost and 90 percent of land cost)

(c) for a new development requiring relief for 5 - 20 parking spaces -

$$CIL = \{[(C \times 0.80) + (L \times 31.25 \times 1.00)\} \times P_f] \times P$$

(80 percent of construction cost and 100 percent of land cost)

(d) for any development requiring relief for more than 20 parking spaces -

$$CIL = \{[(C \times 0.90) + (L \times 31.25 \times 1.00)\} \times P_f] \times P$$

(90 percent of construction cost and 100 percent of land cost)

Note -

Where -
L = estimated average land cost as determined by recent sales or valuation, per square metre of retail or office commercial land within 1000 metres of the proposed development;
31.25 = the number of square metres required to develop one parking space in a hypothetical surface parking facility;
C = current estimated cost of constructing one parking space in a hypothetical surface parking facility;
P_f = shared and consolidated car parking (SACP) strategy factor;
P = number of parking spaces for which payment in lieu of parking is desired;
CIL = cash in lieu of parking payment.

Schedule B - Policy Area

Map 1 - Cleveland Contribution Area

Map 2 - Capalaba Contribution Area

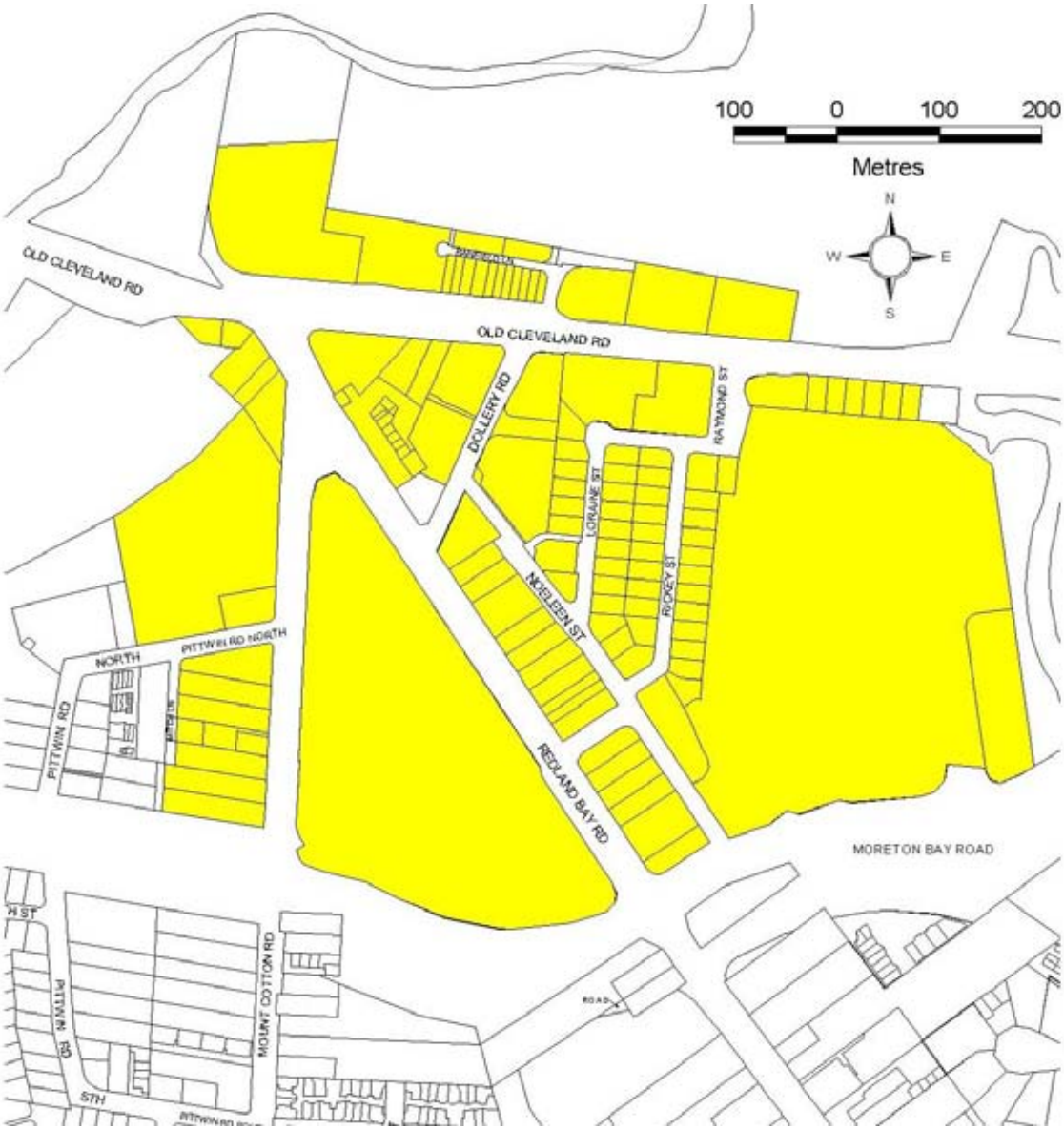

Map 3 - Wellington Point Contribution Area

Note -

Unit Rates of Construction and Land

The following table, which does not form part of the policy, indicates an estimate of the unit rates of construction cost and land cost relevant to some centres or locations identified currently for implementing payment in-lieu of car parking policy. These unit rates are to be reviewed and updated annually.

Table 1 - Unit Rates for 2004/2005 Financial Year

Location	Map ID	Unit Rate of Construction (per space)	Land Value (Sqm)
Cleveland CLV	1	$14644	$714
Cleveland		$4035	$433
Capalaba CAP	1	$14470	$426
Capalaba		$4035	$300
Wellington Point	WPT 1	$14470	$370
Wellington Point		$4035	$315
Other		$4035	As per valuation

this page purposely
left blank

Chapter 3 - Landscaping

3.3.1 Purpose

(1) To outline the circumstances in which contributions for landscaping, public art and street trees will be required as part of a development approval.

3.3.2 Applicabilit y

(1) The local government will require a contribution in accordance with this policy towards the cost of public art and/or street trees as a condition of -

(a) a development permit pursuant to the *Integrated Planning Act 1997* in respect of a development application for -
(i) a material change of use that is assessable development; or
(ii) the reconfiguring of a lot that is assessable development.

3.3.3 Planted Landscaping

(1) As detailed in Chapter 6 - Security Bonding of this policy.

3.3.4 Public Art

(1) Public art - means artworks and designed landscape elements located in outdoor urban and semi-urban public places, such as footpaths, streets, parks, centres, foreshore areas and recreational areas. Public art is defined here as artworks and designed landscape elements occurring on public land. Public art can also include architectural features of buildings but would not usually include works of art such as paintings that are part of the art collection managed by the Redland City Art Gallery that are not able to be permanently located outdoors.

(2) The local government reserves the right to locate public art in the most appropriate and meaningful sites for the community. This principle supersedes the need for a direct spatial or visual relationship between the public art and the development that funds it.

(3) In determining the appropriate site for an artwork the following criteria will apply -

(a) the public art advisory panel will make recommendations in regard to the locations of the local government funded public artworks;

(b) desirable public art sites will be identified through the local area planning process; or

(c) pooling of funds for public art are encouraged within centres and in conjunction with Streetscape Improvement Projects.

(4) The location of private sector funded artworks will be subject to negotiation with the developer and will be determined within the following framework within -

(a) the defined centre in which the development is located; or

(b) a prescribed area such as an identified Streetscape Improvement Project.

(5) All proposals for public art are subject to a uniform evaluation process.

(6) Artworks are defined, costed and their association to the development conditions is to satisfy the reasonable and relevant test under the *Integrated Planning Act 1997* (IPA).

(7) Contributions are negotiated on the following development proposals -

(a) material change of use in a centre; or
(b) developments participating in the local government Streetscape Improvement Projects.

(8) Contributions will be negotiated with the private sector at the time of the development application.

3.3.5 Street Tree Contributions

(1) The developer contributes towards street tree planting in accordance with Part 8 - Division 8 - Landscape Code.

(2) Contributions are made before the local government signs a plan of survey.

(3) The current contribution rate is listed in the local government's Schedule of Fees and Charges.

(4) Contributions are used to implement the Street Tree Planting program within the premises unless constrained by the site, in which case planting will occur in the nearest suitable location.

Chapter 4 – Framework for Infrastructure Charges Contributions (Transport)

Purpose

(1) The purpose of this Policy is to implement an equitable developer contributions scheme for the trunk transport network servicing the mainland of Redland City. The contributions will be used to fund new and/or improved infrastructure needed to manage future growth on the City's mainland.

(2) Nature and Intention of Planning Scheme Policy

(a) This planning scheme policy sets the basis for infrastructure contributions for trunk transport infrastructure for Redland City. The policy provides the basis for the charges.

(b) A new Priority Infrastructure Plan and related Infrastructure Charges Schedule will ultimately be adopted and form the basis for infrastructure provision. In the interim, this Planning Scheme Policy – Framework for Infrastructure Charges Contributions (Transport) will be the basis for receiving contributions toward trunk transport infrastructure needed to service growth within the City.

(3) Nature of Development Which Policy Applies and Triggers

(a) This planning scheme policy applies to assessable development for material change of use and/or reconfiguration of a lot in Redland City, in relation to the following uses:

(i) Aged Persons and Special Needs Housing;

(ii) Apartment Building;

(iii) Caretakers Dwelling;

(iv) Display Dwelling;

(v) Dual Occupancy;

(vi) Dwelling House;

(vii) Multiple Dwelling;

(viii) Small Lot House.

(b) For Material Change of Use and Reconfiguration of Allotment applications for the above residential uses, Council will impose a requirement for a contribution to trunk transport infrastructure where the development increases demand on the transport network.

(c) For forms of development other than residential (i.e. commercial or industrial) on the mainland, Council will negotiate an appropriate charge and/or works for transport infrastructure with the developer based on likely level of impact on the transport network.

3.4.2 Backgrou nd

(1) The need for Transport Infrastructure

(a) Strong growth is expected to continue in Redland City creating an increasing demand on roads and other transport infrastructure. To cater for this growth, and to ensure the mainland within the City have an effective road network with the capacity to cater for daily demands, continued upgrades to the road network and public transport infrastructure will be required.

(2) Adoption date and superseded policies (if applicable).

(a) The policy will replace the Planning Scheme Policy 3 – Contributions and Security Bonding Chapter 4 Movement Network within Part 11 of the Redland Planning Scheme. This policy includes the following areas:

(i) Wellington Point;

(ii) East Thornlands;

(iii) Redland Bay.

(b) The policy came into effect on 13 March 2007 - Resolution of Council General Meeting held on 28 February 2007.

3.4.3 Network Planning Assumptions

(1) Definition of infrastructure covered by policy.

(a) The trunk infrastructure covered by this policy and defined in the Redlands Planning Scheme includes the following:

(i) Arterial roads;

(ii) Sub-arterial roads;

(iii) Trunk collector streets,

(iv) Collector streets.

(b) This policy does not cover any roads controlled by the State Government.

(2) Transport – Desired Standards of Service

(a) Roads

(i) The Desired Standards of Service for roads on the mainland is largely dependent on the road hierarchy classification, and are shown in Table 1;

(ii) The Desired Standards of Service apply to all roads on the mainland;

(iii) Quantitative standards apply to the network of roads on the mainland. Quantitative standards for road infrastructure relate to the capacity of the network, as it provides a threshold for the provision of additional infrastructure.

Table 1 Desired Standards of Service (Quantitative Standards)

Road Classification	Mainland		Equivalent Residential Allotments
	AADT	V/C	
Collector Street	1,000-3,000	0.5	300
Trunk Collector Street	3,000-10,000	0.75	1000
Sub-Arterial Road	10,000-20,000	0.75	2000
Arterial Road	30,000	0.85	n/a

* V/C Ratios developed as per relevant classification in Austroads Guide to Traffic Engineering Practice – Part 2.
* Equivalent Number of Lots according to Part 9, Schedule 6 – Movement Network and Road Design from RCC's Drafting Planning Scheme 2nd State Interest Review.

(b) Bus facilities to include bus stopping treatments and shelters in accordance with joint Redland City Council and Translink programs.

(c) Desired Standards of Service for cycleways and pathways concern geometric design considerations required for the construction of trunk infrastructure as defined by on and off road facilities identified in the *Redlands Cycling and Pedestrian Strategy*, and summarised in Table 2 below.

Table 2 Desired Standards of Service for Cycleways and Pathways

Road Classification	Design Speed km/h	General Design Characteristic
Collector Street	50	Footpaths or shared path on one side of road desirable or 1.5m wide bicycle lanes marked on carriageway.
Trunk Collector Street	60	Footpaths typically provided. Bikeways desirably provided on road verge but on existing road systems they may be incorporated in breakdown/parking lane (1.5m wide).
Sub-Arterial Road	60	Typically bicycle lanes on road verge. 2-2.5 m shared path facilities or footpath on both sides of road and/or 1.5m wide bicycle lands marked on carriageway.
Arterial Road	70-80	Typically bicycle lanes on road verge. 2-2.5 m shared path facilities desirable or 2 m wide bicycle lanes marked on carriageway.

(3) Planning Areas, Catchment Areas and Planning Criteria

(a) Refer to Appendix A – Infrastructure Contributions Schedule.

(4) Growth Assumptions

(a) Growth assumptions used for this Planning Scheme Policy are those population and household growth rates prepared for Redland City Council's Priority Infrastructure Plan; refer to Tables 3 and 4.

Contributions and Security Bonding - Chapter 4

Table 3 Population Growth Rates – Redland Shire Council

Community Of Interest	Population																	
	2004	2005	2006	2007	2008	2009	2010	2011	2012	2013	2014	2015	2016	2017	2018	2019	2020	2021
Alexandra Hills	17,692	17,715	17,738	17,761	17,783	17,806	17,829	17,852	17,884	17,916	17,949	17,981	18,013	18,020	18,026	18,033	18,039	18,046
Birkdale	14,440	14,595	14,749	14,904	15,058	15,213	15,367	15,522	15,762	16,002	16,241	16,481	16,721	16,866	17,011	17,155	17,300	17,445
Capalaba	17,799	18,005	18,212	18,418	18,624	18,830	19,037	19,243	19,555	19,867	20,179	20,491	20,803	20,952	21,100	21,249	21,397	21,546
Cleveland	13,889	14,018	14,148	14,277	14,406	14,535	14,665	14,794	15,049	15,304	15,560	15,815	16,070	16,120	16,170	16,220	16,270	16,320
Ormiston	5,669	5,727	5,786	5,844	5,903	5,961	6,020	6,078	6,239	6,399	6,560	6,720	6,881	6,987	7,093	7,200	7,306	7,412
Redland Bay	9,535	10,102	10,668	11,235	11,801	12,368	12,934	13,501	14,379	15,257	16,135	17,013	17,891	18,489	19,087	19,685	20,283	20,881
Sheldon-Mt Cotton	4,935	5,182	5,429	5,676	5,924	6,171	6,418	6,665	7,066	7,467	7,867	8,268	8,669	9,121	9,573	10,025	10,477	10,929
Thorneside	3,496	3,503	3,510	3,517	3,524	3,531	3,538	3,545	3,591	3,637	3,682	3,728	3,774	3,786	3,799	3,811	3,824	3,836
Thornlands	9,695	10,162	10,628	11,095	11,562	12,029	12,495	12,962	13,731	14,500	15,269	16,038	16,807	17,135	17,464	17,792	18,121	18,449
Victoria Point	13,674	13,924	14,174	14,424	14,673	14,923	15,173	15,423	15,860	16,297	16,735	17,172	17,609	17,696	17,784	17,871	17,958	18,045
Wellington Point	10,196	10,370	10,544	10,718	10,893	11,067	11,241	11,415	11,666	11,917	12,169	12,420	12,671	12,742	12,814	12,885	12,956	13,027
The Bay Islands	6,757	6,913	7,070	7,226	7,382	7,538	7,695	7,851	8,001	8,151	8,301	8,451	8,601	8,753	8,905	9,057	9,209	9,361
Total	127,777	130,216	132,655	135,094	137,534	139,973	142,412	144,851	148,783	152,715	156,647	160,579	164,510	166,668	168,825	170,982	173,140	175,297

Table 4 Household Growth Rates – Redland Shire Council

Community Of Interest	Households																	
	2004	2005	2006	2007	2008	2009	2010	2011	2012	2013	2014	2015	2016	2017	2018	2019	2020	2021
Alexandra Hills	5,951	5,959	5,967	5,975	5,984	5,992	6,000	6,008	6,021	6,034	6,046	6,059	6,072	6,076	6,080	6,085	6,089	6,093
Birkdale	4,888	4,950	5,012	5,074	5,137	5,200	5,263	5,326	5,420	5,514	5,609	5,704	5,800	5,869	5,938	6,008	6,078	6,149
Capalaba	6,290	6,390	6,492	6,594	6,697	6,801	6,906	7,012	7,162	7,314	7,467	7,622	7,779	7,865	7,953	8,041	8,130	8,219
Cleveland	5,661	5,740	5,819	5,900	5,981	6,062	6,145	6,228	6,360	6,493	6,627	6,763	6,899	6,938	6,977	7,017	7,056	7,096
Ormiston	2,106	2,130	2,154	2,179	2,203	2,227	2,252	2,276	2,338	2,400	2,462	2,524	2,586	2,644	2,703	2,763	2,824	2,886
Redland Bay	3,492	3,701	3,911	4,121	4,331	4,542	4,752	4,963	5,289	5,615	5,941	6,268	6,595	6,817	7,039	7,262	7,484	7,707
Sheldon-Mt Cotton	1,614	1,693	1,771	1,850	1,928	2,006	2,084	2,162	2,300	2,439	2,579	2,719	2,861	3,009	3,156	3,303	3,450	3,597
Thorneside	1,489	1,500	1,511	1,523	1,534	1,546	1,557	1,569	1,585	1,600	1,615	1,631	1,646	1,647	1,647	1,648	1,648	1,649
Thornlands	3,341	3,522	3,705	3,890	4,078	4,267	4,459	4,653	4,935	5,218	5,502	5,787	6,072	6,316	6,570	6,835	7,111	7,400
Victoria Point	4,923	5,032	5,142	5,252	5,364	5,476	5,589	5,703	5,891	6,081	6,273	6,467	6,662	6,673	6,684	6,695	6,706	6,717
Wellington Point	3,573	3,642	3,711	3,780	3,850	3,919	3,990	4,060	4,161	4,263	4,365	4,468	4,571	4,612	4,653	4,694	4,736	4,778
The Bay Islands	3,153	3,212	3,271	3,330	3,388	3,445	3,502	3,559	3,616	3,672	3,728	3,784	3,839	3,895	3,952	4,007	4,063	4,118
	46,481	47,472	48,467	49,468	50,473	51,483	52,498	53,519	55,077	56,643	58,215	59,795	61,382	62,362	63,354	64,358	65,377	66,409

3.4.4 Process for Determining Developer Contributions

(1) Procedures Used to Calculate Trunk Road Infrastructure Contributions on the Mainland

(a) The adopted road infrastructure contributions scheme is based on charging new developments on the mainland the shared cost of Council's planned program of trunk road infrastructure upgrading through to the year 2021. The trunk infrastructure elements are identified in the Plans for Trunk Infrastructure, included in Appendix A.

(b) Trunk Road Infrastructure includes arterial roads, sub-arterial roads, trunk collector streets and some collector streets. The charges presented do not cover the cost of providing a new development with access to the trunk road infrastructure network. The cost of providing such access is a cost borne by the developer.

(c) The process used to calculate Trunk Road Infrastructure Contributions for new developments on the mainland portion of the City is set out below.

(i) Calibrate and Validate a Base Year (2005) Travel Model

a. Traffic forecasts produced by Veitch Lister Consulting's multi-modal travel forecasting model (Zenith) have been used to estimate the scale of traffic growth within Redland City through to 2021. The scale of investment required to maintain levels of service across Council's road network for the expected traffic growth has been assessed using these forecasts.

b. The Zenith model was initially set-up to replicate travel associated with Redland City in 2005 (the base year). The model's traffic estimates within Redland City were then compared (or validated) against recent traffic counts undertaken in the City. The model's traffic estimates were found to closely correspond with the traffic counts. Both the charge and the travel model are to be reviewed on a regular basis. This will allow Council to monitor the accuracy of the model and update the network as required.

(ii) Establish Horizon Year 2021 Travel Model

a. The second step in the process of determining the upgrade works required is the establishment of a 2021 version of the Zenith model. This model incorporates Council's *planning assumptions* regarding the anticipated scale, type and location of development in Redland City through to the year 2021.

b. The 2021 model also included committed and planned Council, State and Federal transport infrastructure within South East Queensland.

(iii) Identified Deficiencies in the 2021 Transport Network

a. The 2021 travel model was run and deficiencies in the road network were identified by examining the predicted traffic volume/capacity ratios (V/C) across the road network. Deficiencies were categorised according to Austroads level of service definitions, as shown in Table 5.

Table 5 Level of Service Categorisation

Level of Service	24 Hr V/C
A	<0.7
B	0.70 – 0.85
C	0.85 – 1.0
D	1 – 1.15
E	1.15 – 1.30
F	>1.30

Level of Service	Austroads Description
A	General free flow conditions with operating speeds usually about 90% of the free flow travel speed for the particular class of arterial. Vehicles are unimpeded in manoeuvring in the traffic stream and stopped delay at intersections is minimal.
B	Relatively unimpeded operation with average travel speeds about 70% of the free flow speed for the particular arterial class. Manoeuvring in the traffic stream is only slightly restricted and stopped delays are low.
C	Stable operating conditions but with manoeuvring becoming more restricted and motorist experiencing appreciable tension in driving, longer queues and/or adverse signal coordination may contribute to lower average travel speeds of about 50% of the free flow speed for the arterial class.
D	Conditions border on a range in which small increases in flow can significantly increase intersection delay and reduce travel speed. Travel speeds are about 40% of the free flow speed.
E	Conditions are characterised by significant intersection delays and travel speeds of 33% of free flow speed or lower. Contributing factors may be: adverse signal progression, closely spaced signals, extensive queuing at critical intersections (ie. saturated intersection conditions).
F	Traffic flow at this level is very low speed – below 25% to 33% of the free flow speed for the arterial class. Signalised intersections would be severely congested (over-saturated) with extensive queuing and delay.

b. Level of service category A indicates the best possible performance (traffic operating at near free–flow speeds), while level of service category F indicates highly congested conditions – i.e. conditions that result in a journey that might take only 20 minutes in the off-peak taking over an hour in the peak.

c. Level of service C has been adopted as the minimum required level of service across a 24 hr period for trunk road infrastructure in urban conditions, Level of service C reflects V/C ratios in the range 0.85 to 1.0. This level of service has been used in the assessment of road network deficiencies, and in the identification of road network improvements required to maintain levels of services.

(iv) Nominate Road Improvement Projects for Network Deficiencies in 2021 Model

a. Road capacity deficiencies in the network were identified for the 2021 model. Priority road network upgrades were determined so that a level of service objective of c, across most of the trunk road infrastructure was achieved.

(v) Develop a Program of Road Improvement Project through to 2021

a. A program of road improvement projects was subsequently prepared and aimed at maintaining the level of service on the road network over the period 2006 to 2021.

b. Some projects were included in the program that were justified on grounds other than overcoming road capacity deficiencies. Some projects were considered justified because of road safety and urban amenity issues.

c. The agreed road improvement program is enclosed as Appendix A.

(2) Equitable Apportionment to New Development

(a) The basis for cost apportionment is an equal distribution of the total cost of all trunk road network components on the mainland spread across all residential traffic generators (existing and future) in the Redland City.

(3) Calculating Charges for New Residential Development

(a) Typical equivalent residential allotments (ERA) rates for the range of residential land uses applicable to this policy are presented in Table 6.

Table 6 Equivalent Residential Allotment Rates

Use	Equivalent Residential Allotment	Assessment Unit
Aged Persons and Special Needs Housing		
■ Independent	0.30	Per dwelling
■ Semi-Independent	0.15	Per room
■ Dependent	0.08	Per bed
Apartment Building		
■ One Bedroom	0.30	Per apartment
■ Two Bedroom	0.60	Per apartment
■ Three Bedroom	0.80	Per apartment
■ Penthouse	1.00	Per apartment
Caretakers Building	1.00	Per dwelling
Dual Occupancy	0.30	Per bedroom
Dwelling House (detached)	1.00	Per dwelling
Multiple Dwelling	0.30	Per bedroom
Small Lot House	0.62	Per house
Other Residential Uses	0.30	Per bedroom

(4) Indexation

(a) Developer contribution rates for transport infrastructure are in August 2006 dollars. Land required for transport corridors and road construction costs have been included in the Transport Infrastructure Contribution. Contributions payable shall be at the rate applicable at the time of payment. The Transport Infrastructure Charge will be indexed on 1st July each year by the Australian Bureau of Statistics Road and Bridge Construction Index.

(5) Subsidies and grants

(a) Any subsidies or grants that could be identified at the time of the planning for the Plans for Trunk Infrastructure have been removed from the overall cost of facilities.

(6) General Requirements for Credits

(a) There may be circumstances where the proposed development receives credit for previous contribution from the same development for transport infrastructure. In these cases the previous contribution if paid for transport infrastructure, may provide the basis for credits for the transport infrastructure provided by this policy.

(b) The determination of how a developer contribution is paid is at the discretion of Council. In cases where credits apply, credits will be available to offset the infrastructure charges required by this Planning Scheme Policy.

(7) Creditable Contributions

(a) Where a condition of development approval (by Council) requires the applicant to undertake works and/or dedicate land which are identified as part of the infrastructure charges schedule it is appropriate for the Council to offset the agreed costs of such works and/or land from the Transport Infrastructure Charge contribution. The value of the works will need to be agreed to by council prior to the works commencing and documented in an Infrastructure Agreement.

(b) An existing use has a credit values as stated in Table 6.

3.4.5 Charge Areas

(1) The mainland transport charge will apply to all future residential development on the mainland within the Priority Infrastructure Area, which increases the demand on the transport network.

(2) Definition of contribution areas

(a) Refer to Appendix B for Maps describing the transport contribution area.

(3) Existing Approvals and Infrastructure Agreement areas

(a) Existing Infrastructure Agreements are not subject to this policy.

(b) All community Title Schemes or similar development will be charged in accordance with the rates in Table 6.

3.4.6 Cost and Timing of Infrastructure

(1) Details regarding cost and timing of infrastructure can be found in supporting documents – Refer to Infrastructure Contributions Schedule in Appendix A.

3.4.7 Calculating Infrastructure Contributions

(1) The transport infrastructure contribution on the mainland for an equivalent residential allotment (ERA) can be found in Table 6. The equivalent rate for other residential land use can be determined by applying the equivalency rates in Table 6.

(2) The process for determining the transport infrastructure contribution for different development types is set out in a separate calculation guideline.

Note –

If the development does not achieve the densities as set out in the Redland Planning Scheme, the developer is required to pay the developer contribution in accordance with planned densities as stated in the Redland Planning Scheme.

3.4.8 Form of Contribution

(1) Generally and at its discretion, Council will seek either a financial contribution based on the above charge rates, works and/or land in lieu in accordance with the Infrastructure Contribution Schedule projects (refer Appendix A) and individual infrastructure agreements.

3.4.9 Credit for Previous Contributions

(1) Credit may be sought for previous transport infrastructure contributions attached to a parcel of land where conclusive documentation is presented to Council that detail:

(a) How and the extent to which the previous charges or works complies with requirements of the Infrastructure Contributions Schedule

(b) The date the previous charges works was dedicated to Council;

(c) The lawful development potential and actual development that accompanied the charges for works; and

(d) A breakdown of credit per lot for each lot that resulted from a previous residential material change in use or reconfiguration of a lot for which credit is sought.

3.4.10 Terms and Definitions

"ERA" Means Equivalent Residential Allotment

"RCC" Means Redland City Council

"ICS" Means Infrastructure Contributions Schedule

"lot" A separate distinct parcel of land created on the registration on a plan of subdivision, under the land title act 1994.

3.4.11 Appendices

Appendix A – Infrastructure Charges Schedule

Appendix B – Maps of existing and future infrastructure

Contributions and Security Bonding - Chapter 4

Appendix A – Transport Infrastructure Contributions Schedule

Map Reference	Road Name	Upgrade Type	From (or at)	To	Number Of Intersection Upgrades	Existing Infrastructure Value	Upgrade Cost	Construction Period
P4	Panorama Drive	Upgrade from 2 to 4 lanes	Boundary Road	Wellington Street	2	$ 9.34	$ 7.02	2006-2011
P7	Wellington Street	Upgrade from 2 to 4 lanes	South Street	Panorama Drive	1	$ 19.29	$ 5.30	2006-2011
P5	Wellington Street	Upgrade from 2 to 4 lanes	Russell Street	South Street	5	$ -	$ 11.44	2006-2011
P6	Rickertt Road - Quarry Road	Upgrade from 2 to 4 lanes	Charles Street	Tingalpa Creek	3	$ 8.10	$ 15.20	2006-2011
P52	Old Cleveland Road East	Intersection Upgrade	Entrance to Birkdale Refuse Transfer Station			$ -	$ 0.28	2006-2011
P26	Gordon Road	Upgrade from 2 to 4 lanes	Cleveland Redland Bay Road	Government Road	2	$ 5.25	$ 7.91	2006-2011
P27	Government Road	Upgrade from 2 to 4 lanes	Gordon Road	Meissner Street	1	$ 0.75	$ 1.62	2006-2011
P29	German Church Road	Upgrade from 2 to 4 lanes	Cleveland Redland Bay Road	Gordon Road	1	$ 2.24	$ 4.65	2006-2011
P30	School of Arts Road	Upgrade from 2 to 4 lanes	German Church Road	Collins Street	1	$ 6.18	$ 10.96	2006-2011
P31	Collins Street	Upgrade from 2 to 4 lanes	School of Arts Road	Donald Road		$ 2.74	$ 3.81	2006-2011
P33	Serpentine Creek Road	Upgrade from 2 to 4 lanes	Collins Street	Cleveland Redland Bay Road	1	$ 3.82	$ 5.45	2006-2011
P31	Collins Street	Signals	At Donald Road			$ -	$ 0.80	2006-2011
P2	Baythorn Drive	2 lane Trunk Collector	King Street	Cleveland Redland Bay Road	1	$ -	$ 2.57	2006-2011
P51	Baythorn Drive	Roundabout	At King Street			$ -	$ 0.45	2006-2011
P53	Baythorn Drive	Roundabout & culvert upgrade	At Thornlands Road			$ -	$ 0.80	2006-2011
P13	Main Road	Upgrade to 2 lane divided road	Plumer Street	Duncan Street		$ 7.99	$ 1.50	2006-2011
P13	Main Road	Intersection Upgrade	At Nelson Road			$ -	$ 0.60	2006-2011
P11	Mt Cotton Road	Signals	At School Road			$ -	$ 0.40	2006-2011
P3	New Trunk Collector - South East Thornlands	2 lane Trunk Collector	Boundary Road	Cleveland Redland Bay Road			$ 2.50	2006-2011
P55	Capalaba Victoria Point Road	Upgrade existing signals	At Mt Cotton Road			$ -	$ 0.14	2006-2011
P10	Northern Arterial Road	Upgrade from 2 to 4 lanes	Sturgeon Street	Dundas Street	1	$ 1.30	$ 2.17	2011-2016
P10	Northern Arterial Road	Upgrade from 2 to 4 lanes	Dundas Street	Wellington Street	1	$ 1.35	$ 2.24	2011-2016
P24	Dinwoodie Road	2 lane Trunk Collector	Cleveland Redland Bay Road	Boundary Road	1	$ 3.14	$ 3.50	2011-2016
P23	Ney Road	Upgrade from 2 to 4 lanes	Guyana Road	Mt Cotton Road	1	$ 19.10	$ 5.56	2011-2016
P28	Weinam Street	Upgrade from 2 to 4 lanes	Meissner Street	Pitt Street		$ 0.80	$ 1.23	2011-2016
P34	Pitt Street	Upgrade from 2 to 4 lanes	Weinam Street	Hamilton Street		$ -	$ 1.06	2011-2016
P35	Hamilton Street	Upgrade from 2 to 4 lanes	Pitt Street	Peel Street		$ -	$ 1.06	2011-2016
P18	Bunker Road	Upgrade from 2 to 4 lanes	Brookvale Drive	Bypass Realignment	3	$ 4.67	$ 11.15	2011-2016
P8	Woodlands Drive	Upgrade from 2 to 4 lanes	Mt Cotton Road	Taylor Road	1	$ 3.60	$ 5.95	2011-2016
P9	Woodlands Drive	Upgrade from 2 to 4 lanes	Taylor Road	Boundary Road	1	$ 8.12	$ 12.94	2011-2016
P44	Hardy Road	Roundabout	At Collingwood Road			$ -	$ 0.42	2011-2016
P45	Old Cleveland Road East	Signals	At Randall Road			$ -	$ 0.42	2011-2016
P46	Old Cleveland Road East	Signals	At Barron Street			$ -	$ 0.28	2011-2016
P21	Sturgeon Street	Intersection Upgrade	At Delancey Street			$ -	$ 0.28	2011-2016
P21	Sturgeon Street	Upgrade from 2 to 4 lanes	Northern Arterial	Starkey Street		$ 2.97	$ 6.37	2011-2016
P21	Starkey Street	Upgrade existing signals	At Old Cleveland Road			$ -	$ 0.14	2011-2016
P39	Long Street	Intersection Upgrade	At Smith Street			$ 7.01	$ 0.42	2011-2016
P54	Passage Street	Intersection Upgrade	At Princess Street			$ 4.00	$ 0.31	2011-2016
P43	Benfer Road	Signals	At Link Street			$ -	$ 0.21	2011-2016
P40	Ziegenfusz Road	Signals	At Vintage Street			$ 4.41	$ 0.28	2011-2016
P41	Ziegenfusz Road	Signals	At Trundle Street			$ -	$ 0.21	2011-2016
P42	Ziegenfusz Road	Signals	At Moselle Drive			$ -	$ 0.21	2011-2016
P11	Mt Cotton Road	Upgrade from 2 to 4 lanes	Moreton Bay Road	Howlett Road	9	$ 16.68	$ 14.68	2011-2016
	Kinross Road	Upgrade from 2 to 4 lanes	Boundary Road	End	2 roundabouts	$ 3.00	$ 5.00	2011-2016
P14	Bunker Road	Upgrade from 2 to 4 lanes	Brookvale Drive	Intrepid Drive (exist. Roundabout)	3	$ 5.54	$ 6.44	2016-2021
P18	Bunker Road	Signals	Intersection with Bypass			$ -	$ 0.49	2016-2021
P18	Bunker Road	Signals	Intersection with Double Jump Road			$ -	$ 0.49	2016-2021

Map Reference	Road Name	Upgrade Type	From (or at)	To	Number Of Intersection Upgrades	Existing Infrastructure Value	Upgrade Cost	Construction Period
P20	German Church Road	Upgrade from 2 to 4 lanes	Cleveland Redland Bay Road	Heinemann Road	1	$ 9.42	$ 13.40	2016-2021
P20	German Church Road	Signals	At Days Road			$ -	$ 0.71	2016-2021
P22	Mcdonald Road	Upgrade from 2 to 4 lanes	Finucane Road	McMillan Road	2	$ 4.40	$ 7.02	2016-2021
P36	Collingwood Road	Intersection Upgrades	At Spoonbill Street			$ -	$ 0.28	2016-2021
P37	Collingwood Road	Intersection Upgrades	At Lorna Street			$ -	$ 0.42	2016-2021
P38	Pitt Road	Intersection Upgrade	At Nelson Street			$ -	$ 0.28	2016-2021
P48	Broadwater Terrace	Intersection Upgrade	At Boundary Street			$ 2.76	$ 0.21	2016-2021
P49	Broadwater Terrace	Intersection Upgrade	At Marine Street			$ -	$ 0.21	2016-2021
P50	Broadwater Terrace	Intersection Upgrade	At Stradbroke Street			$ -	$ 0.21	2016-2021
P51	Broadwater Terrace	Intersection Upgrade	At Peel Street			$ -	$ 0.21	2016-2021
P47	Bay Street	Signals	At Smith Street			$ -	$ 0.28	2016-2021
P25	Giles Road	Improve Road Seal	Heinemann Road	Cleveland Redland Bay Road	1	$ 9.74	$ 1.80	2016-2021
P17	Kingfisher Road	Upgrade from 2 to 4 lanes	Eprapah Road	Realignment	2	$ 6.11	$ 10.00	2016-2021
P1	Victoria Point Bypass Road	New alignment	Kingfisher Road	Double Jump Road		$ -	$ 11.05	2016-2021
P19	Double Jump Road	Upgrade from 2 to 4 lanes	Cleveland Redland Bay Road	Bypass Realignment	1	$ 25.47	$ 18.90	2016-2021
P56	Heinemann Road	Intersection Upgrade	At Double Jump Road			$ -	$ 0.42	2016-2021
P15	Springacre Road	Upgrade from 2 to 4 lanes	Boundary Road	Future Link to Woodlands	1	$ 4.77	$ 4.89	2016-2021
P16	Springacre Road	Upgrade from 2 to 4 lanes	Future Link to Woodlands	Eprapah Road	1	$ -	$ 6.46	2016-2021
	Redland Shire	Road related cycling				$ -	$ 49.58	various
	Hardy Road	Nil	Birkdale Road	Collingwood Road		$ 3.29		
	Charles Street	Nil	Quarry Road	Thorne Road		$ 0.91		
	Taylor Road	Nil	Duncan Road	Woodlands Drive		$ 4.72		
	Lyndon Road	Nil	Capalaba Victoria Point Road	Duncan Road		$ 7.20		
	West Mount Cotton Road	Nil	Mount Cotton Road	Shire Boundary		$ 23.72		
	Heinemann Road	Nil	German Church Road	Double Jump Road		$ 11.73		
	Valley Way	Nil	German Church Road	Mount Cotton Road		$ 14.10		
	Starkey Street	Nil	Old Cleveland Road East	Duncan Road		$ 3.60		
	Marlborough Road	Nil	Main Road	Hardy Road		$ 2.94		
	Collingwood Road	Nil	Birkdale Road	Pitt Road		$ 5.48		
	Windemere Road	Nil	Finucane Road	Capalaba Victoria Point Road		$ 5.63		
	Clifford Perske Drive	Nil	South Street	Thornlands Road		$ 3.09		
	Baythorn Drive	Nil	Thornlands Road	King Street		$ 1.27		
	Pitt Road	Nil	Collingwood Road	Nelson Road		$ 0.89		
	Duncan Road	Nil	Starkey Street	Main Road		$ 1.94		
	Old Cleveland Road East	Nil	Birkdale Road	Starkey Street		$ 11.51		
	Shore Street West	Nil	Waterloo Street	Passage Street		$ 6.47		
	South Street	Nil	Wellington Street	Clifford Perske Drive		$ 4.80		
	Thornlands Road	Nil	Cleveland Redland Bay Road	End		$ 0.45		
	Benfer Road	Nil	Cleveland Redland Bay Road	Link Road		$ 4.17		
	Boundary Street	Nil	Cleveland Redland Bay Road	Broadwater Terrace		$ 4.57		
	Pitt Street	Nil	Hamilton Street	Weinam Street		$ 0.65		
	Meissner Street	Nil	Weinam Street	Government Road		$ 0.63		
	Link Road	Nil	Colburn Avenue	Benfer Road		$ 4.64		
	Point O'Halloran Road	Nil	Colburn Avenue	End		$ 7.37		
	Redland Bay Road	Nil	Mount Cotton Road	Moreton Bay Road		$ 3.03		
	Avalon Road	Nil	Mount Cotton Road	Shire Boundary		$ 17.98		
	Allenby Road	Nil	Main Road	Finucane Road		$ 6.14		
	Thorneside Road	Nil	Quarry Road	Fisher Road		$ 2.16		
	Russell Street	Nil	Waterloo Street	Wellington Street		$ 2.69		
	Mooroondu Road	Nil	Thorne Road	Fisher Road		$ 3.01		
	Marine Street	Nil				$ 0.02		

Contributions and Security Bonding - Chapter 4

Map Reference	Road Name	Upgrade Type	From (or at)	To	Number Of Intersection Upgrades	Existing Infrastructure Value	Upgrade Cost	Construction Period
	Peel Street	Nil				$ 0.05		
	Queen Street	Nil	Government Road	School of Arts Road		$ 2.39		
	School Road	Nil	Mount Cotton Road	Ney Road		$ 3.38		
	Vienna Road	Nil	Finucane Road	Capalaba Victoria Point Road		$ 8.61		
	Alexandra Circuit	Nil	Vienna Road	Vienna Road		$ 4.05		
	Bay Street	Nil	Bloomfield Street	Wellington Street		$ 3.10		
	Middle Street	Nil	Passage Street	Emmett Drive		$ 1.50		
	Banana Street	Nil	Weinam Street	Meissner Street		$ 1.08		
	Nelson Road	Nil	Pitt Road	Main Road		$ 2.01		
	Cambridge Drive	Nil	Finucane Road	Vienna Road		$ 2.57		
					TOTALS	$ 413.60	$ 293.24	

Notes:
1. Upgrade costs are in 2006 dollars
2. Costs are in millions of dollars
3. Construction period is indicative only and will be reviewed depending on development pressures.
4. Upgrade costs include a 25% contingency amount.

Appendix B – Maps for existing and Future Infrastructure

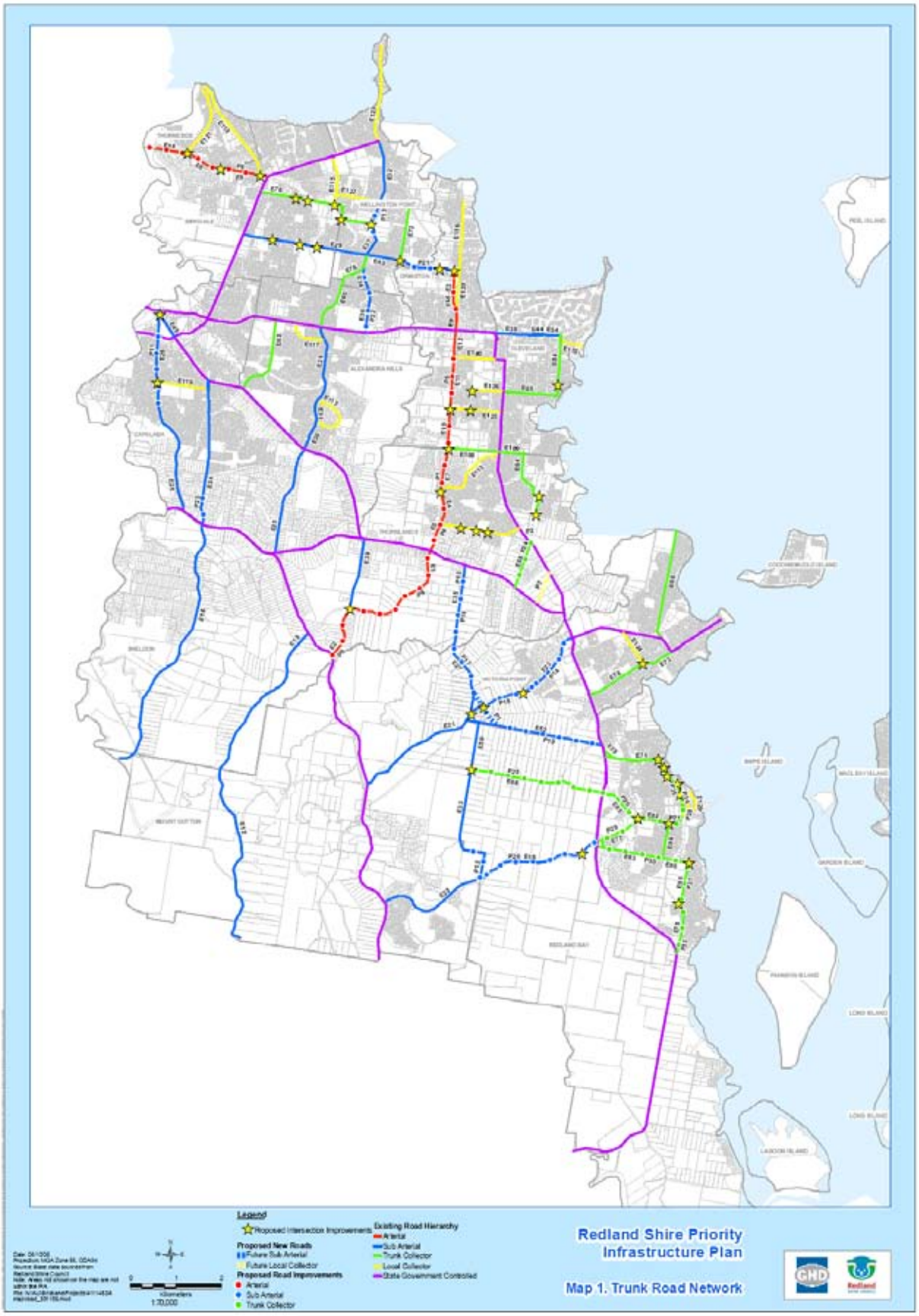

Chapter 4A – Framework for Infrastructure Charges Contributions (Cycleway- Mainland)

3.4A.1 Purpose

(1) The purpose of this policy is to implement an equitable developer contributions scheme for the trunk cycleway network servicing the mainland of Redland City. The contributions will be used to fund new and/or improved infrastructure needed to manage future growth on the City's mainland.

(2) Nature and intention of planning scheme policy

(a) This planning scheme policy sets out the basis for infrastructure contributions for trunk cycleway infrastructure of Redland City. This policy provides the basis for the charges.

(b) A new Priority Infrastructure Plan and related Infrastructure Charges Schedule will ultimately be adopted and form the basis for infrastructure provision. In the interim, this Planning Scheme Policy – Framework for Infrastructure Charges Contributions (Cycleway – Mainland) will be the basis for receiving contributions towards trunk cycleway infrastructure needed to service growth within the city.

(3) Nature of development to which policy applies and triggers

(a) This planning scheme policy applies to material change of use and/or reconfiguration of a lot in Redland City, in relation to the following use:

(i) Aged Persons and Special Needs Housing

(ii) Apartment Building

(iii) Caretakers Dwelling

(iv) Display Dwelling

(v) Dual Occupancy

(vi) Dwelling House

(vii) Multiple Dwelling

(viii) Small Lot House

(b) For Material Change of Use and Reconfiguration of Allotment applications for the stated residential uses, Council will impose a requirement for a contribution to trunk cycleway infrastructure where the development increases demand.

(c) For forms of development other than residential (i.e. commercial or industrial) on the mainland, Council will negotiate an appropriate charge and/or works for cycleway infrastructure with the developer based on likely level of impact.

3.4A.2 Backgrou nd

(1) The need for Cycleway Infrastructure

(a) Strong growth is expected to continue in Redland City creating an increasing demand for on-road and off-road cycle paths and other cycleway infrastructure. To cater for this growth, and to ensure the mainland within the City have an effective cycleway network with the capacity to cater for daily demands, continued upgrades to the network will be required.

(2) Adoption Date and Superseded Policies (if applicable).

(a) The policy came into effect on 29 June 2007 – Resolution of Council General Meeting held on 27 June 2007

3.4A.3 Network Planning Assumptions

(1) Definition of Infrastructure Covered by Policy

(a) The trunk infrastructure covered by this policy includes the following:

(i) Shared Cycle/Pedestrian Path (Off-road);

(ii) Bicycle Facilities (On-road).

(b) This policy applies only to select routes on the mainland that are exclusive of the trunk road network. These routes are illustrated in the maps continued in Appendix B.

(2) Desired Standards of Service

(a) The Desired Standards of Service for cycleways and pathways concern the geometric design considerations that are defined in the Redlands Cycleway and Pedestrian Strategy (see Table 1)

Table 1 Desired Standards of Service

Road Classification	Design Speed (km/hr)	General Design Characteristic
Access Place	-	-
Access Street	30-40	Typically no provisions for cyclists and pedestrians unless shown on maps in Appendix B.
Collector Street	50	2.0m wide shared path on one side of the road, as a minimum.
Trunk Collector Street	60	2.5m wide shared path on both sides of road and 1.5m (min) wide bicycle lanes marked on carriageway.
Sub-Arterial Road	60	2.5m wide shared path on both sides of road and 1.5m (min) wide bicycle lanes marked on carriageway.
Arterial Road	70-80	2.5m wide shared path on both sides of road and 2.0m (min) wide bicycle lanes marked on carriageway.

Note -

In Collector Streets, a minimum 2.0m wide shared use path shall be constructed along all commercial and industrial development frontages.

(3) Planning Areas, Catchment Areas and Planning Criteria

(a) For cycleways and pathways, the planning area is all land on the mainland within the Priority Infrastructure Area. This excludes the Southern Moreton Bay Islands, Coochiemudlo Island and North Stradbroke Island.

(4) Growth Assumptions

(a) Growth assumptions used for this Planning Scheme Policy are those population and household growth rates prepared for Redland City Council's Priority Infrastructure Plan; refer to Tables 2 and 3.

Table 2 Population Growth Rates – Redland Shire Council

Community Of Interest	Population																	
	2004	2005	2006	2007	2008	2009	2010	2011	2012	2013	2014	2015	2016	2017	2018	2019	2020	2021
Alexandra Hills	17,692	17,715	17,738	17,761	17,783	17,806	17,829	17,852	17,884	17,916	17,949	17,981	18,013	18,020	18,026	18,033	18,039	18,046
Birkdale	14,440	14,595	14,749	14,904	15,058	15,213	15,367	15,522	15,762	16,002	16,241	16,481	16,721	16,866	17,011	17,155	17,300	17,445
Capalaba	17,799	18,005	18,212	18,418	18,624	18,830	19,037	19,243	19,555	19,867	20,179	20,491	20,803	20,952	21,100	21,249	21,397	21,546
Cleveland	13,889	14,018	14,148	14,277	14,406	14,535	14,665	14,794	15,049	15,304	15,560	15,815	16,070	16,120	16,170	16,220	16,270	16,320
Ormiston	5,669	5,727	5,786	5,844	5,903	5,961	6,020	6,078	6,239	6,399	6,560	6,720	6,881	6,987	7,093	7,200	7,306	7,412
Redland Bay	9,535	10,102	10,668	11,235	11,801	12,368	12,934	13,501	14,379	15,257	16,135	17,013	17,891	18,489	19,087	19,685	20,283	20,881
Sheldon-Mt Cotton	4,935	5,182	5,429	5,676	5,924	6,171	6,418	6,665	7,066	7,467	7,867	8,268	8,669	9,121	9,573	10,025	10,477	10,929
Thorneside	3,496	3,503	3,510	3,517	3,524	3,531	3,538	3,545	3,591	3,637	3,682	3,728	3,774	3,786	3,799	3,811	3,824	3,836
Thornlands	9,695	10,162	10,628	11,095	11,562	12,029	12,495	12,962	13,731	14,500	15,269	16,038	16,807	17,135	17,464	17,792	18,121	18,449
Victoria Point	13,674	13,924	14,174	14,424	14,673	14,923	15,173	15,423	15,860	16,297	16,735	17,172	17,609	17,696	17,784	17,871	17,958	18,045
Wellington Point	10,196	10,370	10,544	10,718	10,893	11,067	11,241	11,415	11,666	11,917	12,169	12,420	12,671	12,742	12,814	12,885	12,956	13,027
The Bay Islands	6,757	6,913	7,070	7,226	7,382	7,538	7,695	7,851	8,001	8,151	8,301	8,451	8,601	8,753	8,905	9,057	9,209	9,361
Total	127,777	130,216	132,655	135,094	137,534	139,973	142,412	144,851	148,783	152,715	156,647	160,579	164,510	166,668	168,825	170,982	173,140	175,297

Table 3 Household Growth Rates – Redland Shire Council

Community Of Interest	Households																	
	2004	2005	2006	2007	2008	2009	2010	2011	2012	2013	2014	2015	2016	2017	2018	2019	2020	2021
Alexandra Hills	5,951	5,959	5,967	5,975	5,984	5,992	6,000	6,008	6,021	6,034	6,046	6,059	6,072	6,076	6,080	6,085	6,089	6,093
Birkdale	4,888	4,950	5,012	5,074	5,137	5,200	5,263	5,326	5,420	5,514	5,609	5,704	5,800	5,869	5,938	6,008	6,078	6,149
Capalaba	6,290	6,390	6,492	6,594	6,697	6,801	6,906	7,012	7,162	7,314	7,467	7,622	7,779	7,865	7,953	8,041	8,130	8,219
Cleveland	5,661	5,740	5,819	5,900	5,981	6,062	6,145	6,228	6,360	6,493	6,627	6,763	6,899	6,938	6,977	7,017	7,056	7,096
Ormiston	2,106	2,130	2,154	2,179	2,203	2,227	2,252	2,276	2,338	2,400	2,462	2,524	2,586	2,644	2,703	2,763	2,824	2,886
Redland Bay	3,492	3,701	3,911	4,121	4,331	4,542	4,752	4,963	5,289	5,615	5,941	6,268	6,595	6,817	7,039	7,262	7,484	7,707
Sheldon-Mt Cotton	1,614	1,693	1,771	1,850	1,928	2,006	2,084	2,162	2,300	2,439	2,579	2,719	2,861	3,009	3,156	3,303	3,450	3,597
Thorneside	1,489	1,500	1,511	1,523	1,534	1,546	1,557	1,569	1,585	1,600	1,615	1,631	1,646	1,647	1,647	1,648	1,648	1,649
Thornlands	3,341	3,522	3,705	3,890	4,078	4,267	4,459	4,653	4,935	5,218	5,502	5,787	6,072	6,316	6,570	6,835	7,111	7,400
Victoria Point	4,923	5,032	5,142	5,252	5,364	5,476	5,589	5,703	5,891	6,081	6,273	6,467	6,662	6,673	6,684	6,695	6,706	6,717
Wellington Point	3,573	3,642	3,711	3,780	3,850	3,919	3,990	4,060	4,161	4,263	4,365	4,468	4,571	4,612	4,653	4,694	4,736	4,778
The Bay Islands	3,153	3,212	3,271	3,330	3,388	3,445	3,502	3,559	3,616	3,672	3,728	3,784	3,839	3,895	3,952	4,007	4,063	4,118
	46,481	47,472	48,467	49,468	50,473	51,483	52,498	53,519	55,077	56,643	58,215	59,795	61,382	62,362	63,354	64,358	65,377	66,409

3.4A.4 Process for Determining Developer Contributions

(1) The adopted cycleway infrastructure contributions scheme is based on charging new developments on the mainland the shared cost of Council's planned program of trunk cycleway infrastructure upgrading through to the year 2021. The trunk infrastructure elements are identified in the Plans for Trunk Infrastructure, included in Appendix A.

(2) Equitable Apportionment to New Development

(a) The basis for cost apportionment is an equal distribution of the total cost of all trunk cycleway network components on the mainland spread across all residential generators (existing and future) in the Redland City.

(3) Calculating Charges for New Residential Development

(a) Typical equivalent residential allotments (ERA) rates for the range of residential land uses applicable to this policy are presented in Table 4.

(b) The rate of contribution per ERA is in accordance with fees and charges updated annually. The respected contribution rates for infrastructure charges are set out in the local government's current Schedule of Fees and Charges. Contribution rates are reviewed on a regular basis through the local government's budget process.

Table 4 Cycleway Charge per Land Use

Use	Equivalent Residential Allotment	Assessment Unit
Aged Persons and Special Needs Housing		
■ Independent	0.03	Per dwelling
■ Semi-Independent	0.15	Per room
■ Dependent	0.08	Per bed
Apartment Building		
■ One Bedroom	0.30	Per apartment
■ Two Bedrooms	0.60	Per apartment
■ Three Bedrooms	0.80	Per apartment
■ Four or more Bedrooms (Penthouse)	1.00	Per apartment
Caretakers Building	1.00	Per dwelling
Dual Occupancy		
■ One Bedroom	0.30	Per dwelling
■ Two Bedrooms	0.60	Per dwelling
■ Three Bedrooms	0.90	Per dwelling
■ Four or more Bedrooms	1.00	Per dwelling
Dwelling House (detached)	1.00	Per dwelling
Multiple Dwelling		
■ One Bedroom	0.30	Per dwelling
■ Two Bedrooms	0.60	Per dwelling
■ Three Bedrooms	0.90	Per dwelling
■ Four or more Bedrooms	1.00	Per dwelling
Small Lot House	0.62	Per house
Other Residential Uses		
■ One Bedroom	0.30	Per dwelling
■ Two Bedrooms	0.60	Per dwelling
■ Three Bedrooms	0.90	Per dwelling
■ Four or more Bedrooms	1.00	Per dwelling

Note -

The Equivalent Residential Allotment proportions used to calculate the various cycleway charges are the same used in the Planning Scheme Policy – Framework for Infrastructure Charges Contributions (Transport).

(4) Indexation

(a) Developer contribution rates for cycleway infrastructure are in August 2006 dollars. Contributions payable shall be at the rate applicable at the time of payment. The cycleway Infrastructure Charge will be indexed on 1st July each year by the Australian Bureau of Statistics Road and Bridge Construction Index.

(5) Subsidies and grants

(a) Any subsidies or grants that could be identified at the time of the planning for the Plans for Trunk Infrastructure have been removed from the overall cost of facilities.

(6) General Requirements for Credit

(a) There may be circumstances where the proposed development receives credit for previous contribution from the same development for cycleway infrastructure. In these cases the previous contribution, if paid for cycleway infrastructure, may provide the basis for credits for the cycleway infrastructure provided by this policy.

(b) The determination of how a developer contribution is paid is at the discretion of Council. In cases where credits apply, credits will be available to offset the infrastructure charges required by this Planning Scheme Policy.

(7) Creditable Contributions

(a) Generally and at its discretion, Council will seek either a financial contribution based on the above charge rates, works and/or land in lieu in accordance with the Infrastructure Contribution Schedule projects (refer Appendix A) and individual infrastructure agreements.

(b) Where a condition of development approval (by Council) required the applicant to undertake works and/or dedicate land which are identified as part of the infrastructure charges schedule it is appropriate for the Council to offset the agreed costs of such works and/or land from the Cycleway Infrastructure Charge contribution. The value of the works will need to be agreed to by Council prior to the works commencing and documented in an Infrastructure Agreement.

(c) Credit may be sought for previous cycleway infrastructure contributions attached to a parcel of land where conclusive documentation is presented to Council that detail:

(i) How and the extent to which the previous charges or works complies with requirements of the Infrastructure Contributions Schedule;

(ii) The date the previous charges works was dedicated to Council;

(iii) The lawful development potential and actual development that accompanied the chargers for works; and

(iv) A breakdown of credit per lot for each lot that resulted from a previous residential material change in use or reconfiguring of a lot for which credit is sought.

(d) An existing use has a credit value as stated in Table 4.

3.4A.5 Charge Areas

(1) The mainland cycleway charge will apply to all future residential development on the mainland within the Priority Infrastructure Area that increases the demand on the transport network.

(2) Definition of Charge Areas

(a) A single charge applies to cycleway infrastructure on the mainland. There is no charge for cycleway infrastructure on the Southern Moreton Bay Islands, Coochiemudlo Island and North Stradbroke Island.

(3) Existing Approvals and Infrastructure Agreement Areas

(a) Existing Infrastructure Agreements are not subject to this policy.

(b) All Community Title Schemes or similar development will be charged in accordance with the rates in Table 4.

3.4A.6 Cost and Timing of Infrastructure

(1) Details regarding cost and timing of infrastructure can be found in supporting documents – Refer to Infrastructure Charges Schedule in Appendix A.

3.4A.7 Calculating Infrastructure Contributions

(1) The process for determining the cycleway infrastructure charge for different development types is set out in a separate calculation guideline.

Note –

If the development does not achieve the densities as set out in the Redland Planning Scheme, the developer is required to pay the developer contribution in accordance with planned densities as stated in the Redland Planning Scheme.

3.4A.8 Form of Contribution

(1) Generally and at its discretion, Council will seek either a financial contribution based on the above charge rates, works and/or land in lieu in accordance with the Infrastructure Charges Schedule projects (refer Appendix A) and individual Infrastructure agreements.

3.4A.9 Terms and Definitions

"lot" A separate distinct parcel of land created on the registration on a plan of subdivision, under the land title act 1994.

3.4A.10 Appendices

Appendix A – Cycleway Infrastructure Charges Schedule.

Appendix B – Plans for Trunk Infrastructure.

Contributions and Security Bonding - Chapter 4A

Appendix A – Cycleway Infrastructure Charges Schedule

Appendix A - Cycleway Infrastructure Charges Schedule

Map Reference	Description	Upgrade Type	Length (m)	Existing Infrastructure Value	Upgrade Cost in millions	Construction Period
P7	Burbank Road; Barron Road between Burbank and Bailey Roads; Old Cleveland Road between Birkdale Road East and Randall Roads; Bailey Road between Old Cleveland Road East and Denice Street; Valantine Road between Bluebell Street and Bailey Road; and along c	Off-Road Shared Cycle Path	5537		$1.17	2006 - 2011
P17	MacMillan Road between McDonald Road and Rmanby Street; through Bushland Refuge from Rmanby Street to Robins Road; Robins Road from Bushland Refuge to Finucane Road; Bushland Refuge through to Lucy Court; Finucane Road between Delancey Street and McDonald	Off-Road Shared Cycle Path	7646		$1.62	2006 - 2011
P18	Oaklands Street and Cambridge Drive.	Off-Road Shared Cycle Path	1088		$0.23	2006 - 2011
P19	In park land south of Trelleck Court.	Off-Road Shared Cycle Path	218		$0.05	2006 - 2011
P24	Cleveland-Redland Bay Road from Dinwoodie Road to Driftwood Street; Bevridge Road between Rachow Street and Cleveland-Redland Bay Road; Rachow Street to Pinklands; along Eprapah Creek between Cleveland-Redland Bay Road and Creekside Circuit; from Creekside	Off-Road Shared Cycle Path	12007		$2.54	2006 - 2011
P8	Bluebell Street between Valantine Street and Randall Road; Abelia Street-Valantine Road between Bailey and Finucane Roads; Willard Road; Daveson Road-Lawn Terrace through to Abelia Street; Valantine Road between Daveson Road and Abelia Street; William Str	Off-Road Shared Cycle Path	8298		$1.76	2006 - 2011
P9	Collingwood Road between Haig and Pitt Roads; Pitt Road; Hardy Road between Collingwood and Marlborough Roads; Birdwood-Malborough Roads between Paul Street and Main Road; Canegrove Circuit through to Malborough Road; Cedarview Place; Breezeway Close; Riv	Off-Road Shared Cycle Path	8586		$1.82	2006 - 2011
P10	Allan Day Drive and Wolton Way.	Off-Road Shared Cycle Path	606		$0.13	2006 - 2011
P11	Main Road between Beachcrest Road to Champion Lane; and around Esplanade.	Off-Road Shared Cycle Path	2395		$0.51	2006 - 2011
P12	Douro Road and Main Road between Douro and Birkdale Roads.	Off-Road Shared Cycle Path	909		$0.19	2006 - 2011
P35	Boundary Street; Broadwater Terrace between North and Boundary Streets; Broadwater Terrace between Boundary and Peel Streets; Hamilton Street between Peel and Pitt Streets; Pitt Street from Hamilton to Salisbury Streets; Weinam Street from Salisbury to Me	Off-Road Shared Cycle Path	9272		$1.96	2006 - 2011
P13	Aspley Street; Duke Street; Chermside Street; Valley Road; Harris Street; Fernbourne Road; and alonside rail line between Station and Duncan Streets.	Off-Road Shared Cycle Path	2596		$0.55	2011 - 2016
P15	Dundas Street East and along coast from Beckwith Street through to Dundas Street.	Off-Road Shared Cycle Path	1181		$0.25	2011 - 2016
P26	Redland Bay Road between Ney Road and Windemere Road; Windemere Road between Redland Bay Road and Kindred Court; Redland Bay Road between Ney Road and the intersection of Duncan and Boundary Roads; Merriot Court; from Merriot Court through Frampton Street	Off-Road Shared Cycle Path	8743		$1.85	2011 - 2016
P27	Ney Road between Redland Bay Road and Callaghan Court; along creek through Maridale Park; Callaghan Way from Redland Bay Road to Frost Street; Redland Bay Road between Ney Road and Old Cleveland Road; Pittwin Road North; Old Cleveland Road between Shire B	Off-Road Shared Cycle Path	8907		$1.89	2011 - 2016
P28	Ney Road between Degen Road and Guyana Court.	Off-Road Shared Cycle Path	443		$0.09	2011 - 2016
P29	Valley Way between Mount Cotton Road and German Church Road; and small section opposite Village Drive.	Off-Road Shared Cycle Path	2962		$0.63	2011 - 2016
P31	Point O'Halloran Road between Bayswater Drive and intersection with Egret Drive; Egret Drive; and Orana Street.	Off-Road Shared Cycle Path	3542		$0.75	2011 - 2016
P32	Masters Avenue.	Off-Road Shared Cycle Path	800		$0.17	2011 - 2016
P33	Thompson Street.	Off-Road Shared Cycle Path	415		$0.09	2011 - 2016
P30	Link Road/Bangalow Street/Glen Road; Benfer Road between Redland Bay Road and Colburn Avenue; Strachan Road; Fir Street; Robin Parade; and Link Road between Benfer and Colburn Roads.	Off-Road Shared Cycle Path	4321		$0.92	2011 - 2016
P60	Starts at Sel Outridge Parka and travels along the coast before ending at the intersection of the School of Arts Road/Wilson Esplanade.	Moreton Bay Cycle Path	2613		$1.64	2011 - 2016
P61	Alongside coast between Bengston Park and Talburpin Park.	Moreton Bay Cycle Path	870		$0.55	2011 - 2016
P62	From Hilliard Street along coast past Endeavour and Columbus Canals along Shore Street West to the beginning of North Street.	Moreton Bay Cycle Path	5860		$3.69	2011 - 2016
P56	Starts near Lang Street in Wetlands and end at the intersection of Main and Beachcrest Roads.	Moreton Bay Cycle Path	4841		$3.05	2011 - 2016
P59	Starts at Victoria Point and travels along the coast before ending at Redland Bay Golf Club.	Moreton Bay Cycle Path	4877		$3.07	2011 - 2016
	Moreton Bay Cycle Path boardwalk and bridge widening	Moreton Bay Cycle Path			$6.17	2016 - 2021
P1	Mooroondu Road between Nora Street and Fisher Road.	Off-Road Shared Cycle Path	923		$0.20	2016 - 2021
P2	Ferry Road between Esplanade and Thorneside Road.	Off-Road Shared Cycle Path	633		$0.13	2016 - 2021
P3	Commodore Drive	Off-Road Shared Cycle Path	347		$0.07	2016 - 2021

Appendix A - Cycleway Infrastructure Charges Schedule

Map Reference	Description	Upgrade Type	Length (m)	Existing Infrastructure Value	Upgrade Cost in millions	Construction Period
P4	Agnes Street between Thorne and Birkdale Roads; Birkdale Road between Mary Street and Mary Pleasant Drive; Napier Street; Myra Street; Keppell Street between Myra Street and Birkdale Road; and alongside Tarradarrapin Creek in Tarradarrapin Wetlands.	Off-Road Shared Cycle Path	2408		$0.51	2016 - 2021
P5	Collingwood Road between Birkdale Road and Lachlan Street; and Birkdale Bushland Refuge.	Off-Road Shared Cycle Path	957		$0.20	2016 - 2021
P6	Clive Road; Creek Road; and Byng Road.	Off-Road Shared Cycle Path	2925		$0.62	2016 - 2021
P14	Armagh Street; McCartney Street; Wellington Street between McCartney and Sturgeon Streets; and Beckwith Street to Wellington Street.	Off-Road Shared Cycle Path	2936		$0.62	2016 - 2021
P16	Bainbridge Street East between Gordon and Nelson Streets; Freeth Street East; alonside rail line between Bainbridge Street East and Black Swamp Wetlands; Shorestreet West between Waterloo Street and Delancey Street; Delancey Street between Finucane Road a	Off-Road Shared Cycle Path	6643		$1.41	2016 - 2021
P20	Bradworthy Street and Pensilva Court.	Off-Road Shared Cycle Path	355		$0.08	2016 - 2021
P21	North Street; Shore Street North between Paxton Street and North Street; along GJ Walter Park; Middle Street between GJ Walter Park and Passage Street; Wharf Street to Middle Street; Passage Street between Shore Street West and Long Street; Russell Street	Off-Road Shared Cycle Path	9476		$2.01	2016 - 2021
P22	South Street; Enterprise Street; Swallow Street; Smith Street between South Street and Long Street; Bay Street between Wellington and creek; South Street between Thornlands Primary and Manning Esplanade.	Off-Road Shared Cycle Path	7317		$1.55	2016 - 2021
P23	Thornlands Road between Baythorn Drive and Moreton Road; Moreton Road; along creek between William Stewart Park and Crystal Waters Park; Noir Court; and King Street.	Off-Road Shared Cycle Path	4234		$0.90	2016 - 2021
P25	Broadwater Road-Mount Cotton Road between Shire boundary and intersection with Lyndon Road; Mount Cotton Road between intersection with Lyndon Road and West Mount Cotton Road.	Off-Road Shared Cycle Path	6896		$1.46	2016 - 2021
P34	Redland Bay Road between the intersection with Boundary Road to intersection with Serpentine Creek Road; German Church Road between School of Arts Road and Snipe Court; and along creek from School of Arts Road to Pelorus Street.	Off-Road Shared Cycle Path	6334		$1.34	2016 - 2021
P36	Muller Street between Cleveland-Redland Bay Road and Donald Street; between Cleveland-Redland Bay Road and Larkspur Street; Donald Road-Unwin Road between Cleveland-Redland Bay Road and School of Arts Road; Donald Road between Donald Road and Collins Stre	Off-Road Shared Cycle Path	9742		$2.06	2016 - 2021
P37	Redland Bay Road between the intersection with Serpentine Creek Road to just before the intersection with Lagoon View Road.	Off-Road Shared Cycle Path	3322		$0.70	2016 - 2021
P57	Starts at intersection of Main and Beachcrest Roads and ends at intersection of Thornesdie and Quarry Roads.	Moreton Bay Cycle Path	6591		$4.15	2016 - 2021
P58	Eddie Santaguliana Way - starts at Les Moore Park (Redland Bay) travels largely along the coast before ending at South Street (Cleveland).	Moreton Bay Cycle Path	8413		$5.29	2016 - 2021

Appendix A - Cycleway Infrastructure Charges Schedule

Map Reference	Description	Upgrade Type	Length (m)	Existing Infrastructure Value	Upgrade Cost in millions	Construction Period
E21		Off-road shared	2443	$0.31		
E22		Off-road shared	5913	$0.74		
E23		Off-road shared	599	$0.07		
E24		Off-road shared	13236	$1.65		
E25		Off-road shared	2142	$0.27		
E26		Off-road shared	4356	$0.54		
E27		Off-road shared	1565	$0.20		
E1		Off-road	1885	$0.24		
E2		Off-road	9132	$1.14		
E3		Off-road	7065	$0.88		
E4		Off-road	2398	$0.30		
E5		Off-road	6703	$0.84		
E6		Off-road	1819	$0.23		
E7		Off-road	299	$0.04		
E8		Off-road	3875	$0.48		
E9		Off-road	14007	$1.75		
E10		Off-road	2794	$0.35		
E11		Off-road	190	$0.02		
E12		Off-road	4420	$0.55		
E14		Off-road	1234	$0.15		
E15		Off-road	677	$0.08		
E17		Off-road	942	$0.12		
E18		Off-road	1208	$0.15		
E19		Off-road	220	$0.03		
E20		Off-road	204	$0.03		
E36		Moreton Bay: Off-road shared	1232	$0.78		$ 184,800
E37		Moreton Bay: Off-road shared	4586	$2.89		$ 687,900
E38		Moreton Bay: Off-road shared	1096	$0.69		$ 164,400
E39		Moreton Bay: Off-road shared	925	$0.58		$ 138,750
E40		Moreton Bay: Off-road shared	1094	$0.69		$ 164,100
E41		Moreton Bay: Off-road shared	737	$0.46		$ 110,550
			TOTALS	$17.25	$60.64	

Notes:
1. Upgrade costs are in 2006 dollars
2. Costs are in millions of dollars
3. Construction period is indicative only and will be reviewed depending on development pressures.
4. Upgrade costs include a 25% contingency amount.

Appendix B – Plans for Trunk Infrastructure

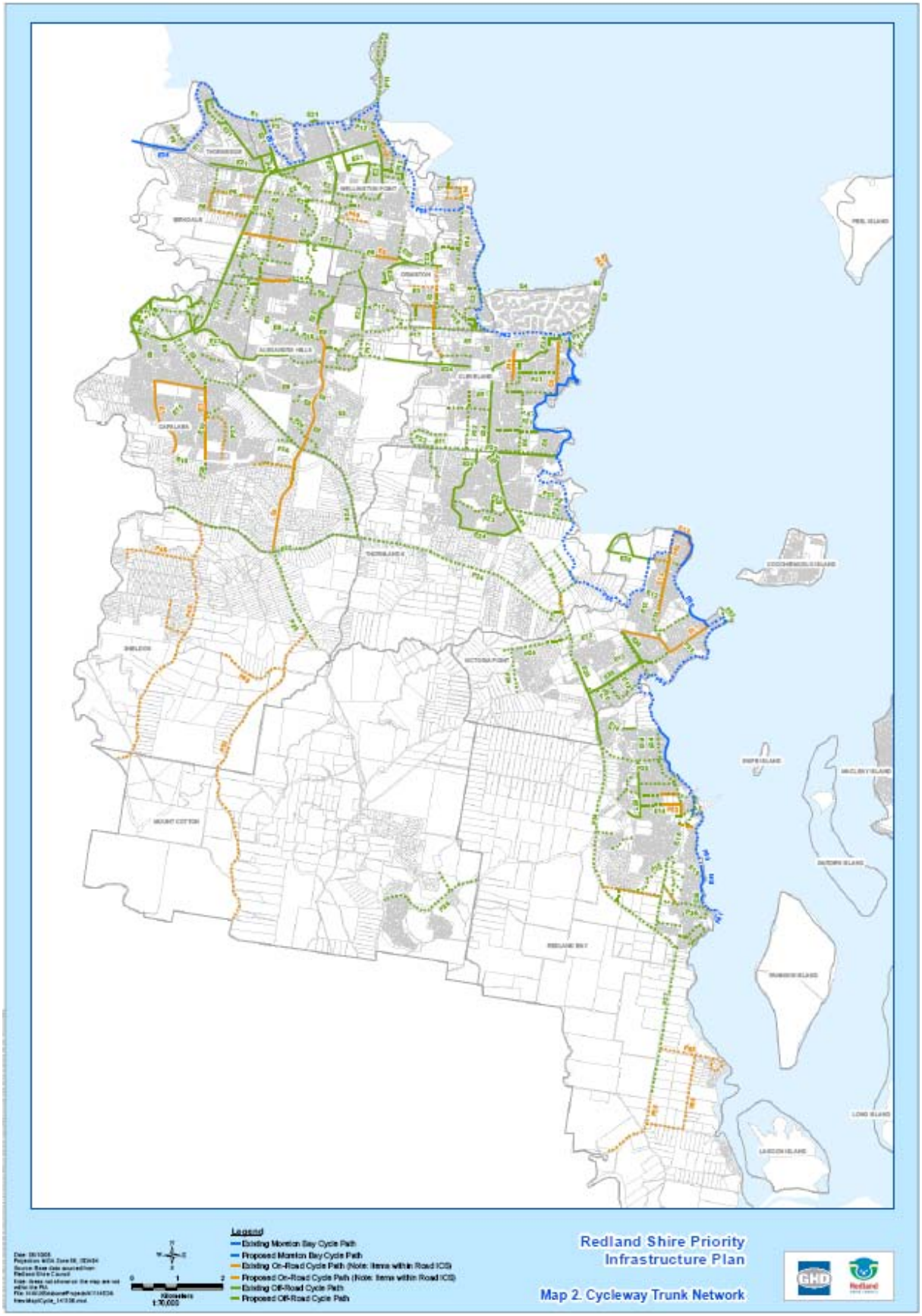

this page purposely
left blank

Chapter 5 - Open Space

3.5.1 Purpose

(1) To outline the interim requirements, circumstances and nature of open space contributions required by development and to ensure that contributions -

(a) reflect the additional need and cost of providing open space generated by development;

(b) are generally consistent with the local government's *Open Space Plan 2004 - 2016* and the hierarchy of parks identified in that plan;

(c) are equitable in terms of the type of contribution;

(d) are designed so that the open space is suitable for the function identified.

3.5.2 Applicabilit y

(1) This policy applies to development that involves -

(a) standard format reconfiguration, whether or not including a community management statement; or

(b) material change of use for the following residential use categories -
(i) dual occupancy;
(ii) multiple dwelling;
(iii) apartment building;
(iv) aged persons and special needs housing;
(v) mobile home park.

(2) This policy does not apply to the Emerging Urban Community Zone. Refer to Planning Scheme Policy 15 - Emerging Urban Community.

3.5.3 Primary Objectives of this Policy

(1) The primary objectives of the policy are to ensure -

(a) adequate areas of local, district and regional open space are provided based on the local government's *Open Space Plan 2004 - 2016*, and any subsequent studies, carried out by the local government to assess open space need;

(b) open space areas are designed and constructed to enhance the conservation of native flora and fauna in such a way as to enhance environmental values of the area;

(c) waterways, wetlands and foreshore areas are maintained, as far as possible, in their natural state.

(2) This policy does not set out how monetary contributions received by the local government, as a condition of development, will be spent. Conditions of development may indicate how and when such monetary contributions are spent.

3.5.4 Contributions - General

(1) The Open Space Zone on premises is indicative of land that forms part of the open space network and includes land identified or required for flood immunity, environmental values and active and passive recreational purposes. It is not intended to reflect the sole open space contribution required by development.

(2) A land contribution, dedication for open space, is required to meet the size, locational and standards of provision as contained in Part 7, Division 11 - Reconfiguration and Chapter 10 of Planning Scheme Policy 9 - Infrastructure Works.

(3) The local government may require monetary contributions in lieu of dedication of land, in the following circumstances -

(a) where the area of land to be dedicated for open space is of insufficient size or dimension or unsuitable due to physical site characteristics to meet the local government needs and standards of provision; or

(b) where local government determines there is no need for additional open space in the development site; or

(c) where, in the opinion of the local government, there is no opportunity or benefit of linking public open space areas to the existing or future open space network.

(4) Acceptance of monetary contributions by the local government does not imply that the contribution will be used immediately.

(5) Monetary contributions will be used in the suburb or nearest adjoining suburb from where the contribution was received.

(6) Monetary contributions will be used for open space purposes, based on an identified need within the local government area including -

(a) as a contribution toward the upgrading or renovation of existing open space; or

(b) as a contribution toward the acquisition of land for open space; or

(c) a combination of above.

3.5.5 Land Contribution for Open Space

(1) The use of the term "open space" in this section excludes land which is -

(a) a drainage path, being land below 5 percent AEP (1 in 20 ARI);

(b) below the 2.4 metre AHD for storm tide level;

(c) encumbered by an easement of any sort;

(d) primarily a detention basin or water quality treatment device;

(e) a landscape, visual or noise buffer;

(f) dedicated for private use and is not available for broader public use.

(2) When assessing the area of land dedicated for open space purposes, the local government will take into consideration the following -

(a) that the area is suitable for the type of open space required;

(b) whether or not the land is suitably located;

(c) whether the applicant proposes to carry out works to the land being dedicated or proposes to make a monetary contribution in addition to the land being dedicated for open space;

(d) the combination of land dedication, monetary contributions and works within the area of land being dedicated for open space purposes.

(3) Refer to Table 1 to determine the land dedication requirements for local park open space purposes.

(4) The application is supported by a plan or information to demonstrate compliance with -

(a) Table 1;

(b) The standards of provision as contained in Chapter 10 of Planning Scheme Policy 9 - Infrastructure Works and Part 7, Division 11 - Reconfiguration.

(5) In the event that the land dedicated for open space is less than the size required and does not meet the standards of provision contained in Chapter 10 of Planning Scheme Policy 9 - Infrastructure Works and Part 7, Division 11 - Reconfiguration, the local government will determine in accordance with Table 1 - Contributions for a Local Park if -

(a) additional land is to be dedicated for open space; or

(b) a monetary contribution is required in addition to the land dedicated; or

(c) the applicant is required to carry out works within the area of land dedicated; or

(d) a combination of (a) - (c) is required.

3.5.6 Monetary Contribution for Open Space

(1) The local government determines the amount of monetary contribution made for open space purposes in-lieu or in addition to dedicating land.

(2) For standard format reconfiguration of a lot creating three (3) or less lots in the Urban Residential or Low Density Residential Zone and -

(a) where subsequent material change of use may be self-assessable; or

(b) where not subject to a community title scheme,

the monetary contribution is $3,500 per additional lot;

(c) for the purposes of s3.5.6(2), the term “additional lot” means the number of lots created by a development approval for reconfiguration minus one (1) lot, being the original lot before reconfiguration.

(3) For all other standard format reconfiguration whether or not community management statement -

(a) the monetary contribution -
- (i) is based on an acceptable valuation;
- (ii) equates to -
  - a. 33.6m^2 per additional lot for a local park and as required in Table 1 - Contributions for a Local Park;
  - b. 67.2m^2 per additional lot for a District Park;

(b) for the purposes of section 3.5.6 the term “acceptable valuation” means -
- (i) a valuation undertaken by a registered valuer determined by reference to the market value of the land the subject of the application immediately prior to its reconfiguration and must -
  - a. have regard to any development approval to change the use of the land;
  - b. be based on the total area of the land the subject of the application as a serviced englobo parcel including any land proposed to be dedicated for open space purposes;
  - c. not take into account any value added to the land by the installation of reticulated urban services to each lot with the proposed reconfiguration or change in use of the land;

d. not take into account any land dedicated to, or otherwise taken or used by, the local government for roads, pathways, bikepaths, drainage reserves or areas set aside for stormwater quality treatment; or

(ii) a valuation obtained by the local government where -

a. the applicant either refuses or fails to provide the local government with an acceptable valuation; or

b. the local government does not agree with the valuation submitted by an applicant for the purpose of calculating a contribution under section 3.5.6;

(c) where the development application does not contain an acceptable valuation as part of the supporting information to the application, the local government may require as part of an Information Request a requirement that an acceptable valuation be provided;

Note -

The 33.6m^2 is calculated by a need of 1.2 hectares of local park land per 1000 people with 2.8 persons per dwelling unit, 12000/1000 x 2.8 = 33.6m^2. The 67.2m^2 is calculated by a need of 2.4 hectares of district park land per 1000 people with 2.8 persons per dwelling unit, 24000/1000 x 2.8 = 67.2m^2.

(d) the monetary contribution for open space as required in s3.5.6(3) may be adjusted by the local government to reflect any dedication of land for open space purposes and/or if the applicant is required to carry out any works within the area of land dedicated for open space purposes.

(4) For development that is a material change of use or reconfiguration, that is not a standard format subdivision -

(a) the contribution rate is calculated by reference to the density of the development in accordance with Table 3;

(b) notwithstanding the provisions of s3.5.6(4)(a), the monetary contribution required for open space purposes for a residential development consisting of two (2) dwelling units on a single lot is $3,500;

(c) for the purposes of s3.5.6(4), the term -

(i) “site area” means -

a. for land to be developed for a tourist park or mobile home park - the area of land to be occupied by the caravan or mobile home unit component of the development; or

b. for land to be developed for aged persons and special needs housing - the area of land to be occupied by the dwelling unit component of the development; or

c. in all other cases, the total area of the land the subject of the application;

(ii) “additional dwelling unit” means -

a. a dwelling unit proposed to be established on the premises in addition to any existing lawfully present dwelling units on the premises at the time a development application is made to increase the number of dwelling units on the premises; or

b. where the dwelling unit is proposed to be established on a vacant lot - all dwelling units except for the first dwelling unit (in recognition that a contribution is not required for a single dwelling unit on an existing titled lot).

Table 1 - Contributions for a Local Park

Premises	Local park gap identified in suburb or adjoining suburb - refer to Table 2		No local park gap identified in suburb or adjoining suburb
	Within 500m of an existing local park - refer to Map 1	**Outside 500m of an existing local park - refer to Map 1**	
Premises contains land zoned Open Space	Dedication of land that is zoned Open Space If the park is not embellished to the local government's desired standard, a monetary contribution will be required in addition to this dedication **Note -** The monetary contribution will not exceed the value of 33.6m^2 per additional lot and will take into consideration the amount and type of land (if it is not constrained by overlays) dedicated as open space.	(1) Provide a local park through - (a) land that is zoned Open Space and demonstrate that zoned land meets the local government standards of provision and criteria as outlined in Note[1] below; (b) where (a) cannot be achieved, provide land that is zoned Open Space and a mix of additional land and monetary contribution as determined by the local government	Dedication of land that is zoned Open Space If the park is not embellished to the local government's desired standard, a monetary contribution will be required in addition to this dedication **Note -** The monetary contribution will not exceed the value of 33.6m^2 per additional lot and will take into consideration the amount and type of land (if it is not constrained by overlays) dedicated as open space.
Premises does not contain land zoned Open Space	Pay monetary contribution based on value of 33.6m^2 per additional lot	(1) Provide a local park through - (a) for premises greater than 2 hectares in area, a park/s that meet the local government standards of provision, including catchment criteria; (b) for premises less than 2 hectares in area, a monetary contribution based on value of 33.6m^2 per lot; or (c) a mix of (a) and (b) as determined by the local government	Pay monetary contribution based on value of 33.6m^2 per additional lot

Note[1] -

The standards of provision include the local park being a minimum size of 2000m^2 -

- with 50 percent of this 2000m^2 above the 1 percent AEP;
- does not include land affected by bushland habitat, ecological corridor or koala coast on the Habitat Protection Overlay;
- does not include land affected by waterway, wetland or Moreton Bay buffers, in the overlay of the same name.

Table 2 - Local Park Gap Identified in Suburb or Adjoining Suburb

Suburb	Local park gap identified in suburb or adjoining suburb	
	Yes	No
Alexandra Hills	Yes	
Birkdale	Yes	
Capalaba	Yes	
Cleveland		No
Coochiemudlo Island	Yes	
Mount Cotton	Yes	
North Stradbroke Island		No
Ormiston	Yes	
Redland Bay	Yes	
Sheldon	Yes	
Southern Moreton Bay Islands	Yes	
Thorneside	Yes	
Thornlands	Yes	
Victoria Point	Yes	
Wellington Point	Yes	

Table 3 - Contribution Rate for Material Change of Use or Reconfiguration that is not a Standard Format Reconfiguration

Development Density	Contribution Amount
1 dwelling unit per 400m^2 or greater of site area	$4,500 per additional dwelling unit
1 dwelling unit per 200 - 400m^2 of site area	$3,500 per additional dwelling unit
1 dwelling unit per 200m^2 or less of site area	$2,700 per additional dwelling unit

Map 1 - Local Parkland Contributions Map

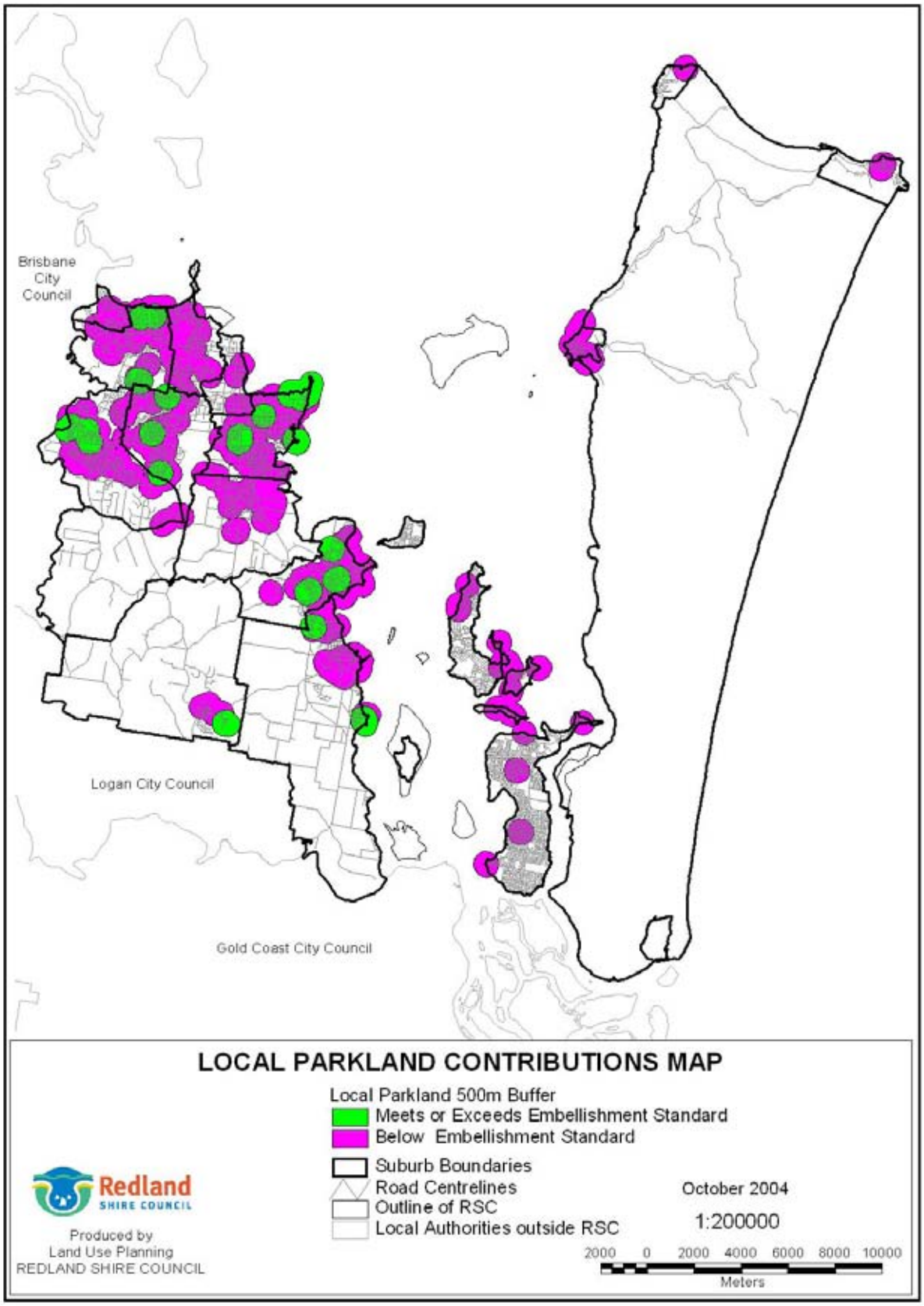

this page purposely
left blank

Chapter 6 - Security Bonding

3.6.1 Purpose

(1) To outline the minimum requirements for security bonds and the standards with which to properly administer the receipt, control and return of bonds.

(2) The purpose of security bonding is to achieve security for satisfactory completion of works.

3.6.2 Applicabilit y

(1) The policy applies to -

(a) all infrastructure external to the premises;

(b) all public infrastructure contained within the premises;

(c) landscaping works;

(d) areas of particular performance during completion of works under a development permit;

(e) As-Constructed information.

3.6.3 Definitions

(1) Bill of Quantities - means a fully priced list, certified by a Registered Professional Engineer of Queensland, of the development works and maintenance responsibilities that will be transferred to the local government at the end of the On-Maintenance period.

(2) Maintenance Bond - means a type of security bond submitted to the local government by the applicant as a defects liability bond during the On-Maintenance period to cover the costs of maintenance works on the development works or to landscaped areas that are to be transferred to the local government after the satisfactory completion of the On-Maintenance period.

(3) On-Maintenance - means a period specified by the local government, for the maintenance of works that are to be transferred to the local government. This period of time commences after the formal acceptance of the works completed by the local government.

(4) Off-Maintenance - means the formal acceptance by the local government of the transfer of works and maintenance responsibility to the local government by the applicant after the satisfactory completion of the On-Maintenance period.

(5) Performance Bond - means a type of security bond submitted to the local government by the applicant prior to the commencement of development works to secure the completion and fulfillment of specific conditions of a development permit inclusive of any works carried out on-site and in the public realm.

(6) Significant Vegetation - means 'significant vegetation' as defined in Redland City Council *Local Law No. 6 Protection of Vegetation*, as amended.

(7) Significant Vegetation Protection Bond - means a type of security bond submitted to the local government by the applicant prior to the commencement of works on site, to secure and protect significant vegetation which may be affected by development works.

(8) Uncompleted Works Bond - means a type of security bond submitted to the local government by the applicant prior to the completion of all development works to cover the cost of uncompleted works where the applicant wished to obtain from the local government the early signing and sealing of Survey Plans.

3.6.4 Securit y Bonds

3.6.4.1 Types of Security Bonds

(1) The five broad categories of security bonds adopted by the local government are -

(a) Performance Bonds;

(b) Significant Vegetation Protection Bonds;

(c) Uncompleted Works Bonds;

(d) As-Constructed Information Bonds;

(e) Maintenance Bonds.

3.6.4.2 Performance Bonds

(1) Performance Bonds are security bonds submitted to the local government by the applicant before development works commence, to secure the completion and fulfillment of specific conditions of a development permit or performance requirements of the planning scheme, inclusive of any development works carried out on-site and in the public realm.

(2) The particular bond amount is subject to the type and scale of development works carried out on-site and in the public realm, and is indicated as a condition of development approval.

(3) Performance Bonds are refundable after formal acceptance by the local government of the compliant condition of development works carried out, generally at the beginning of the On-Maintenance period. It should be noted that a Maintenance Bond might be required after the completion of works and the refund of the Performance Bond.

3.6.4.3 Significant Vegetation Protection Bonds

(1) Significant Vegetation Protection Bonds are security bonds submitted to the local government by the applicant before development works commence, to secure and protect significant vegetation which may be affected by development works.

(2) The particular bond amount is subject to the type of vegetation, the scale of vegetation protection, and the level of risk to the significant vegetation.

(3) The On-Maintenance period is subject to the particular vegetation type, seasonal effects and the type of risk the vegetation is exposed to.

(4) The bond amount and On-Maintenance period is indicated as a condition of development approval.

(5) The monetary amount required for a Significant Vegetation Protection Bond is calculated on a site- and vegetation-specific basis.

(6) The bond amount is calculated by estimating the cost to cover the removal of the vegetation and replacement of the same species or maturity of vegetation where this is possible or at the discretion of the local government.

(7) Significant Vegetation Protection Bonds are refundable after formal acceptance by local government of the satisfactory protection of significant vegetation Off-Maintenance.

3.6.4.4 Uncompleted Works Bonds

(1) Uncompleted Works Bonds are security bonds submitted to the local government by the applicant before completion of all works and the satisfactory completion of all conditions of development approval, in order to cover the costs of uncompleted development works where the applicant wishes to obtain from the local government the approval of survey plans.

(2) The local government will accept Uncompleted Works Bonds to release the approval of survey plans subject to, but not limited to, completion of the following level of works as detailed in Table 1 - Level of Completion of Works.

Table 1 - Level of Completion of Works

Type of Works	Level of Completion of Works
Construction and Earthworks	(1) 100 percent of earthworks are completed and stabilised to the local government's satisfaction; (2) 100 percent of the kerb and channel are completed to the local government's satisfaction; (3) Roads are certified by an authorised surveyor that the roads are within the correct alignment, where applicable; (4) 50 percent of the total value of construction works are completed to the local government's satisfaction.
Sewerage and Water Supply Works	(1) 100 percent of the total value of sewerage and water supply works, both external and internal reticulation and drainage works, are completed to the local government's satisfaction; (2) All testing results and preliminary As-Constructed information is provided to the local government.

(3) Before releasing the survey plans, the local government is satisfied that all works and services will be completed and operational within 3 months of receiving an Uncompleted Works Bond or by the time the initial development is completed, whichever is sooner.

(4) For all uncompleted works the local government requires certification from a registered professional engineer of Queensland in the form of a fully priced bill of quantities, detailing works completed and works remaining to be completed.

(5) The applicant is required to lodge a formal request with the local government for the particular bond amount.

(6) The local government will notify the applicant of the relevant security bond amount.

(7) The Uncompleted Works Bond is to the greater value of either -

(a) 120 percent of the estimated uncompleted works costs; or

(b) $5000.

(8) Uncompleted Works Bonds are refundable after formal acceptance by the local government of the satisfactory completion of works 'On-Maintenance.' It should be noted that a Maintenance Bond will also be required after the completion of works and the refund of the Uncompleted Works Bond.

3.6.4.5 <u>As-Constructed Information Bonds</u>

(1) As a result of the local government review of the As-Constructed information and On-Maintenance inspection of the completed works, the As-Constructed information and/or documentation may require amendment. If this is necessary and it is appropriate to place the development On-Maintenance, then the As-Constructed Information Bond is applicable before the On-Maintenance approval is issued.

(2) Before the local government formally accepts the development works On-Maintenance where amended As-Constructed information is required, the applicant is to lodge a bond for the security of the preparation of As-Constructed information, as applicable, of -

(a) $2000 per additional lot for reconfigurations; or

(b) $1000 per additional dwelling unit for a material change of use; or

(c) 2.5 percent of the construction costs of a building for a material change of use, whichever is the greater.

(3) Amendments to As-Constructed drawings or documentation required by the local government are completed and the information resubmitted to the satisfaction of the local government.

(4) Once the As-Constructed information is resubmitted, 60 percent of the As-Constructed Information Bond is returned. The remaining 40 percent of the bond is returned after the final As-Constructed information is approved by the local government.

(5) The resubmission of the As-Constructed information is required within one month of the development going On-Maintenance.

(6) Non-compliance with resubmission of amended As-Constructed information within this period may result in -

(a) the On-Maintenance period being extended for the time that the As-Constructed data is outstanding; or

(b) the As-Constructed information bond being forfeited to cover all costs incurred by the local government in the capture and presentation of information.

3.6.4.6 Maintenance Bonds

(1) Maintenance Bonds are security bonds submitted to the local government by the applicant to cover the costs of maintenance works on development works or landscaped areas during the On-Maintenance period as a defects liability bond.

(2) All works and landscaped areas that are to be transferred to the local government are maintained by the applicant for a period specified in Part 11 - Planning Scheme Policy 9 - Infrastructure Works or other period advised by the local government.

(3) The On-Maintenance period commences following inspection by the local government of the completed and compliant condition of the works.

(4) The particular bond amount is indicated as a condition of development approval.

(5) The Maintenance Bond is the greater value of either -

(a) 5 percent of the agreed development works obligations; or

(b) $2500.

(6) Where there is possibility for dispute over the Maintenance Bond amount a bill of quantities is required.

(7) A fully priced bill of quantities certified by a professional engineer of Queensland is submitted to the local government detailing the development works obligations that are to be transferred to the local government and are to be maintained by the applicant for a period specified in Part 11 - Planning Scheme Policy 9 - Infrastructure Works or other period advised by the local government.

(8) Maintenance Bonds are refundable after formal acceptance by the local government of the works Off-Maintenance and the transfer of the applicable works to the local government.

3.6.5 Special Consideration for a Place of Worship

(1) Works between the kerb and channel and the property alignment are not bonded if the place of worship can demonstrate the works have been designed, documented and included in the contract to construct the place of worship.

(2) A written statement provided by the place of worship indicating a commitment to construct these works before the place of worship is used.

(3) A bond is required for unconstructed work outside the 40 metre frontage before building approval.

3.6.6 Form of Security Bonds

(1) Security bonds submitted to the local government may be in the form of either -

(a) cash; or

(b) bank guarantees.

(2) Cash security bonds may be paid in the form of a cheque. However, in the case of the personal cheque, the security bond will not be processed and approved until the cheque amount is cleared.

(3) The local government will not accept any other form of security bonds other than those outlined above unless detailed in an infrastructure agreement or conditioned under a development permit.

(4) The local government requires security bonds to be submitted to the local government in the form of cash for the following development works -

(a) road cleaning;

(b) road opening;

(c) vegetation protection on a reconfiguration for amounts of $10 000 and less.

(5) The local government requires bank guarantees that -

(a) are irrevocable guarantees from a recognised trading bank;

(b) are open ended with no expiry date;

(c) are unconditional;

(d) detail the full and correct name of the customer/applicant;

(e) detail the full and correct real property description to identify the property for which the security bond is for;

(f) where applicable, detail the different types of bonds, the relevant amounts covered by the guarantee, and a statement describing the specific purpose(s) of the bond;

(g) give the development permit number and date;

(h) are for the total secured sum.

3.6.6.1 Deeds of Agreement

(1) For security bond amounts -

(a) between $250 000 and $500 000 - the local government requires a standard deed of agreement approved by the local government to be signed by the applicant, specifying the required security bond amounts for performance security, uncompleted works, significant vegetation protection and/or maintenance works. The standard deed of agreement is required to include a delegation that is to be signed by the Mayor and the Chief Executive Officer on behalf of the local government; or

(b) greater than $500 000 - the local government requires a security bond agreement, prepared by the local government's solicitors, to be signed by the applicant and any party holding a mortgage over the property, specifying the required security bond amounts for performance

security, uncompleted works, significant vegetation protection and/or maintenance works. The security bond agreement is required to include a delegation that is to be signed by the Mayor and the Chief Executive Officer on behalf of the local government. The cost of the preparation of the security bond agreement is to be borne by the applicant.

3.6.7 Calculation of Security Bond Amounts

(1) The calculation of a bond amount is subject to the particular development and associated works, and is required to meet the reasonable and relevant requirements of the *Integrated Planning Act 1997*.

(2) The bond amount is calculated by such factors as, but is not limited to -

(a) the category of bond required;

(b) the type and scale of development;

(c) the location of the development;

(d) the level of risk posed by the development works.

(3) Performance Bond amounts are subject to the type and scale of development works carried out on-site and in the public realm. This bond amount is calculated at the discretion of the local government and required as a condition of a development permit.

(4) Significant Vegetation Protection Bond amounts are generally based on the environmental, historic, social and/or cultural value, and are subject to the type of vegetation, the scale of vegetation protection, and the level of risk to the significant vegetation. This bond amount is calculated at the discretion of the local government and required as a condition of a development permit.

(5) Uncompleted Works Bond amounts are calculated from the certification from a Registered Professional Engineer of Queensland and agreed upon by the local government. For uncompleted development works, the Bill of Quantities is to detail the completed development works and the remaining uncompleted works. The bond amount will be the greater value of either -

(a) 120 percent of the estimated uncompleted works costs; or

(b) $5000.

(6) Maintenance Bond amounts are calculated at the discretion of the local government and required as a condition of a development permit. Where there is possibility for dispute over the Maintenance Bond amount a fully priced and certified bill of quantities is required. The bill of quantities details the development works and maintenance responsibilities that will be transferred to the local government at the end of the On-Maintenance period. The bond amount will be the greater value of either -

(a) 5 percent of the agreed development works obligations; or

(b) $2500.

3.6.8 Submission of Security Bonds

3.6.8.1 Lodgement of Performance, Significant Vegetation Protection and Maintenance Bonds

(1) Where the applicant is required as a condition of a development permit to lodge a bond for development works, a formal statement is submitted to the local government to place a security bond on the specified works. The bond amount is submitted before the commencement of development works.

(2) The formal submission consists of a written statement describing -

(a) the full and correct name of the applicant;

(b) the full and correct real property description of the development;

(c) the development permit number and date of issue;

(d) the type of security bond(s) being submitted;

(e) a written statement describing the specific purpose of the security bond.

3.6.8.2 Lodgement of Uncompleted Works Bonds

(1) It is the applicant's responsibility to lodge a formal request with the local government for the relevant bond amount for uncompleted works.

(2) The formal request for application for an Uncompleted Works Bond shall consist of -

(a) the full and correct name of the applicant;

(b) the full and correct real property description of the development;

(c) the development permit number and date of issue;

(d) a written submission outlining the reasons for the Uncompleted Works Bond;

(e) a bill of quantities, including a schedule of rates, a description of works completed, and those uncompleted.

3.6.9 Return of Security Bonds

(1) It is the applicant's responsibility to lodge a formal request with the local government for the return of a security bond at the completion of works or end of the On-Maintenance period, or the staged return of a Significant Vegetation Protection Bond, where applicable.

(2) This formal written request consists of the relevant development details -

(a) the full and correct name of the applicant;

(b) the full and correct real property description of the development;

(c) the development permit number and date of issue;

(d) the local government file reference for the development;

(e) the date the security bond was originally lodged with the local government;

(f) the form and amount of security bond originally lodged with the local government;

(g) a written statement outlining the reasons for the refund of the security bond;

(h) the name of the trading bank for bank guarantee security bond only;

(i) the local government receipt number for cash/cheque security bond only.

this page purposely
left blank

Chapter 7 - Water Supply and Sewerage Headworks Contribution

3.7.1 Purpose

(1) To outline the circumstances in which water supply and sewerage headworks contributions will be required as part of a development approval, and in particular to -

(a) define the components included in water supply and sewerage headworks calculations;

(b) outline the method for calculation of contributions.

3.7.2 Applicabilit y

(1) The local government will require a contribution in accordance with this policy towards the cost of construction and augmentation of the water supply and sewerage infrastructure as a condition of -

(a) a development permit pursuant to the *Integrated Planning Act 1997* in respect of a development application for -
(i) a material change of use that is assessable development; or
(ii) the reconfiguring of a lot that is assessable development; or

(b) a preliminary approval of a development application to which section 3.1.6 of the *Integrated Planning Act 1997* applies, where the development which is the subject of the preliminary approval is stated to be self-assessable development; or

(c) an approval pursuant to the *Local Government (Planning and Environment) Act 1990* of a prescribed application as defined in section 6.2 - Contributions towards water supply and sewerage works, of the *Local Government (Planning and Environment) Act 1990*.

3.7.3 Wastew ater

(1) The local government has prepared plans and estimates relating to the cost of existing wastewater works, which are revised annually in accordance with cost increases, as follows -

(a) the total cost of each water pollution control works is estimated separately;

(b) the cost of trunk mains pumping stations and rising mains is estimated for areas within each catchment;

(c) plans are prepared indicating the existing trunk main system and proposed extensions;

(d) the cost per equivalent tenement is calculated for each area indicated on Maps 1 to 4;

(e) conversion factors are determined to convert proposed land uses and zones into equivalent tenements to be used as the basis for calculating contributions;

(f) as the basis for calculating costs, the local government has determined that existing gravity sewers of 300mm diameter and above, and all permanent pumping stations and rising mains constitute the existing trunk main system; and that gravity sewers of 300mm diameter and above, and all permanent pumping stations external to the subject land and all rising mains connected will constitute the future trunk main system;

(g) for all land zoned for residential purposes prior to 1 September 1985 which does not require a further material change of use application, a charge in accordance with the trunk mains only component will apply;

(h) the local government will have regard to the provision of the Act in relation to intensification of existing uses.

(2) Contributions are made on the following basis -

(a) the local government will determine the point of connection to the system;

(b) the rate of contribution per equivalent tenement is in accordance with Table 1 - Conversion factors to equivalent tenements for various uses, and Table 2 - Conversion factors to equivalent tenements for zones, for each area indicated on Maps 1 to 4;

(c) the amount of contribution for a particular development is determined by multiplying the calculated number of equivalent tenements by the rate per equivalent tenement based on the conversion factor for the particular development included in the table of conversion factors;

(d) where gravity sewers of 300mm and above, pumping stations external to the premises and rising mains are constructed as part of the development. The costs of constructing the ultimate facilities are taken as wastewater contributions to the cost of works. No payment will be made by the local government where this amount exceeds the amount of wastewater contributions payable for the development;

(e) where a development application includes a use for which a conversion factor is not determined, a factor is determined based on the expected average discharge of sewage into the local government system in litres per day divided by 601;

(f) in the event that a point of connection is not available within 20 metres of the boundary of the premises, the local government is likely to decline to provide a wastewater service and/or refuse the development application or may enter into an agreement to provide the service subject to such terms as may be mutually agreed;

(g) nothing in this policy will preclude the local government from entering into an agreement for the provision of a wastewater service not complying with this policy where the local government considers that it is expedient to do so.

3.7.4 Water Supply

(1) The local government has prepared plans and estimates relating to the cost of existing and proposed water supply headworks and trunk mains, which are revised annually in accordance with cost increases, as follows -

(a) the total cost of each water supply scheme is estimated separately;

(b) a design population is assigned to a number of regions;

(c) the cost of existing and proposed works is divided into a number of categories, some of which are shared by the whole population of each water supply scheme and others attributed to specific regions;

(d) plans are prepared illustrating the region boundaries and the existing and proposed works included in the estimated costs;

(e) the cost per equivalent tenement is calculated for each area indicated on Map 5 - Water Augmentation Regions;

(f) conversion factors are determined to convert proposed land uses into equivalent tenements; which are used as the basis for contributions;

(g) as the basis for calculating costs, the local government determined that water mains of 300mm diameter and above, and all permanent pumping stations and storage reservoirs are considered part of the headworks system for the purpose of calculating contributions;

(h) for all land zoned for residential purposes prior to September 1985, which do not require a further material change of use application, a charge in accordance with the trunk main only component will apply;

(i) the local government will have regard to the provision of the Act in relation to intensification of existing uses.

(2) Contributions will be made on the following basis -

(a) the local government will determine the point of connection to the system;

(b) the rate of contribution per equivalent tenement is in accordance with fees and charges updated annually for each area indicated on Map 5 - Water Augmentation Regions. The respective contribution rates for water supply and sewerage are set out in the local government's current Schedule of Fees and Charges. Headworks contribution rates are reviewed on a regular basis through the local government's budget process;

(c) in the event that a point of connection is not available within 20 metres of the boundary of the premises, the local government is likely to decline to provide a water service and/or refuse the development application, or may enter into an agreement to provide the service subject to such terms as may be mutually agreed;

(d) nothing in this policy will preclude the local government from entering into an agreement for the provision of a water supply service not complying with this policy where the local government considers that it is expedient to do so;

(e) where a development application includes a use for which a conversion factor is not determined, a factor is determined based on the expected average consumption of water from the local government system in litres per day divided by 930;

(f) the amount of contribution for a particular development is determined by multiplying the calculated number of equivalent tenements by the rate per equivalent tenement based on the conversion factor for the particular development included in the table of conversion factors;

(g) where water mains of 300mm and above are constructed as part of the development, the cost of constructing the ultimate facilities will be taken as water supply contributions to the cost of works. No payment will be made by the local government where this amount exceeds the amount of water supply contributions payable for the development.

3.7.5 Concessions for a Place of Worship

The local government will not require contributions to water supply and sewerage augmentation for a place of worship but will require contributions for certain ancillary activities such as childcare facilities and halls.

Table 1 - Conversion factors to equivalent tenements for various uses

Types of Uses	Water	Wastewater
Aged Persons and Special Needs Housing (1) (1 bedroom) (2) (2 bedroom) (3) (3 bedroom) (4) Hostel (per person) (5) Nursing Home (per bed)	 0.33 0.57 0.76 0.28 0.31	 0.33 0.50 0.63 0.33 0.35
Apartment Building (per unit)	0.53	0.68
Bulky Goods Showroom (per 100m^2 floor area)	0.14	0.20
Child Care Centre (per child)	0.04	0.03
Commercial Office (per 100m^2 floor area)	0.13	0.17
Community Facility - Welfare Premises (per lot)	0.64	0.40
Display and Sale Activity (per 100m^2 floor area)	0.48	0.20
Dual Occupancy (per unit)	0.53	0.68
Dwelling House (per lot)	1.00	1.00
Education Facility (1) Primary School (per pupil) (2) Secondary School (per pupil)	 0.035 0.05	 0.03 0.05
Garden Centre (per 100m^2 site area)	0.48	0.20
General Industry - Concrete Batching Plant (per 100m^2 site area)	0.28	0.06
General Industry (per 100m^2 floor area)	0.10	0.07
Health Care Centre (per 100m^2 site area)	0.21	0.30
Heavy Industry (per 100m^2 floor area)	4.5	6.18
Hospital (per bed)	0.93	0.93
Hotel (per 100m^2 floor area)	0.80	1.15
Indoor Recreation Facility (1) With shower facilities (per 100m^2 floor area) (2) No shower facilities (per 100m^2 floor area)	 0.45 0.06	 0.60 0.07
Marine Services (per 100m^2 floor area)	0.10	0.07
Mobile Home Park (per site)	0.34	0.50
Multiple Dwelling (per unit)	0.53	0.68
Outdoor Recreation Facility (per 100m^2 floor area)	1.06	1.30
Refreshment Establishment (per 100m^2 floor area)	2.05	2.87
Retail Warehouse (per 100m^2 floor area)	0.14	0.20
Service Station (per 100m^2 floor area)	1.36	0.40
Shop (1) Over 6000m^2 floor area (per 100m^2 floor area) (2) 200m^2 - 6000m^2 floor area (per 100m^2 floor area) (3) Under 200m^2 (per 100m^2 floor area)	 0.42 0.34 0.28	 0.57 0.40 0.40
Small Lot House (per lot)	1.00	1.00
Tourist Accommodation - Caravan Park (per site)	0.34	0.50
Tourist Accommodation - Motel (bedroom)	0.23	0.32
Vehicle Depot (1) cars (per 100m^2 floor area) (2) trucks (per 100m^2 floor area)	 0.06 0.80	 0.03 0.60
Vehicle Repair Premises (per 100m^2 floor area)	0.11	0.12
Veterinary Surgery (per lot)	0.48	0.40
Warehouse - Freight Depot (per 100m^2 floor area)	0.39	0.40
Warehouse (per 100m^2 floor area)	0.04	0.01

Note -

The conversion factor to equivalent tenement for other uses that are not listed in Table 1 will be determined by the local government.

Table 2 - Conversion factors to equivalent tenements for zones

Zone	Water	Wastewater
Centre (Major, District, Neighbourhood, Local, SMBI, Pt Lookout)	As determined by the local government	
Commercial Industry (per gross hectare)	12.50	12.50
General Industry (per gross hectare)	12.50	12.50
Medium Density Residential (per gross hectare)	30.00	30.00
Park Residential (per lot - 6000m^2 average)	1.50	0.00
Low Density Residential (per lot - 2000m^2 average)	1.25	1.25
Rural Non-Urban (per lot)	1.50	0.00
Urban Residential (per gross hectare)	10.00	10.00

Map 1 - Capalaba Sewerage Area

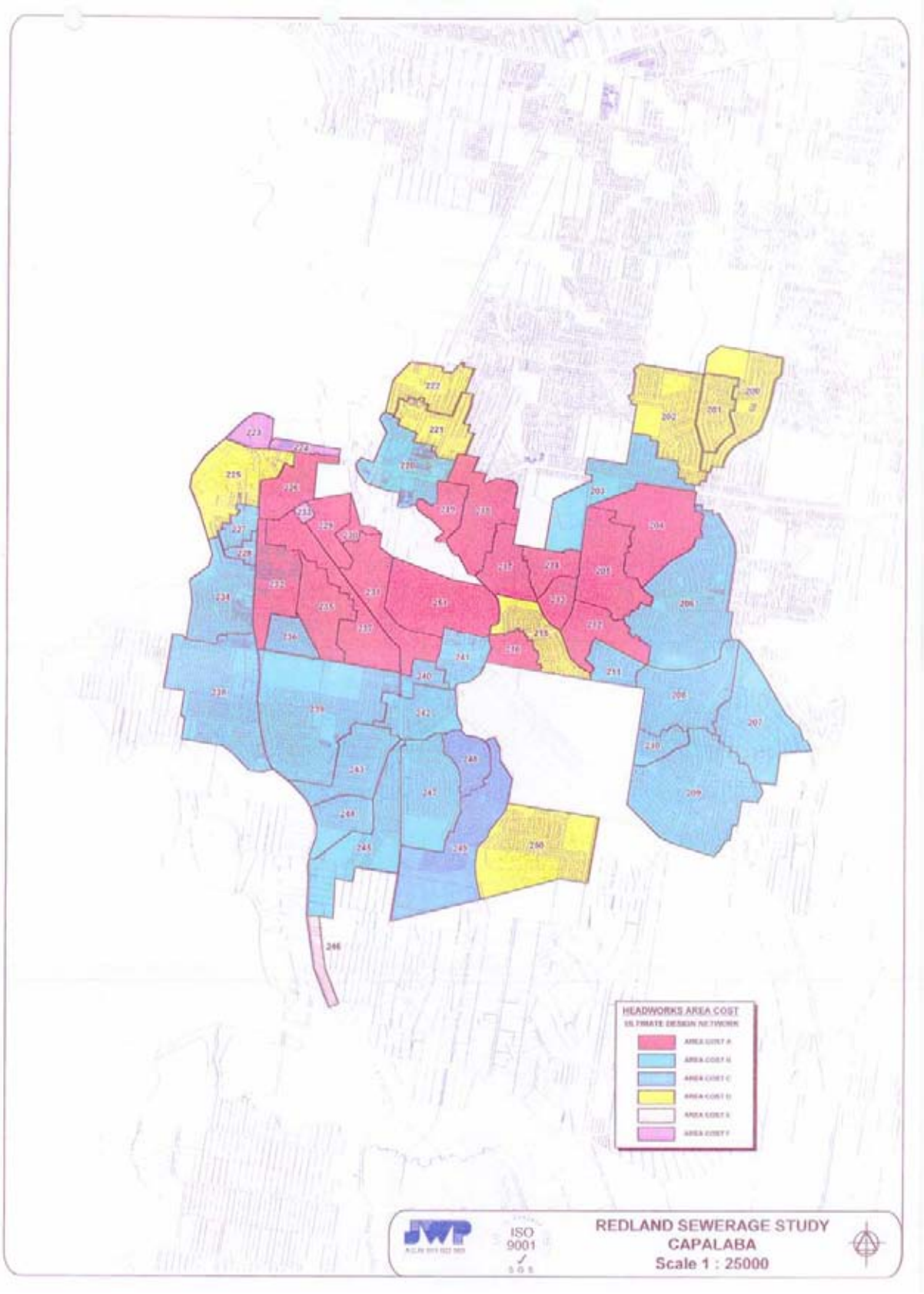

Map 2 - Cleveland Sewerage Area

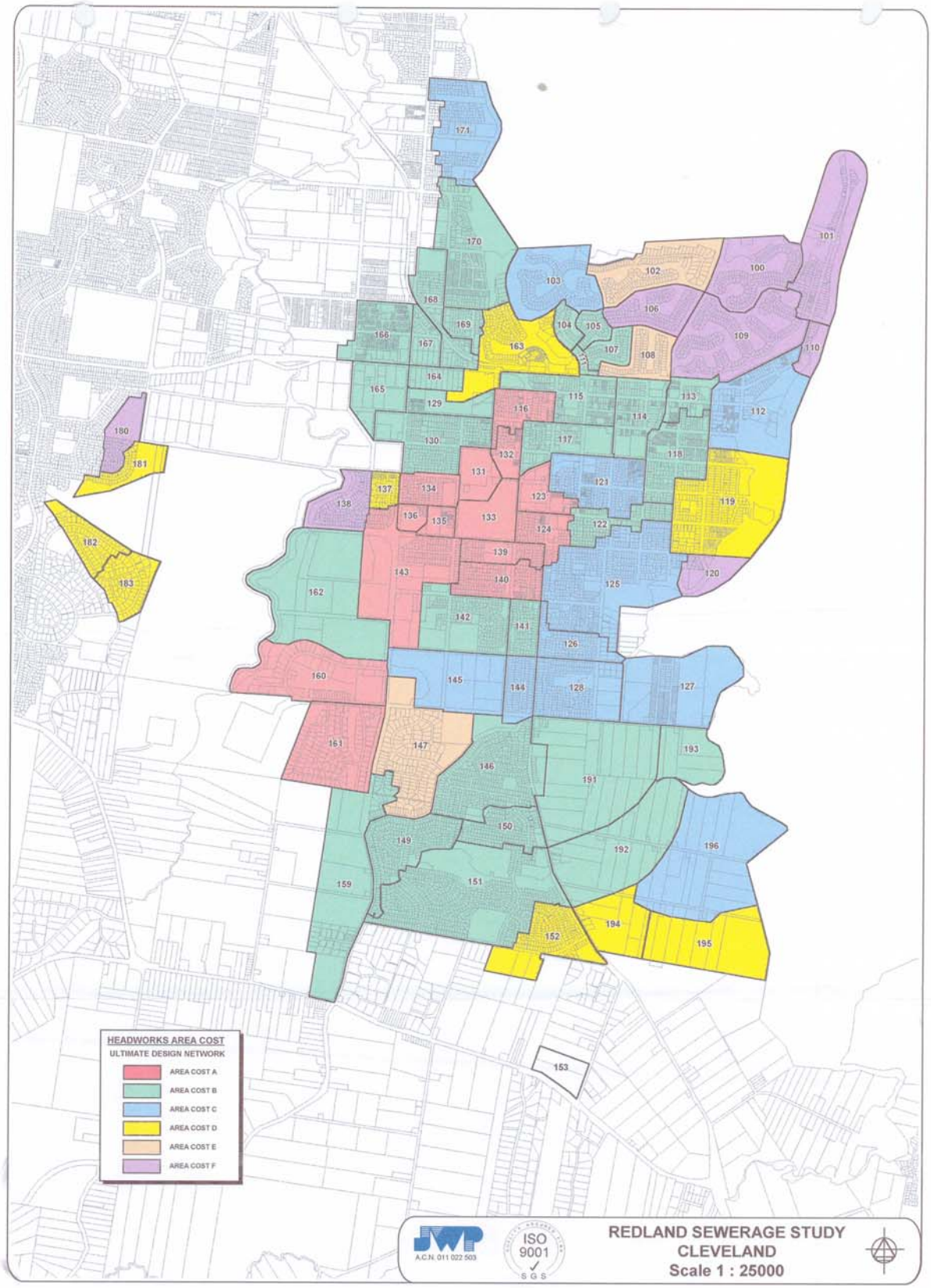

Map 3 - Thorneside Sewerage Area

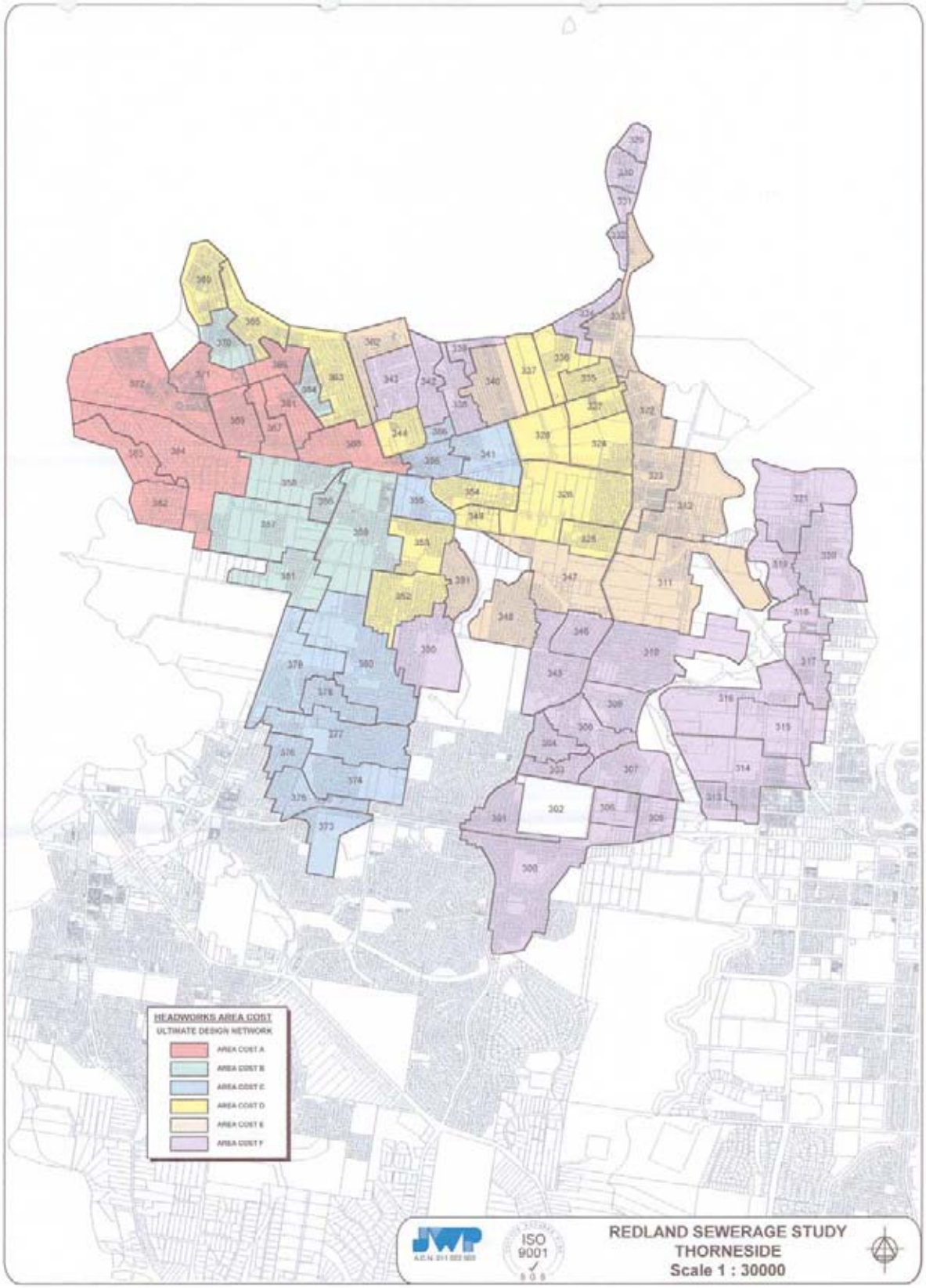

Map 4 - Victoria Point Sewerage Area

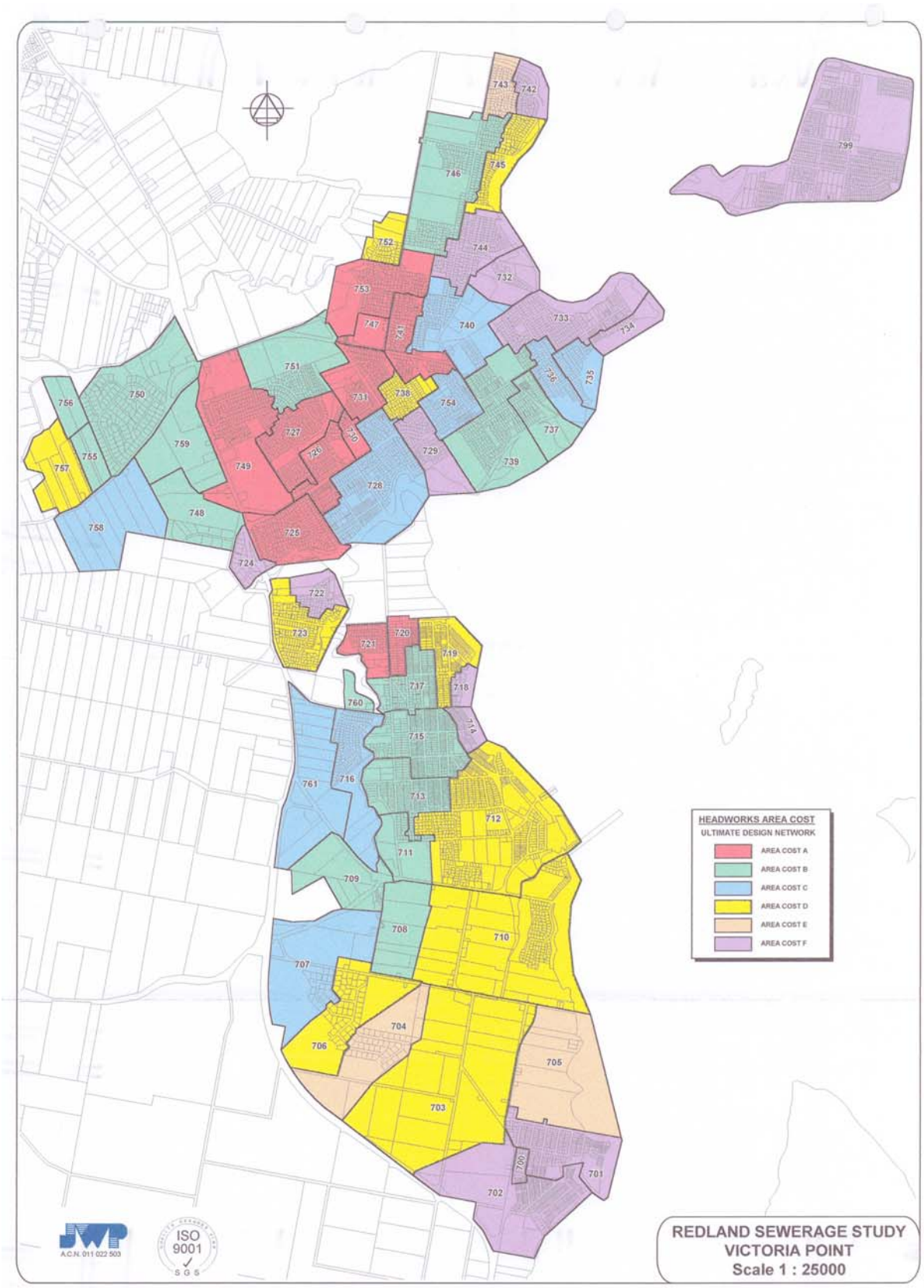

Map 5 - Water Augmentation Regions

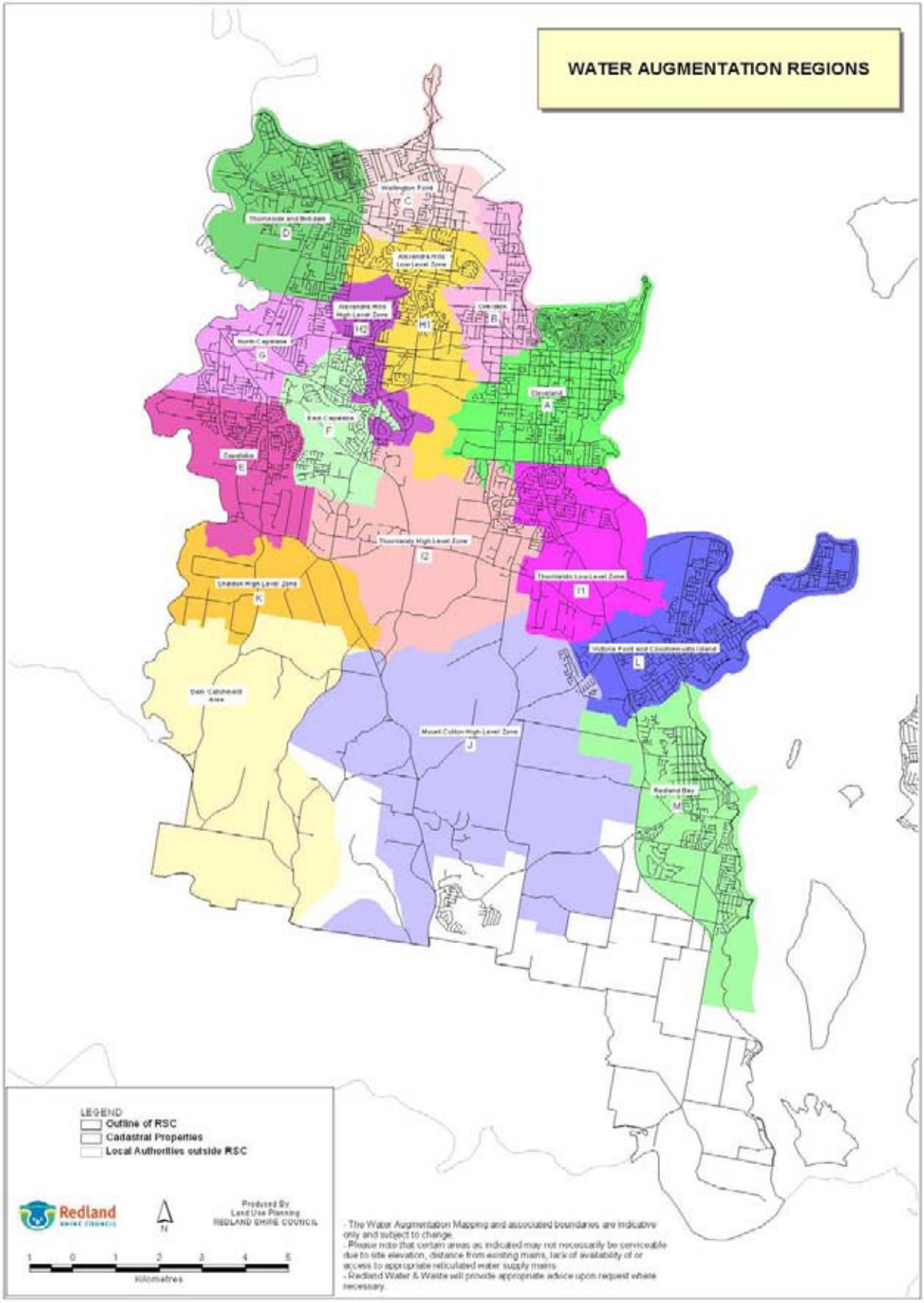

Planning Scheme Policy 4 - Ecological Impacts [1]

Contents

4.1 Introduc tion
4.2 Purpose
4.3 Applicabilit y
4.4 Interpr etation
4.5 Formulating a Development Proposal
4.6 Approach to Ecological Assessment Reporting
4.7 Ecological Assessment Report
4.8 Habitat Protection Overlay
4.9 Application of the Overlay
4.10 Ecological Enhancement
4.11 Revegetation with Appropriate Local Native Plants
4.12 Creating or Improving Movement Pathways for Native Animals
4.13 Improve Ecological Conditions or Processes in Degraded and Threatened Areas
4.14 Recovery of Significant Species
4.15 Bibliography
4.16 Glossary
Appendix 1 Fauna Survey Needs
Appendix 2 Fauna and Flora List
Appendix 3 Redland City Environmental Inventory Stage 4
Appendix 4 Ecological Assessment Certification Report

4.1 Introduction

Redland City covers large areas of natural coastline, the coastal islands of Moreton Bay, remnant bushland, and developed urban and rural areas. It is well recognised as one of the most biologically diverse areas of Queensland with an abundance of sub-tropical plants and animals. The wildlife habitats are diverse - ranging from tall eucalypt forest, to fresh and saltwater wetlands and unique island ecosystems. Redland City is part of a unique area on the eastern seaboard having tropical northern species and temperate southern species overlapping at the limit of their respective distributions.

This biodiversity is valued by residents. However, Redland City is part of Australia's fastest growing metropolitan region. It is no longer a rural Shire with some townships. Rather, it is now an expanding urban area in a bushland and coastal setting on the edge of the greater Brisbane metropolis. This growth is placing significant pressure on the ecosystems and the wildlife of the Redlands. In the Redlands, 19 plant species and 46 animal species are listed as vulnerable, rare or endangered. The threats to the survival of these animal and plant species include land clearing, habitat alteration, introduced pest species, and human activities.

[1] Redland City Council acknowledges the contribution of Brisbane City Council's 'Ecological Assessment Guidelines' on which parts of this policy are based. This policy recognises the need to keep a consistent approach to planning requirements among Councils in South East Queensland.

The challenge is to protect, manage, restore and enhance this biodiversity while accommodating managed urban growth.

Redland City Council has responded to this challenge with -

- policies such as the Local Law 6 - Protection of Vegetation, the Koala Conservation and Management Policy and Strategy, the Bushland Habitat and Corridor Plan, the Redland City Environmental Inventory, the Vegetation Enhancement Strategy;
- programs such as the Land for Wildlife, the Rural Support Program, the Bushcare Program, Voluntary Conservation Agreements and Your Back Yard Garden.

The Redland City community is committed to -

- the retention of native vegetation;
- the recovery of threatened plant and animal species;
- the prevention of species degradation; and
- the maintenance and enhancement of ecological processes.

The Redlands Planning Scheme also responds to this challenge. Through its Zones and Overlays, the planning scheme identifies areas where plants, animals, and habitats are such that detailed and comprehensive analysis of these ecological values will be required to assist in the assessment of development proposals.

4.2 Purpose

(1) The purpose of this policy is to -

(a) set out the requirements for the preparation and submission of technical reports, including an Ecological Assessment Report, associated with development applications -

(i) affected by the Habitat Protection Overlay;

(ii) where ecological or environmental values may be -

a. impacted adversely as a result of proposed development; or

b. strategically enhanced as a result of proposed development.

(b) provide information relating to management of ecological impacts of development under the planning scheme.

4.3 Applicability

(1) The policy applies to -

(a) development on land affected by -

(i) the Habitat Protection Overlay;

(ii) the Waterways, Wetlands and Moreton Bay Overlay;

(iii) the SMBI Residential Zone sub-area SR1;

(iv) the Flood Prone, Storm Tide and Drainage Constrained Land Overlay;

(b) development that is -

(i) likely to result in adverse impact on ecological values;

(ii) located in an area with significant ecological values;

(c) development that is impact assessable and for which ecological or environmental values are to be identified and managed.

(2) Where a specific information request is made by the local government seeking more detailed information than that in this Policy, then the requirement for more detailed information takes precedence.

4.4 Interpretation

(1) Part 9 - Schedule 3 - Dictionary defines terms used in the policy.

(2) Section 4.6 - Glossary also defines terms used in the policy.

4.5 Formulating a Development Proposal

(1) Undertake ecological assessment before determining potential development scenarios.

(2) A detailed and comprehensive site analysis is the foundation of any good design and is carried out as the first step.

(3) An ecological assessment report is required to identify the ecological values present and how the proposed development is likely to impact upon these values.

(4) The recommendations of an ecological assessment report are required to ensure that development siting and design avoids, mitigates or minimises adverse impacts, or identifies how the development will restore and enhance ecological values.

(5) It is strongly recommended that the applicant arrange a pre-lodgement meeting to determine if an ecological assessment report is required, the level of ecological assessment required, and discuss the scope of the ecological assessment prior to its commencement.

(6) The local government may be able to contribute or recommend databases or schedules of relevant environmental data. This will help to ensure a more streamlined process once an application is lodged.

(7) An ecological assessment report is a site survey and analysis with particular emphasis on the vegetation, flora, fauna, habitat, waterways and ecology.

(8) Flora assessment aims to provide accurate assessment and documentation of existing vegetation, introduced and natives, at the level of community and increasingly individual plants, such as koala food trees.

(9) Fauna assessment extends the approach to include the wildlife using the site and the habitat values of the area - terrestrial and aquatic, including migratory species.

(10) Each development site has the potential to contribute to the habitat for fauna and flora, and wildlife movement opportunities, available in the landscape.

4.6 Approach to Ecological Assessment Reporting

4.6.1 Level of Ecological Assessment

(1) The policy recognises two levels of ecological assessment -

(a) Level One or limited ecological assessment;

(b) Level Two or full ecological assessment.

(2) In general, a Level One ecological assessment is required for code assessable applications for small-scale development or operational works with limited capacity to adversely impact on ecological values or processes at the site or in adjoining areas. This may include, for example, code assessable development in Koala Habitat of the Habitat Protection Overlay, or development that is for single dwelling house, dwelling addition, domestic outbuilding or private swimming pool.

(3) In general, a Level Two ecological assessment is required for code assessable or impact assessable applications for large-scale development with potential for significant adverse impacts on ecological values or processes, or where development is located in areas with significant or sensitive ecological values. This may include, for example, development that is for extractive industry, general industry, environmentally relevant activity, or reconfiguration.

(4) Where there is any doubt as to the applicable level of ecological assessment -

(a) a Level Two ecological assessment is considered as the default requirement; or

(b) the local government will determine the level of ecological assessment at the pre-lodgement or information request stage.

4.6.2 Scope of the Ecological Assessment Report

(1) In each level of ecological assessment it is recognised that the level of detail in investigation and contained in the report may vary, relative to the -

(a) scale and likely impact of the development proposal;

(b) ecological values present;

(c) sensitivity of these values to development.

(2) All ecological assessment reports should contain enough information to adequately identify, describe and assess -

(a) the significance of the ecological values and processes at the site and adjoining area;

(b) the threatening processes evident on site;

(c) the ecological links with adjacent land, at the local or regional scale depending on the scale of the development proposal;

(d) the potential impacts of proposed development on ecological values identified;

(e) the measures proposed in the development to enhance, such as restore or revegetate, identified ecological values;

(f) the measures proposed in the development to avoid, minimise, mitigate or manage the identified impacts.

(3) The minimum requirement for a Level One ecological assessment is the completion by a suitably qualified person of a certification similar to that included in Appendix 4.

(4) If the local government requests additional information that is not contained in this policy, the information request takes precedence.

4.6.3 Report Components in Brief

(1) The minimum requirement for a Level One ecological assessment is the completion by a suitably qualified person of a certification covering the matters outlined above using the format provided in Appendix 4.

(2) Otherwise, all Level One and Level Two ecological assessment reports should include the following sections -

(a) introduction to the background and objectives of the report;

(b) summary description of the development proposal;

(c) outline of the legislation, strategy and policy context;

(d) describe existing ecological values and site conditions, being the site analysis;

(e) detailed description of the site analysis and field survey methodologies used including the scope and duration of surveys, justification of methods and assessment of survey limitations;

(f) identify and assess potential environmental and ecological impacts of the development proposal;

(g) identify and assess potential avoidance, mitigation and management measures;

(h) identify and assess opportunities for ecological enhancement;

(i) statements of environmental commitments avoidance, management and control measures.

4.6.4 Experience and Qualifications

(1) Persons are suitably qualified or experienced to undertake surveys for, or sign-off (certify) the Level One or Level Two ecological assessment report, or complete the Level One certification contained in Appendix 4.

(2) A suitably qualified person is one who has attained a relevant tertiary qualification(s) in ecology, biology, botany, conservation biology, environmental planning or environmental engineering or related disciplines and has a minimum of five years of relevant work experience in the carrying out of survey, assessment and reporting of ecological features and processes in South-East Queensland, and preferably Redland City.

(3) A suitably experienced person is one who may have no relevant tertiary qualification(s) but has a minimum of ten years of relevant work experience in the carrying out of survey, assessment and reporting of ecological features and processes in South-East Queensland, and preferably Redland City.

(4) An outline of qualifications and experience for each person substantially contributing to survey or ecological assessment report is provided as an attachment to the ecological assessment report.

(5) Persons may require a licence, approval or permit from Queensland National Parks and Wildlife Service to conduct their research, collect specimens, and the like. A copy of any licence or permit is included as an attachment to the ecological assessment report.

4.7 Ecological Assessment Report

4.7.1 Description of the Development Proposal

(1) Describe the -

(a) location and extent of the study area and includes the area, external to the subject site, that will be affected by the proposal;

(b) general physical properties of the site, including geology, soils, hydrology and vegetation cover;

(c) existing use of the study area, and previous uses if known, including details of buildings, works, ownership, previous activities and use of potential contaminants, disposal of contaminants, construction of dams, levees, placement of fill, and the like;

(d) development proposal that has triggered the ecological assessment report, including the nature of the development, such as residential, commercial, industrial, and the like;

(e) location in relation to the existing or surrounding development, including any proposed surrounding development that is on the public record;

(f) planning scheme codes, overlays and policies that apply to the site;

(2) Provide the name and qualifications of the person undertaking the ecological study and the person(s) involved in the study.

4.7.2 Planning, Policy and Legislative Context

(1) Outline the Commonwealth, State and local government planning, policy and legislative context relevant or applicable to the site and development proposal.

(2) Explain how the report will address the requirements of relevant legislation, policies and regulations and which particular sections or provisions are addressed.

(3) Identify where additional application or assessment is required beyond the local government planning scheme.

Note -

This step helps to ensure that all relevant regulations are identified and addressed. It avoids overlap, duplication or conflicting requests for the preparation and assessment of technical documentation. It also ensures that applicants, consultants and assessment officers, whether local or State or Federal government, are aware of the overall process and their role within the process.

4.7.3 Ecological Site Assessment and Analysis

Note -

The requirements for this section are described in more detail in following sections of this policy.

(1) Provide an accurate and clear identification of ecological features and processes of the proposed development site and its immediate area including -

(a) vegetation, native plants (flora) and native animals (fauna) by -

(i) species listed in Appendix 2, being recognised environmental values in the Redland City;

(ii) vegetation communities and species or fauna species;

(iii) edge effects and other disturbances;

(iv) spatial and temporal ecological processes, including seasonal use by fauna;

(v) habitat significance;

(b) ecological corridors and links;

(c) ecological features and processes;

(d) opportunities for enhancement of the above.

(2) Provide maps and diagrams to present the findings of the site surveys.

(3) All maps are prepared to scale and where possible at comparable scales (for overlay).

(4) Reporting of the assessment and survey results including conclusions and recommendations that include -

(a) a main purpose of the flora and fauna surveys is to enable scientifically based conclusions and recommendations to influence the design, construction and operation of development proposals;

(b) conclusions and recommendations that are easy to understand and tailored to a potentially wide audience who may not have a science background, such as -

(i) developer;

(ii) property owner;

(iii) interested stakeholders;

(iv) general public;

(v) local Councillors;

(vi) local community groups;

(vii) environmental organisations;

(viii) other consultants involved in the application and assessment process.

4.7.4 Ecological Site Assessment Methodology - Vegetation Communities and Flora Assessment

(1) Redland City was mapped at the vegetation community level in June 2001 in accordance with the vegetation classification systems used by the Queensland Herbarium and using an early version of the *Common Nature Conservation Classification System.*

(2) The native plant communities identified in *Remnant and Non-Remnant Vegetation of Redland Shire 2001* form the basis for the Conservation Management Areas identified in the *Redland Shire Environmental Inventory*.

(3) It is essential for timely assessment of vegetation mapping undertaken in support of the ecological assessment report that the mapping and methodology of *Remnant and Non-Remnant Vegetation of Redland Shire 2001* and *Redland Shire Environmental Inventory* is used. Both are available from Council electronically.

(4) Assessment should include and address the mapping and approach of, and generally be consistent with -

(a) the *Common Nature Conservation Classification System* as used by the Queensland Herbarium;

(b) regional level assessments conducted by the Environmental Protection Agency including -

(i) the South East Queensland Biodiversity Planning Assessment of the SEQ Regional Nature Conservation Strategy;

(ii) the Regional Ecosystem mapping;

(iii) South East Queensland Regional Coastal Management Plan.

(5) For flora assessment the following is required -

(a) describe and accurately map existing terrestrial and aquatic vegetation located within the application site and adjacent to it including -

(i) floristics - including age and botanical and common names;

(ii) structural formation - including identification of species composition by stratum or structural class from the upper canopy to the ground layer and using measures of canopy spread and percentage of openness, foliage cover;

(iii) condition or integrity of the vegetation;

(iv) level of existing disturbance - including the location and description of -

a. areas regenerating and their integrity and likelihood of survival;

b. weed growth[2];

c. edge effects and ecotones;

(b) provide a survey accurate location plot of -

(i) koala habitat trees[3] (or koala food trees) in Koala Habitat areas[4]; or

(ii) tree species with a trunk diameter of 100mm or more at breast height, at 1500mm above ground level;

(c) location and extent of any vegetation protected under Local Law 6 - Protection of Vegetation and the *Vegetation Management Act 1999*;

(d) describe the habitat significance of flora at the site within the local and regional context including , but not limited to, the following criteria -

(i) quality (naturalness);

(ii) diversity;

(iii) representativeness;

(iv) uniqueness;

(v) conservation status;

(vi) viability (connectivity);

(e) provide a survey accurate map of vegetation communities and significant flora, where possible use a GPS unit using Northing and Easting coordinates showing -

(i) contours at one metre intervals;

(ii) location of major and minor waterway corridors, including seasonal watercourses, dams and wetlands, whether existing, natural or constructed;

(iii) existing buildings and infrastructure such as roads and service lines;

(iv) existing easements and covenants;

---

[2] Refer to Part 9 - Schedule 12 – Weed Species List.

[3] Koala habitat trees are defined in the Glossary, which uses the same definition as provided in the *SEQ Regional Plan Interim Guideline: Koalas and Development 2005* or visit the EPA website at www.epa.qld.gov.au.

[4] Refer to Part 5 – Overlays, Division 7 - Habitat Protection Overlay Code.

(v) proposed constructed features or development envelopes, service corridors, access corridors;

(vi) proposed habitat enhancement corridors.

4.7.5 Ecological Site Assessment Methodology - Fauna Assessment

(1) The Redland City is known to support an extensive range of native fauna species, many of which are currently listed as threatened, vulnerable and rare in the *Nature Conservation Act 1992* and *Regulation*.

(2) It is essential for timely assessment of habitat and fauna mapping be undertaken in support of the ecological assessment report consistent with the mapping and methodology of *Remnant and Non-Remnant Vegetation of Redland Shire 2001* and *Redland Shire Environmental Inventory*. Both are available from Council electronically.

Note -

Detailed assessments techniques such as trapping, baiting, spotlighting, and the like, will require permits from Queensland's Parks and Wildlife Services. Additional information on acceptable fauna survey techniques and periods in the Redland City are included in Appendix 1.

(3) Identify all terrestrial and aquatic fauna species permanently or periodically observed as present or likely to be present within the site and adjoining areas throughout the year.

(4) This will require comprehensive survey of all vegetation communities, ecotones and other ecological features present on the site and adjacent areas, in addition to searches and comprehensive presentation of detail found in available literature and fauna databases.

(5) Identify and describe presence of old growth hollows, nests, fauna scats or markings.

(6) Refer to Appendix 1 for methodology of surveying vertebrate fauna.

(7) There is not preferred methodology for surveying invertebrate fauna.

(8) Identify any evidence of edge effects and disturbances, the degree of effect or disturbance and their likely causes.

(9) Identify spatial and temporal ecological processes operating at or adjacent to the site.

(10) Describe the fauna habitat significance at the site within the local and regional context including, but not limited to the following criteria -

(a) quality (naturalness);

(b) uniqueness;

(c) diversity;

(d) conservation status;

(e) representativeness;

(f) viability/connectivity.

(11) An acceptable approach to describing habitat significance is to use the *Common Nature Conservation Classification System* (CNCCS) developed by Chenoweth Environmental Planning and Landscape Architecture Pty Ltd for the Western Regional Organisation of Councils (WESROC) and endorsed by the South East Queensland Regional Organisation of Councils (SEQROC)[5].

(12) Assessment should also include and address the mapping and approach of, and generally be consistent with -

(a) relevant regional level assessments conducted by the Environmental Protection Agency including -

(i) the South East Queensland Biodiversity Planning Assessment of the *SEQ Regional Nature Conservation Strategy*;

[5] Further information on the CNCCS can be obtained from the WESROC website (http://www.wesroc.qld.gov.au/Projects.htm).

(ii) South East Queensland Regional Coastal Management Plan;

(b) relevant Commonwealth, State and regional conservation and recovery plans for rare, threatened, vulnerable and endangered species or species groups. Refer to bibliography.

(13) Provide a survey accurate map depicting key community and species level information arising from the assessment and survey that -

(a) shows the location of significant or critical habitat features including for example -

(i) hollow and nest bearing trees, nest locations;

(ii) roost, nest and den trees;

(iii) location and identification of scratch marks, scats and other traces;

(iv) ground diggings;

(v) fallen logs and rock outcrops;

(vi) fallen fruits and seeds;

(vii) sightings, traps, baiting and other fauna monitoring locations and techniques;

(b) where applicable include the location of zone and overlay boundaries;

(c) provide integration with vegetation mapping.

(14) Provide detailed species lists that ensure a distinction is made between *observed fauna* lists and *likely to occur on site* lists.

(15) Where possible link or reference lists to locality maps.

(16) Fully describe fauna assessment methodology and on-site fauna survey techniques including -

(a) specific objective of the fauna survey;

(b) criteria uses to design the sampling and survey system;

(c) justification of the techniques employed for each fauna group surveyed;

(d) time(s) and date(s) on which the survey was undertaken;

(e) commencement and duration times for each sampling and survey period;

(f) details of all technical equipment and how it was used in the survey process;

(g) size, type, number and location of traps, baits or other survey recording techniques;

(h) general comments on the limitations or problems associated with the fauna survey methodology including lack of seasonal variations in fauna usage, if relevant;

(17) This information is described in sufficient detail to enable an independent consultant to replicate the survey and achieve comparable results.

4.7.6 Ecological Site Assessment Methodology - Wetlands, Water Bodies and Hydrological Patterns - Including Dams

(1) The creeks and streams in Redland City convey flood waters to Moreton Bay, provide water quality improvement, provide movement corridors for wildlife and often are significant habitat areas. Protection, management and rehabilitation of waterways provide multiple benefits to the environment, landscape aesthetics and property protection.

(2) Wetlands, water bodies and general hydrological patterns are intrinsically linked to ecological areas and functions and from part of an ecological assessment report.

(3) Alterations to hydrology through the development process can significantly impact on the ecological functions of applications sites in positive and negative ways.

(4) Locate, map and describe at the site and adjacent to the site -

(a) major and minor waterways;

(b) surface water bodies, such as wetlands, dams, lakes or the like;

(c) hydrological patterns;

(d) riparian and in-stream vegetation communities;

(e) extent, profile and general bed composition.

4.7.7 Ecological Site Assessment Methodology - Ecological Corridors and Functions

(1) Ecological corridors are a well established concept in planning.

(2) It is also well established that protecting and rehabilitating corridor links between habitat areas helps maintain biodiversity and the integrity of ecosystems.

(3) Fragmentation and isolation of habitat reduces the diversity and viability of flora and fauna populations. The effects of geographical isolation may not be immediately visible, but often lead to local extinctions of vulnerable species over time.

(4) Corridors of suitable structure, composition and extent enable wildlife movement between habitat areas, allowing genetic interchange between populations from different areas and opportunities for escape and recolonisation following environmental disturbances such as drought and fires. They provide a range of habitats and refuges to allow such genetic exchange.

(5) Ecological corridors also aid the dispersal, pollination and recolonisation of plant species.

(6) Ecological functions are identified at a broad landscape level in association with Conservation Management Areas identified in the Redland City Environmental Inventory.

(7) Individual vegetation polygons or units are allocated functional descriptions such as patch, mosaic, corridor, link, and core.

(8) In addition, other ecological functions are ascribed to certain areas and habitats at a level of resolution below that indicated in the Environmental Inventory. For example, the following are also recognised -

(a) high tide and critical high tide feeding and roosting sites for wading birds;

(b) hilltops used by hill topping butterflies;

(c) koala and wildlife road crossing locations;

(d) island sanctuaries protected from predation along the foreshore and in Moreton Bay;

(e) stands of older growth vegetation with tree hollows that provide sites for breeding, roosting and shelter.

(9) At a broad level existing and potential ecological corridor locations and the ecological function of habitat areas have been mapped in the Redland City Environmental Inventory and reflected in the Bushland Habitat Overlay Map.

(10) Locate and describe the configuration and composition of ecological functions over the application site and adjoining lands. Key descriptive elements should include -

(a) type, extent and description of vegetation;

(b) identification of fauna species observed and likely to utilise the ecological function / corridor;

(c) existing levels of disturbance and threats to the ecological function such as weeds, contextual clearing, and the like;

(d) areas of potential enhancement that are suitable through, restoration, regeneration, rehabilitation;

(e) critical support areas external to the application site.

(11) Prepare a contextual map locating ecological features within and external to the application site and how these areas integrate and connect.

(12) Where applicable plans and drawings include the location of zone and overlay boundaries and provide some integration with vegetation mapping.

4.7.8 Describe Field Survey Methodology

(1) Provide a full description of the field survey methodology used and assumptions made, demonstrating -

(a) adequate coverage of all major habitat types or vegetation communities, including ecotones, and exotic and pest species;

(b) use of survey techniques suited to targeting flora or fauna life histories;

(c) repeatability of survey techniques;

(d) adequate consideration of seasonal variations, timing, duration and climatic conditions.

(2) Provide any past records of the site and adjoining lands being used by native fauna. Records can include research reports, local knowledge and databases, Nature Search (Wildnet), Queensland Museum and Queensland Herbarium or the like.

(3) Provide appropriate photographs, figures and maps that will enable the timely identification and location of important features on the ground, and replication of the survey effort.

(4) Provide details of all background investigations undertaken in preparing the report, including literature reviewed, recognised specialists, authorities and local naturalists consulted or referenced.

(5) Provide information on the assessment and survey methodologies, principles and techniques used in the survey.

(6) Provide data and information collected during site inspections and other research, such as the lists of native animals and native plants found on the site, and their conservation status.

(7) Where no significant fauna observations were made at a particular date and time, the absence of observations should be explained in terms of habitat quality and seasonal or diurnal variation.

4.7.9 Identify and Assess Potential Ecological Impact

(1) Potential impacts on the identified ecological resources of the site and surrounding lands are determined prior to development and significantly influence development design and construction activities.

(2) Development activities can and often do result in impacts on ecological values that may be -

(a) negative, such as -

(i) loss of habitat and species through clearing, earthworks and encroachment;

(ii) changes in air quality, noise, vibration, water quality, hydrological patterns, light emissions, dust and silt deposition;

(iii) changes in the location and pattern of human activities and the associated disturbances;

(iv) fragmentation of habitat, severance of movement corridors and the creation of barriers or other obstacles affecting the movement of native animals;

(v) changes in soil structure, nutrient levels, erosion, siltation and pollutant loads;

(vi) changes in the numbers and types of wildlife predators and prey;

(vii) introduction of non-native and pest animal species including stock and feral or domestic animals;

(viii) introduction of weed species;

(b) positive, such as -

(i) dedication of lands to permanent conservation management;

(ii) creation of managed and steady state habitat areas through restoration and replanting of areas set aside for conservation or open space;

(iii) control and eradication of pest animal species;

(iv) control and eradication of weed species;

(3) Identify and describe the potential spatial and temporal (short and long-term) impacts of the development on species and vegetation communities, including consideration of both the construction and operational phases of the development.

(a) identify and describe the development and activities that may result in changes on the application site or surrounding natural environment (e.g. clearing of vegetation, filling, culvert

installation and traffic in connection with a new subdivision road to cross an existing natural drainage line), and for each describe -

(i) the physical changes to the natural environment that result;

(ii) the likely impacts of these physical changes on identified ecological values;

(iii) the significance of these impacts;

(iv) the ecological consequences for habitats and species affected by these impacts (e.g. changes in plant species diversity, opportunities for weeds and reduction in riparian based fauna habitats from general area);

(b) looking across the development and activities described above, comment on the combined impact on identified ecological processes and ecological values -

(i) for the site as a whole;

(ii) for the whole site in the context of its landscape setting and ecological functions (with particular reference to the Conservation Management Areas identified in the Redland City Environmental Inventory).

4.7.10 Identify Opportunities for Ecological Enhancement

(1) Describe and accurately map (survey) -

(a) enhancement corridor, enhancement links and enhancement area categories identified on the Bushland Habitat Overlay Map;

(b) other opportunities or options for development to restore or enhance the ecological features, functions, habitat, corridors or links at the site and in context with its location in the landscape either as additions or alternatives to the enhancement link nominated in the Bushland Habitat Overlay Map.

Note -

These areas may currently have few, readily identifiable, ecological values or degraded ecological values and features. The enhancement area category of the overlay ensures that all development proposals contribute to rehabilitation of the City's environmental values.

4.7.11 Statements of Commitments to Ecological Enhancement

(1) Provide a clear statement of commitment through specific actions and implementation measures to the restoration and enhancement of enhancement corridor, enhancement link, or additional or alternative approaches and enhancement areas.

(a) Include details on -

(i) appropriately scaled drawings, the location and extent of activities or works to be carried out;

(ii) the current condition of the land to be rehabilitated or enhanced;

(iii) how the commitment will enhance the site's ecological values;

(iv) the timetable for implementation and integration with phases of the development such as construction, operation, decommissioning, maintenance or rehabilitation;

(v) who will be responsible for the work and handover arrangements to successive management, demonstrating relevant expertise;

(vi) how the areas will be managed to guarantee sustainable establishment;

(vii) areas, preferably in public ownership, external to the development site which could be enhanced.

(2) Where native animals and native plant species, species groups or ecosystems that are listed as rare, vulnerable, and endangered, use or potentially use the development site or its immediate surrounding areas, the ecological assessment report -

(a) provides background information on the species, including natural life history, habitat requirements, reproduction, behaviour, predation, competition and role within the ecosystem;

(b) describe the current conservation status - including habitat loss, threatening processes, population size and structure on the site and in the Redland City;

(c) demonstrate how the development will protect, manage and enhance the species and its habitat at the site, and individuals on the site;

(d) include and describe management and actions that -

(i) will protect, manage and enhance the species and its habitat at the site, and individuals on the site;

(ii) are in keeping with any species recovery or conservation plans relevant to that species, species group or ecosystem;

(iii) include any significant off-site management or actions necessary to complement those taken on site;

(iv) ongoing monitoring and evaluation requirements and commitments;

(e) state commitments to the above by the developer and commitments required of other parties.

4.7.12 Identify and Describe Avoidance, Mitigation and Management Measures

(1) Identify and describe measures to avoid, mitigate and manage ecological and environmental impacts that may be incorporated into the nature of development, its siting and design, and operations during and after construction.

(2) The purpose of these measures is to -

(a) eliminate, minimise, reduce, relocate or recognise the impacts on the environment;

(b) find ways of achieving development outcomes that have least environmental impact;

(c) maximise opportunities for environmental benefits within development projects;

(d) ensure unavoidable impacts on the environment are within acceptable levels;

(e) ensure measures are implemented as specified;

(f) provide systems for monitoring the effectiveness of measures;

(g) establish procedures for corrective actions should measures fail.

(3) Prepare proposal and management plans, such as Vegetation Management Plan, detailing the location, extent and nature of all measures designed to prevent, avoid, mitigate or manage the identified impacts, including -

(a) timing of start and finish of measures;

(b) identification of responsibility and allocation of resources to undertake measures;

(c) list of actions to achieve measures;

(d) any monitoring or auditing program essential to the success of measures;

(e) contingencies for non-compliance and in-effective measures.

(4) Information clearly demonstrates how the proposed mitigation strategies will enable the proposal to meet the nature conservation obligations as described in the relevant statutory planning mechanisms, in particular in relation to vulnerable, endangered or rare flora or fauna species, habitats or ecosystems affected.

4.8 Habitat Protection Overlay

4.8.1 Principles and Purpose of Habitat Protection, Management and Enhancement

(1) The purpose of the Habitat Protection Overlay is to ensure that development protects and provides for the long-term management and improvement of environmental values. These values include -

(a) habitats necessary for the long-term life of native plants, animals and ecosystems;

(b) corridors, networks and areas that help movement of native animals;

(c) koala habitat;

(d) native animals, native plants and ecosystems that are common, vulnerable, rare or endangered as defined by the *Nature Conservation Act 1992*.

(2) The Overlay requires development to protect existing environmental values through various measures. This may involve siting the development in a suitable area of the property that does not interfere with the environmental values. Often development will have to be setback a certain distance from bushland or marine habitat, or outside enhancement corridors. In certain areas development needs to improve environmental values through re-vegetating degraded areas with native plants and removing weed species.

(3) The Redland City Council recognises eleven broad principles that underpin the protection, management and enhancement of habitat in the City. These are -

(a) Principle 1: In order to protect biodiversity, all the important habitat types in the City must be protected and managed not just the ones that are easiest to protect or that we most like;

(b) Principle 2: In Redland City we protect and manage habitat areas for all the species present and, where information is available, act to the benefit of individual species where possible;

(c) Principle 3: The more like natural bush, the greater the habitat value of an area. Management should aim for complex, diverse, multi-layered bush with understorey that closely approximates that which existed prior to European settlement;

(d) Principle 4: Our first priority is to protect and manage the habitat we have because once it is lost it is gone for good;

(e) Principle 5: Many cleared areas provide some habitat and freedom of movement for native animals, which can be essential to their survival. These values must be recognised, managed and enhanced if wildlife is to be protected in Redlands;

(f) Principle 6: In replacing habitat, allow the bush to regenerate naturally wherever possible and where replanting is required, provide clear guidance regarding appropriate standards for replanting work;

(g) Principle 7: In addition to managing 'generalised' habitats for wildlife, the local government must address the specific survival needs of some species of concern and some ecosystems and some areas of concern;

(h) Principle 8: Core habitat areas must be protected and maintained as 'reservoirs' and sanctuaries for wildlife in the network of habitat across the landscape;

(i) Principle 9: Patches of bushland must be protected managed and enhanced for their value as habitat, particularly those in lowland areas that function as 'nodes' in the network of habitat and corridors across the landscape;

(j) Principle 10: A web of wildlife corridors and linkages must be maintained and established to allow wildlife to move across the landscape and in particular between habitats;

(k) Principle 11: Barriers to wildlife movement must be identified and managed preferably removed wherever possible, to promote safe movement of animals across the landscape and in particular between habitats.

4.8.2 Relationship to Local Law 6 - Protection of Vegetation

(1) The local government operates three Local Laws relevant to habitat and corridor management. These are -

(a) Local Law No. 6 - Protection of Vegetation;

(b) Local Law No. 15 - Parks and Reserves;

(c) Local Law No. 18 - Nuisances.

(2) Of these, Local Law No. 6 - Vegetation Protection and Vegetation Protection Orders under the Local Law are the most important for protecting habitat on private land.

(3) Local Law No. 6 states that, "unless permitted, a person must not damage protected vegetation" and details the maximum penalties, which may include replanting/regeneration of the native vegetation.

(4) Habitat is mainly protected under Local Law 6 on freehold land through a Vegetation Protection Order (VPO) made by resolution of the local government. An expert report is prepared identifying the vegetation to be protected and the criteria for its protection. The local government will notify the public and affected land owners, and keep details on the local government's land record as well as in a public register. Large areas of the City fall under a Vegetation Protection Order.

(5) The Habitat Protection Overlay replaces the former role of 'Greenspace' in Local Law 6 where vegetation in areas shown as Greenspace on the *Strategic Plan 1988* was automatically regarded as 'protected vegetation' under Local Law 6. For the purposes of Section 24(b) of Local Law No.6 – Protection of Vegetation, the Koala Habitat, Bushland Habitat, Enhancement Corridor, Enhancement Habitat, Enhancement Linkage and Marine Habitat depicted on the Bushland Habitat Overlay Map is the land described in section 24(b) as land which is indicated in a Development Control Plan, Local Area Plan or Strategic Plan as land that is or may be required for Greenspace and also indicates that the land is worthy of special protection, and that the land is not currently zoned for that purpose.

4.8.3 Relationship to Remnant Vegetation Under the Vegetation Management Act 1999

(1) The definition of 'assessable development' under Schedule 8, Part 1, Table 4 of the *Integrated Planning Act 1997*, and relationship to the *Vegetation Management Act 1999* (VMA), establish that clearance of non-remnant vegetation in the City is not included as 'assessable development' under IPA.

(2) Vegetation defined as 'category X' under the VMA - being non-remnant or regrowth, is specifically exempted under the VMA and the IPA definitions of 'assessable development'.

(3) However, regrowth areas are recognised and protected for their high conservation values in Redland City mainly but not exclusively through -

(a) Zones and in particular the Conservation and Environmental Protection Zones;

(b) Habitat Protection Overlay.

(4) All native vegetation is protected to the extent specified in the Habitat Protection Overlay in addition to the requirements for remnant vegetation under the *Vegetation Management Act 1999* and *Integrated Planning Act 1997*.

4.8.4 Role of the Environmental Inventory Stage 4

(1) The Habitat Protection Overlay Map is a simplification of the Environmental Inventory Stage 4 (EIS4) mapping adopted by Council.

(2) Used as a planning tool for focusing Council policy and actions where natural values are highest, the EIS4 is used as a basis for designating areas as the Conservation Zone and Environmental Protection Zone.

(3) The methodology for translating the EIS4 to the zones and overlay is a public document and available on the RSC website.

(4) The EIS4 is not a fauna and flora descriptive tool, despite its title, as it also provides mapping of the City's habitats and their ecological function.

(5) It links habitat values to a planning and management response by using categories called Conservation Management Areas (CMA).

(6) The CMA code indicates firstly the area's status, being Priority, Major, General, Enhancement, and also the areas structure and function in the landscape, Habitat, Patch, Corridor, Foreshore, Link, Mosaic.

(7) As such, it clearly indicates areas where the Council wishes to "protect, maintain and rehabilitate environmental values and biodiversity" and "enhance community lifestyle and the natural environment".

(8) The EIS originated from an aerial photographic assessment of vegetation and habitats by Chenoweth Environment Planning and Landscape Architecture.

(9) Accompanying the original inventory was a report describing the conservation significance of each CMA. Since that time, incremental adjustments have been made to the EIS to account for

changes in vegetation cover resulting from development approvals, errors, omissions and new information.

(10) The EIS 4 does not extend into adjacent local authorities, cover Moreton Bay, extend to the Southern Moreton Bay Islands or North Stradbroke Island.

(11) The EIS4, contains four categories of CMA, each of which is further subdivided according to broad ecological function as -

(a) **Priority** which includes -

(i) Priority Habitat (PH);

(ii) Priority Corridors (PC);

(iii) Priority Tidal (PT);

(iv) Priority Patch (PP);

(v) Priority Foreshore (PF);

(b) **Major** which includes -

(i) Major Habitat (MH);

(ii) Major Corridor (MC);

(iii) Major Foreshore (MF);

(iv) Major Patch (MP);

(v) Major Link (ML);

(vi) Major Mosaic (MM);

(c) **General** which includes -

(i) General Habitat (GH);

(ii) General Corridor (GC);

(iii) General Patch (GP);

(iv) General Links (GL);

(v) General Mosaic (GM);

(d) **Enhancement** which includes -

(i) Enhancement Corridors (EC);

(ii) Enhancement Foreshore (EF);

(iii) Enhancement Link (EL);

(iv) Enhancement Habitat (EH);

(v) Enhancement Tidal (ET).

(12) The EIS4 CMAs are grouped to provide simplified categories in the Bushland Habitat Overlay Map of the Habitat Protection Overlay as detailed in Table 1.

Table 1 - Conversion of CMAs to Overlay Categories

Ecological Function Sub Areas of EIS 4	Conservation Management Areas of EIS 4			
	Priority	Major	General	Enhancement
Tidal	Marine Habitat	-	-	Enhancement Corridor
Foreshore	Bushland Habitat	Bushland Habitat	-	Enhancement Corridor
Habitat	Bushland Habitat	Bushland Habitat	Bushland Habitat	Enhancement Area
Patch	Bushland Habitat	Bushland Habitat	Bushland Habitat	-
Mosaic	-	Bushland Habitat	Bushland Habitat	-
Corridor	Bushland Habitat	Bushland Habitat	Bushland Habitat	Enhancement Corridor
Link	-	Bushland Habitat	Bushland Habitat	Enhancement Linkage

(13) A set of preliminary rules was used as a basis for the allocation of land in the City to Bushland Habitat Overlay categories as described in the document titled '*Preliminary rules for use of Environmental Inventory Stage 4.1 in Overlay and Zones of the draft Planning Scheme*': *23 August 2005* (available electronically from the Council).

(14) A manual check and verification of the outcome of the conversion was undertaken and additional filtering steps were considered before arriving at the final outcome as depicted on the Bushland Habitat Overlay Map for any particular lot.

4.8.5 Terminology of the Habitat Protection Overlay

(1) The Habitat Protection Overlay Code Includes the following maps and categories -

(a) Bushland Habitat Overlay Map categories are -

(i) Enhancement Area;

(ii) Enhancement Link;

(iii) Koala Habitat;

(iv) Enhancement Corridor;

(v) Bushland Habitat;

(vi) Marine Habitat;

(b) State Koala Policy Map (which is the map included in the State Government's *SEQ Regional Plan 2005-20016 - Interim Guidelines: Koalas and Development*) categories are -

(i) Koala Conservation;

(ii) Koala Sustainability;

(iii) Urban Koala Areas.

4.8.6 Enhancement Habitat

(1) Enhancement Areas are cleared areas that are part of the habitat of native animals, or that provide a reasonable freedom of movement for native animals in comparison to that offered by, for example, urban lots, shopping centres, or industrial lots.

(2) Avoiding further barriers to movements of native animals and undertaking some replanting to improve movements of native animals in Enhancement Areas contributes to the long-term survival of native animal populations, such as koalas.

(3) Enhancement Areas -

(a) comprise land that has been primarily cleared of vegetation;

(b) present wildlife with a reasonable freedom of movement to nearby habitat and/or vegetation;

(c) represent an area where barriers to native animal movements should be avoided in the future and safe crossings implemented where needed to cross railways or roads;

(d) represent an area where native animal movements should be encouraged and enhanced through replanting of native vegetation and other artificial habitat enhancements such as nesting boxes, refuge poles for koalas;

(e) represent an area which provides vegetated or un-vegetated buffers to intact habitat areas, reducing the impact of edge effects.

4.8.7 Enhancement Corridor

(1) Enhancement Corridors are cleared or partially cleared areas where there are opportunities to create and protect wildlife corridors between significant bushland, foreshore and tidal habitats nearby.

(2) Intensive replanting, regeneration and habitat re-construction techniques can enhance corridor function by increasing and improving the connectivity and robustness of habitats, thereby contributing to the long term survival of species and ecosystems.

(3) Adjacent to foreshores, enhancement corridors also protect tidal wetland areas and the coastal ecosystems.

(4) Dams may be included in enhancement corridors for their habitat function, but a width of relatively dry land within the corridor for movement of terrestrial animals and arboreal animals is needed to maintain effective corridor function.

(5) Enhancement Corridors have the following attributes -

(a) are cleared or degraded areas where there are opportunities for enhancement to create better wildlife corridors between significant habitats;

(b) are sited along drainage lines, waterways, foreshores, and between existing patches of vegetation;

(c) incorporate existing stands of vegetation, such as individual trees, lines of trees, trees along a boundary fence or waterway where enhancement builds on the habitat and linkage functions already present;

(d) are 100 metres wide, and measured from the high tide mark or 50 metres from the top of each bank, unless there is an existing immovable constriction which limits that width. In such a case, a wider width on the opposite bank is preferred to compensate for loss of width on the other bank where possible;

(e) are wider than 100 metres where the corridor incorporates a structure or features such as a dam or other elements that may limit wildlife movement;

(f) there are sight distances of 50 metres, or more, for vehicular traffic where corridors cross roads, and wildlife is encouraged to cross the road rather than moving beside the road before crossing, which is not always possible;

(g) signs, rumble strips, speed limits, tunnels, fauna bridges, raised roads, exclusion fencing and other appropriate actions are undertaken to improve the safety of fauna crossing roads, particularly where there is a corridor intersecting with a road;

(h) are sometimes enhanced as a compensation for removing existing vegetation, such that there is a net improvement or no net loss of ecological values.

4.8.8 Enhancement Links

(1) Enhancement Links are cleared or degraded areas where there are opportunities for replanting or revegetation that will link patches of bush with significant bushland habitats nearby, such as Marine Habitat and Bushland Habitat.

(2) Enhancement and linking improves the connectivity and robustness of habitats, and therefore the long term survival of species and ecosystems.

(3) Enhancement Links differ from Enhancement Corridors in that -

(a) they do not run along creeks, waterways, or drainage lines, but rather are often located along property boundaries or hills, or at the closest linking position between two patches of bushland;

(b) their general location is indicated on the Bushland Habitat Overlay Map but the exact design and location is negotiable where developing areas are planning open space networks and corridors.

(4) The location of links in the landscape is dependant on the best location to achieve connection of patches of habitat, the location of existing vegetation between the patches of habitat, the reduction of edge effects of the link and the habitat patches, and the cost of rehabilitation.

(5) Enhancement Links have one or more of the following attributes -

(a) substantially or totally cleared or degraded area;

(b) often contain individual trees or lines of trees;

(c) present opportunities for replanting to link patches of bush with habitat areas;

(d) opportunity for potential expansion or widening of an existing link;

(e) should be 100 metres wide unless there is a barrier preventing achievement of that width;

(f) a link should be wider than 100 metres where it incorporates a structure or features such as a dam so that terrestrial fauna can move thought the link;

(g) a link is designed to facilitate animal movement between habitat areas and as such it is not essential in all cases than it achieves a fixed specified width or provides a functional role as habitat;

(h) contain few barriers to movement of wildlife;

(i) there are sight distances of 50 metres, or more, for vehicular traffic where corridors cross roads, and wildlife is encouraged to cross the road rather than moving beside the road before crossing, which is not always possible;

(j) signs, rumble strips, speed limits, tunnels, fauna bridges, raised roads, exclusion fencing and other appropriate actions are undertaken to improve the safety of fauna crossing roads, particularly where there is a corridor intersecting with a road.

4.8.9 Bushland Habitat

(1) The Bushland Habitat category includes large areas of the mainland of the City where significant bushland currently exists.

(2) Bushland Habitat includes all of the habitat identified as Priority, Major or General Conservation Management Area in the Environmental Inventory Stage 4, with the exception of some koala habitat and Marine Habitat areas among these CMAs.

(3) Bushland Habitat includes -

(a) Priority areas comprising -

(i) bushland in natural or near natural condition;

(ii) all areas of State and Regional biodiversity or conservation significance;

(iii) large tracts of continuous bushland with minimum disturbance;

(iv) all remnant vegetation;

(v) estuarine and freshwater wetlands above high tide mark on the mainland coast, waterways and the island environments of Moreton Bay;

(vi) all Ramsar wetland sites above high tide mark.

(b) Major Areas comprising -

(i) bushland adjacent, or in close proximity to, Priority Areas;

(ii) semi-isolated remnants of moderate size and fragmentation with low level of disturbance that may not always be continuous;

(iii) large areas of dense mosaic bushland frequently interspersed by small patches of clearing;

(iv) areas functioning as smaller bushland habitats, corridors, links and mosaic areas;

(v) in natural or near natural condition;

(vi) all areas of local biodiversity or conservation significance;

(c) General Areas comprising -

(i) smaller patches and strips of native vegetation which although often highly disturbed, still provide habitat niches, stepping stones and local corridors for fauna and are significant at a local level;

(ii) represent examples of vegetation associations formerly more widespread throughout the region;

(iii) vegetation that is regarded as regrowth under the Common Nature Conservation Classification System;

(iv) scattered bushland with local habitat and amenity value;

(v) areas where small patches of native vegetation and individual trees form a mosaic of native vegetation with highly disturbed areas, often interspersed with houses, sheds and roads.

4.8.10 Marine Habitat

(1) Marine Habitat category includes large areas adjacent to the mainland of the City where significant tidal habitat currently exists.

(2) Marine Habitat includes all of the Priority Tidal Conservation Management Areas identified in the Environmental Inventory Stage 4.

(3) Marine Habitat category includes areas between high tide and low tide mark that -

(a) are significant tidal ecosystems in natural or near natural condition;

(b) are areas of state and regional biodiversity or conservation significance;

(c) support aquatic based flora and fauna communities;

(d) have a water quality maintenance function;

(e) are mangrove, salt marsh and mudflat habitat areas;

(f) are tidal wetlands on the mainland coast, associated waterways and island environments of Moreton Bay;

(g) are Ramsar wetland sites.

4.8.11 Koala Habitat

(1) The Koala Habitat category of the Habitat Protection Overlay mainly covers private land with zones that allow for urban development that is likely to remove koala habitat.

(2) In particular, the Koala Habitat outcomes focus on koala habitat trees and aim to achieve three main outcomes where a development is proposed -

(a) retention of koala habitat trees to the extent practicable;

(b) ensuring that adequate buffers are in place between retained koala habitat trees and development;

(c) ensuring that where koala habitat trees are removed, they are replaced such that there is no net loss of koala habitat trees.

4.8.12 Explanation of H1, H2 and H3 Areas

(1) The Habitat Protection Overlay Code applies different specific outcomes to proposed uses and other development depending on the location of development within what are termed H1, H2, and H3 areas.

(2) The following scenarios are used because it is necessary to be very clear about exactly where on a lot a development is proposed.

(3) On a lot or premises that is triggered by the Bushland Habitat Overlay map - that is, some part of the lot is covered by one of the map categories being Enhancement Area, Enhancement Link, Koala Habitat, Enhancement Corridor, Bushland Habitat and Marine Habitat -

(a) the H1 area refers to the area of a lot or premises that IS NOT covered by any Overlay category on the Bushland Habitat Overlay map. This part of the lot is therefore least constrained and the better location for any development;

(b) there may be no H1 area; for example where the lot is entirely covered by one or more of the map categories above, in this instance either H2 or H3 areas apply;

(c) the H2 area refers to the area of a lot or premises that IS shown as covered by any overlay category on the Bushland Habitat Overlay map;

(d) this part of the lot is therefore more constrained by the Overlay and the more ecologically sensitive location for any development;

(e) the H2 area may be shown as any one or a combination of the Enhancement Area, Enhancement Link, Koala Habitat, Enhancement Corridor, Bushland Habitat and Marine Habitat categories;

(f) the H3 area refers to the area of a lot or premises that is shown on the State Koala Policy Overlay Map as being partly or wholly within the Koala Conservation, Koala Sustainability or Urban Koala Areas;

(g) there is always a H2, or H3 area or both on a lot or premises that is affected either of the Habitat Protection Overlay Maps;

(h) the H3 area may overlap H1 or H2 areas or both on any lot or premises.

4.9 Application of the Overlay

(1) Most material change of use and development are code assessable under the Habitat Protection Overlay.

(2) The Habitat Protection Overlay Code applies to a development applies where a lot or premises is wholly or partly covered by any one of the categories shown on either the -

(a) Bushland Habitat Overlay Map; or

(b) State Koala Policy Map, which is the map included in the SEQ Regional Plan 2005-2026 - *Interim Guidelines: Koalas and Development*.

(3) If neither of these Overlay Maps shows a category covering any part of the lot or premises, the Habitat Protection Overlay does not apply to the development.

(4) In urban areas, the Overlay Map categories follow biological rather than cadastral boundaries that often cut across land tenure boundaries.

(5) Where only a small part of a lot is affected by the Overlay - such as a patch of trees, or a waterway, or an ecological corridor - the larger part may be perceived as of little ecological value, for example on larger undeveloped lots that are cleared.

(6) Often the valued ecological feature may be largely adjacent to or located on a neighbouring lot that may not be considered as part of the development site.

(7) In these situations, the Overlay focuses on -

(a) directing development away from parts of the lot with more ecological value to parts with less ecological value;

(b) protection and management of the, sometimes small, valued areas of the lot in the course of development that occurs nearby on the lot or surrounding it;

(c) enhancement works and activities on any part of the lot that will help restore or consolidate the ecological values present, such as Enhancement Linkages.

4.9.1 Basic Habitat Protection Measures for Development

(1) Many of the zones in the planning scheme include overall outcomes that require uses and other development to -

(a) maximise the retention of native vegetation;

(b) maximise the use of planting species that are native and characteristic to the area;

(2) Generally, vegetation may only be removed from the development site -

(a) within designated development envelope area;

(b) where necessary for the construction of works and services;

(c) where necessary for the construction of access to designated development envelopes, dams or similar development components;

(d) where necessary for public safety, or continuing health of desired native specimens.

(3) Placement of proposed development footprints too close to desired vegetation, on the site or adjacent property or road reserve will not be acceptable.

(4) All uses and other development affected by the Habitat Protection Overlay other than reconfiguration must meet a basic standard of habitat protection, including -

(a) development is located -

(i) a minimum of 100 metres from any land shown as marine habitat; or

(ii) a minimum of 60 metres from any land shown as bushland habitat; or

(iii) outside any land shown enhancement corridor; or

(iv) within a development envelope;

(b) development does not remove native plants from outside a development envelope, where it is within marine habitat, bushland habitat or an enhancement corridor;

(c) road works, services and driveways are co-located where practicable to minimise loss or disturbance of native vegetation, particularly large trees.

(d) on lots with development envelopes, circular, that is one-way, driveways are not acceptable unless it can be demonstrated that these are necessary because of -

(i) topography;

(ii) natural constraints; or

(iii) a requirement to preserve a natural feature such as a significant large tree;

(e) any re-vegetation or landscaping uses native plants identified in Schedule 10 - Vegetation Species List as being suitable to the location;

(f) removal of weed species identified in Schedule 12 - Weed Species List from the entire site;

(g) design accessway design limits vehicle speed to 30km per hour;

(h) locate and design accessways between roads and the development or development envelope to minimise the need for vegetation clearance and to allow for infrastructure provision;

(i) locate fencing, within the development envelope or outside any land shown as marine habitat, bushland habitat, enhancement corridor and design to fauna friendly fence standard;

(j) development does not result in artificial light being directed into an enhancement corridor, bushland habitat or marine habitat.

(5) Reconfiguration meets the same basic standard of habitat protection, as detailed above, with the exception that -

(a) roads design limits vehicle speed to 30km per hour;

(b) lot creation incorporates development envelope(s) that are of sufficient size to contain all expected uses and associated activities, including buildings, structures, infrastructure and access;

(c) the requirement regarding artificial light being directed into an enhancement corridor, bushland habitat or marine habitat, is not relevant.

(6) In addition to the basic standard of habitat protection, additional measures to protect habitat are necessary according to the Overlay Map categories present on the development site and indicated on the Bushland Habitat Overlay Map. These are detailed below.

4.9.2 Additional Measures for Enhancement Areas

(1) Enhancement areas increase habitat opportunities and improve movement of native animals between habitat areas.

(2) These outcomes are achieved by -

(a) Uses and other development, other than reconfiguration -

(i) incorporate and address the requirements of the basic standard of habitat protection;

(ii) minimises removal of native plants within an enhancement area, particularly mature trees, plants that form corridors for movement of native animals, trees along fence lines, and groups of trees;

(iii) plant, within the lot or premises, a minimum of one native tree or shrub per 400m^2 of enhancement area, that are selected from Schedule 10 - Vegetation Species List as being suitable to the location;

(b) Reconfiguration -

(i) incorporates and addresses the requirements of the basic standard of habitat protection;

(ii) incorporates and addresses the additional requirements for enhancement area listed above;

(iii) plant within the road reserve, a minimum of five trees or shrubs per lot created that are native species selected from Schedule 9 - Street Trees as being suitable to the location.

4.9.3 Additional Measures for Enhancement Links

(1) Enhancement Links should identify, establish, protect and enhance the function and long-term viability of the corridor and allow for movement of native animals between habitat areas.

(2) These outcomes are achieved by -

(a) Uses and other development, other than reconfiguration -

(i) incorporating and addressing the requirements of the basic standard of habitat protection;

(ii) identifying the most suitable location for the enhancement link;

(iii) being directed away from the link area, where possible;

(iv) identifying and retaining habitat trees, old and dead standing trees, ground logs and bush rocks, wherever possible, within the enhancement link;

(v) where the link is less than 100 metres wide, replanting native vegetation of appropriate species to expand the link to a maximum of 100 metres in width;

(vi) minimises edge effects on the link;

(vii) limiting fencing and other barriers to wildlife movement within the link and use fauna friendly fencing standard as a priority where fencing is required;

(b) Reconfiguration -

(i) incorporates and addresses the requirements of the basic standard of habitat protection;

(ii) incorporates and addresses the additional requirements for enhancement link listed above;

(iii) plant within the road reserve, a minimum of five trees or shrubs per lot created that are native species selected from Schedule 9 - Street Trees as being suitable to the location.

4.9.4 Additional Measures for Enhancement Corridors

(1) Enhancement Corridors should identify, establish, protect and enhance the function and long-term viability of the corridor and allow for movement of native animals between habitat areas.

(2) These outcomes are achieved by -

(a) all uses and other development other than reconfiguration -

(i) incorporating and addressing the requirements of the basic standard of habitat protection;

(ii) incorporating and addresses the requirements for enhancement link;

(iii) retaining old and dead standing trees, ground logs and bush rocks, wherever possible, within the enhancement corridor;

(iv) where the enhancement corridor is less than 100 metres wide, replanting native vegetation of appropriate species to expand the corridor to a minimum of 100 metres in width;

(v) replanting native vegetation within the lot or premises, by planting a minimum of one native tree or shrub per 5m^2 of corridor area with species selected from Schedule 10 - Vegetation Species list as being suitable to the location;

(vi) replanting native vegetation within any degraded bushland habitat or marine habitat within the lot or premises, by planting a minimum of one native plant per $5m^2$ in the bushland habitat or marine habitat areas with species selected from Schedule 10 - Vegetation Species list as being suitable to the location;

(b) Reconfiguration -

(i) incorporates and addresses the requirements of the basic standard of habitat protection;

(ii) incorporates and addresses the additional requirements for enhancement corridor listed above;

(iii) incorporates and addresses the requirements for enhancement link;

(iv) undertakes an ecological assessment report as a component of the development;

(v) plants within the road reserve, a minimum of five trees or shrubs per lot created that are native species selected from Schedule 9 - Street Trees as being suitable to the location.

4.9.5 Design of Enhancement Links and Corridors

(1) Movement of fauna and flora between patches of habitat is dependent on key design principles being adopted when planning for development or a change in land use.

(2) These principles are briefly detailed below.

(3) For more detailed information regarding corridor design concepts and principles refer to the literature sources provided in Bibliography.

(4) Ecological corridors should be as wide as possible by -

(a) achieves the corridor widths are set out in the planning scheme code, overlays and maps;

(b) achieves wider corridors that are used by a wider range of fauna types and remain more effective over time. The minimum corridor width of 100 metres is recommended to facilitate movement of mammals and other terrestrial wildlife through bushland areas. However, widths of up to 500-700 metres may be necessary to provide protection to forest-dwelling birds from aggressive edge-dwelling birds.

(5) An ecological corridor should provide adequate habitat by -

(a) providing sufficient area and types of habitat suitable for the full range of fauna species that inhabit or move through the local area;

(b) considering the diversity and structural complexity of the vegetation communities present. For example, densely vegetated riparian corridors may not support the dispersal or movement of koalas between critical habitats in the long term. Conversely, sparsely vegetated open woodlands may inhibit the successful movement of species such as the swamp wallaby (Wallabia bicolour) which require greater vegetation coverage and density.

(6) Minimise interruptions to the ecological corridor by -

(a) removing interruptions and intrusions to the corridor that encourage environmental weeds, domestic animals and illegal dumping. Infrastructure and services such as roads, sewerage and water mains, and electricity easements can present barriers to wildlife movement and dispersal. The extent of disruption to any particular species will depend on the ecology or life history of that species, and the nature and extent of the intrusion. For example, regular slashing of an understorey within an easement interrupts connectivity of the corridor, effectively barricading movement of ground-dwelling mammals as a result, although it may not affect the movement of the local forest bird community.

(b) where the provision of service infrastructure and other intrusions is necessary, a common disturbance corridor or easement should be used where possible.

(c) using construction techniques and maintenance regimes that minimise disturbance to the corridor, wherever possible.

(7) Minimise edge effects that include -

(a) increased or decreased solar radiation;

(b) increased or decreased wind and temperature;

(c) decreased relative humidity;

(d) increased nutrients;

(e) changes in soil chemistry;

(f) modified hydrological regimes, such as increase or decrease in channel, surface and groundwater flows;

(g) increased fire intensity or frequency;

(h) introduction of rubbish including green wastes;

(i) increased pedestrian access resulting in greater disturbance;

(j) changes in vegetative structure and composition;

(k) increased weed diversity and abundance;

(l) spread of exotic lawn and groundcover species;

(m) increase in pioneer flora species;

(n) increased opportunistic aggressive fauna;

(o) changes in animal behaviour;

(p) increased predation;

(q) increased artificial lighting;

(r) increased noise levels;

(8) Given the narrow width of remnants and corridors in an urban setting it is not possible to eliminate the degrading influence of all edge effects. However, it is possible to reduce their impact.

(9) Corridor widths must take edge effects into account. If penetration by edge effects is for example, 10 metres, then a corridor would need to be substantially more than 20 metres wide to compensate for the disturbance on its edges.

(10) Edge effects and other indirect impacts of development on ecological features and processes within or adjacent to the site should be identified, avoided or mitigated by best practice planning and design measures.

(11) Acceptable measures include, but are not limited, to -

(a) retain bushland habitat areas in a compact form, such as roughly circular or rectangular, to minimise perimeter to area ratios;

(b) keep corridor edge lines simple - avoid convoluted or indented boundaries;

(c) create or retain a buffer or separation area incorporating ecologically compatible activities adjacent to the habitat area, such as gardens, parkland, sporting fields or low density housing;

(d) set back development at least 100 metres from a freshwater wetland, or the Highest Astronomical Tide line of a tidal wetland;

(e) a distance from bushland habitat areas which is equal to the distance to which edge effects are known or likely to penetrate;

(f) adequately managing and treating stormwater run-off from the site to control nutrient and sediment loads and outlet velocities;

(g) locating any fire breaks or fuel reduction zones within the development site;

(h) seeking co-operative management/covenants with adjacent landowners to minimise threats or disturbances.

(12) Minimise narrow corridor lengths and include nodes to reduce edge effects by -

(a) existing corridors are often long, narrow linear features surrounded by land uses such as residential development. This pattern has a high edge to area ratio which increases the impact of edge disturbances.

(b) increase the likelihood of species successfully moving to larger, more suitable habitats within the network.

(c) create nodes that retain selected habitat areas within the corridor that are wider than the corridor itself. Retaining or rehabilitating a corridor node may compensate for a relatively narrow corridor by providing staging points for fauna movement and a refuge from catastrophic disturbances such as fires and drought.

(13) Rehabilitate disturbed areas to -

(a) enhance habitat values. Ecological corridors are subject to disturbances such as fire, weed invasion or clearing. They can be rehabilitated to enhance habitat values. This is especially important for currently degraded areas which have the potential to create ecological corridor links and nodes. These areas are identified as enhancement corridors and enhancement links on the Bushland Habitat Overlay Map.

4.9.6 Additional Measures for Marine Habitat and Bushland Habitat

(1) The Habitat Protection Overlay requires that development in Marine Habitat and Bushland Habitat, identify, protect and maximise environmental values, habitat function and viability.

(2) These outcomes are achieved by -

(a) Uses and other development, other than reconfiguration -

(i) incorporate and address the requirements of the basic standard of habitat protection;

(ii) incorporate and address the requirements for enhancement corridor;

(iii) undertakes an ecological assessment report as a component of the development;

(iv) replant native vegetation within any degraded bushland habitat or marine habitat within the lot or premises, by planting a minimum of one native plant per $5m^2$ of bushland habitat or marine habitat with species selected from Schedule 10 - Vegetation Species list as being suitable to the location;

(v) is located within a development envelope that is of sufficient size to contain all expected uses and associated activities, including but not limited to -

a. buildings and structures,

b. infrastructure,

c. access and parking,

d. wastewater disposal,

e. domestic gardens and exotic lawns,

f. cut and fill batters,

g. domestic animal exercise or livestock areas,

h. operation of all motorised vehicles including motorcycles,

i. recreational areas;

(vi) does not generate noise within or at the edge of an habitat areas in excess of the standards for noise as a barrier to wildlife movement;

(vii) the vertical or horizontal illumination resulting from direct, reflected or other incidental light emanating from the development does not exceed standards for light as a barrier to wildlife movement at or above ground level outside the boundary of an development envelope, where one exists, or into bushland areas in other circumstances;

(b) Reconfiguration -

(i) incorporates and addresses the requirements of the basic standard of habitat protection;

(ii) incorporates and addresses the additional requirements for marine habitat and bushland habitat listed above;

(iii) undertakes an ecological assessment report as a component of the development;

(iv) plants within the road reserve, a minimum of five trees or shrubs per lot created that are native species selected from Schedule 9 - Street Trees as being suitable to the location.

4.9.7 Additional Measures for Koala Habitat

(1) The Koala Habitat outcomes focus on koala habitat trees and aim to achieve three main outcomes where a development is proposed -

(a) retention of koala habitat trees to the extent practicable;

(b) ensuring that adequate buffers are in place between retained koala habitat trees and development;

(c) ensuring that where koala habitat trees are removed, they are replaced such that there is no net loss of koala habitat trees.

(2) The requirement for retention of koala habitat trees seeks to ensure, as far as is practicable, that koala habitat trees are not removed as a consequence of development at the site.

(3) Koala habitat trees are -

(a) trees of the general Eucalyptus, Corymbia, Angophora, or Lophostemon greater than 4 metres in height or with a diameter greater than 10 centimetres at 1.3 metres above ground (*as defined in the State Government's SEQ Regional Plan 2005-20016 - Interim Guidelines: Koalas and Development*); or

(b) other trees, including non-native species, greater than 4 metres in height or with a diameter greater than 10 centimetres at 1.3 metres above ground, that offer refuge or habitat to koalas.

(4) Buffers for koala habitat trees ensure -

(a) as far as is practicable, the ongoing viability of koala habitat trees retained on a development site;

(b) access, utility infrastructure, buildings or structures, including foundations -

(i) do not encroach on the root zone in a manner that jeopardises the long-term viability of the tree; or

(ii) do not encroach on the area around the trunk to a distance of no less than the drip line of the mature canopy in a manner that jeopardises the long-term viability of the tree; or

(iii) embrace and include the individual koala habitat tree(s) in design and siting in a manner that ensures the long term viability of the tree;

(iv) on a lot or premises greater than 2500 square metres, where bushfire hazard is assessed and shown as High or Medium on the Bushfire Hazard Overlay Map, a minimum setback of 1.5 times the predominant mature canopy height of koala habitat trees is required.

(5) No net loss of koala habitat trees ensure -

(a) to maintain, at least the current number of habitat trees available to koalas within the Koala Habitat categories;

(b) if a development results in the removal of koala habitat trees, the no net loss requirement is achieved by -

(i) control over works on-site and off-site, noise and lighting, access over/under barriers, during construction such as wire on barriers to act as a ladder;

(ii) replanting to replace the koala habitat trees removed -

a. at the rate of one tree for every one metre in height of tree lost, by way of example, a 30 metre high tree would be replaced with 30 trees and each tree is replaced with a minimum of 4 trees replanted since koala habitat trees are by definition greater than four metres in height;

b. in accordance with requirements for successful replanting and after planting care and management, for a minimum of 18 months. Refer to section 4.10 - Replanting and Ecological Enhancement;

(iii) financial contribution to cover the cost of establishment and follow-up management for a minimum of 18 months at the rate of one unit for every metre of tree removed;

(c) the financial value of the unit is established by the local government;

(d) the financial contribution is made;

(i) toward a Habitat Off-Set Scheme under the auspices of the local government;

(ii) toward the Environment Charge Fund under the auspices of the local government;

(iii) toward a replanting scheme or schedule acceptable to the local government.

4.10 Ecological Enhancement

(1) The Planning Scheme requires that development enhance ecological values, ecological features, ecological processes and habitat -as outlined above - under the Habitat Protection Overlay.

(2) There are additional requirements for enhancement in minor and major waterway buffers under the Waterways, Wetlands and Moreton Bay.

Note -

Waterway buffers described on the Waterways, Wetlands and Moreton Bay Overlay map are co-incident with many of the categories described on the Bushland Habitat Overlay Map, in particular the Enhancement Corridors and Bushland Habitat.

4.10.1 Objectives of Ecological Enhancement

(1) The primary objectives of ecological enhancement under the Habitat Protection Overlay are to -

(a) create habitat for the benefit of native plants and animals by -

(i) increasing the extent of existing bushland areas;

(ii) increasing the terrestrial and aquatic habitat opportunities available in bushland areas;

(b) create or improve existing movement pathways for native animals between habitat areas;

(c) introduce management and carry out works to improve the ecological condition or ecological processes in degraded and threatened areas;

(d) introduce management, carry out works, or undertake actions that target recovery of significant species, and in particular those that are listed as vulnerable, rare or endangered.

Note -

The objectives of ecological enhancement are generalised to cover many species of fauna and flora present or potentially present at a site. Given the great variety of fauna and flora and the state of knowledge about their habitat requirements, it is impossible to reliably address all needs.

(2) The primary objectives have many possible practical solutions. Listed below are the requirements for the most commonly employed solutions and techniques. The list is not exhaustive and may be amended by advances in knowledge and research and generally accepted best practice techniques.

(3) Create habitat by -

(a) revegetation with appropriate local species including -

(i) replanting of native vegetation;

(ii) regeneration of native vegetation;

(b) topsoil management;

(c) translocation of flora and fauna;

(d) retaining diverse habitat features;

(e) creation or enhancement of waterways, dams and wetlands.

(4) Create or improve existing movement pathways for native animals by -

(a) remove impediments to movements of native animals across the landscape;

(b) address wildlife crossing in the design of roads and access;

(c) directing native animals away from threats;

(d) using fauna friendly fences;

(e) overcoming lighting as a barrier to movement;

(f) overcoming noise as a barrier to movement;

(g) creation or enhancement of waterways and wetlands.

(5) Improve the ecological condition or ecological processes in degraded and threatened areas by-

(a) site clean up, removal and management of rubbish, wastes, and pollutants;

(b) managing domestic pets and stock;

(c) removing pest animals;

(d) removing pest plants and weeds;

(e) stabilising active erosion, in particular that associated with natural drainage lines and waterways;

(f) Improving natural water flows, restoring natural watercourse processes, or restoring natural flushing action to waterways.

(6) Recovery actions or management to address significant species in accordance with species recovery plans, conservation plans.

(7) The objectives are implemented through the ecological assessment reports and development.

Note -

The requirements for this section are described in more detailed in following parts of this policy.

4.11 Revegetation with Locally Appropriate Native Plants

4.11.1 Specifications for Replanting of Native Vegetation

(1) Replanting involves planting seedlings in the ground and active management to nurture them through the first few years until they are well established.

(2) Regeneration involves active management to encourage regrowth of native plants from the seedbank and rootstock that exist in the soil.

(3) In comparing the two methods -

(a) regeneration is usually far least expensive and provides established cover in a shorter period of time;

(b) regeneration can be harnessed to reduce, or sometimes replace the need to replant with seedlings, provided the resulting vegetation community grows more quickly or to a better standard than that which would have been achieved by planting of seedlings.

(4) Species selection for replanting is to be in accordance with -

(a) the local vegetation association detailed in Redland City Council's *Vegetation Enhancement Strategy*, and on site observations. The *Vegetation Enhancement Strategy* can be obtained from the Council's web site at http://www.redland.qld.gov.au by entering "Vegetation Enhancement Strategy" in Search.

(b) site specific requirements at a level of detail not covered in the generalised approach in (a).

(5) Planting requirements -

(a) the '*Revegetation Standard: Best Practise in Basic Revegetation Projects'* provides background and assistance with replanting projects and is available from the Council's Environmental Education Unit;

(b) unless otherwise required, the proportion of each vegetation layer among the numbers of plants used and species chosen is -

(i) 30 percent canopy (tree) layer;

(ii) 40 percent shrub layer;

(iii) 30 percent ground cover layer;

(c) acceptable targets for rehabilitation are no less than 80 percent success rate following a comprehensive planting, monitoring and maintenance schedule;

(d) the cleared area are revegetated using locally native species;

(e) the plant density in revegetation areas should be at least 1 plant/4m^2 to simulate natural regeneration densities and provide a dense buffer;

(f) there may be additional species and plants regenerated through the soil seed bank and the seed found in the cleared, mulched material;

(g) plants should not be placed within 3 metres of property boundaries and kept a safe distance away from built structures, being minimum of ten metres;

(h) replanting is to accommodate the requirements of the wader birds, particularly in relation to their need for clear lines of sight;

(i) one fertilizer tablet should be placed in each planting hole at the time of planting. The plants should be watered in at planting and then followed up one week, 2 weeks, 3 weeks and then one month later depending on weather conditions.

(6) After planting management requirements -

(a) planted areas are mulched with existing material already available on-site, after shredding, before using mulch from another source. Stockpiled vegetation should be mulched on site and spread in the cleared area and along the perimeter of the area. Should additional mulch be required, it is recommended that the mulch be enhanced using forest mulch to a depth of 100mm, it should be free of exotic plant material such as camphor laurel and groundsel that could regenerate and invade cleared areas.

(b) weed management on site should be addressed in terms of declared and environmental weeds. Weed management must be ongoing throughout the monitoring and maintenance period. The weed management program is required to remove the weeds, stabilise the soil with mulch and subsequently replant using native species.

(c) a plant maintenance schedule is followed to assist in a successful revegetation program. Unless otherwise required, the following program for local government to inspect the revegetation is followed -

(i) after the initial planting stage;

(ii) six months after planting;

(iii) nine months after planting;

(iv) twelve months after planting;

(d) a performance bond is required to ensure compliance with the revegetation plan. The level of the bond is calculated to be the costs associated with reinstating the land if the local government were required to carry out the work and on going maintenance of the land. The life of the contract is twelve (12) months which commences once the initial planting inspection has been carried out and the performance bond has been lodged with the local government.

(e) half of the bond will be released six (6) months after the initial planting subject to an inspection by local government Environmental Planning Officers. A further amount will be released following the nine month inspection and the balance will be released following the final site inspection at twelve months and subject to the success of the revegetation works.

4.11.2 Specifications for Regeneration of Native Vegetation

(1) Where the Habitat Protection Overlay, or other parts of the Planning Scheme require an ecological assessment report, this report will describe -

(a) the regeneration that is occurring on the site;

(b) the vegetation communities that existed prior to disturbance;

(c) an analysis of the potential for regeneration of native plants from the seedbank and rootstock that exist in the soil;

(d) requirements for active management to encourage regeneration of native plants.

4.11.3 Specifications for Topsoil Management

(1) Topsoil contains important seedbank and plant regeneration material that may be used for regeneration at low cost following its removal from construction areas.

(2) Topsoil may be stockpiled on site and later spread in cleared, degraded or bare areas in accordance with the ecological assessment report, or as determined through site assessment, to encourage regeneration of native plants.

4.11.4 Specifications for Translocation of Flora and Fauna

(1) For fauna management -

(a) at the operational works stage, and at least 14 days before commencement of any vegetation removal, dewatering or earthworks, the developer appoints an accredited wildlife spotter to examine the site for presence of fauna, and to supervise clearing operations;

(b) wildlife habitat includes trees whether living, dead or fallen, other living vegetation, piles of discarded vegetation, boulders, disturbed ground surfaces and aquatic feature such as dams and waterways;

(c) prior to the pre-start meeting, the spotter should provide the local government with a plan indicating the broad range of fauna expected on the site, the proposed method of operation, and any expected constraints;

(d) during clearing operations, the clearing contractor -

(i) liaises with the on-site spotter;

(ii) ensures that each tree or other feature identified by the spotter as being a risk to wildlife if felled, disturbed or dewatered, is not damaged or disturbed until the spotter advises that it is appropriate to do so;

(e) before commencement of and during clearing operations, it is the responsibility of the spotter to -

(i) be present at the site of clearing, dewatering, and other operations;

(ii) identify any tree or feature with wildlife present, as well as any tree that has a crown which is intermeshed or overlapping with such a tree;

(iii) advise the contractor of the precise location of each such tree or other feature;

(f) an accredited spotter is a person or company holding a current Rehabilitation Permit issued by the Environmental Protection Agency under Section 275(d) of the *Nature Conservation Regulation 1994*. All native fauna are protected under the *Nature Conservation Act 1992*;

(g) before seeking a pre-start meeting at the operational works stage, the applicant must provide a complete copy of the accredited spotter's current Rehabilitation Permit;

(h) operational works will not be permitted to commence until Council has sighted this permit;

(i) the spotter should attend the pre-start meeting if available;

(j) if the applicant cannot locate persons or companies holding Rehabilitation Permits, advice should be sought from Queensland Parks and Wildlife Service at Daisy Hill on 3299 1032.

(2) Flora translocation -

(a) prior to any clearing of vegetation, those trees to be removed are usually tagged and approved by the local government to ensure minimal disturbance to the existing native vegetation;

(b) at this stage, the local government may also tag any significant understorey species identified in the ecological assessment report, or otherwise identified, for translocation prior to clearing operations commencing.

4.11.5 Specifications for Retaining Diverse Habitat Features

(1) Habitat refers to a range of fauna and flora and may include a wide range of natural features that typically occur in natural bush, such as rocks, logs, uneven ground, understorey shrubs and ground covers, overhangs, puddles, banks, gullies, sand bars, debris and log piles left by floodwaters. In general, it is important to retain these features in conservation, open space or covenant areas, and outside of building envelopes on allotments.

(2) Where the Habitat Protection Overlay, or other parts of the Planning Scheme, require an ecological assessment report, this report will describe -

(a) the regeneration habitat features occurring on the site;

(b) requirements for retaining habitat features.

4.12 Creating or Improving Movement Pathways for Native Animals

4.12.1 Directing Native Animals Away from Threats

(1) The design and siting of development -

(a) addresses the safe movement of native animals through the development site;

(b) directs native animals away from those parts of uses and development that potentially cause harm to them.

(2) These threats may arise from a variety of sources including farming machinery, industrial machinery, swimming pools, guard dogs, road traffic, lighting, security fencing, domestic animals, noise and deep steep-sided drains.

(3) The ecological assessment report shows how native animals will be protected from these threats including by -

(a) design that avoids native animals coming into contact with threats;

(b) design that provides ways for native animals to move safely away from the threats;

(c) design that modifies the threat so that it's potential to harm is substantially reduced.

4.12.2 Design of Roads and Accessways to Address Wildlife Movements

(1) In the Redland City design of roads that addresses the movement of macropods, koala or possums is considered (as a surrogate) to address all wildlife.

(2) Specific design requirements in relation to existing roads include -

(a) addressing and incorporating the requirements of the *Draft Action Plan to Reduce Koala Hits from Vehicles in Redland Shire*, including -

(i) the general recommendations relating to road treatments for the precinct in which the development is located;

(ii) specific recommendations for road treatment by location in the precinct in which the development is located covering use of -

a. fauna exclusion fencing;

b. fauna "funnelling" fences or other structures;

c. underpasses;

d. culvert upgrades or retrofits;

e. proposed overpass structures;

f. proposed underpass structures;

g. lighting;

h. strategic treatment locations;

i. structures which are designed to encourage use by target fauna which have inherent aversity to traversing particular environments. For example, various species will not cross open spaces, confined spaces, narrow spaces, lighted or dark spaces.

(3) Specific design requirements in relation to new roads and access ways internal to developments include -

(a) applying the approach and recommendations the *Draft Action Plan to Reduce Koala Hits from Vehicles in Redland Shire*;

(b) applying the recommendations of *Fauna Sensitive Road Design Volume 1 Past and Existing Practices,* which is available from the Queensland Department of Main Roads, including use of the following measures -

(i) use of dry underpass passages of sufficient dimensions to accommodate wildlife (setback of bridge abutments from watercourses);

(ii) use of large pipe or small box culvert to accommodate fauna;

(iii) revegetation of the entrances to culverts to provide habitat close to culverts and cover for animals entering or exiting;

(iv) provision of refuge poles for koalas, possums and gliders entering or exiting;

(v) provision of wildlife fencing on both sides of roads to direct animals to culverts.

4.12.3 Fauna Friendly Fences

(1) Fences are one of the major obstacles to fauna movement, especially where they are erected across habitat areas and corridors. Fences create physical barriers to fauna movement and have the potential to disrupt the feeding, migration, breeding and social patterns of fauna within that area.

(2) The objective of fauna friendly fences is to meet the requirements for property boundary definition, security, privacy and the containment of livestock, in a manner that does not inhibit the movement of native animals between properties.

(3) This objective may sometimes be achieved without building a fence. For example -

(a) Property Definition - A constructed fence may not be necessary to define a property boundary. Consideration should be given to garden edges or low wooden posts to subtly define boundaries exposed to the public. Where this is not possible, the old rural style fence of plain wire strands and wooden posts allows for the uninhibited movement of native fauna while defining boundaries;

(b) Privacy - The privacy of a property can be enhanced through the use of vegetation. A combination of native trees, shrubs and ground covers can effectively screen areas while enhancing the amenity and habitat value of the area. If the alignment of the property were such that privacy is a great concern, a more solid fence with a 30cm gap at the bottom would be considered Fauna Friendly;

(c) Existing fences - The movement of animals through existing fences can be improved by planting a variety of native trees and shrubs along the fence line, possibly either side of fence line as a continuous link, which fauna can use to climb over the fence until such time that a Fauna Friendly Fence can be erected. Sections of the fencing could also be removed, such as the lowest strand wire, and replanted to integrate the fence and vegetation. Alternatively if climbing animals are the prime consideration then poles or other structures attached to the fence can provide adequate grip for a native animal to climb over.

(4) Given the vast variety in animal size, shape and methods of mobility, no single fence design can be classed as friendly to all fauna. A fence that is friendly to one species of native animal is not necessarily friendly to all. In the Redland City a fence is considered to be fauna friendly if it does not inhibit the movement of a macropods, koala or possums.

(5) In urban areas outside of the Habitat Protection Overlay the Planning Scheme requires fences to be climbable by koalas. Where this is the case then the fence does not have to cater for all other native animals.

(6) An ecological assessment report shows -

(a) the location of existing fences, including existing fences on common boundaries with properties which are not the subject of the development application;

(b) where fences will be erected;

(c) where fauna friendly design is to be incorporated into fencing.

(7) A fauna friendly fence is designed so that -

(a) it has either -

(i) A 30cm gap between ground level and the first rail or strand, with spacing above this level is at the owner's discretion; or

(ii) A series of 30cm gaps between the rails or strands, with the first gap being no higher than 30cm above ground level; or

(iii) Box wire mesh, squares of no less than 10cm may be used provided that there is a 30cm gap between the ground level and the mesh, and provided the fence is not more than 1.2 metres in height;

(b) barbed wire is kept to a minimum and used only where essential for separation and management of stock. Where barbs are used consider short barbs and the use of bunting and reflective tags to increase visibility;

(c) electric fences are kept to a minimum and used only where essential for separation and management of stock.

4.12.4 Overcoming Noise as a Barrier to Wildlife Movement

(1) Noise is a major obstacle to fauna movement. Noises, especially at night, have the potential to disrupt native animals during the feeding, migration, breeding and social interaction, all of which may have negative impact on the long term survival of species.

(2) The objective is to minimise the noise directed into habitat areas or across movement pathways.

(3) An ecological assessment report shows -

(a) areas where noise levels are an issue;

(b) the location of existing noise sources;

(c) the location of new potential noise sources;

(d) the location of noise measurement points;

(e) where design has incorporated noise abatement.

(4) Development is designed so that it does not generate noise within or at the edge of an enhancement corridor, bushland habitat or marine habitat measured as the $L_{A\ max,adj.\ T}$ parameter as defined in the *Noise Measurement Manual* (Environmental Protection Agency, 2000), of greater than -

(a) 5dB(A) above background noise level between 5am and 7pm;

(b) 3dB(A) above background noise level between 7pm and 5am.

Note -

Refer to Planning Scheme Policy 5 - Environmental Emissions in reference to implementing noise attenuation barriers, which states that barriers must not server movements of native animals

4.12.5 Overcoming Lighting as a Barrier to Wildlife Movement

(1) Artificial lighting is a major obstacle to fauna movement. Artificial light, especially at night, has the potential to disrupt native animals during the feeding, migration, breeding and social interaction – all of which may have negative impact on the long term survival of species.

(2) The objective is to minimise the artificial light directed into habitat areas or across movement pathways.

(3) An ecological assessment report shows -

(a) areas where light levels are an issue;

(b) the location of existing light sources;

(c) the location of new potential light sources;

(d) the location of light measurement points;

(e) where design has incorporated light abatement.

(4) Development is designed so that the vertical or horizontal illumination resulting from direct, reflected or other incidental light emanating from the development does not exceed 8 lux when measured at any point 1.5 metres at or above ground level outside the boundary of an development envelope where one exists or into bushland areas in other circumstances.

4.13 Improve Ecological Condition or Processes in Degraded and Threatened Areas

4.13.1 Site Cleanup and Waste Management

(1) Hazards and wastes are removed from the development site, with particular attention paid to the future public access areas, such as open space and conservation areas. This includes -

(a) any wastes as defined in the *Environmental Protection Act 1994*;

(b) machinery, fencing, and equipment left over from past uses and practices, especially that from farming, nursery, horticultural, light industrial, mechanical and manufacturing activities;

(c) items of rubbish and litter.

4.13.2 Controlling Domestic Pets and Stock

(1) The significant issue for management is to ensure that domestic pets, especially dogs and cats, and stock do not enter wildlife habitat areas, movement corridors and links. The Habitat Protection Overlay identifies the location of these wildlife areas.

(2) It is important to realise that the presence of a dog or cat alone does not deter native fauna from entering a property and making what may be a fatal mistake in doing so. Similarly, pets will and do pursue native wildlife deep into habitat areas causing stress and predation.

(3) The role of the ecological assessment report is to describe -

(a) the critical boundaries between wildlife habitat, and movement corridors and residential, commercial or industrial areas, where pets are a significant risk to wildlife;

(b) where the design and siting of development has incorporated measures to control domestic pets and stock.

(4) Development design and siting can protect native wildlife by -

(a) confining pets, dogs and cats, to an area in the immediate vicinity of the house or within a development envelope;

(b) using fencing erected around the house or development envelope to provide room for dogs to move near the house for added safety and security, and allow fauna to move freely through the remainder of the property;

(c) using fauna proof fencing to separate dogs from other wildlife.

Note -

A fauna proof fence is for example a solid, vertical, 1800mm high fence, free of overhanging vegetation. Most fencing allows some fauna movement. Even chain wire allows small animals to move through and can be climbed by koalas.

4.13.3 Controlling Pest Animals

(1) The ecological assessment report includes a fauna survey of the development site that records the presence of all animals listed as pests in the *Redland Shire Pest Management Plan*.

(2) If there is clear evidence that a pest species identified on the site has a resident population that depends on the site for basic needs including but not restricted to shelter or food then the developer must with advice from the local governments Animal Management Unit take reasonable action to manage the pest population according to the control objective identified in the *Redland Shire Pest Management Plan*.

(3) Where approvals for development could result in the potential for more dogs, the local government will seek to amend it's local laws relating to control of animals to exclude dogs from areas within H3 parts of sites covered by the Habitat Protection Overlay.

(4) Where the lot contains or is adjacent a roosting site for wader birds, proposals for fencing to exclude dogs and stock from disturbing the wader birds.

4.13.4 Removing Weeds and Pest Plants

(1) When developing a Pest Management Plan, it is essential for weeds and pest animals to be prioritised according to their declaration status, impact on the local environment, and the potential for success in the implementation of control measures. The LGAPMP should include objectives, key activities, and criteria for determining success.

(2) Should also address -

(a) preventing the introduction or spread of pests;

(b) reducing the numbers or distribution of pests;

(c) managing adverse impacts of the pests;

(d) integrating management of the pests with other natural resource management activities;

(e) the ecological assessment report should also demonstrate how mulching and other activities to control weeds would not contain non-native seeds or plant parts that can germinate or grow.

(3) All Contractors are required to manage the supply or transport of declared plant material to avoid spreading weeds. Contractors must ensure that reasonable steps are taken to prevent the spread of any declared weed via a contaminated vehicle, machinery and equipment. DNR&M wash down guidelines are available at: http://www.nrm.qld.gov.au/pests/weedseed/vehicle_machinery.html

(4) The description of these weeds and the various methods for control can be found on the Queensland Government Department of Natural Resources and Mines Internet site at http://www.nrm.qld.gov.au/...

(5) In addition, the local government's Land Management Team has a program of inspections of private land for weeds. This Team may be able to offer information about previous weeds found on the site and when weed control might best take place. They can be contacted on 3829 8588 or 3829 8625.

4.13.5 Stabilise Active Erosion

(1) The requirements for rehabilitating areas affected by erosion are set out in the Planning Scheme Policy 14 - Waterways, Wetlands and Moreton Bay and include -

(a) re-profiling and stabilisation of the soil;

(b) follow up measures, such as replanting, use of geotextiles, rock gabion, to control erosive mechanisms;

(c) safeguards to minimise the ecological impacts of works, machinery, in drainage lines and waterways;

(d) within an enhancement corridor, marine habitat or bushland habitat, the rehabilitation is to include recreation of habitat including rills and riffles, snags, stream bed rocks and overhangs;

(e) on-going management of this to ensure successful rehabilitation of areas affected by erosion.

(2) An ecological assessment report shows -

(a) areas where erosion is an issue;

(b) where design has incorporated management of erosion;

(c) the design and siting of rehabilitation and stabilization works.

(3) The above requirements are general. Specific requirements for each development site are determined on a case by case basis.

4.14 Recovery of Significant Species

(1) Where the Habitat Protection Overlay, or other parts of the Planning Scheme require an ecological assessment report, this report will describe -

(a) 'at risk', rare, vulnerable, endangered or significant species occurring on the site;

(b) any relevant species, ecosystem or fauna recovery, conservation or management plans or strategies;

(c) requirements for active management at the development site in accordance with these plans.

4.15 Bibliography

Remnant and Non Remnant Vegetation of Redland Shire, 2001, conducted by Land Assessment Management and Rehabilitation P/L and Land Resource Assessment and Management P/L

Biodiversity Assessment and Mapping Methodology, 2002, Environmental Protection Agency, Biodiversity Planning Unit, Version 2.1 July 2002.

Common Nature Conservation Classification System (CNCCS), 2001, Chenoweth Environmental Planning & Landscape Architecture P/L for Western Regional Organisation of Councils (WesROC), September 2001.

4.16 Glossary

Biodiversity	The variety of all life forms: the different plants, animals and micro-organisms, the genes they contain and the ecosystems they form. It is a concept that emphasises the inter-relatedness of the biological world. It is often considered at three levels: genetic diversity, species diversity and ecosystem diversity
Bioregion	Based on broad landscape patterns that reflect the major structural geologies and climate as well as major changes in floristic and faunistic assemblages
Conservation Status	The nature conservation ranking ascribed to a species or area of land (or its sub-components) under local, state or federal legislation or through recognised regional planning initiatives or through a recognised classification system
Diversity	The number (richness) of different flora and/or fauna communities or species occurring in a given area
Ecological Community	A group of flora and/or fauna populations interacting with each other in a systematic way
Ecological Connectivity	The extent to which land, water, airspace and/or vegetation is connected so as to facilitate the movement of fauna, flora, nutrients and energy
Ecological Corridor	An area of land and/or water, including areas above and below ground, which: functions to allow wildlife movement between habitat areas; provides wildlife refuges and habitat; provides habitat connectivity; supports the maintenance of biodiversity by providing connectivity; or supports the maintenance of ecological processes by providing connectivity
Ecological Feature	Any feature which forms a component of the ecology of an area
Ecological Processes	The physical and chemical processes which underpin the ecology of an area, including the hydrological and riparian processes of wetlands, waterways and coasts; the successional, plant dispersal, recruitment and fire regime processes of terrestrial and aquatic vegetation communities; soil formation, stabilisation, erosion and deposition; fauna and flora population dynamic
Ecological Quality (naturalness)	Extent to which an area of habitat supports the full range of native flora and/or fauna species known to occur in that habitat type
Ecological Representativeness	Extent to which a site (or its sub-components) contributes to the conservation of representative samples of the different flora and fauna habitats occurring on a local, regional or national scale
Ecosystem	A community of organisms interacting with one another and the environment in which they live
Ecotone	A region of transition between two plant communities, characterised by a transition between the floristic components of the communities (a floristic ecotone), and/or between the structures of the communities (a structural ecotone)
Edge Effects	Effects occurring at or near the boundary between different landscape or habitat types, including changed microclimatic conditions, increased exposure to wind and light (natural and artificial), changes in the water regime, increased predation, displacement of some species by more aggressive species including weeds, domestic animals and edge specialists, and changes in vegetation composition and/or structure reduction in habitat from lawns and other development-related buffer zones
Riparian (vegetation)	Vegetation situated on or associated with the banks of a waterway
Species	A group of plants, animals or micro-organisms that have a high degree of similarity and generally can interbreed only among themselves
Stag	A standing dead tree, often an emergent, above the surrounding vegetation canopy
Viability	The capacity of an ecosystem, flora or fauna community, species population or supporting ecological process (eg. energy, water or nutrient cycles) to persist in the long term without significant adverse change

Appendix 1 - Fauna Survey Needs

Fauna Group	Survey Technique	Survey Period	Survey Effort per Vegetation Community
Mammals			
Small Terrestrial	Small mammal traps	All year	10 trap nights at 3-4 consecutive nights max
	Hair tubes	All year	5-10 consecutive nights per site
	Pitfall trappings	All year	5-10 consecutive nights per site
Medium Terrestrial	Cage / B Elliot traps	All year	10 trap nights at 3-4 consecutive nights per habitat
	Hair tubes	All year	5-10 consecutive nights per site
Arboreal Mammals	B Elliot traps	All year	Trapping grid of 0.25ha sampling each major habitat, with 5 traps per grid opened for 3-4 consecutive nights
	Faecal pellet counts	All year	Min of 1 plot per 1,000m2
	Playback of recorded calls	All year	Conducted after spotlighting
	Spotlighting	All year	Walking rate 1km per hour
	Hair tubes	All year	5-10 consecutive nights per site
Microchiropteran Bats	Harp traps	All year - limited in winter	2 harp traps per broad habitat type
	Echolocation	All year - limited in winter	30 min continuous call
	Triplining	All year	2.5 hours - commencing at Dusk
	Mistnetting	All year	2.5 hours - commencing at Dusk
Megachiropteran Bats	Spotlighting and listening	All year	Target spotlighting
	Camp count	All year	As necessary and having minimal impact on camp inhabitants
	Diurnal search	All year	As necessary and having minimal impact on camp inhabitants
Birds			
Diurnal Birds	Formal census	For summer and winter minimum, optimal is seasonal	0.25ha sampling plot per 20 mins / habitat
Nocturnal Birds	Formal Census	For summer and winter minimum, optimal is seasonal	One point census per 0.25ha
	Playback of recorded calls	For summer and winter minimum, optimal is seasonal	
Reptiles			
Diurnal searches	Habitat searches	Summer and winter after rains	0.25ha search per hour on 2 separate days
Nocturnal searches	Spotlight searches	Summer and winter after rains	Walking rate 1km per hour on 2 separate nights
Specific habitats	Diurnal + Nocturnal searches	Summer and winter after rains	One hour diurnal / one hour nocturnal
Optional	Pitfall trappings	Summer and winter after rains	
Amphibians			
Diurnal searches	Systematic searches	Sep-Mar	0.25ha per hour or per habitat

Fauna Group	Survey Technique	Survey Period	Survey Effort per Vegetation Community
Nocturnal searches	Spotlight searches	Sep-Mar	30min on 2 separate nights
	Playback or recorded calls	Sep-Mar	Once of each separate night
	Specific habitat searches	Sep-Mar	20min per 50m of waterbody edge
Optional	Pitfall trappings	Sep-Mar	

Appendix 2 - Fauna and Flora List

The local government considers these environmental values to be of particular significance. These are plants that have been recorded in the local government area, but this list does not preclude other plants that may occur in Redlands that have not been recorded to date.

Table 1 - Rare, Vulnerable and Endangered Native Plants

Scientific Name	Common Name	Comments
Endangered Species		
Corchorus cunninghamii	Native jute or Cunninghams jute	One population Mt Cotton
Endiandra flovdii - could possibly occur here		No recording - occurs on rainforest edge Gold Coast hinterland
Olearia hygrophilla		NSI in sedge wetland
Phaius australis	A swamp orchid	NSI, Russell, Macleay Islands, in wetlands, isolated specimens at Hilliards Ck, Coochiemudlo Island
Phaius bernavsli	Golden swamp orchid	Possible colour variant of P australis but still classified as distinct species - NSI only in wetlands
Phaius tancarvilleae	Swamp orchid	Possibly NSI but often incorrect identification of P australis P
Vulnerable Species		
Acacia baueri subsp baueri		Few specimens on NSI - waterlogged sands in coastal health
Acacia fimbriata var perangusta	Eprapah wattle	Once vulnerable now considered common. Common throughout Redland City along creeks and damp areas in open forest especially where disturbance has occurred
Amorphospermum whitei		Recorded Tingalpa Ck Mt Cotton could possibly occur here
Caustis blakei subsp macrantha	Foxtails	NSI in coastal health
Halloragis exaltata		Recorded Ormiston in open forest
Macadamia integrifolia	Macadamia nut	West Mt Cotton/Tingalpa Creek - few specimens only
Macadamia tetraphylla		Western and Southern slopes of Mt Cotton
Thelypteris confluens		NSI in wetland
Rare Species		
Blandfordia grandiflora		Russell Island, one specimen recorded Dunwich
Durringtonia paludosa		NSI - sedge wetlands
Eucalyptus curtisii	Brisbane mallee, Plunkett Mallee	Don and Christine Burnett Reserve
Melaleuca tamariscina subsp irbyane		No recordings although occurs on Tingalpa Ck at Ransome and Mt Cotton on Brisbane side of river. Unconfirmed recording in the past at Sheldon.
Parastilochia praevenosa		Recorded Mt Cotton

Table 2 - Rare, Vulnerable and Endangered Native Animals

Common Name	Scientific Name	NCA	EPBC
Endangered Species			
Grey-nurse shark	*Carcharias Taurus*	E	
Giant Barred Frog	*Mixophyes iteratus*	E	
Loggerhead Turtle	*Caretta caretta*	E	E
Leatherback Turtle	*Dermochelys coriacea*	E	V
Swift Parrot	*Lathamus discolour*	E	E
Southern Giant Petrel	*Macronectes giganteus*	E	E
Gould's petrel	*Pterodroma leucoptera*		E
Little Tern	*Sterna albifrons*	E	
Vulnerable Species			
Illidge's ant-blue	*Acrodipsas illidge*	V	
Richmond Birdwing Butterfly	*Ornithoptera richmondia*	V	
Pygmy Perch	*Nannoperca oxlevana*	V	E
Tusked Frog	*Adelotus brevis*	V	
Wallum Froglet	*Crinia tinnula*	V	
Wallum Rocketfrog	*Litonia freycineti*	V	
Wallum Sedgefrog	*Litonia olongburensis*	V	V
Green Turtle	*Chelonia mydas*	V	V
Flatback Turtle	*Natator depressus*	V	V
Black-breated Button Quail	*Turnix melanogaster*	V	
Glossy Black-Cockatoo	*Calyptorhynchus latham*	V	
Wandering Albatross	*Diomedea exulans*	C-(s)	V
Beach Stone-curlew	*Esacus neglectus*	V	
Powerful owl	*Ninox strenua*	V	
Red-tailed Tropicbird	*Phaethon rubricauda*	V	
Sooty albatross	*Phoebetria fusca*		V
Kermadec Petrel	*Pterodroma neglecta*		V
Painted Snipe	*Rostratula benghalensis*	V	
Dugong	*Dugong dugon*	V	
Humpback Whale	*Megaptera novaeangliae*	V	V
Koala (SE Bioregion)	*Phascolarctos cinereus*	V	
Grey-headed Flying-fox	*Pteropus poliocephalus*		V
Water Mouse (False Water Rat)	*Xeromys myoides*	V	V
Rare Species			
Cooloola Sedgefrog	*Litonia cooloolensis*	R	
Green-thighed Frog	*Litonia brevipalmata*	R	
Common Death Adder	*Acanthophis antarcticus*	R	
Stephen's Banded Snake	*Hoplocephalus stephensil*	R	
Grey Goshawk	*Accipiter novaehollandiae*	R	
Black-necked Stork	*Ephippiorhynchus asiaticus*	R	
Sooty Oystercatcher	*Haematopus fuliginosus*	R	
Eastern Curlew	*Numenius madagascariensis*	R	
Lewin's Rail	*Rallus pectoralis*	R	
Freckled Duck	*Stictonetta naevosa*	R	
Sooty Owl	*Tyto tenebricosa*	R	
Grey Falcon	*Falco hypoleucos*	R	
Square-tailed Kite	*Lophoictinia isura*	R	
Indo-pacific Hump-backed Dolphin	*Sousa chinensis*	R	
Skink	*Ophioscinsuc truncates*	R	

Table 3 - Shorebirds Recognised under Ramsar, CAMBA and JAMBA Agreements

Scientific Name	Common Name	Breeding Area	Habitat Preference in Australia
Actitis hypoleucos	Common Sandpiper	Western Europe, Eastern Russia	Wide Variety of inland and coastal wetlands - varying levels of salinity - muddy margins or rocky shores
Arenaria interpres	Ruddy Turnstone	Northern Siberia, Alaska	Wide variety of habitats - generally mudflats or rocky coastline - rarely inland waters
Calidris Acuminata	Sharp-tailed sandpiper	NE Siberia	Muddy edges of shallow fresh or brackish water. Common both on intertidal and inland waters
Calidris alba	Sanderling	High arctic regions - Alaska, Greenland, Russia	Mostly open sandy beaches
Calidris canutus	Red Knot	Nth Siberia, Alaska	Intertidal mudflats, sandflats, estuaries, sandy beaches of sheltered coasts
Calidris ferruginea	Curlew Sandpiper	Arctic Tundra	Intertidal mudflats of sheltered coastal areas, coastal lakes, estuaries, bays - occasionally inland wetlands
Calidris melanotos	Pectoral Sandpiper	N Russia, N America	Shallow fresh to saline wetlands usually coastal regions, but often inland
Calidris ruficollis	Red-necked Stint	N Siberia, Alaska	Mostly coastal sheltered inlets and estuaries with intertidal mudflats - occasionally on ocean beaches, commonly on inland lakes
Calidris subminuta	Long-toed Stint	Siberia	Terrestrial wetlands, shallow freshwater or brackish wetlands with muddy or vegetated shoreline
Calidris tenuirostris	Great Knot	N Siberia	Coastal habitats, intertidal mudflats, estuaries, lagoons and sandflats
Charadrius bicinctus	Double-banded plover	New Zealand	Littoral, estuarine and fresh or saline terrestrial wetlands, grasslands and pasture
Charadrius leschenaultia	Greater Sand Plover	Siberia	Coastal wetlands, intertidal mudflats or sandflats, sheltered sandy beaches
Charadrius mongolus	Lesser Sand Plover	Central and NE Asia	Usually coastal, estuaries and littoral environments - sandflats and mudflats
Charadrius veredus	Oriental Plover	Mongolia E China	Inland - grasslands, roost on beaches or muddy margins of terrestrial wetlands
Gallinago hardwickii	Latham's Snipe	Japan and adjacent parts of Siberia	Freshwater wetlands. Inland, upland and Coastal Plains. Soft moist ground or shallow flooded areas
Gallinago megala	Swinhoe's Snipe	Central Siberia, Mongolia	Freshwater wetlands, usually grass/sedge swamps or damp to wet grasslands
Gallinago stenura	Pin-tailed Snipe	Arctic Tundra	Freshwater wetlands, usually grass/sedge swamps or damp to wet grasslands
Glareola maldivarum	Oriental Pratincole	China, Pakistan and Indian subcontinent, Indonesia and Malay pens	Open country often near water, grassy flats and mudflats
Heteroscelus brevipes	Grey-tailed Tattler	Siberia	Sheltered coasts with reef or rock platforms or intertidal mudflats
Heteroscelus incanus	Wandering Tattler	Siberia, NW Canada	Rocky coasts - not commonly seen in Australia. East coast and islands
Limicola falcinellus	Broad-billed Sandpiper	Scandinavia, Russia	Sheltered coastal wetlands, mudflats, estuaries
Limnodromus semipalmatus	Asian Dowitcher	Siberia, N China, Russia, Mongolia	Usually intertidal sheltered coastal wetlands, mudflats, sandflats and estuaries
Limosa lapponica	Bar-tailed Godwit	Northern Russia, Scandinavia, NW Alaska	Mainly coastal, usually sheltered bays, estuaries and lagoons with large intertidal mudflats or sandflats

Scientific Name	Common Name	Breeding Area	Habitat Preference in Australia
Limosa limosa	Black-tailed Godwit	Iceland, N Atlantic, Europe, Russia and China	Mainly coastal, usually sheltered bays, estuaries and lagoons with large intertidal mudflats or sandflats. Often found inland in small numbers
Numenius madagascariensis	Eastern Curlew	Russia, NE China	Intertidal coastal mudflats, coastal lagoons, sandy spits
Numenius minutes	Little Curlew	Siberia	Coastal plains, grasslands, often recreational areas; may forage in dry habitat, but congregate at freshwater eg. Small numbers
Numenius phaeopus	Whimbrel	Siberia, Alaska	Intertidal coastal mudflats, river deltas and mangroves, occasionally sandy beaches
Phalaropus lobatus	Red-necked Phalarope	Arctic, sub Arctic, N America, Europe, Russia	Usually pelagic, occasionally coastal wetlands
Philomachus pugnax	Ruff	N Europe, Russia	Usually terrestrial wetlands with exposed mudflats at edges
Pluvialis fulva	Pacific Golden Plover	N Siberia, Alaska	Mainly coastal, beaches, mudflats and sandflats and other open areas such as recreational playing fields
Pluvialis squatarola	Grey Plover	Arctic tundras, Siberia, Alaska, Canada	Coastal, intertidal mudflats, sandflats, sandy beaches, rocky coastline
Tringa glareola	Wood Sandpiper	Eurasia, mostly Scandinavia, N China, Siberia	Freshwater wetlands
Tringa nebularia	Common Greenshank	Arctic circle, Siberia	Wide variety of inland and sheltered coastal wetlands – mudflats, saltmarshes, mangroves
Tringa stagnatilis	Marsh Sandpiper	Eastern Europe to Eastern Siberia	Coastal – Permanent or ephemeral wetlands of varying degrees of salinity, commonly inland
Tringa tetanus	Common Redshank	Western Europe	Rare but regular visitor. Not known to visit Australia in significant numbers (<200)
Xenus cinereus	Terek Sandpiper	Russia, Eastern Europe	Intertidal coastal – mainly saline mudflats, lagoons and sandbanks

Source: Draft Background Paper to the Wildlife Conservation Plan for Migratory Shorebirds 2005, Department of the Environment and Heritage, Commonwealth of Australia

Table 4 - Other Significant Native Plant Species in the Redland City

Scientific Name	Common Name	Comments
Locally Significant		
Todea barbara	King Fern	Isolated recording on NSI only
Bulbophyllum minutissimum		In mangrove areas no recent recordings – may be extinct in city
Calanthe triplicate	Christmas orchid	Along creeks – no recent recording in Redlands
Caleana major	Flying duck orchid	Coastal heath Russell and NSI – very few recent recordings
Dockrillia schoeninum	Pencil orchid	Rainforest – possibly extinct in Redlands
Dockrillia linguiforme	Tick or tongue orchid	Rainforest and along creeks esp Tingalpa Ck – threatened due to collectors
Erythrorchis cassythoides	Small climbing orchid	Open forest in rotten logs
Pseudovanilla foliata	Giant Climbing orchid	Open forest on dead trees/logsNSI
Thelymitra ixioides	Dotted sun orchid	Sedge wetlands on NSI and Russell – threatened by loss of habitat
Thelymitra nuda	Scented sun orchid	Grasslands – loss of habitat – clearing of understorey
Thelymitra pauciflora	Slender sun orchid	Grasslands – loss of habitat – clearing of understorey
Acacia myrtifolia		Only known occurrence edge of Whistling kite Swamp – Russell Island – possibly on NSI
Acacia hispidula		Only in Days Rd area Redland Bay.
Bauera capitata		Edge of sedge wetlands – only one recording NSI in pine forest opposite Brown Lake
Boronia safrolifera	Safrole boronia	Few plants on NSI
Hakea actites		Only in a couple of locations on NSI and Russell
Melaleuca thymifolia		Only a few specimens left in wetlands at Fisher St Thorneside, Coolnwynpin Cons Area and Russell Island
Oxylobium aciculiferum		Few specimens only at Sheldon near Summit St
Platylobium formosum	Flat pea	Historical recordings – now extinct in city?
Prostanthera ovalifolia	Mint bush	Few specimens along Tingalpa Ck at Sheldon
Pultenaea cunninghamii		Historical recording – now extinct in city?
Hibbertia dentata		One recording – rainforest Mt Cotton
Acacia bakeri		One recording – Mt Cotton
Acmena hemilampra	Broad-leafed lilypilly	Uncommon in rainforest along some creeks in city
Acronychia imperforata		Few specimens in littoral rainforest NSI, Macleay
Acronychia pauciflora	Few flowered aspen	Western and Southern slopes of Mt Cotton
Ailanthus triphysa	White bean	Western and Southern slopes of Mt Cotton
Alectryon tomentosus	Hairy birds eye	Western and Southern slopes of Mt Cotton
Argyrodendron trifoliatum	White booyong	Western and Southern slopes of Mt Cotton
Arytera divaricate	Coogera	Western and Southern slopes of Mt Cotton
Arytera foveolata	Pitted coogera	Western and Southern slopes of Mt Cotton
Australorchis monophylla	Lily of the valley	Western and Southern slopes of Mt Cotton
Baloghia lucida	Scrub bloodwood	Few specimens in Mt Cotton/Upper Tingalpa catchment
Beilschmiedia elliptica	Brown walnut	Few specimens in Mt Cotton/Upper Tingalpa catchment
Beilschmiedia obtusifolia	Hard bolly gum	Few specimens in Mt Cotton/Upper Tingalpa catchment
Canthium coprosmoides		Few specimens in Mt Cotton/Upper Tingalpa catchment
Capparis arborea	Native pomegranate	Few specimens in Mt Cotton/Upper Tingalpa catchment
Capparis sarmentosa	Scrambling caper	Western and Southern slopes of Mt Cotton
Castanospermum australe	Black bean	Few specimens in Mt Cotton/Upper Tingalpa catchment
Cayratia eurynema	Slender grape	Western and Southern slopes of Mt Cotton
Clayoxylon australe	Brittle wood	Few specimens in Mt Cotton/Upper Tingalpa catchment
Cleistanthus cunninghamii		Western and Southern slopes of Mt Cotton
Clerodendron floribundum	Lolly bush	Few specimens in Mt Cotton/Upper Tingalpa catchment
Croton acronychioides	Thick leafed croton	Western and Southern slopes of Mt Cotton
Croton insulare	Qld cascarilla bark	Few specimens in Mt Cotton/Upper Tingalpa catchment
Cryptocarya glaucesens	Jackwood	Few specimens in Mt Cotton/Upper Tingalpa catchment
Cryptocarya obovata		Few specimens in Mt Cotton/Upper Tingalpa catchment
Cryptocarya macdonaldii		Few specimens in Mt Cotton/Upper Tingalpa catchment
Cryptocarya sclerophylla	Totem pole tree	Western and Southern slopes of Mt Cotton
Cryptocarya triplinervis		Few specimens in Mt Cotton/Upper Tingalpa catchment
Cupaniopsis parvifolia	Small leafed tuckeroo	Western and Southern slopes of Mt Cotton
Cyanthillium cinerium		Western and Southern slopes of Mt Cotton

Scientific Name	Common Name	Comments
Cyclophyllum coprosmoides	Coastal canthium	Western and Southern slopes of Mt Cotton
Cyclophyllum longipetallum	Coastal coffee	Western and Southern slopes of Mt Cotton
Diploglottis cunnighamii	Native tamarind	Few specimens in Mt Cotton/Upper Tingalpa catchment
Drypetes deplanchei	Yellow tulip	Western and Southern slopes of Mt Cotton
Dysoxylon rufum		Few specimens in Mt Cotton/Upper Tingalpa catchment
Elaeocarpus eumundi		Tingalpa Creek
Elaeocarpus grandis	Blue quandong	Few specimens in Mt Cotton/Upper Tingalpa catchment
Ellatostachys nervosa		Few specimens in Mt Cotton/Upper Tingalpa catchment
Endiandra discolour	Rose walnut	Few specimens in Mt Cotton/Upper Tingalpa catchment
Endiandra sieberi	Corkwood	Few specimens at Clay Gully and possibly NSI
Eucalyptus tesselaris	Moreton Bay Ash	Few specimens at Victoria Point
Euroschinus falcata	Ribbonwood	Few specimens in Mt Cotton/Upper Tingalpa catchment
Ficus virens	White fig	2 specimens on top of Mt Cotton
Flindersia schottiana	Bumpy ash	Few specimens in Mt Cotton/Upper Tingalpa catchment
Flindersia xanthostyla	Yellow wood	Few specimens in Mt Cotton/Upper Tingalpa catchment
Gossia bidwillii	Python tree	Western and Southern slopes of Mt Cotton
Gossia punctata	Myrtle	Western and Southern slopes of Mt Cotton
Gmelina leichardtii	White beech	Few specimens along Tingalpa Ck
Hippocrates barbata	Knot vine	Western and Southern slopes of Mt Cotton
Hymenosporum flavum	Native frangipanni	Few specimens in Mt Cotton/Upper Tingalpa catchment
Ixora beckleri	Brown coffeewood	Western and Southern slopes of Mt Cotton
Litsea leefeana	Brown bolly gum	Few specimens in Mt Cotton/Upper Tingalpa catchment
Litsea reticulata	Bolly gum	Few specimens in Mt Cotton/Upper Tingalpa catchment
Livistonia australis	Cabbage tree palm	Few specimens NSI
Mallotus discolor		Few specimens in Mt Cotton/Upper Tingalpa catchment
Morinda canthoides	Morinda vine	Western and Southern slopes of Mt Cotton
Pararchidendron pruinosum	Snow wood	Western and Southern slopes of Mt Cotton
Parsonsia lanceolata	Scrub silk pod vine	Western and Southern slopes of Mt Cotton
Parsonsia ventricosa	Hairy silk pod vine	Western and Southern slopes of Mt Cotton
Pipterus argenteus	Native mulberry	Few specimens in Mt Cotton/Upper Tingalpa catchment
Pittosporum mulitflorum	Orange thorn	Western and Southern slopes of Mt Cotton
Polyalthia nitidissima		Cow Bay, Macleay Island and Mt Cotton
Polyscias murrayi		Only one recording Mt Cotton
Pouteria australis	Black apple	Western and Southern slopes of Mt Cotton
Pouteria myrsinifolia	Hairy Coondoo	Western and Southern slopes of Mt Cotton
Pouteria pohlmaniana	Yellow boxwood	Western and Southern slopes of Mt Cotton
Sarcomelicope simplicifolia	Bauerella	Western and Southern slopes of Mt Cotton
Schizomeria ovata	White cherry	Few specimens in Mt Cotton/Upper Tingalpa catchment
Sloana woolsii	Yellow carrabeen	Few specimens in Mt Cotton/Upper Tingalpa catchment
Sophora tomentosa		One recording – Cow Bay, Macleay Island
Sterculia quadrifida	Peanut tree	Few specimens in Mt Cotton/Upper Tingalpa catchment
Streblus brunonianus	Whalebone tree	Western and Southern slopes of Mt Cotton
Synoum glandulosum	Scentless rosewood	Few specimens in Mt Cotton/Upper Tingalpa catchment
Syzygium leuhmanii	Small leafed lilypilly	Few specimens in Mt Cotton/Upper Tingalpa catchment
Tinospora smilacina	Tinospora	Western and Southern slopes of Mt Cotton
Toechima tenax		Few specimens in Mt Cotton/Upper Tingalpa catchment
Xylomelum salicinum	Woody pear	Few specimens on Russell and possibly NSI
Tidal Species		
Aegicerus corniculatum	River Mangrove	Protected under the Fisheries Act
Aviecennia marina var australasica	Grey mangrove	Protected under the Fisheries Act
Bruguiera gymnorhiza	Orange mangrove	Protected under the Fisheries Act
Ceriops tagal var australis	Yellow mangrove	Protected under the Fisheries Act
Exocoecaria agallocha	Milky mangrove	Protected under the Fisheries Act
Lumnitzera racemosa	Black mangrove	Protected under the Fisheries Act
Rhizophora stylosa	Red mangrove	Protected under the Fisheries Act
Sporobolus virginicus	Saltwater couch	Protected under the Fisheries Act
Casuarina glauca	Swamp she-oak	Protected under the Fisheries Act when growing in tidal zones
Hibiscus tileaceus	Cotton tree	Protected under the Fisheries Act when growing in tidal zones

Scientific Name	Common Name	Comments
Casuarina equisitifolia	Coastal she-oak	Protected under the Fisheries Act when growing in tidal zones
Melaleuca quinquenervia	Broad-leafed paper bark	Protected under the Fisheries Act when growing in tidal zones
Endangered Plants not Recorded but Could Occur in Redlands		
Endiandra floydii		No recording but could possibly occur here as it occurs on rainforest edge Gold Coast hinterland
Austromyrtus gonoclada	Angle stemmed myrtle	No recording but could possibly occur here: 7 plants planted as part of recovery program
Ricinocarpos speciosus		No recording but could possibly occur here - occurs in wider region- damp areas open forest near rainforest
Sophora fraseri		No recording but could possibly occur here – widespread in region
Zieria collina		No recording but could possibly occur here – found Mt Tamborine in rainforest
Gompholobium virgatum var emarginatum		No recording but could possibly occur here – Only recorded in wallum at Noosa

Table 5 - Other Significant Native Animal Species in the Redland City

Common Name
Iconic Species and Species Groups
Golden Swamp Wallaby
Koala
Greater Glider
Magpie Geese
Glossy Black Cockatoo
Bush Stone Curlew
Flying Fox
Shorebirds
Wallum Froglet
Green Tree Frog
Dugong
Sea Turtles
Small Dasyurids
Wrens and Finches
Insectivorous Bats
Goannas

Appendix 3 - Redland City Environmental Inventory Stage 4

4.0 Conservation Management Areas (CMAs)

(1) Large areas of Redland City have been identified in planning strategies for South East Queensland as containing bushland habitat of State, regional and local significance. These areas are a major recreational and environmental resource, important for vegetation, fauna, water supply and recreation within Redland City and South East Queensland. These planning strategies have been taken into consideration when applying a level of significance to Conservation Management Areas (CMAs). The CMAs have also had their local significance and habitat function taken into consideration, and all CMAs represent opportunities for focussing enhancement activities.

(2) The geographic distribution of the CMA categories is illustrated in the Environmental Inventory Stage 4 map available at the Council website.

(3) The CMA location codes are comprised of an alphabetical code (two letters - described below) and an individual numeric code (four numbers) which are unique identifiers and serve no other purpose.

(4) For the purpose of the Inventory and its findings, the City has been categorised and mapped into various CMAs according to the importance of bushland and tidal areas for protection, management and enhancement purposes. Four broad categories of CMA (Priority, Major, General, Enhancement) which are further subdivided according to broad ecological function classifications (Habitat, Patch, Mosaic, Corridors, Links, Tidal, and Foreshore).

4.1 Priority CMAs

(5) Priority CMAs include -

(a) bushland in natural or near natural condition that are considered of high conservation significance[6];

(b) large tracts of continuous bushland with minimum disturbance;

(c) remnant vegetation, tidal, estuarine and freshwater wetlands on the mainland coast and associated waterways and the island environments of Moreton Bay;

(d) areas ecologically significant at a regional or subregional level;

(e) all remnant vegetation;

(f) all Ramsar wetland sites;

(g) all areas of State and Regional biodiversity significance;

(h) all areas of State and Regional Conservation Significance.

(6) are further subdivided as -

(a) Priority Habitat (PH) - Large habitat areas of sufficient size and connectivity for a large proportion of ecological processes to be self sustaining, capable of withstanding disturbances and of buffering edge effects;

(b) Priority Corridors (PC) - Riparian corridors connecting areas of Priority Habitat and Priority Tidal and providing an essential corridor function for Redland City at a regional or subregional level;

(c) Priority Tidal (PT) - Contain significant tidal ecosystems of regional significance; support aquatic based flora and fauna communities; have a water quality maintenance function;

(d) Priority Patch (PP) - Bushland remnants or small patches of relatively intact natural vegetation of significant or threatened habitat; may also provide “buffer” areas;

(e) Priority Foreshore (PF) - Strips of vegetation along the foreshore that provide habitat and buffering, and that contain habitat of some regional, State or Federal significance.

[6] As defined in the Remnant Bushland of South East Queensland in the 1990s (Catterall and Kingston, 1993); the Final Joint Regional Koala Habitat Project (Pahl, 1993); the Remnant Native Vegetation Mosaics of Lands Within Redland Shire ( ); the Regional Nature Conservation Strategy (2003).

4.2 Major CMAs

(1) Major CMAs include -

(a) large areas of dense mosaic bushland frequently interspersed by small patches of clearing;

(b) areas functioning as smaller bushland habitats, corridors, links and mosaic areas;

(c) areas of high conservation significance at a local level;

(d) areas adjacent, or in close proximity to, Priority Areas;

(e) semi-isolated remnants of moderate size and fragmentation.

(2) Major CMAs are further subdivided as -

(a) Major Habitat (MH) - Have one or more of the following attributes -

(i) significant habitat areas surrounded by residential or other land uses;

(ii) bushland connected by corridors to the overall green network or habitat areas or provide a buffering function to Priority Tidal areas;

(iii) bushland which provides a catchment management function upstream of Leslie Harrison Dam;

(iv) exhibit some minor disturbance however are large enough to maintain a good habitat function;

(b) Major Corridor (MC) - Have one or more of the following attributes -

(i) riverine corridor links along waterways providing a vital ecological link within Redland City;

(ii) corridors of vegetation that extend from Priority Habitats, and are therefore likely to act as corridors for species that use the Priority Habitat. The Major Corridor is a type of extension of that Priority Habitat, and are linked to the ecological function that the Priority Habitat is serving -

(c) Major Foreshore (MF) - Narrow strips of vegetation along the foreshore providing habitat and buffer function;

(d) Major Patch (MP) - Have one or more of the following attributes -

(i) patches of isolated/semi-isolated bushland close to Priority Areas and other Major Areas supporting significant species;

(ii) fragmented/clusters of habitat remnants;

(iii) through land management and rehabilitation can form part of an overall green network;

(iv) larger and less disturbed than General Patches;

(v) attached to MC or surrounded by EH/EC and often in close proximity to PT areas.

(e) Major Link (ML) -

(i) narrow strips of continual vegetation linking Priority Areas and Major Areas;

(f) Major Mosaic (MM) -

(i) areas where small remnants/habitats form a mosaic of native vegetation with disturbed areas usually adjacent to Priority Areas, Major Habitats, Major Patches, or upstream of Leslie Harrison Dam.

4.3 General CMAs

(1) General CMAs which include -

(a) smaller patches and strips of native vegetation that provide habitat niches, stepping stones and local corridors for fauna even though they may be highly disturbed;

(b) patches and strips significant at a local level;

(c) representative areas of vegetation associations formerly more widespread throughout the region;

(d) much vegetation that is regarded as regrowth under the Common Nature Conservation Classification System.

Note -

Regrowth vegetation provides habitat for wildlife and habitat for other plants. The younger vegetation in regrowth provides long term replacement of older vegetation and contributes to the likely long term ecological viability of that area. Regrowth may also be the first of a series (or succession) of colonisation species that return to an area after disturbances regrowth can, with time and proper management, reach a state akin to that of remnant vegetation

(2) General CMAs are further subdivided as -

(a) General Habitat (GH) -

(i) disturbed bushland/habitat areas which still have value; larger than Patches; located near MH, PH and Corridor areas;

(b) General Corridor (GC) - Have one or more of the following attributes -

(i) narrow, disturbed, fragmented native riparian vegetation along waterways;

(ii) vital linkage function;

(iii) small coastal and significant minor tributaries off MCs.

(c) General Patch (GP) - Have one or more of the following attributes -

(i) scattered bushland with local habitat and amenity value;

(ii) fragmented bushland with a habitat function;

(iii) poor connectivity with other areas, however, may be near MH and MP areas;

(iv) fragmented vegetation and vegetation linkages along the edges of road reserves or along elongated driveways that are situated close to the other more densely vegetated part of the Patch;

(v) have greater disturbance than MPs;

(d) General Links (GL) - Have one or more of the following attributes -

(i) small narrow vegetated links adjoining localised and/or isolated patches of bushland to other Major/General bushland tracts/corridors;

(ii) comprise trees and native plants that link through a series of properties to create a wildlife corridor running through many properties. Examples of this are most prevalent at Thorneside where several links exist at the rear of long residential properties where there are houses situated at the front of the properties;

(e) General Mosaic (GM) -

(i) Areas where small patches of native vegetation and individual trees form a mosaic of native vegetation with highly disturbed areas. Often interspersed with houses, sheds and roads. Together, the vegetation has a fragmented appearance from the ground or from the air, but on the whole forms a mosaic of native vegetation.

4.4 Enhancement CMAs

(1) Enhancement CMAs include -

(a) Enhancement Corridors (EC) which include cleared or degraded areas -

(i) coincident with waterways that may be enhanced to create better wildlife corridors between habitats (i.e. General, Major and Priority areas) or waterway buffers and areas to allow for the changing course of waterways;

(ii) adjacent to foreshores with potential through rehabilitation to enhance and protect tidal wetland areas and coastal ecosystem;

(iii) where there may be individual trees or lines of trees which are a good focus for enhancement and may already exhibit limited corridor function;

(iv) that are a minimum of 100 metres in width.

(v) opportunities for revegetating a creek/waterway/drainage line to extend an existing corridor to link Habitat and Patch areas;

(vi) substantially cleared or degraded, often containing individual trees or lines of trees;

(vii) opportunity for potential expansion or widening of existing corridors, such as along a wet drainage line, where the enhancement is best focussed on this existing vegetation to make the most of their existing and potential linkage function;

(viii) located along main and significant minor tributaries;

(ix) should be 100 metres wide, unless there is some form of existing barrier to this width that cannot be removed. Are wider than 100 metres where the Corridor encloses some structure that limits wildlife movement or replanting;

(b) Enhancement Links (EL) which are -

(i) indicative of a best fit for an ecological connection across cleared or degraded areas that may be enhanced to create movement pathways for wildlife between habitats, such as General, Major and Priority areas;

(ii) not coincident with waterways or adjacent to foreshores;

(iii) not necessarily inclusive of individual trees or lines of trees as a focus for enhancement and may not currently exhibit an ecological linkage or corridor function;

(iv) negotiable with regard to siting and design based on the findings of ecological assessment report;

(v) opportunities for replanting to link Habitat and Patch areas. These differ from Enhancement Corridors in that they do not run along creeks/waterways/drainage lines;

(vi) substantially or totally cleared or degraded areas, often containing individual trees or lines of trees;

(vii) opportunity for potential expansion or widening of an existing link;

(viii) often located along property boundaries between existing habitats;

(ix) should be 100 metres wide, unless there is some form of existing barrier to this width that cannot be removed. Are wider than 100 metres where the Link encloses some structure (e.g. a dam) that limits wildlife movement or replanting.

(c) Enhancement Area (EA) which includes -

(i) cleared non-urban areas representing opportunities to protect, enhance and maintain freedom of wildlife movements and for limited replanting;

(ii) areas primarily cleared of vegetation for a variety of land uses;

(iii) provide reasonable freedom of movement for wildlife to vegetation in other areas in comparison to that experienced by wildlife trying to move through urban allotments, or through shopping centres, or through industrial estates;

(iv) opportunity to ensure the long-term survival of native animal populations, such as koalas, is offered by avoiding further barriers to movements of native animals, and undertaking some replanting to improve movements of native animals;

(d) Enhancement Foreshore (EF) which includes -

(i) cleared or disturbed areas adjacent to foreshores with potential to be rehabilitated to enhance and protect the coastal ecosystem particularly tidal wetland areas;

(ii) should be at least 100 metres wide from the high tide, unless there is some form of existing barrier to this width that cannot be removed. Are wider than 100 metres where the Enhancement Foreshore encloses some structure that limits wildlife movement or replanting;

(e) Enhancement Tidal (ET) which include -

(i) cleared or degraded areas that are inundated by tidal waters, and representing opportunities for rehabilitation.

Appendix 4 - Ecological Assessment Certification Report

This certification is completed by suitably qualified or experienced persons as required by the Planning Scheme Policy No. 4 - Ecological Impact. It represents the minimum requirement for a Level One ecological assessment report and is not to be used for Level Two ecological assessment or Level One ecological assessment where a full report is required.

Development Site Location -

- **The proposed development site is located at -**

  For example - Lot 3 RP 10356 111 to 112 Redland Center Road Thornlands.

- **The proposed development is described as -**

  For example - Four metre by 12 metre shed located six metres from rear of dwelling on northeast side. Paths, water tank and driveway to shed.

Site Ecological Assessment -

- **I have inspected the development site and as far as practicable the adjoining lands and determined that in regard to the site and adjoining land -**

- **The landform and geographical features and land use are described as -**

  For example - The site is gently sloping land falling from north to south and cut by a very minor drainage line running east west at the rear of the lot which is vegetated. The site is a recent park residential development lot located on past red soil horticultural land. The owner currently keeps three horses and two goats on the lot.

- **The vegetation is described as -**

  For example - There are recent regrowth trees (*E. tereticornis*) located on the eastern boundary fence and exotic plantings near the current dwelling. The only other vegetation is along the minor drainage line at the rear of the lot in excess of 100 metres from the shed site. Shed site is grassed at present with no other vegetation within 10 metres of shed.

- **The habitat value and use of the site by fauna is described as -**

  For example - Anecdotal information from the resident indicates that koalas periodically use the *E. tereticornis* for food. This is verified by old koala scratch marks on the trees and scats. Actual sightings were limited to a number of common species including rainbow lorikeets, crested pigeons, magpies, noisy miners and blue-faced honey eaters. A crested pigeon nest existed in the exotic plantings. No other nesting sites such as hollows were observed.

- **The following potential ecological impacts of the development proposal are identified -**

  For example - The construction of the shed should not alter the ecological values of this site.

- **The following avoidance, mitigation and management measures have been included in the development proposal in relation to the above listed ecological impacts -**

  For example - The siting of the shed has been done so as not to impact on the ecological values of the property.

- **The following measures are to be taken to enhance ecological values and processes at the site-**

  For example - While there are no specific enhancement plans directly related to this application the continued ecological enhancement of the site as shown by the regenerating *E. tereticornis* will continue.

I (your name) of (your business address and contact details)

certify that the above information is complete, true and correct as at the date of this report.

My qualifications and experience for completing this assessment meet the relevant requirements of the Planning Scheme Policy 4 Ecological Impact and are attached.

Signed

Dated

Disclaimer: The above information may not constitute certainty about the ecological values of the site, as the composition, behaviour and range of fauna and flora can change with time and external

influences. Observations were conducted during [season] at [times of day] over a period of [days, weeks].

(If considered relevant): The ecological values could alter from what was observed due to … (for example, seasonal migration patterns, seasonal vegetation changes such as flowering or dieback, specified regular changes in the regional environment).

this page purposely
left blank

Planning Scheme Policy 5 - Environmental Emissions

5.1 Purpose

(1) The purpose of this policy is to set out the requirements for the preparation and submission of development applications, including technical reports, for sites that have the potential to emit, or be impacted adversely from, environmental emissions such as air or noise.

5.2 Applicability

(1) This policy applies to -

(a) development that is likely to have air or noise emissions with the potential to adversely impact on the surrounding environment; or
(b) development that is a sensitive receiving environment likely to be adversely impacted by environmental emissions; or
(c) developments that are assessed against codes that specifically reference this policy; or
(d) a proposed development that has specific acceptable solutions relevant to air and noise emission impact issues.

Note -

- Where a development includes a devolved Environmentally Relevant Activity as defined under the *Environmental Protection Act 1994* (EPAct), this part of the development is assessed for environmental impacts in accordance with the EP Act and Redland City Council's Operators Compliance Guidelines.
- Also, where a development includes the requirement to obtain a Flammable and Combustible licence under the *Dangerous Goods Act 2001*, it is recommended that this application be made at the same time as the development application to ensure all issues relevant to the development are addressed in an integrated manner.

5.3 Formulating a Development Proposal

(1) A detailed and comprehensive site analysis is the foundation of any good design and is carried out as the first step. This will help to identify the constraints and opportunities of the site as well as highlight the prominent features of the surrounding environment.

(2) For many developments a report assessing the development's environmental impacts, such as air and noise, is generally required prior to any decision. Therefore, it is essential that the recommendations of these reports are carefully considered and incorporated into the design of the development proposal, and are understood by the applicant and site operator/occupier.

5.4 Pre-lodgement Meetings

(1) It is strongly recommended that applicants arrange a pre-lodgement meeting to determine if a report assessing the development's environmental impacts from air and noise is required, the matters to be covered in the report and the timing of lodgement of the report. This will assist to ensure a more streamlined process can occur once an application is lodged.

5.5 Air Quality

(1) Air pollution can impact upon health, amenity, property, the environment and economy of the City. This section of the policy provides a framework to determine air pollution impacts, and guides applicants on matters they need to address to ensure their proposal meets the air quality requirements of the relevant planning scheme codes.

(2) This policy also seeks to provide guidance to prevent or minimise exposure to air pollution in the development of sensitive receiving environments.

(3) For a development that requires impact assessment, additional information may be requested by the assessment manager and/or referral agency to assist in assessing those proposals that have potential to cause significant environmental harm.

(4) Applicants are encouraged to take opportunities to reduce air emissions through the application of waste prevention and minimisation, cleaner production and best practice environmental management. Some examples are provided in Appendix 1.

(5) Where a development cannot achieve zero emissions, all acceptable solutions to minimise emissions beyond the boundary of the site are demonstrated, including emission control technology and adequate setback distances where a sensitive receiving environment may be affected. In addition to the implementation of the most appropriate control technology, the applicant needs to address the construction, design, location, form, environmental performance and management of operations.

(6) For separation distances refer to Part 5 - Division 9 - Protection of the Poultry Industry Overlay and Part 6 - Division 16 - Intensive Agriculture Code. Part 11 - Planning Scheme Policy 11 - Rural Lands and Uses also provides details in relation to acceptable solutions for these rural type activities.

5.5.1 Air Quality Standards

(1) Air quality standards for the criteria pollutants are shown in Table 1. These standards are based on indicators and goals contained in Schedule 1 of the *Environmental Protection (Air) Policy 1997* under the *Environmental Protection Act 1994*. These standards are required to protect human health and amenity.

Table 1 - Air Quality Standards

Contaminant	Averaging period	Maximum concentration ug/m^3
Carbon Monoxide (CO)	8 hours	10,000
Nitrogen Dioxide (NO_2)	1 hour	320
	4 hours	95
	Annual	30
Sulphur dioxide (SO_2)	10 mins	700
	1 hour	570
	24 hours	100
	Annual	60
Ozone	1 hour	210
	4 hours	170
	24 hours	65
Total Suspended Particles	Annual	90
Particles as PM_{10}	24 hours	150
	Annual	50
Dustfall *	Annual	133 mg/m^2/day

Note -

* The internal EPA standard is currently not in the *Environmental Protection (Air) Policy 1997*

Table 2 - Odour Criteria

Activity	Odour level at sensitive receiving environment
Poultry farms/rural activities and other volume sources.	7OU/m^3 3 minute average, 99.5th percentile
Other activities	2OU/m^3 3 minute average, 99.5th percentile; 4OU/m^3 3 minute average, 99.9th percentile

Note -

- These levels are based on values in *Guidance Statement 47 - Assessment of Odour Impacts from New Proposals* prepared by WA EPA, March 2002.
- Odour guidelines are contentious and major facilities should seek advice from the relevant governing body.

(2) If the emissions from a proposed development include other air pollutants not listed in Table 1 - Air Quality Standards and Table 2 - Odour Criteria, ambient air quality standards set for Australian conditions will be accepted. If no suitable Australian ambient air quality standard exists, an ambient air quality standard from another country or organisation may be used with appropriate justification.

(3) Additional ambient air quality standards can be found in the *Victorian State Environment Protection Policy (Air Quality Management) 2001* and the *National Environment Protection (Air Toxics) Measure (2004),* or updated versions of these documents.

(4) The national goals are based on the recommendations of the Australian and New Zealand Environment and Conservation Council (ANZECC) and the *National Environmental Protection Measure (NEPM) for Ambient Air Quality* produced in 1998 by the National Environmental Protection Council (NEPC).

(5) The NEPC guidelines are intended for the assessment of air quality at neighbourhood locations such as at major urban residential zones and small to moderate townships. They do not provide recommendations for "peak" sites such as near roadways, mining operations or industrial plants.

Note -

Additional reference material for assessment and measurement of air quality -

- *Australian Standard 4323.2:2001 Stationary Source Emissions - Determination of Odour Concentration by Dynamic Olfactory*.
- *A procedure to assess the risk of odour nuisance from proposed developments, Draft Environmental Guideline, Queensland Environmental Protection Agency July 1999.*
- *Planning Guidelines: Separating Agricultural and Residential Land Uses. DNR, DLGP 1997.*

(6) Where the proposed development is a sensitive receiving environment located within close proximity to an existing or proposed incompatible land use, there may be a requirement to demonstrate as a minimum, that the relevant ambient air standards in Table 1 - Air Quality Standards and Table 2 - Odour Criteria will be achieved at this development site. In some instances the term "close proximity" may be referred to as the prescribed separation distance set out in a code that is either relevant to the proposed development or the nearby incompatible land use.

5.5.2 Who Should Prepare An Air Quality Report

(1) An air quality report is required for a proposed development that emits air pollutants that may have an adverse impact on air quality, because of the -

(a) volume or type of emissions to air;
(b) proximity of the development to a sensitive receiving environment.

(2) An air quality report is required where a proposed development may create a sensitive receiving environment within the trigger area of a relevant overlay code, or close to a premises that emits air pollutants that may have an adverse impact on the air quality of this receiving environment.

(3) The air quality report is prepared by a suitably qualified person who has demonstrated practical and theoretical knowledge of air quality assessments. A curriculum vitae should be provided detailing relevant experience with similar air quality assessments.

(4) The local government may require the proponent to fund a Third Party Review of the air quality report. The local government will select the Third Party Reviewer.

5.5.3 Air Quality Report

(1) An air quality report should contain enough information to adequately assess the potential air quality impact issues of the proposed development.

Note -

Development likely to emit or receive air emissions which are of a toxic or hazardous nature or emit offensive/noxious odours may be required to submit a more detailed air quality report than other developments at the discretion of the local government.

(2) A comprehensive air quality report should contain the following -

(a) A detailed site plan that shows the layout of the site including main emission sources and the surrounding environment, including local industries, sensitive receptors such as the nearest residences and schools, and topography;

(b) A detailed description of site activities. This may include such information as -
- (i) the type of emissions, such as stack, area/volume, fugitive;
- (ii) the operational parameters of all emission sources, including information such as variations to emission rates due to “peak” or “average” emissions, or upset conditions;
- (iii) a description of the processes conducted at site;
- (iv) the technology and design required to achieve Best Practice Environmental Management;

(c) A discussion of the prevailing meteorology based on on-site data where available, or the closest monitoring information representative of the proposed site. This should include wind roses and an analysis of wind characteristics that are important to the dispersion of pollutants;

(d) An estimation of emissions. Emissions can be estimated in various ways such as -
- (i) NPI handbooks on emission estimation for the relevant activity;
- (ii) USEPA AP 42 Emissions estimations handbooks;
- (iii) basing estimations on information in the Redland City Council’s Operators Compliance guidelines;
- (iv) from monitoring or stack testing of similar facilities;
- (v) industry specific Best Practice guidelines such as those for feedlots and piggeries;

(e) An assessment of the existing air quality including a description of the surrounding industry that may affect ambient air quality. Where available, air quality information from a nearby monitoring station is included. The Queensland Environmental Protection Agency has accepted the use of the 95th percentile for determining background pollution concentrations;

(f) Dispersion Modelling -
- (i) modelling provides useful information for assessing the impact of emissions to the airshed. It can provide an initial assessment of localised effects through the prediction of ground level concentrations in the immediate vicinity of the emissions. The information generated from modelling can assist in the assessment of potential impacts at the start of the development avoiding uncosted and unplanned prevention measures.
- (ii) the Ministry for the Environment in New Zealand has released a draft technical report, *Good Practice Guide for Atmospheric Dispersion Modelling*, which is a comprehensive document on the different models and their strengths and weaknesses. The NSW EPA has released *Approved Methods & Guidance for the Modelling and Assessment of Air Pollutants in New South Wales*. Both documents are informative and may be used as reference documents for any air quality modelling. The most recent or updated edition of these documents should be applied.
- (iii) in cases where modelling is undertaken, the following is considered -
  - a. selection of an appropriate atmospheric dispersion model. The Australian regulatory dispersion model Ausplume is appropriate for most air quality assessments, ranging from poultry applications to service station emissions. There are specific conditions for which Ausplume may not be the most appropriate model, such as complex terrain and shoreline fumigation. In this instance, justification for the use of an alternative model is given. For larger applications requiring more intensive modelling, liaison with the relevant administering authority with respect to model setup is recommended;

b. meteorological data is site representative across all seasons over at least one year;
c. simulated meteorological files may be used provided the data is demonstrated to be generated using appropriate methodologies and is representative of conditions of the site;
d. building wake effects are included where there is an on-site or nearby building that may impact on plume dispersion;
e. terrain effects are accounted for where terrain may affect emission impacts;
f. Ausplume defaults for model settings;
g. roughness height;
h. cumulative impacts are accounted for either in the model or in background monitoring data;
i. variation to operating conditions and worst case scenarios. Apart from the normal suite of emission data such as emission rate, temperature, exit velocity or stack dimensions, the variation in process characteristics that impact on emissions need to be considered, such as hours of operation, upset conditions, different feedstocks and fuels, and changes in process controls;
j. the grid spacing of the receptor grid is chosen so that the predicted maximum concentration is not significantly underestimated. Discrete or elevated receptors are included in the assessment in order to assess the impact where applicable;
k. pollution contours for all pollutants, and tables summarising the predicted ground-level concentrations at sensitive receptors, are included with comparisons against relevant air quality standards.

5.6 Noise Management

5.6.1 General

(1) In addressing land use and development, the location of and relationship between various land uses and the effects of land use and development, including noise management issues, are required to be considered. The *Environmental Protection (Noise) Policy 1997* (the Noise EPP) requires noise management issues to be recognised within the provisions of a planning scheme and identified environmental values to be enhanced or protected, these being qualities of the acoustic environment that are conducive to -

(a) the wellbeing of the community or a part of the community, including its social and economic amenity;
(b) the wellbeing of an individual, including the individual's opportunity to have sleep, relaxation and conversation without unreasonable interference from intrusive noise.

(2) The objective of this section of the policy is to enhance or protect acoustic environmental values of Redland City in a manner consistent with the objectives in the *Environmental Protection (Noise) Policy 1997* through -

(a) incorporating noise levels for the local area;
(b) ensuring appropriate acoustic information is obtained at the development assessment stage to assess impacts on the acoustic environmental values.

(3) This section of the policy also seeks to provide clear guidance to those seeking development approval, regarding the assessment provisions for projects which either emit noise or introduce a sensitive receiving environment with the potential to be affected by a noise emitter.

(4) Noise can be defined as unwanted sound that unreasonably intrudes into our daily activities and can cause varying degrees of nuisance and annoyance. Many sources of noise are often associated with urban development including road, air and rail transport, industrial operations, neighbourhood and recreational pursuits, and agricultural activities.

(5) Noise can affect human health and well-being. This can occur in a number of ways, including annoyance reaction, sleep disturbance, interference with communication, performance effects, effects on social behaviour, and hearing loss. If it is allowed to continue it may cause severe mental stress. It can also cause very real physical problems such as chronic exhaustion, high blood pressure and heart disease. Noise that occurs at night is more likely to disturb a community than noise that occurs during the day. Noise may contain annoying characteristics, such as -

(a) tonality - "humming" and "whining";
(b) modulation - regular changes in level or pitch such as a siren;
(c) impulsiveness - "hammering".

(6) A proposed development should not result in significant deterioration of the existing acoustic environment.

(7) The development of a sensitive receiving environment should not occur where existing noise sources would result in the acoustic environment of this new development being unreasonably compromised.

(8) Table 3 shows the subjective effects of changes in audible sound pressure levels.

Table 3 - Subjective Effects of Changes in Audible Sound Pressure

Change in Sound Pressure Level (dB)	Change in Apparent Loudness
+3 dB	Just perceptible
+5 dB	Clearly noticeable
+10 dB	Twice as loud

Reference: Bies D.A. & Hansen C.H. (1996) Engineering Noise Control Theory and Practice, Second Edition; Department of Mechanical Engineering, University of Adelaide: South Australia.

(9) Prior to lodging an application for a development an evaluation of the suitability of the proposal is conducted, including a review of the constraints and opportunities for that development. In doing this, at least the following is considered prior to finalising the proposal -

(a) location;
(b) interaction with the surrounding environment, both internal and external to the development.

(10) In particular, the various types of land uses such as nearest noise emitters and/or sensitive receiving environments are identified in the planning process. Prior to making an assessment an initial 'scoping' assessment is considered to determine the background noise levels of the surrounding environment. This assessment should be representative of the operation of existing or proposed noise generating activities. Information from this assessment would be valuable in determining the appropriateness of the development for that location.

(11) When considering the likely impact of a proposed development and the times when noise will be emitted or received, it is also important to note whether the noise emissions are likely to contain annoying characteristics - refer to Section 6 of the *Environmental Protection (Noise) Policy 1997*. The different types of noise generating activities that need to be considered include -

(a) noise during construction phase;
(b) noise from normal plant operation;
(c) transport and traffic noise, including increased traffic movements;
(d) behavioural noise;
(e) music and entertainment, both live and recorded;
(f) public address systems;
(g) noises normally associated with the conduct of a particular industrial or commercial use.

(12) Other noise generating activities arising from within the development site should also be taken into consideration at the planning phase. For example, locating residential backyards with pools and lounge rooms with sound systems away from bedrooms of neighbouring houses. Developments with mixed uses need to consider noise impacts on residential components or other noise sensitive environments of the development. When considering noise attenuation measures, applicants should evaluate a range of acoustic treatments available to achieve the required noise criteria.

Note -

Acoustic fencing is the least preferred noise attenuation measure and should only be used where all other measures have been explored, or where necessary to supplement other measures.

(13) It should be noted that, depending on the issues, officers from different areas within council may need to be involved in the assessment of the noise component of a development application. For example the range of issues for a noise assessment that are likely to require input from different areas within council are -

(a) acoustic performance issues;
(b) wildlife and vegetation issues;
(c) landscaping and safety issues;
(d) amenity issues;
(e) road access;
(f) structural requirements, design and proposal layout issues;
(g) maintenance issues.

5.6.2 Noise Emitters

(1) This section of the policy seeks to provide a general approach for assessing noise impacts from a range of emitter sources, and encourages applicants to take opportunities to reduce noise emissions through the application of best practice environmental management measures. Such measures include noise minimisation technology, construction, design, location, form, environmental performance, and management considerations and alternatives. Examples are given in Appendix 2.

(2) Where the proposed development is considered likely to cause a noise impact on a sensitive receiving environment, in addition to demonstrating the proposed best practice noise management measures as described in Appendix 2, a noise report may also be required to confirm that the development will not adversely impact on the receiving environment. Refer to section 5.6.4 Noise Reports for more details.

5.6.3 Noise Receivers

(1) Uses which are potentially affected by intruding noise are defined as sensitive receiving environments - refer to Part 9 - Schedule 3 - Dictionary.

(2) Where a proposed development includes a sensitive receiving environment and is located within close proximity to an incompatible noise emitting use, a noise report may be required to demonstrate that acceptable noise levels will be achieved at the proposed development site. Refer to section 5.6.4 Noise Reports for more details. In some instances the term “close proximity” may be referred to as the prescribed separation distance or a trigger area, identified in a code that is relevant to either the proposed development or the incompatible noise emitting land use.

(3) All acoustic matters for a development should be addressed at the earliest application stage. This means the application should address both the macro issues of lot design, set backs, noise assessments and noise barriers; and the micro issues of location of designated private open space areas, internal noise levels, and implementation of appropriate construction standards.

(4) Part 5 - Division 10 - Road and Rail Noise Impacts Overlay Code specifies design level noise criteria for the designated private open space areas of a dwelling unit. The intent of this provision is to ensure that there is sufficient space within the development where people can relax, entertain and recreate without being unduly affected by noise. This should also be addressed at the earliest design stage. An example showing a designated private open space area is shown in Diagram 1.

(5) In certain circumstances, covenants may be placed over land where it has been identified as being adversely affected by noise. Where noise levels for any part of a lot exceed the façade level or designated private open space area level as set out in Table 1 - Road Design Level Noise Criteria for Road and Rail of the Road and Rail Noise Impacts Overlay Code, it is declared “noise affected” and covenants may be applied to such lots or developments. This decision may need to be considered based on an assessment undertaken within a 10 year planning horizon, to factor in the changes to the receiving environment such as the future construction of intervening structures. It is recommended that the applicant check if such a covenant exists prior to submitting their development application. Development of sensitive receiving environments within areas predicted to be subject to noise in excess of the façade level, as set out in Table 1 - Road Design Level Noise Criteria for Road and Rail of the Road and Rail Noise Overlay Code, is unlikely to be permitted.

Diagram 1 - Designated Private Open Space Area

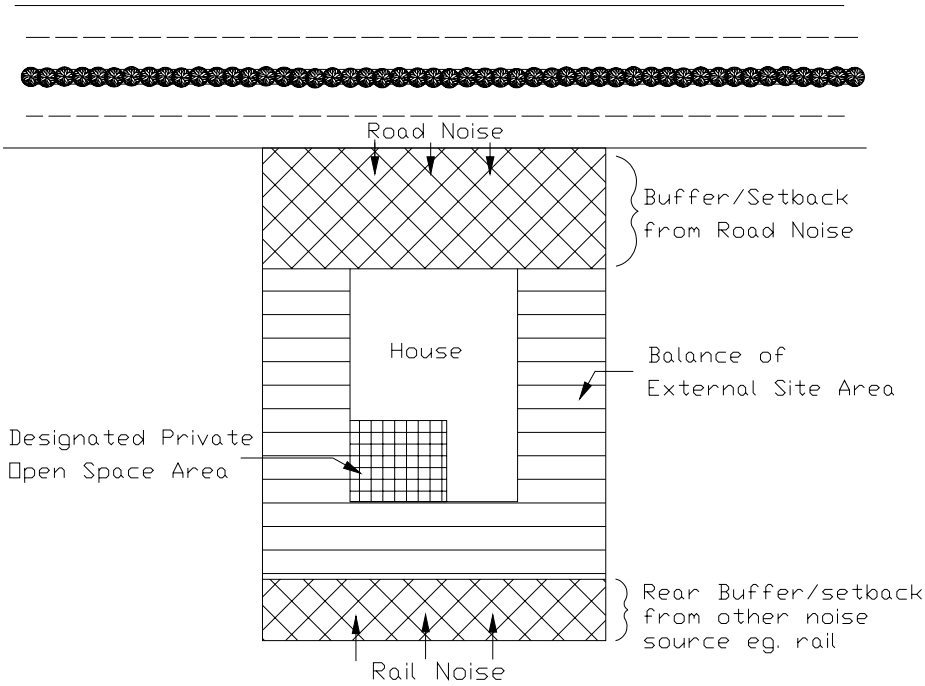

5.6.4 Noise Reports

(1) Development that has the potential to generate noise or receive intrusive noise, as discussed in the previous sections, may be required to address these noise issues in a noise report. A noise report is to be prepared by a suitably qualified and experienced acoustic consultant. A noise report should discuss the following issues in relation to the development, where applicable -

(2) For industrial or commercial development, in demonstrating that Best Practice Environmental Management is implemented to minimise noise emissions, the following information may be required with the application -

(a) Orientation of buildings and facilities -
- (i) plans showing the location of openings directed away from sensitive receiving environments, and acoustic screening of outside activities such as deliveries or refuse collection;
- (ii) plans showing location of noise generating plant such as air conditioning, pumps, compressors and fans with respect to adjacent sensitive receiving environments, and details of proposed noise attenuation devices;

(b) Design and construction materials used -
- (i) sketch plans and elevations showing building design and materials;
- (ii) the façade noise level used as the basis for calculating building attenuation requirements at each location including reduction weightings (Rw) for the building;

(c) Proposed operations -
- (i) a comprehensive description of -
  - a. plant and equipment to be used, including its location, time and period of operation, and frequency of use;
  - b. other noise sources which may exist, including the location, time, nature and frequency;
- (ii) the operating sound power level in dB(A) and frequency analysis for all proposed equipment and plant;
- (iii) a description of any behavioural noise;
- (iv) an accurate description of any noise with annoying characteristics, described in terms of the noise level, frequency and duration of occurrence;
- (v) if an exact description of equipment cannot be supplied, noise data from equivalent equipment operating at similar operating conditions may be accepted as a substitute;

(vi) details of the frequency of proposed road, rail, air or water borne transport to and from the site. Transport or haul routes are located to cause minimum noise impact in surrounding areas and are identified on a suitable map;

(d) Noise issues -
- (i) all noise issues associated with a proposed development are clearly defined, preferably in a table or list;
- (ii) minor noise issues which do not justify a full analysis should still be identified and reasons given to explain their insignificance;

(e) Noise control strategy -
- (i) a clear and concise statement is required which sets out the proposed strategy or strategies to deal with each of the identified noise issues. This may include a combination of -
  - a. source control - such as plant selection;
  - b. source modification - such as acoustical treatments or management measures;
  - c. propagation control - such as buffers and barriers;
  - d. receptor modification - such as a dwelling upgrade;

(f) Control at the source -
- (i) use of low-noise equipment such as refrigeration condensers, packaged low-noise air compressors or generator sets;
- (ii) use of alternative, quieter technology, for example replacing sirens with flashing lights, using electric cranes in preference to diesel-powered cranes and using mobile phones or personal pagers instead of telephone extension bells;
- (iii) use of more appropriate control technologies such as variable speed drives on cooling tower fans or two-speed fans on air-cooled condensers in order to avoid stop/start operations and to reduce noise emission levels at night;
- (iv) use of carbon monoxide monitors to control fan operations in carpark exhaust systems, again matching fan performance to demand to effectively reduce noise emissions at night;
- (v) use of solid-state switching in preference to relays;
- (vi) use of soft-start electric motors on drives which require cyclic operation;
- (vii) the report describes any recommended or proposed low-noise plant. Where the make and model of specific plant selections can be identified, their noise performance is detailed in terms of their sound power levels or sound pressure levels at nominated distances. Where schematic or conceptual designs only are available, the typical performance and improvements are stated;

(g) Source modification -
- (i) this may include technical treatments such as acoustical enclosures around plant, or may rely on staff implementing appropriate procedures to minimise noise -
  - a. there are a number of firms specialising in noise control, offering both off the shelf and purpose-designed acoustical treatments. Such treatments have the potential to interfere with the performance and/or efficiency of plant operation. It is therefore recommended that specialist advice be sought in the planning and design of these measures;
  - b. the report describes the intended noise reduction measures and their anticipated performance;
  - c. management measures include all noise control actions which rely on people to behave in a particular way. This may require delivery drivers to use a specific route or curtail particular activities such as the use of exhaust brakes. It may require staff to restrict certain activities to certain times or to intervene by closing doors or re-directing activities;
  - d. if management measures are proposed, a site-specific noise management plan is required. This plan should include at least one contingency action in the event that the primary noise plan fails to achieve or maintain the nominated outcome;

(h) Propagation control includes the use of buffer zones and/or noise barriers to achieve noise attenuation. The report shall include plans showing the locations and heights of all noise sources, and the locations and heights of any proposed noise barriers. Where buildings are relied on to provide barrier screening, the elevations and locations of openings such as doors and windows are also provided;

(i) Information on noise monitoring and/or noise predictions, modelling and results including -
  (i) a description of the existing noise climate including -
    a. ambient noise levels during day, evening and night periods on both weekdays and weekends;
    b. prevailing atmospheric conditions;
  (ii) location of monitoring sites and rationale for its selection;
  (iii) noise prediction results for when attenuation measures are provided and where no attenuation measures are provided;
  (iv) details and assumptions used in the model for predictions;
  (v) criteria established for assessment purposes;

(j) When including details of attenuation measures identified to achieve compliance with noise criteria, also provide the methods used to calculate this attenuation.

(3) For development of sensitive receiving environments adjacent to roads and railways, as identified in the Road and Rail Noise Overlay -

(a) Describe the noise attenuation measures to be implemented to reduce traffic noise affecting the proposed adjoining development. Noise nuisance should be ameliorated in the first instance through the design, orientation and layout of the site - refer to Diagram 2. As stated earlier, to achieve the design level noise criteria it should be demonstrated that a range of acoustic treatments available for application at the site were evaluated;

Diagram 2 - Design and layout for rooms sensitive to noise

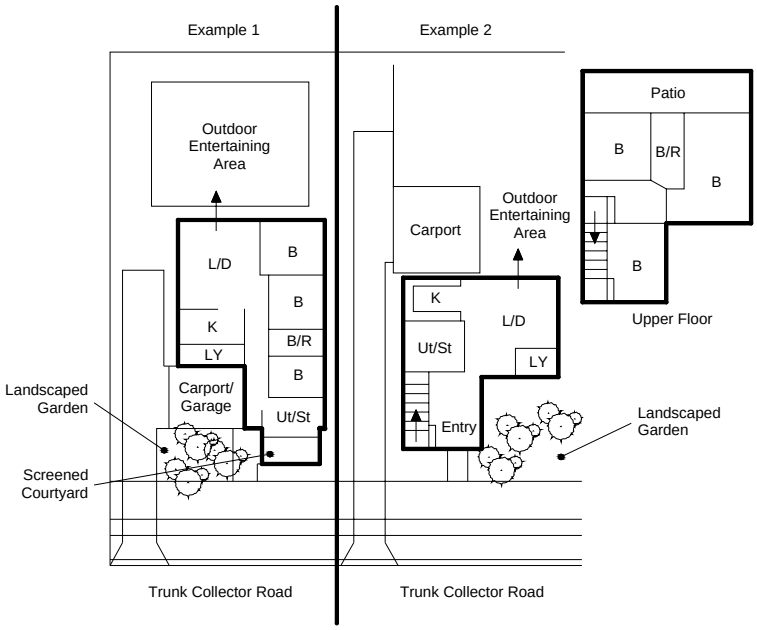

(b) For developments including a sensitive receiving environment adjacent to roads and railways, the noise report should also include a suitably scaled plan indicating the following -
  (i) for road noise -
    a. predicted 60 (or 63) dB(A) $L_{A10\ (18\ hour\ or\ less)}$ contour with and without noise attenuation measures;
    b. predicted 55 dB(A) $L_{Aeq\ (1hr)}$ contour with and without noise attenuation measures;
    c. the noise contours are plotted for both lowset and two-storey dwellings. For dwellings, the receptor height is taken to be 1.5 metres above each finished floor level;
  (ii) for rail noise -
    a. predicted 87dBA $L_{A\ max}$ contour with and without noise attenuation measures;
    b. predicted 65 dB(A) $L_{Aeq\ (24\ hour)}$ contour with and without noise attenuation measures;
    c. predicted 55 dB(A) $L_{Aeq\ (1hr)}$ contour with and without noise attenuation measures;
    d. the noise contours are plotted for both lowset and two-storey dwellings. For dwellings the receptor height is taken to be 1.5 metres above each finished floor level;

(iii) location of proposed barriers indicating heights of barriers and portion of land required to accommodate mounds, where applicable;
(iv) floor plan / layout of proposed development, where applicable;
(v) the noise measurement location and its rationale for selection;
(vi) calculations must indicate the attenuation provided by each alternative through distance, barrier, building and angle of exposure;
(vii) show cross sections of the design and proposed location of the acoustic barriers where not in compliance with the policy;
(viii) the option for the use of acoustic barriers is supported by an assessment of the public safety and visual amenity of the structures;
(ix) provide indicative elevations of "cross sections and plans" to indicate that the barriers will "fit" on the site and that adequate park dedication is provided to "fit" the barrier.

(4) General requirements for developments that include sensitive receiving environments -

(a) Buildings are designed and constructed to reduce the intrusion of noise, by locating rooms most sensitive to noise such as those for sleeping, relaxation or study, furthest from existing and potential noise sources.

(b) Buildings are constructed using materials including insulation and glazing materials with a high noise transmission loss. For example, where sites are potentially affected by road noise, buildings are constructed in accordance with *Australian Standard 3671:1989 Acoustics - Road traffic noise intrusion - Building siting and construction*.

(c) Reduce the area covered by openings such as windows and doors that face existing and potential noise sources.

(d) Provide mechanical ventilation to rooms most sensitive to noise such as those for sleeping, relaxation or study.

(e) Provide adequate setback or buffer distances between noise sources and the sensitive receiving environment -
(i) in providing setback or buffer distances between noise sources and sensitive receiving environments, site specific distances are calculated by a suitably qualified acoustic consultant. Issues including topography, climate and all current and predicted impacts from incompatible adjacent land uses, during day and night time periods, are considered in determining these buffer distances;
(ii) where buffer distances are incorporated within the lot or premises, sensitive receiving environments are indicated on proposal plans and are not located within the buffer.

(f) Design, orientate and construct buildings to effectively screen external private open space areas from the noise source.

(g) Use appropriate buffer distances between the noise source and external private open space areas.

(h) Provide suitable noise attenuation barriers where needed.

Note -

Setbacks and building design are the preferred noise management measures and the consideration of these and other noise management options should be demonstrated prior to proposing barrier attenuation.

(i) Where requested, also provide noise monitoring information and/or noise prediction and modelling including noise assessment results, as previously outlined.

5.6.5 Noise Assessment

(1) A noise report prepared to assess noise nuisance potential must include the following information as a minimum -

(a) A site analysis plan at a scale of 1:100 or 1:200 indicating the location of the development, noise sources and sensitive receiving environments;

(b) A site layout and surrounds plan at an appropriate scale indicating -
- (i) the location and direction of noise sources and sensitive receiving environments and the location of noise attenuation devices and appropriate buffer distances;
- (ii) the layout and/or elevations of the built environment including walls, ceilings or room contents, if appropriate, and other structures. If outdoors, trees, reflective objects, topographic features and any other relevant features are indicated on the plan;
- (iii) where maximum noise levels are expected at the affected premises;
- (iv) where relevant barriers, mounds, vegetation and ground cover in buffer or separation distance are to be installed;
- (v) identification of other existing and proposed land uses in the vicinity of the noise affected premises;

(c) Design and construction details include -
- (i) for sensitive receiving environments -
  - a. show the location of bedrooms, living rooms, windows and other openings, designated private open space areas and setback distances to noise emitters;
  - b. describe the acoustic treatments proposed for the building to reduce noise impacts;
- (ii) for a noise emitter, show -
  - a. the location of all noise sources such as dining areas, air conditioning, pumps, compressors, fans;
  - b. the location of building openings with respect to adjacent sensitive receiving environments;
  - c. details of proposed noise attenuation devices;
- (iii) a description of the noise sources, including use operating hours and operating conditions, where applicable;
- (iv) noise attenuation measures including, where necessary, fences, barriers and mounds;
- (v) landscaping associated with noise attenuation measures, including buffer areas;
- (vi) photographs, where appropriate, to support the assessment conclusions;

(d) Noise levels -
- (i) a map showing the location of measurement positions, detailing microphone height and orientation, and including details of any obstructions or interference such as reductions in the angle of view;
- (ii) reflective surfaces and atypical barriers are avoided where possible when taking measurements;
- (iii) the type of sound being measured and the character of the sound field;
- (iv) the sound power levels obtained, including frequency analysis, where relevant;
- (v) the sound pressure levels measured at each monitoring location, including output data such as log files, traces, and charts from the noise monitoring equipment;
- (vi) frequency weighting and response time, fast/slow/impulsive, used for each measurement;
- (vii) duration of each measurement period. Measurement intervals shall not be less than 15 minutes;
- (viii) date and time at which each measurement was performed. It is important the monitoring is carried out at times and over periods that adequately characterise the noise under investigation and the local acoustic climate. Justification of times and periods selected should be included;
- (ix) relevant meteorological conditions and other site considerations during assessment. These include, for example, air temperature, relative humidity, barometric pressure, wind speed and direction, rain, aircraft noise, vehicle noise and insect noise;
- (x) noise level or noise contour predictions in the locality both with and without noise attenuation;
- (xi) the assessment should include an evaluation of a range of noise attenuation options and recommendations to mitigate potential noise nuisance;
- (xii) provide details and justification of the methodology used, including all assumptions made as part of the assessment;
- (xiii) name of manufacturer, type and serial numbers of all monitoring and calibration equipment;
- (xiv) last laboratory calibration date, internal reference check and external calibration results before and after measurement;

(xv) name of the person who conducted the assessment and the name of the report author, if different;

(e) Noise modelling and calculations -
- (i) details of noise measuring and modelling procedures, calculations and assumptions;
- (ii) name of the model used for the predictions;
- (iii) monitoring data which supports calculations resulting from modelling;
- (iv) information on calibration of the model and the model's accuracy is provided. Where it is not provided, it is assumed that the model's accuracy is that reported in literature;
- (v) an example of calculations showing effectiveness of proposed noise attenuation measures is also provided;

(f) Other information -
- (i) in certain cases the assessing officer may request information on additional matters. Such requirements would normally be identified at a pre-lodgement meeting or through the Information Request Period for a Development Application;
- (ii) provide enough information to justify the noise level criteria you have chosen. Where there are no specific measures for evaluating noise under consideration, the following noise levels are used -
  - a. Community Noise - Table 4 provides desirable levels for community noise or where Table 4 cannot be practicably achieved the comparison of like parameters is applied;
  - b. Blast noise - Table 5 provides noise level criteria for blasting;

Table 4 - Desirable levels for community noise

Sleep disturbance objective	Sleep disturbance criteria
■ 30dB LA_{eq} for continuous noise ■ 45dB LA_{max} for single sound events	Where the sleep disturbance objective can not be practicably achieved, other criteria for sleep disturbance may be used, providing it can be demonstrated the criteria is suitable for assessing likelihood of sleep disturbance.
Conversation disturbance objective	**Conversation disturbance criteria**
■ 35 dB LA_{eq}	Where the conversation disturbance objective can not be practicably achieved, other criteria for conversation disturbance may be used, providing it can be demonstrated the criteria is suitable for assessing likelihood of conversation disturbance.

Table 5 - Criteria values for noise from blasting

Airblast overpressure	Ground vibration
115 dB(Lin) peak for any 4 out of 5 consecutive blasts at any noise sensitive environment	■ >35Hz maximum of 25mm/s ■ <35Hz maximum of 10mm/s

- (iii) intrusive noise impact can be measured using long-term, cumulative noise exposure criteria and/or short-term, emission/immission criteria, depending on the receiving environment. The choice of criteria will depend on the sensitivity of the receiving environment at particular times of the day. For example, a school will have a requirement for suitable noise levels within the classrooms only during their use. Therefore a 24 hour criteria would not be appropriate for such a use, and a short-term criteria should be used;
- (iv) for short duration noise events of a minimum measurement interval of 15 minutes or for blasting, include -
  - a. the number of discrete noise events from the source and in the existing environment;
  - b. the time of occurrence;
  - c. the character of the noise source;
  - d. whether this type of noise would normally be present in the area;
  - e. the likely impact of the noise on the receiver;
- (v) monitoring results should include presentation of a range of descriptions. Where percentile levels are used, such as $L_{A10,T}$ $L_{A90,T}$, include a cumulative distribution of percentile levels for both the source and background noise;

(vi) for each report, environmental noise and vibration must generally be assessed and measured in accordance with the relevant guidelines outlined in the references listed in Table 6.

Table 6 - Australian Standards and other reference material for assessment and measurement of environmental noise

Australian Standards and other reference material for assessment and measurement of environmental noise
■ *Guidelines for Community Noise, World Health Organisation, Geneva, 1995*. ■ *Australian Standard 1055.1-3 - Acoustics - Description and measurement of Environmental Noise*. ■ *AS/NZS 2107: Acoustics - Recommended Design Sound Levels and Reverberation Times for Building Interiors*. ■ *Australian Standard 2702 - Acoustics - Methods for the Measurement of Road Traffic Noise*. ■ *Australian Standard 2021 - Acoustics - Aircraft Noise Intrusion - Building, Siting and Construction.* ■ *AS/NZS3817 - Acoustics - Methods for the Description and Physical Measurement of Single Impulses or Series of Impulses, which outlines appropriate ways to describe impulse noise*. ■ *Australian Standard 1259.1 - Acoustics - Sound level Meters - Non-integrating.* ■ *Australian Standard 1259.2 - Acoustics - Sound level Meters - Integrating - Averaging.* ■ *Australian Standard 2670.2 - Evaluation of Human Exposure to Whole-body Vibration - Continuous and Shock induced Vibration in Buildings.* ■ *Australian Standard 3671 - Acoustics - Road Traffic Noise Intrusion - Building Siting and Construction*. ■ *Australian Standard 1633 - Acoustics - Glossary of terms and related symbols*. ■ *Australian Standard 2659 - Acoustics - Guide to the use of sound measuring equipment Part 1: Portable sound level meters*. ■ *AS/NZS4476: Acoustics - Octave-band and fractional-octave-band filters*. ■ *Code of Practice for Railway Noise Management by QLD Rail*. ■ *Road Traffic Noise Management Code of Practice by QLD Department of Main Roads*. ■ *Noise Measurement Manual 3rd ed., Queensland Environmental Protection Agency, March 2000*. ■ *Environmental Protection Act 1994* and subordinate legislation.
Note - The most recent or updated edition of these references should be applied.

5.6.6 Noise Prediction and Modelling

(1) Noise prediction modelling is generally used to predict noise levels generated by noise sources, to calculate propagation and attenuation, or a combination of both. These are often theoretical models used to predict the pattern of the sound field for a given configuration of source and boundary conditions. Most predictions are done with a computer model, however hand

calculations may be acceptable provided that the principles for computer modelling are followed. The noise prediction should involve the following -

(a) An estimate of the cumulative sound pressure level at the boundaries of the proposed site and at the boundaries of existing and future land uses likely to be affected by the noise sources. The values are plotted on a contour map at 5 dB(A) intervals. This should include consideration of all potential noise sources, including during the construction phase, normal plant operation, behavioural noise, P.A. announcements and increased traffic movements;

Note -

It should be noted that the presentation of model output data in the form of noise contours is generally not suitable for determining noise levels at individual locations or determining compliance with noise criteria. Noise contours should be supported with detailed predicted levels at critical locations such as houses, schools and hospitals.

(b) A description of the modelling methods applied;

(c) Where noise originates from the interior of proposed buildings, engineering drawings showing building dimensions, wall and roof materials with the location and size of any openings are provided. Plan and sectional elevations should show any openings in the building façade;

(d) Topographical maps of scale 1:10000 are included where topography and/or permanent structures could greatly affect the propagation of noise to surrounding areas. Reduction in noise due to natural and artificial screening from buildings and other structures should be included in the modelling exercise;

(e) A description of the nature of ground cover, for example, thick grass, shrubbery and dense vegetation between the proposed development site and the area likely to be influenced;

(f) An estimation and description of the L_{A10}, L_{Amax}, L_{A90}, L_{Aeq} and maximum instantaneous (L_{pA}) levels, as appropriate for periods representative of day, evening and night times for both weekdays and weekends;

(g) Noise levels should represent normal day to day operations. Circumstances giving rise to periods of higher noise levels are described with details of these levels and the estimated duration and frequency of occurrence of these levels;

(h) Where tonal components are expected to be present, one-third octave band predictions are required to adequately describe the contribution from these noise sources. The level and frequency of occurrence of impulsive noise, or noise with other annoying characteristics such as amplitude or frequency modulation or information content[1], should be provided;

(i) Predictions should be based on atmospheric conditions prevailing at the time of the assessment. An estimate should be provided of the expected increase in noise level at receptor premises under meteorological conditions conducive to noise propagation, with a down wind component or temperature inversion. Representative meteorological data, such as that from a local weather station, are reviewed and weather conditions characteristic of the site for different times of the year should also be included in the assessment;

(j) Individually predicted components are combined to produce the predicted cumulative noise impact at each receptor site;

(k) Predicted noise levels are compared with acceptable levels and/or the acceptable solutions specified in the relevant codes. Exceedances are identified separately and the relevant degree of noise reduction required to achieve compliance with the appropriate criteria is specified;

(l) The model applied should comply with the Australian Standards and Noise Measurement Manual listed in Table 6.

[1] Voice or music

5.6.7 Noise Reduction

(1) Details are provided about the proposed noise control measures to be applied at the site, including the expected noise reduction where the earlier assessment of predicted levels shows adverse local and remote noise impact.

(2) The scale of the improvements to be provided by the noise control measures is predicted to confirm compliance with the appropriate criteria. For example, this could be demonstrated by providing contour predictions on a site plan for each of the attenuation options.

(3) If acceptable noise levels cannot be achieved, additional information is provided to justify approval of the development.

5.6.8 Noise Attenuation Barriers

(1) The use of barriers for noise attenuation is the least preferred option, however, the following should be considered during the design of the development where noise attenuation measures in the form of barriers, fences and vegetated buffers are required.

(2) The design of these noise attenuation measures should not -

(a) compromise the ability to protect property from crime and vandalism;
(b) obstruct or reduce passage by pedestrians to public transport nor contribute to deterioration of accessibility to public transport;
(c) create sterile areas that are unusable, unsafe and negatively affect the streetscape;
(d) result in continuous barrier fencing along roadways which has both visual impacts and also impacts on people and wildlife movement;
(e) obstruct the overland flow of stormwater or cause increased flooding or ponding of stormwater;
(f) compromise the requirements of *State Planning Policy 1/97 - Conservation of Koalas* in the *Koala Coast and Planning Guidelines - Conservation of Koalas in the Koala Coast*;
(g) compromise the Redland City Council's Koala Conservation and Management Policy and Strategy 2002.

(3) Noise attenuation measures for dwellings or building façades should be designed as architectural features including the stepping of buildings, angling wall alignments, and roof line variation to add interest to the form and enhance the appearance to the street frontage.

(4) Noise attenuation measures are designed to facilitate wildlife movement while maintaining noise attenuation effectiveness by ensuring -

(a) vegetated earth mounds are considered in preference to fences or barriers;
(b) suitable vegetation is provided adjacent to noise attenuation mounds, barriers and fences to facilitate wildlife movement;
(c) attenuation barriers and fencing incorporate wildlife movement measures that are suitable to the species expected to use the area;
(d) vegetation species selected are locally native species. Refer to Redland City Council's Vegetation Enhancement Strategy 2004, or the most recent or updated edition/version.

Note -

For more detailed guidance on movement of native animals refer to Part 11 - Planning Scheme Policy 4 - Ecological Impacts.

(5) Continuous barrier fencing is avoided along trunk collector and sub-arterial roads so as to not create sterile traffic corridors.

(6) Views are retained where possible by using appropriate buffer distances, height, orientation and materials.

(7) Where fencing is used it is articulated, landscaped and incorporates multiple access points for pedestrians and cyclists.

(8) Acoustic fencing is of low maintenance design.

(9) When using measures such as earth mounds, fences or a combination of these, refer to Table 7 - Specifications for Noise Attenuation Measures (Barriers, Fences and Mounds).

(10) It should be noted that a covenant may also be applied where an acoustic barrier is required to be maintained on land to protect the amenity of the greater neighbourhood for example an acoustic fence which runs along the boundary of several individual properties.

(11) As stated earlier, it should be demonstrated that other attenuation measures have been considered first as alternatives to structural barriers. For example, at the design phase of a development, consideration should be given to the use of land between the source and receiver which can increase buffers and assist in attenuation. Such land uses could be minor roads and/or parks.

Table 7 - Specifications for Noise Attenuation Measures (Barriers, fences and mounds)

Type of Measure	Specifications
Earth Mounding - Landscaped **See Diagram 3**	■ Area required from property boundary to pavement kerb is a minimum of 11.6 metres - buffer zone plus road reserve/ verge. ■ Mound set at 3.6 metres from back of kerb. ■ Standard street tree planting to apply in 3.6 metre zone. ■ Mound width at base equal to 8 metres. ■ Maximum mound height at apex ranges from 1 metre to 2 metres. ■ Mound batters do not exceed 1:2 (V:H) slope. ■ Earth mound is clean, compacted fill with topsoil capping to minimum 300mm depth and minimum 100mm mulch layer over mound. ■ Mound is planted with a mixed range of local native species including large shrub/ small tree species and an under-storey of small shrub and groundcover species. ■ Mature height of - ▸ large shrub/ small trees is 6 metres; ▸ under-storey shrubs is 1 metre. ■ Density of planting is one plant per square metre with ratio one large shrub/ small tree to six under-storey shrubs. ■ All mounding is designed to avoid localised ponding with run-off directed towards suitable areas.

Type of Measure	Specifications
Earth Mounding - Landscape and Barrier Fencing **See Diagram 4**	■ Minimum area required from property boundary to back of kerb is 7.6 metres - buffer zone and road reserve / verge. ■ Minimum mound set at 3.6 metres from back of kerb / road edge. ■ Standard street tree planting to apply in 3.6 metre zone. ■ Mound width at base equal to 8 metres with 4 metres to extend within property boundary[2]. ■ Mound height at apex ranges from 1 metre to 2 metres maximum. ■ Mound batters do not exceed a 1:2 slope (V:H) slope. ■ Earth mound is clean, compacted fill with topsoil capping to minimum 300mm depth and minimum 100mm mulch layer over mound. ■ Mound is planted with a mixed range of local native species including large shrub/ small tree species and an under-storey of small shrub species and groundcover species. ■ Mature height of - ‣ large shrub/ small trees of 6 metres; ‣ under-storey shrubs of 1 metre. ■ Planting density is one per square metre with a ratio of one large shrub/ small tree to six under-storey shrubs. ■ Fence is of timber materials or other approved materials with height between 1.2 metres to 2 metres. ■ All mounding is designed to avoid localised ponding with run-off directed towards suitable areas.
Fence and Planted Buffer **See Diagram 5**	■ Area required from property boundary to back of kerb is a minimum 5.5 metres - buffer zone and road reserve / verge. ■ Dedicated land for planting buffer is a minimum of 2 metres wide. ■ Standard street tree planting to apply in 3.6 metre zone. ■ Planted buffer is clean, cultivated top soil to minimum 300mm depth with minimum 100mm mulch layer over ground. ■ Irrigation system satisfies the local government's standard specifications. ■ Buffer is planted with a mixed range of locally native species including large shrub/ small tree species and an under-storey of small shrub and groundcover species. ■ Mature height of - ‣ large shrub / small trees is 4 metres; ‣ under-storey shrubs is 1 metre. ■ Planting density is one plant per square metre with a ratio of one large shrub / small tree to eight under-storey shrubs. ■ Fence is of timber construction or other approved fencing products with a maximum height of 2 metres. ■ Fence colour enhances visual amenity.

[2] Alternative designs to Diagram 4 which utilise less land area may be considered, where appropriate.

Diagram 3 - Earth Mounding - Landscaped

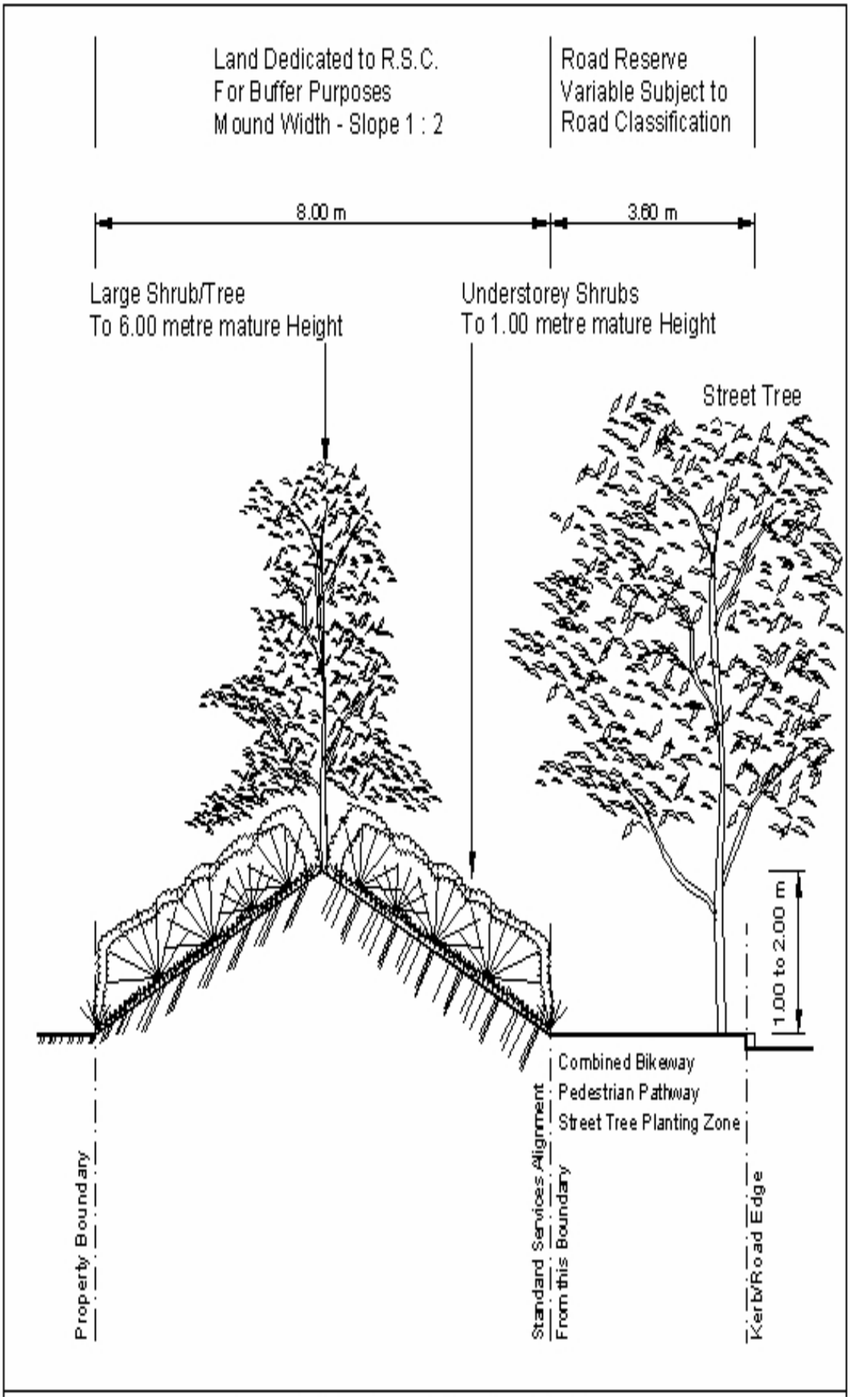

Diagram 4 - Earth Mounding - Landscape and Barrier Fencing

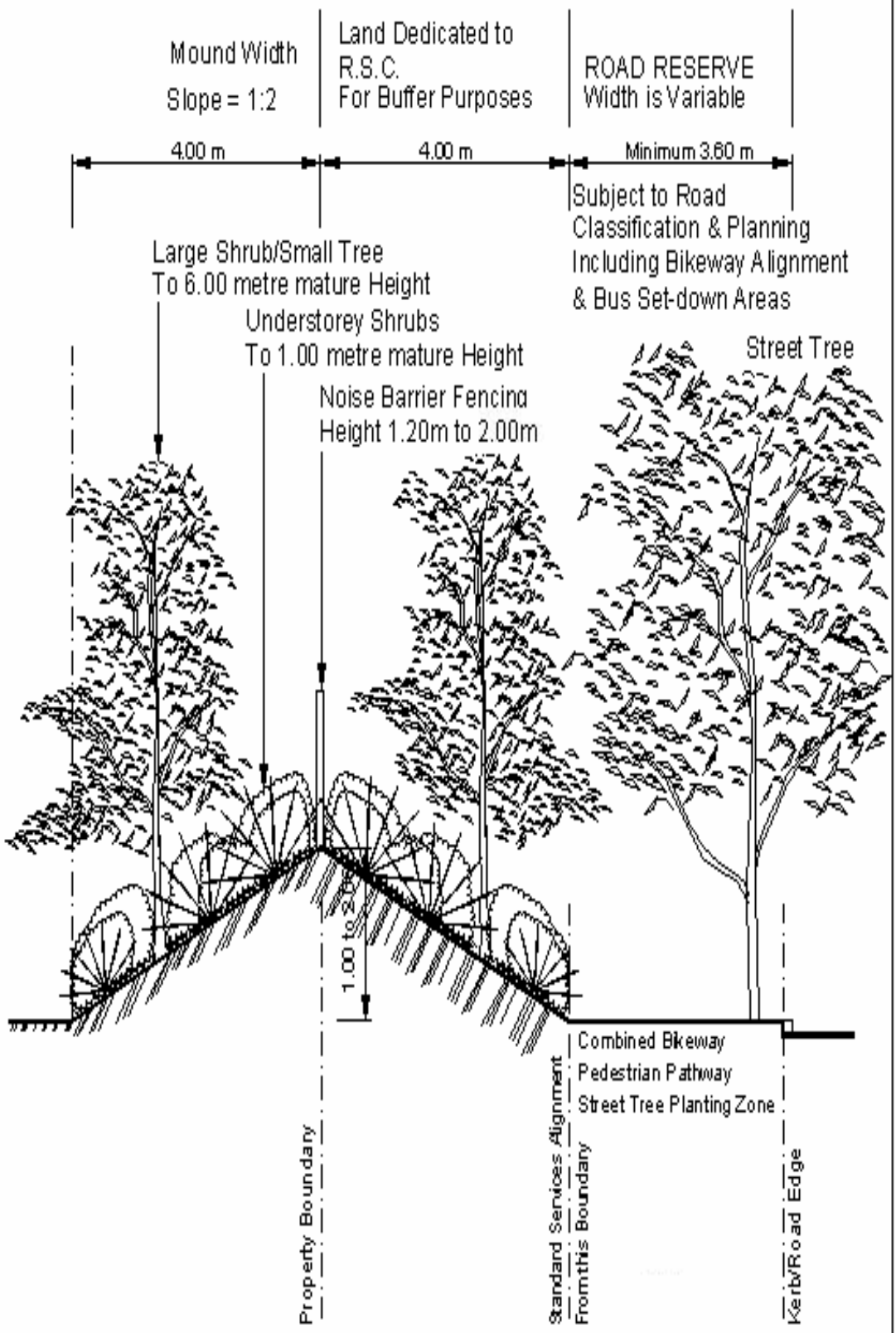

NOTE: Combination of minimum 1.00 metre high mound with 1.20 to 2.00 metre high fence can be considered as the minimum requirement.

Diagram 5 - Fence and Planted Buffer

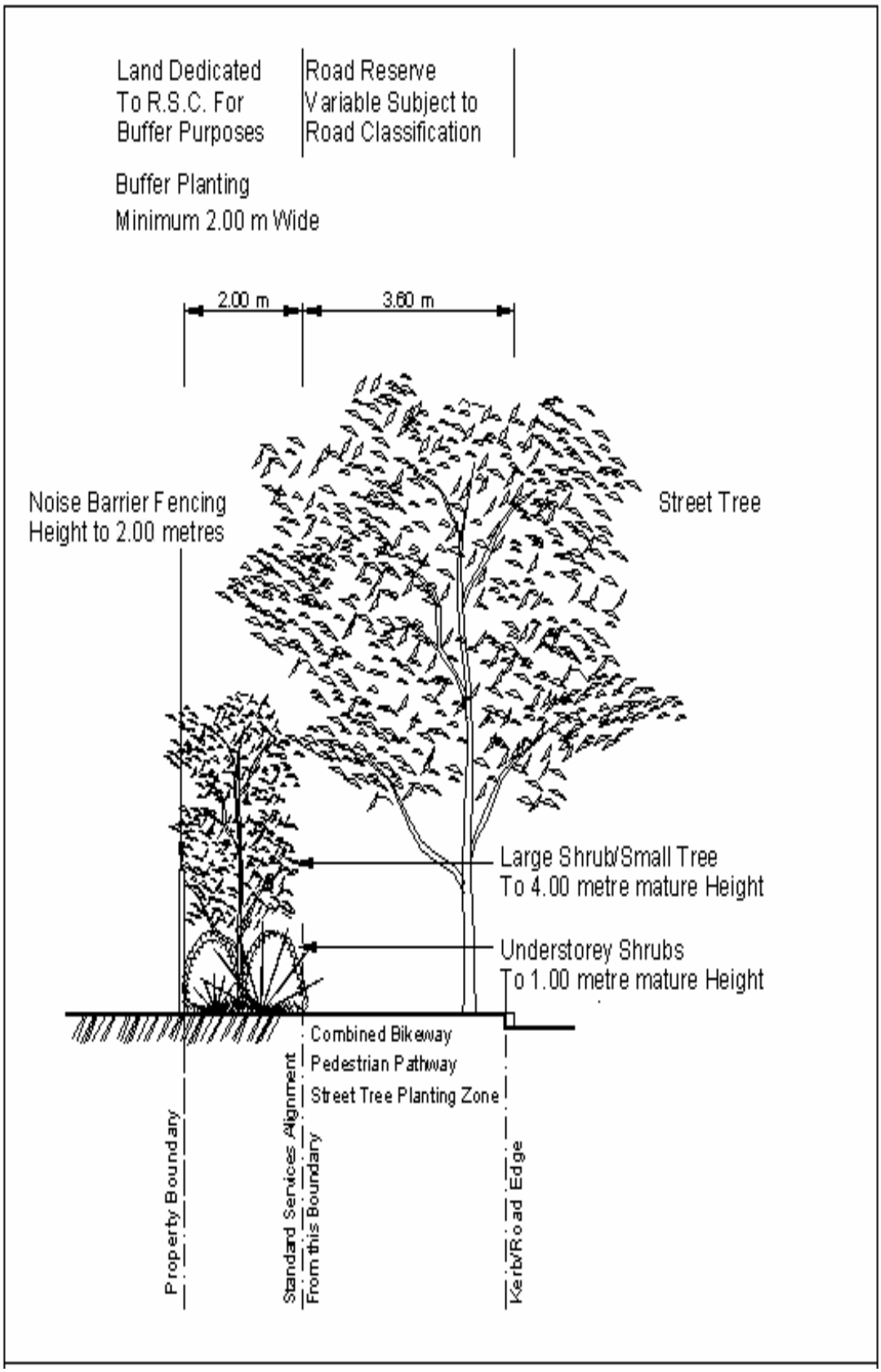

5.6.9 Additional guidance on specifications

In addition to the specifications listed in Table 7, which provide guidance to applicants about how to design and construct acoustic barriers, the following design elements are also provided to supplement these specifications.

Diagram 6 - Wildlife Movement 1

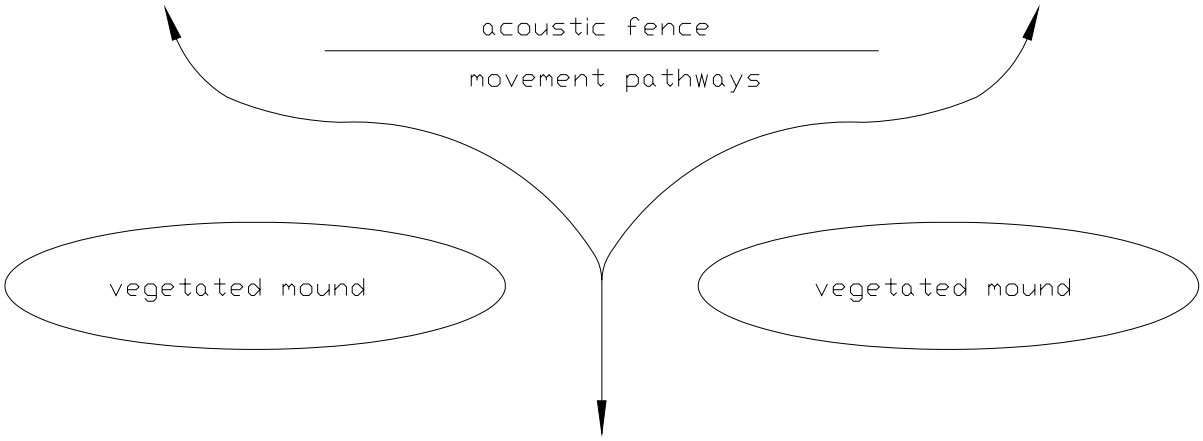

Diagram 7 - Wildlife Movement 2

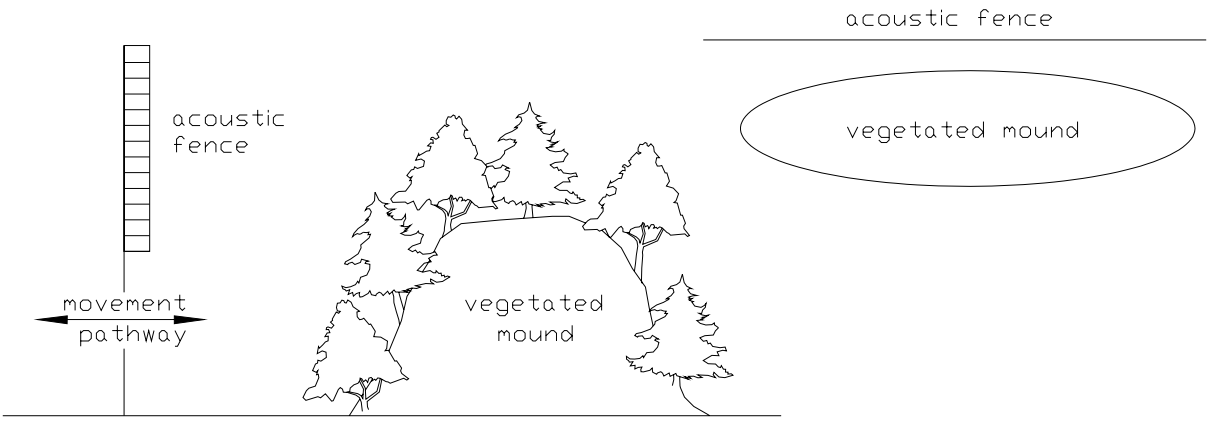

Diagram 8 - Pedestrian/Cyclist Movement

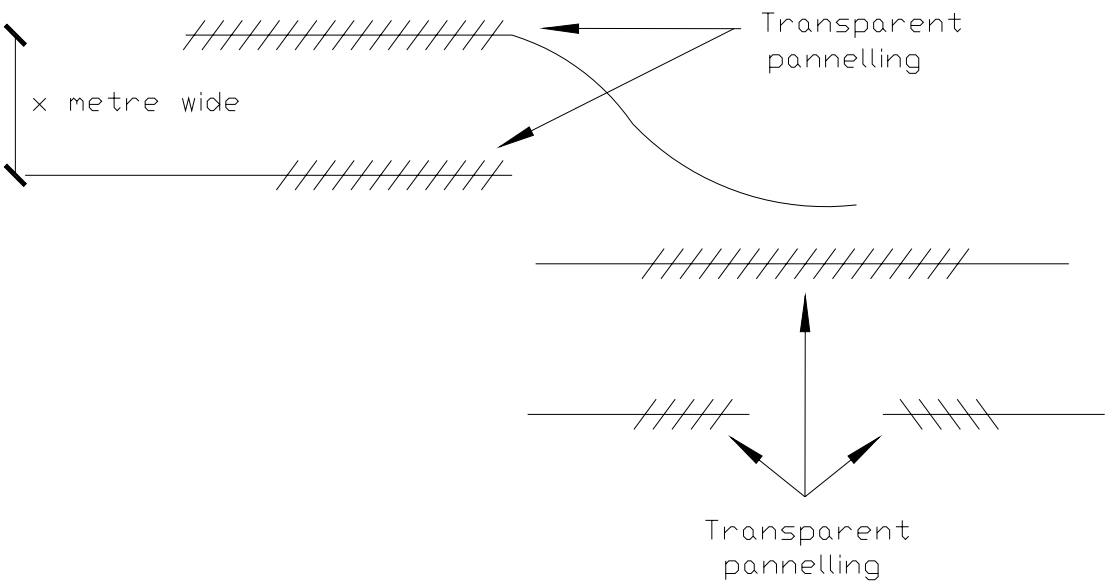

5.6.10 Alternative Fencing Products

(1) Transparent panelling such as glass or plastic may have application in certain circumstances. These may provide benefits where acoustic fencing is required for noise attenuation and other issues require consideration such as visual amenity, scenic constraint areas and the prevention of crime and increased safety.

(2) However, the following matters should be considered -

(a) the “fishbowl effect” created by large expanses of transparent panels is minimised. This may be achieved by incorporating solid panels into the barrier so to improve visual amenity and wildlife safety - refer to Diagram 9;
(b) where transparent noise barriers exceeding 2 metres in height are proposed, further evaluation of alternative attenuation methods is undertaken considering visual, environmental and economic factors, including long term maintenance.

Diagram 9 - Use of transparent panelling.

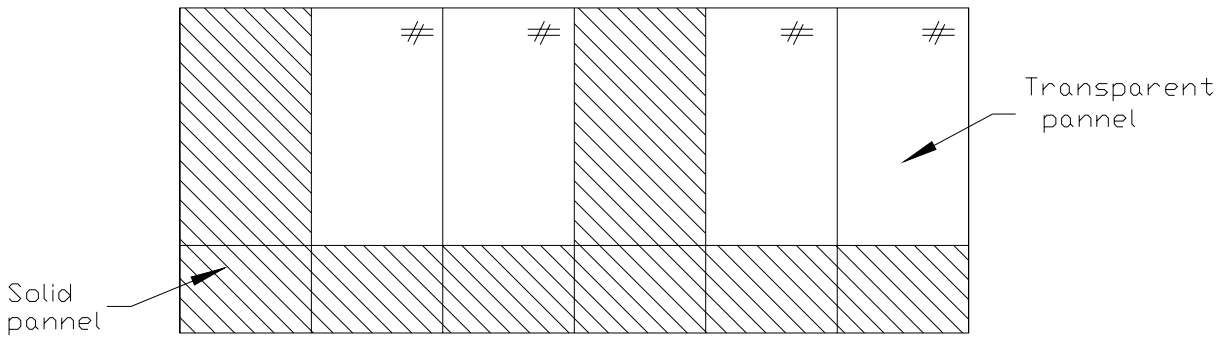

5.6.11 Noise Barrier Maintenance

(1) Noise attenuation measures and associated landscaping should be easily maintained, have long term durability and will not create ongoing maintenance resource demands for the local government.

(2) Noise attenuation measures and associated landscaping are designed and constructed to prevent and discourage graffiti and vandalism by, in areas where graffiti and vandalism have been experienced in the past, avoiding noise attenuation measures that obstruct and prevent surveillance from residential areas.

Appendix 1 - Methods to Minimise Impacts from Air Emissions

(1) This is not an exclusive list but merely provides a range of examples for minimising air emission impacts.

(2) Design and operations management -

(a) Maintain adequate buffers between operations and nearest sensitive receiving environment;
(b) Incorporate alternative attenuation measures into the development to reduce nuisance impacts at sensitive receiving environment;
(c) Locate and design the buildings and infrastructure to reduce potential impacts on adjacent land uses, for example locate building openings, exhaust vents, stacks, and refuse storage areas furthest from sensitive receiving environments;
(d) Provide sealed areas on site for vehicle manoeuvring and access;
(e) Clean equipment, work and traffic areas regularly to minimise the sources of dust and clean spilt materials immediately;
(f) At sites which have potential organic vapour emissions such as bulk fuel storage facilities and service stations, where practicable, install vapour recovery systems. Vent pipes are located as far away as possible from sensitive receiving environments;
(g) Develop and implement an environmental management plan that details the procedures for air quality management and pollution prevention, staff training, role definition and responsibilities and monitoring of performance.

(3) Dry materials/stockpile handling -

(a) Maintain exposed stockpiles of raw or processed material to prevent fugitive dust emissions.
(b) Maintain stockpiles with walls on three sides and use water sprays to keep material damp where practicable;
(c) Keep stockpile materials 0.5 metres below wall tops and 0.5 metres inside open ends of stockpile walls;
(d) Enclose conveyors and chutes to minimise wind-generated dust emissions and provide a belt scraper on each conveyor;
(e) Use water sprays at receival areas and transfer points to keep material damp. Minimise drop height between conveyors;
(f) Store materials which are of fine or small particle sizes in sealed containers where practical.

(4) Surface cleaning and/or coating -

(a) Surface coating by spraying is conducted in spray booths fitted with adequate filters to catch overspray. Filters can be waterwash, fibre or baffle. A baffle filter is only acceptable for small paint rates where paint is applied electrostatically. Where practicable surface coating and cleaning are conducted inside of buildings or enclosures;
(b) Spray booths are fitted with a stack of adequate height to ensure there is sufficient dispersion of exhaust gases. Stack outlets should not be fitted with conical weather caps, spinning tops or the like which would interfere with the free vertical discharge of the exhaust gases.
(c) Where possible, use water-based coatings or those which produce low emissions;
(d) Replace lids or cover odorous materials promptly after use to minimise evaporation, off site impacts and wastage;
(e) For surface coating processes, train staff in proper application techniques of materials to improve drying times and minimise odour impacts;
(f) Surface finishing equipment using abrasive and water blasting, sanding and grinding should have dust collection devices fitted, such as an enclosed booth, unless the object is too large or too heavy to fit in the booth or a fixed structure. Outdoors blast cleaning should preferably be carried out using a blasting gun or an airless applicator which sucks away the blasting agent together with any dust generated to a dust collector. Outdoor abrasive blasting should also be avoided during high wind conditions. Where impractical, adequate buffer distances are provided with effective barriers or screens to prevent adverse particulate emissions.

(5) Emission controls -

(a) Point source particulate and odour emissions are vented through a filter to minimise the discharge. Filters include devices such as: wet scrubber, cyclone, bag, electrostatic, paper,

activated carbon, and fibre. Odour control equipment can include one or a combination of technologies including condenser, scrubber biofilter and/or afterburner;

(b) Use mechanical ventilation systems and activated carbon filters or scrubbers to prevent the release of any uncontrolled and objectionable odours from buildings or rooms;

(c) Fabric or bag filters are installed to vent silos. Silos should also include automatic level sensors, air tight inspection hatch and an alarm or shut off valve to prevent overfilling and a burst bag detector system with ducting to ground level near tanker filling point;

(d) Dust extraction systems exhausting through fabric filters may be an effective alternative to water sprays. Water spray systems are installed for outdoor operations with a high dust generating potential;

(e) Fuel burning should not be carried out under reducing conditions which has the potential to cause smoke nuisance;

(f) Where facilities include bulk storage facilities for organic liquids, such as petroleum, implement design features and install suitable controls to manage organic vapour emissions;

(g) Volatile liquids are pumped instead of poured.

(6) Waste management -

(a) Putrid or tainted organic materials should be stored in enclosed containers and refrigerated until removed from premises;

(b) The transportation of odorous wastes including sewage effluents, food processing waste, offal, manure or carcasses is in covered vehicles or containers/bins to minimise odours or dust emissions;

(c) Wastes are recycled and reused where possible. No wastes are burned as a disposal method, except where it can be demonstrated it is a form of energy recovery.

Appendix 2 - Methods to Minimise Impacts from Noise Emissions

(1) This is not an exclusive list but merely provides a range of examples for minimising noise emission impacts.

(2) Siting and design -

(a) Select an appropriate site for the use considering the proximity to sensitive receiving environments and the local meteorological conditions;
(b) Design site layout to ensure building openings, roads, parking areas and other major activities and operational areas are located away from current or future sensitive receiving environments;
(c) Where possible use the layout of the buildings, site infrastructure and natural topography as noise barriers;
(d) Where possible confine noisy processes to areas protected by enclosures or barriers;
(e) Locate noisy processes such as loading bays and entrances/exits away from sensitive receiving environments;
(f) Locate noise sources such as air compressors, pumps and similar in areas furthest from sensitive receiving environments, provide effective noise barriers or enclosures, and keep doors on enclosures closed when operating.

(3) Construction standards -

(a) Vehicle traffic areas are paved, have low gradients and are maintained in good condition;
(b) Install double-glazing to windows and sound locks to doors facing sensitive receiving environments;
(c) Buildings housing noisy operations, activities or equipment are constructed of suitable materials to reduce noise transmission such as ceilings and walls lined with sound absorbing material;
(d) Reduce structure-borne noise and vibration by mounting equipment on appropriate isolation systems designed by a specialist in this field.

(4) Operation standards -

(a) Install noise suppression devices to equipment according to the manufacturer's specifications and ensure the efficiency of these devices is maintained;
(b) Design and maintain adequate noise buffers between noise sources and sensitive receiving environments. In particular, install noise barriers such as screens around noisy equipment, operations and activities;
(c) Fit all diesel engines and noisy vehicles with efficient exhaust mufflers;
(d) Avoid installing machinery that may have humming or whirring components or impulses, or annoying tonal or hammering noises. If such machinery is installed, noise suppression devices are applied to mitigate potential nuisance;
(e) Fit effective inlet and exhaust silencers to air compressors and ensure that air pressure operated controls and air operated valves on silos and hoppers are equipped with silencers;
(f) Where possible, substitute equipment with an equivalent quieter/lower sound power level piece of equipment, for example, electric rather than diesel or air powered;
(g) Where possible replace alarms, horns and telephone bells with visual signs, mobile phones or pagers;
(h) Where blasting of rock or hard ground is involved, use technologies that minimise airblast overpressure and ground vibration.

(5) Noise management measures -

(a) Ensure that openings including windows and roller-doors facing sensitive receiving environments are kept closed and all unnecessary openings are sealed. Install signage to alert staff and/or visitors to their responsibilities to minimise the generation and propagation of unnecessary noise;
(b) Limit noisy routine operations to standard working hours of 7am to 6pm Monday to Friday, and 7am to 1pm Saturday. Noisy work should not be carried out on Sundays or public holidays, except where approved as part of the land use or another approval such as an activity under the *Environmental Protection Act 1994*;

(c) Conduct noisy activities at times when the likelihood for nuisance is minimised, for example, the middle of the day;
(d) Work outside of standard working hours is limited to quiet “finishing off” work and generally conducted within buildings;
(e) Limit vehicle movements, especially deliveries and truck movements, to standard working hours;
(f) Where possible, activities such as concrete pours are restricted to standard working hours. If activities are required to occur outside of these hours, affected premises are notified of the duration and times in advance of the event;
(g) Employ regular inspection and maintenance programs to ensure noise control fittings such as seals, doors and exhaust systems are in good working order and prompt attention is given to loose or rattling covers, worn bearings and broken equipment;
(h) Develop and implement an Environmental Management Plan including procedures for -
  (i) noise management;
  (ii) pollution prevention;
  (iii) staff training;
  (iv) customer education where applicable;
  (v) definition of roles and responsibilities;
  (vi) monitoring of performance;
  (vii) contingency actions.

Planning Scheme Policy 6 - Emerging Urban Community Structure Plans

6.1 Purpose

(1) The Emerging Urban Community Zone has been established to ensure that a co-ordinated and sustainable approach is taken to the integrated planning of each of the areas located within this zone. This policy is linked to the zone code by way of outlining the processes necessary for investigating issues and constraints, including those identified on the overlays, in the identified areas and subsequent determination of land uses and associated infrastructure. Only once the structure plan process outlined in the policy has been completed, will an amendment to the Redlands Planning Scheme identifying environmentally significant areas and urban and associated uses be commenced by the local government.

(2) Subsequently, the purpose of this policy is to -

(a) ensure urban development only occurs in accordance with comprehensive area planning and detailed site planning which -
- (i) achieves an orderly, integrated and co-ordinated development pattern;
- (ii) resolves any physical land constraints;
- (iii) ensures environmental values are identified, protected and all possible undesirable impacts mitigated;
- (iv) ensures infrastructure and services are available and can be staged economically to meet the demand and all required infrastructure corridors are identified and preserved;
- (v) achieves a significant contribution, generally in excess of 50 percent of the area, for open space purposes;
- (vi) identifies and provides sites for education, health and social facilities and other community infrastructure;

(b) outline the planning framework of preparing a structure plan for each of the identified areas within the Emerging Urban Community Zone through identifying the principles, elements and processes to be undertaken;

(c) draw together and integrate all the necessary components of the built and natural environment into a physical land use pattern for the area;

(d) provide a structure through which private sector development and public capital works may be co-ordinated to create an efficient and desirable urban form;

(e) provide the basis for the sound co-ordination of planning infrastructure investment, decision making and operational policy that involves an amendment of the Redlands Planning Scheme (RPS) to permit and facilitate future development;

(f) provide a framework for the co-ordination and integration of individual landowner activities ensuring that individual activities do not prejudice the broader goals for each area;

6.2 Applicabilit y

(1) This planning scheme policy -

(a) applies to all premises within the Emerging Urban Community Zone located at -
- (i) South East Thornlands;
- (ii) Kinross Road, Thornlands;
- (iii) South Bunker Road, Victoria Point;
- (iv) South west Point Lookout township, North Stradbroke Island;
- (v) North Dunwich township, North Stradbroke Island;

(b) supports the specific outcomes of the Emerging Urban Community Zone;
(c) outlines the necessary steps to complete a structure plan;
(d) identifies the principles and elements that are to be incorporated into the investigation and design of the area.

(2) Development identified on a structure plan completed in accordance with this policy will only be permitted once an amendment to the RPS has been completed.

6.3 Policy Outcome

(1) The outcome of this policy will be a structure plan and planning report for each of the areas zoned as Emerging Urban Community Zone.

Note -

- The structure plan will be completed in a co-ordinated manner for each of the identified areas above.
- Partial or fragmented structure planning over portions of each area will not be permitted. Additionally, investigations beyond the areas identified in the Emerging Urban Community Zone will only be allowed for the purpose of determining appropriate edge treatments relating to land uses and subsequent design treatments.
- Expansion of the Emerging Urban Community Zone is not part of the investigation process in completing a structure plan and subsequently not an intended outcome.

(2) Specifically the structure plan will provide outcomes in the following areas -

(a) open space - the development of a master planned approach to open space providing a balanced open space system for active and recreational pursuits. The location, activity and type of open space throughout the area will be identified. It is anticipated that 50 percent of the land included within each of the three areas included within the Emerging Urban Community Zone will be set aside and enhanced for open space purposes including being part of green space and environmental values enhancement and initiatives;

(b) pedestrian and cycle network - the identification of mobility networks within the area that integrate open space networks and transport networks to provide a highly connected community;

(c) traffic and transport - the identification of key movement corridors, the establishment of a desirable road hierarchy, and network upgrading to service the future population working and residing within each area. The traffic and transport plan will also address and ensure the timely provision for upgrading public transport services and networks to service each area;

(d) community and social infrastructure - the structure plan will identify, locate and provide key community infrastructure required for the community;

(e) water and sewerage - through close liaison with the local government infrastructure division, infrastructure requirements will be linked to the structure plan and Priority Infrastructure Plan (PIP) and ensure any out of sequence or bring forward costs are borne by the development(s);

(f) broad land use types and densities - the structure plan will determine the location and criteria for residential areas and other uses ensuring the provision of a comprehensive range of housing types and lot sizes to meet the needs of a wide cross section of the population;

(g) commercial or retail facilities - the structure plan will identify the level of commercial or retail facilities required for the area, where these facilities should be located, and ensure their timely provision;

(h) environmental management - the structure plan will identify and ensure the protection and where possible the enhancement of environmentally sensitive land and corridors while integrating the urban and natural elements of the environment throughout each area;

(i) design - the structure plan will contain criteria to ensure special quality and innovation in landscaping, streetscape treatment, infrastructure design, building design and construction;

(j) employment - provision within the development or clearly defined relationships between the development and nearby job opportunities, including identified journey-to-work arrangements.

6.4 Structure Plan Process

This policy promotes the use of an investigation by design process for completing a structure plan. Flow Chart 1 - Structure Plan Design Process describes each phase of the process. The chart also identifies the associated products and outcomes for each phase and the associated community consultation strategy.

Flow Chart 1 -Structure Plan Design Process

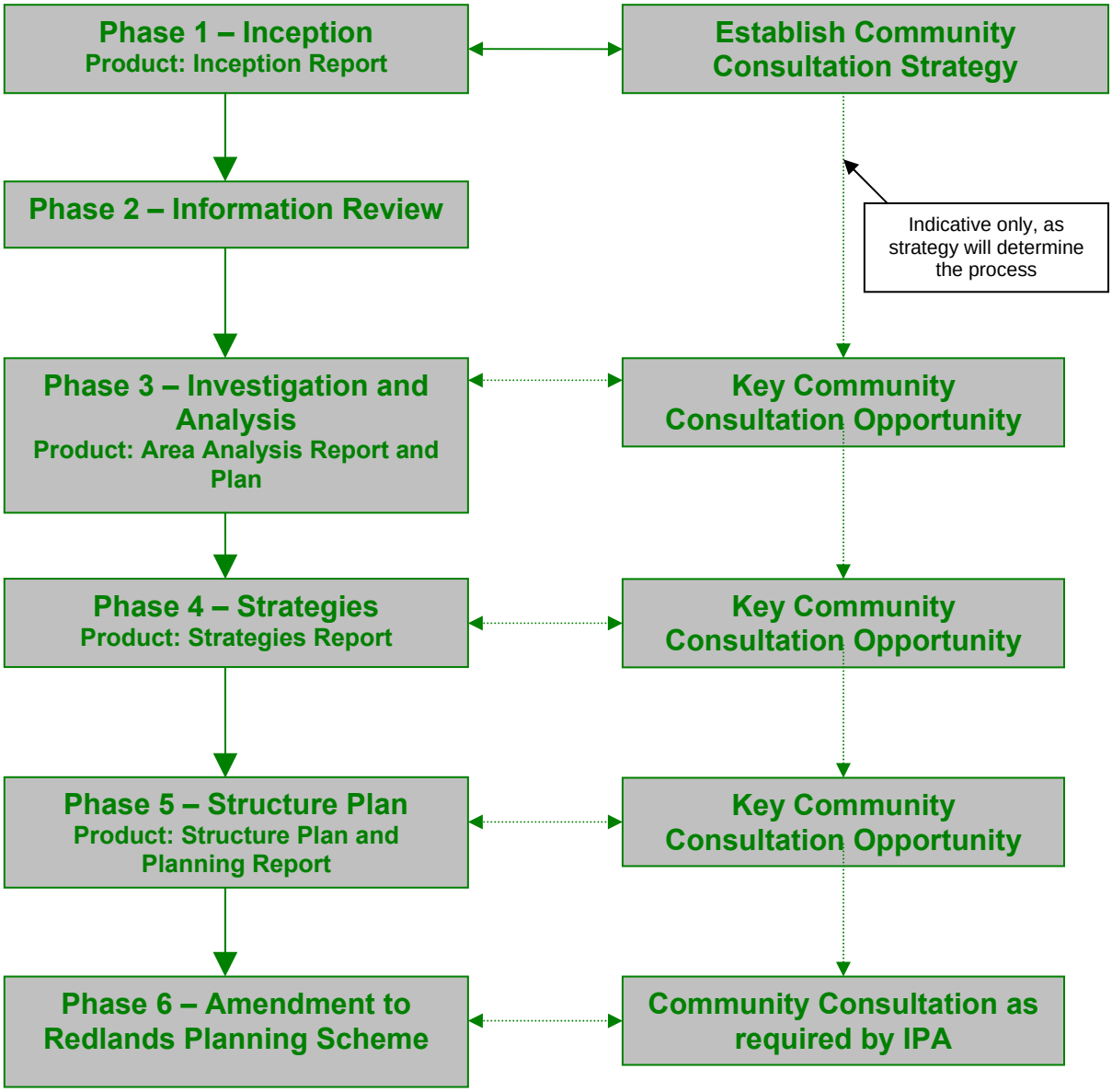

Note -

Refer to Section 6.7 for details of each of these phases.

6.5 Structure Plan Principles

(1) This section of the policy outlines a range of principles that will inform the structure plan process, particularly Phase 3 - Investigation and Analysis and Phase 4 - Strategies. The principles have been grouped in the following -

(a) Redland City Context Principles;

(b) Urban Design Principles.

6.5.1 Redland City Context Principles

(1) This section is intended to provide a broad perspective of the structure plan process. The local government supports the concept of integrated local area and structure planning to co-ordinate the planning by both the public and private sector for local communities in the City, based on the following principles -

(a) local areas and communities in the City differ in their historical, social, demographic, cultural, economic and ecological circumstances. Planning and design of emerging urban community areas should provide appropriate responses to the distinctive local circumstances of each area;

(b) analysis and design of emerging urban community areas will take a holistic view which links related physical, environmental, economic, social and cultural aspects of local communities, rather than treating these matters separately;

(c) the process will encapsulate a shared understanding of key issues amongst those concerned and responsible for the well being of local communities and those in the public and private sectors involved in the development of these communities;

(d) elimination of duplication and unnecessary gaps between public sector activities and programs to provide more effective and efficient use of available resources;

(e) community involvement in planning and management processes for local areas.

6.5.2 Urban Design Principles

(1) Urban design principles have been identified to assist in the development of the structure plan. The principles focus on both physical design of the area and the ongoing commitment required when developing an emerging community. The principles cover eight (8) key areas of community development, they include -

(a) places for people - places must be safe, comfortable, varied and attractive. They also need to be distinctive, offer variety, choice and fun. Vibrant places offer good opportunities for meeting places, street activity and casual surveillance;

(b) enrich the existing - development is to enrich the qualities of its context, meaning a design response that arises from and complements its setting;

(c) make connections - development needs to be easy to access visually and physically. This requires solutions as to how to get around by foot, bicycle, public transport and the car, in that order;

(d) work with the landscape - development that can strike a balance between the natural and man made environment can better utilise the area's intrinsic resources. Achievement in enhancement of open space (green space) values through habitat and corridor restoration, and waterways protection. The climate, landform, landscape and ecology provide the opportunity to maximise the energy efficiency and environmental responsiveness within the study area;

(e) mixed use and housing choices - stimulating, enjoyable and attractive places to meet the demands from the widest possible range of users, amenities and social groups. Housing

choice and range of affordability ensures a community can continue to mature and change due to the mix of household size and age;

(f) manage investment - for an area to be economically viable it must be well managed and maintained. This means understanding the market considerations and the changing household needs and expectations of new homeowners; and ensuring the quality of development that will strengthen new home owners' commitment to their growing community;

(g) design for change - new areas need to be flexible to respond to future changes in lifestyle and demography. This means designing for energy and resource efficiency, providing housing choice, public spaces and service infrastructure;

(h) environmentally responsive infrastructure provision - new areas need to ensure the timely, sequenced and sustainable provision of essential social and physical infrastructure. Infrastructure facilities and services need to be provided upfront in the initial stages of development while continuing to provide for increasing service demands as the local community grows.

6.6 Structure Plan Elements

(1) The determination of an appropriate urban form and development pattern is a critical element in the completion of a structure plan. Phase 4 takes the investigation and analysis of phase 3 and places the findings into a structure through the identification of strategies. These strategies will encompass the following elements that will then be transferred into the detailed structure plan. They have been grouped into -

(a) Urban Design Elements

(b) Urban Form Elements

6.6.1 Urban Design Elements

(1) Development within the study area is to be encouraged to adopt innovative design solutions as standard approaches to new development. Innovative solutions may include -

(a) alternative subdivision pattern, such as cluster housing or group title;

(b) common trenching for services;

(c) "green street" principles;

(d) one way cross fall roads;

(e) water sensitive and energy design principles;

(f) non-standard footpath profiles;

(g) increased traffic volumes on roads with lot access;

(h) alternative schooling facilities.

(2) Innovative design solutions facilitate the following urban design elements -

(a) walkable communities - locate increased densities around mixed use centre, creating the critical mass that will result in the creation of nodal centres that offer better facilities and services for the community;

(b) highly connected communities - design a pattern of development that is highly connected with the provision of pedestrian and cycle paths that link the community with facilities and activities;

(c) safe and legible - ensure patterns of development locate paths and linkages in areas that are highly visible and understood;

(d) mixed use development - ensure development provides a range of uses and activities that will provide the structure that can adapt to a changing community;

(e) housing choice - ensure the settlement pattern provides for a diverse range of housing types and housing forms;

(f) quality open space - create open space that is of a high quality to best meet the needs of the community and is well integrated with open space networks;

(g) design with regard to the topography - ensure the pattern of development can be achieved in relation to the existing topographical constraints. Design solutions to minimise large excavation and fill areas required for earthworks of roads or lots.

6.6.2 Urban Form Elements

(1) An important outcome of a structure plan is guidance for a desirable built form appropriate to the study area. Typically, new building development for the area is to integrate the following elements -

(a) design for climate - create a building form that responds to local conditions and ensure design allows for aspect, solar orientation, prevailing breezes, natural light and weather protection;

(b) design for privacy - ensure building design is appropriately sited and designed to provide maximum privacy for residents;

(c) design for slope - adopt an approach to built form that responds and identifies the best built form solution for the land. Minimise excessive excavation and fill solutions;

(d) create interesting and varied landscapes - streetscape design should be considered to include road design, car parking design, landscape treatments, street trees, pedestrian and cycleways, façade variation, building form setback, building mass and individual entrances to developments;

(2) These elements may be incorporated into strategies using the following structure -

(a) open space - includes community open space, environmentally significant open space, open space linkages and regional open space corridors;

(b) pedestrian and cycle network - completion of a mobility network identifying existing and future road corridors, open space corridors and future road networks;

(c) traffic and transport - existing road infrastructure, future road extensions and upgrades, and public transport options;

(d) water and sewerage - existing and required infrastructure, and sequencing of infrastructure;

(e) broad land use types and densities - location and design criteria for existing and proposed housing types;

(f) commercial facilities - determine the type, scale, location and design criteria of facilities, and catchment required. Facilities are to complement the network of centres in the City;

(g) community facilities - determine the provision sequence, timing and funding of required community facilities. Specify location and design criteria;

(h) environmental management - identification, protection and enhancement of environmentally significant areas including areas of bushland, corridors and foreshores and waterways;

(i) design - design criteria for matters such as landscaping, streetscape treatment, infrastructure design, building design and construction;

(j) employment - identification of employment opportunities within the area or clearly defined relationships between the development and nearby job opportunities, including identified journey-to-work arrangements.

6.7 Structure Plan Components

(1) The structure plan will ultimately be implemented through an amendment to the Redlands Planning Scheme.

(2) Refer to Table 1 - Structure Plan Components below -

Table 1 - Structure Plan Components

Stage	Components	Product
Inception	■ Background ■ Structure plan area ■ Purpose or objectives ■ Methodology ■ Consultation strategy	**Inception Report**
Information Review	■ Existing documentation ■ Information gaps	
Opportunities and Constraints Analysis	■ Opportunities ■ Constraints ■ Incorporation of urban design principles	**Area Analysis Report and Plan**
Strategies	■ Identifies elements of local strategies for each area	**Strategies Report**
Structure Plan	■ Translation of strategies into design ■ Structure plan map/s	**Planning Report and Structure Plan** Identifying required amendments to the Redlands Planning Scheme. This may include amendments to the zoning, definitions, codes, schedules and policies.

6.8 Consultation

The establishment of an Emerging Urban Community Zone raises many questions from all sectors of the community. Consultation is an essential element in completing a structure plan and requires the completion of a consultation strategy. Refer to Planning Scheme Policy 2 - Community Consultation for further information.

this page purposely
left blank

Planning Scheme Policy 7 - Flood Prone, Storm Tide and Drainage Constrained Land

7.1 Purpose

(1) The purpose of this policy is to -

(a) set out the requirements for the preparation and submission of technical reports and/or flood studies associated with development applications affected by the Flood Prone, Storm Tide and Drainage Constrained Land Overlay and lots subject to significant stormwater overland flow and/or inundation;

(b) provide information relating to development within the Flood Prone, Storm Tide and Drainage Constrained Land areas or lots subject to significant stormwater overland flow and/or inundation.

7.2 Applicabilit y

This policy applies to all development applications on land affected by the Flood Prone, Storm Tide and Drainage Constrained Land Overlay Map and Code and lots subject to significant stormwater overland flow and/or inundation.

Note -

In some instances the local government may have undertaken detailed flood survey or have on record a flood study for the site that has been undertaken by a suitably qualified person. Contact the local government to verify if this information is available.

7.3 Methodology Used for the Creation of the Flood Prone Storm Tide and Drainage Constrained Overlay

(1) Flood prone areas were created by -

(a) the identification of natural floodwater routes using local government maps showing 0.5 metre contours at a scale of 1:5000. In many cases, this mapping was examined at a much larger scale on computer;

(b) verification of results included the use of the local government 2002 aerial photography, local government recorded flood studies, which were done by various Engineering consultants, or local government engineers. Also used was various Council Officers' local knowledge extending back to the 1974 flood;

(c) the storm tide areas were generated based on the 0.5 metre contour mapping by Council's GIS staff;

(d) the Southern Moreton Bay Islands flood identification was determined by the engineering consultant, Gutteridge Haskins and Davey (GH&D) in 1998. This information has been upgraded at many locations by the local government and (GH&D) since 1998.

7.4 Flood Prone and Storm Tide Lots

7.4.1 Lots Subject To Flooding

(1) An application involving a lot that is identified on the Flood Prone, Storm Tide and Drainage Constrained Land Overlay or is subject to significant stormwater flow and/or inundation will require an assessment that identifies the discharge, extent, depth and velocity of flow. Flow is simulated

in accordance with the methods recommended in the *Queensland Urban Drainage Manual* (QUDM) and *Australian Rainfall and Runoff* (AR&R).

(2) Information submitted to the local government is to include -

(a) a contour plan with levels to AHD at 0.25 metre contours;

(b) location of the calculated 1 percent Annual Exceedance Probability (AEP) 100 year Average Recurrence Interval (ARI) flood line across the site;

(c) location of the calculated 50 percent AEP (2 year ARI) and 10 percent AEP (10 year ARI) flood lines on land which is proposed for dedication to the local government for park;

(d) location of any existing and/or proposed buildings on the lot;

(e) submission of a hard copy flood modeling report prepared by a Registered Professional Engineer (Queensland) including relevant computer software data files that are compatible with the local government's software to enable checking of data.

7.4.2 Lots Subject To Storm Tide

(1) An application involving a lot identified on the Flood Prone, Storm Tide and Drainage Constrained Land Overlay will require an assessment that identifies the extent of the 1 percent AEP (100 year ARI) storm tide inundation.

(2) Information submitted to the local government is to include -

(a) a contour plan with levels to AHD at 0.25 metre contours;

(b) location of the 1 percent AEP storm tide line (RL 2.4 metre AHD) on the lot;

(c) location of the highest astronomical tide line (if applicable) on the lot and vegetation below this level;

(d) location of any existing and or proposed buildings on the lot;

(e) the likely impact of the proposed development, particularly in terms of the effect on adjoining lots;

(f) extent of excavation and fill including any associated earthworks;

(g) likely impact in terms of foreshore bank stability and type of protection proposed (if any).

7.5 Drainage Constrained Land on Southern Moreton Bay Islands

7.5.1 Lots Subject To High Water Table, Seepage and All Weather Access Problems

(1) During extended wet weather periods, lots are to have acceptable all weather roadway access to the site, immunity from high water table and be free from significant seepage problems. The suitability of the location is ascertained by a Registered Professional Engineer (Queensland) competent in regard to these matters.

(2) Lot stormwater drainage conforms to *AS3500, Parts 3.1 - National plumbing and drainage - Stormwater drainage - Performance requirements (1998*) and *3.2 - National plumbing and drainage - Stormwater drainage - Acceptable solutions (1998*). Testing of soil samples are by a National Association of Testing Authorities (NATA) registered materials tester using methods described by the Standards Association of Australia.

(3) Information submitted to the local government is to include -

(a) a contour plan with levels to AHD at 0.25 metre contours;

(b) location plan showing existing contributing stormwater catchment and future catchment where applicable;

(c) description of soil layers to a depth of 1.2 metres;

(d) location, depth, width and velocity of calculated stormwater overland flow;

(e) location of dwelling and other buildings proposed on site.

(4) Remedial works information should show proposed works to solve -

(a) all weather access problems;

(b) seepage problems (stormwater and wastewater);

(c) problems associated with a high water table.

7.6 Flood Modelling and Analysis

7.6.1 Introduction

(1) The following requirements detail the minimum acceptable design criteria for determination of hydrological and hydraulic performance of waterways including -

(a) the extension of existing constructed channels, where deemed necessary;

(b) structures associated with constructed channels;

(c) documentation required for submission to the local government.

(2) This policy is not intended as a comprehensive document on open channel design or of the requirements of the local government, but a compilation of minimum standards incorporated or used to determine an acceptable design.

(3) Notwithstanding the design criteria set out in QUDM, AR&R or this policy, the local government may set alternative criteria for individual developments, or restrict or allow alternative and innovative solutions that can be supported by well documented and criticised research. Designs of this nature will be subject to determination by the local government.

(4) Appropriate approvals from relevant State Government Departments are obtained prior to works in the vicinity of or affecting watercourses as defined and controlled by the Department of Natural Resources, Mines and Energy.

(5) Applicable guidelines include -

(a) *Natural Channel Design Guidelines* - Brisbane City Council, December 2000;

(b) *The Constructed Wetland Manual Volume 1 and 2* - Department of Lands and Water Conservation NSW, 1998;

(c) *Stormwater Outlets in Parks and Waterways* - Brisbane City Council, Version 2, 2003;

(d) *Road Drainage Design Manual* - Queensland Main Roads Department, 2003.

7.6.2 Hydrological Analysis

(1) Stream flow is simulated in accordance with the methods recommended in QUDM and/or AR&R.

(2) Hydrological models are to account for all existing and future stream and catchment development.

(3) Model parameters are determined by calibration against past flood events and by recognised AR&R regional relationships.

(4) Calibration includes all major flooding events with recorded flood level information.

(5) Calibration models accurately reflect the existing development during the event.

(6) Flood analysis by accepted flood modeling techniques are carried out to determine the worst flooding scenario for the particular flood frequency in concern.

7.6.3 Hydraulic Analysis

(1) Flood levels are simulated in accordance with the methods recommended in QUDM and AR&R.

(2) Cross section information used in hydraulic calculations is based on a recent survey of the waterway or foreshore at sufficient detail to accurately model the terrain.

(3) Survey is to Australian Height Datum (AHD).

(4) Roughness coefficients are determined from calibration and published upper bound guidance values and accurately reflect terrain conditions.

(5) Hydraulic gradients are determined from surveyed flood levels or cross-sections up and downstream of the job site.

(6) Flood levels for a particular Annual Exceedance Probability (AEP) are determined from the design storm that yields the highest water level prediction.

(7) Final electronic hydrology and hydraulic calculations are provided to the local government on hard copy and CDROM.

7.6.4 Natural Drainage Lines and Flood Plains

(1) As stated in the planning scheme, it is the local government's intention that waterways and foreshores, flood plains and significant natural drainage lines are retained for environmental purposes.

(2) Natural vegetation is maintained in all natural drainage lines, waterways, foreshore areas and flood plains.

(3) Natural drainage lines are preserved in their natural state, except at a pipe outlet which is to have provision for erosion protection and disposal of stormwater into a natural or formed wide sheet flow. Refer *Stormwater Outlets in Parks and Waterways* (Brisbane City Council, Version 2, 2003).

7.6.5 Constructed Channels

(1) Low flow pipes and low flow channels are not favoured as they interfere with the natural hydrological balance and destroy the natural aquatic ecosystems.

(2) A constructed channel may be approved by the local government for extensions where similar infrastructure exists.

(3) Artificial open channels are to comply with the requirements of the local government. Refer to *Natural Channel Design Guidelines* (Brisbane City Council, December 2000).

(4) Bed and batters are planted with suitable grasses in topsoil of sufficient depth, quality and compactness to maintain 100 percent grass cover under all channel flows. This should be achieved if bed and batters are top soiled to a minimum depth of 100mm of a quality and texture to remain productive under all moisture conditions and grassed with an approved mixture consisting primarily of couch (cynodon dactylon), kikuyu and pangola grass, together with a rapidly establishing nurse crop. The specification in all cases includes the provision for watering,

fertilising and general management until 80 percent grass cover in every 10 square metres has been obtained and continued maintenance for the specified period of maintenance.

(5) In areas where local high velocities will be experienced and where average stream velocities will exceed acceptable velocities, additional measures are undertaken to protect the bed and batters against erosion. Such measures may include an approved grass anchoring system.

(6) In areas subject to tidal influence, alternative surfacing to grass may be provided. Such surfaces are to take into consideration the need to exclude vermin such as rats from the constructed channel and banks in the vicinity of the high water mark. For the purposes of this clause the defined lower limit for the provision of grass covering to the requirements of the previous clause is 1.6 metre AHD.

(7) Channel design is to comply with the following criteria -

(a) maximum permissible average flow velocity in consolidated bare earth and vegetated channels is to comply with the lower of the tabulated values for -
(i) easily erodable soils in QUDM;
(ii) poor grass cover in AR&R;

(b) maximum Froude number is less than 0.9, and supercritical flow is not acceptable;

(c) Manning's 'n' values are determined from the sources recommended in QUDM and published upper bound guidance values are adopted;

(d) velocity and Froude number calculations are to include several stream flow events from a 50 percent AEP (2 year ARI) to 1 percent AEP (100 year ARI) storm event;

(e) channel design is to minimise erosion potential;

(f) the minimum centerline radius of bends in channels is not less than four times the width of flow of a 1 percent AEP (100 year ARI) flow at that location;

(g) the maximum angle of deflection of the channel between the straight reaches upstream and downstream of the curve is not to exceed 60°;

(h) the channel is straight both upstream and downstream of all curves for a distance in each case equivalent to at least the radius of the curve.

(8) Access to channels is provided for maintenance equipment.

this page purposely
left blank

Planning Scheme Policy 8 - Housing

8.1 Purpose

(1) The purpose of this policy is to -

(a) set out the requirements for the following plans that are associated with development applications for forms of housing -
(i) site development plans;
(ii) site analysis plans;
(iii) streetscape analysis;
(iv) landscape plans;
(v) shadow diagrams;

(b) identify the supporting information required for specific forms of housing.

8.2 Applicabilit y

This policy applies to all development applications under the planning scheme that involve some form of housing development. Some forms of supporting information may not be required for certain types of development, that is it unlikely that a shadow diagram will be required for a dwelling house that is less than 8.5 metres in overall height and is located on a lot greater than 500m^2. Requirement or supporting information can be confirmed by the local government.

8.3 General Requirements for All Housing

8.3.1 Site Development Plan

(1) Site development plan at a scale of not less than 1:100 with dimensions indicating -

(a) entrance points to the dwelling units;

(b) private open space areas;

(c) external storage space;

(d) on-site parking and access, including turning-circle diagrams to demonstrate compliance with *Australian Standard 2890.1:2004 Parking facilities - Off-street car parking* and *Australian Standard 2890.2:2002 - Off-street commercial vehicle facilities*;

(e) clothes drying areas;

(f) fencing;

(g) side, rear and frontage setbacks;

(h) preliminary stormwater drainage design including both underground and overland flows;

(i) existing and proposed contours, with nominated site datum relative to AHD.

(2) Elevation drawings at a scale of not less than 1:100 with dimensions indicating -

(a) major elevations, noting colours and finishes of building materials;

(b) the relationship of the elevations to natural ground level, showing any proposed cut and fill;

(c) cross-sections of the building showing the relationship to existing and proposed topography.

8.3.2 Site Analysis Plan

(1) A site analysis plan is required with all applications for assessable housing developments within the planning scheme area.

(2) The intent of a site analysis is to require the applicant to demonstrate an appreciation of the premises and its context, as well as identify opportunities and constraints for the layout and design of the premises. Given the design constraints associated with some premises, a detailed and comprehensive site analysis should form the basis from which dwelling design is achieved. A site analysis plan should be completed prior to designing the development.

(3) The checklist provided below is not intended to be exhaustive. The attributes and issues of the site will determine the extent of information necessary for the preparation of a site analysis plan.

(4) It is essential in the development of a site analysis plan that it details the context of the site.

Table 1 - Checklist of Site Analysis Information Requirements

Checklist
■ North point.
■ Drawn to the required scale. Refer to site development plan requirements.
■ Full real property description of the land and adjoining lots.
■ Site size and the dimensions of all boundaries of the premises.
■ Description of zones of adjoining and adjacent premises.
■ Location, width and purpose of all existing easements or encumbrances, including right of ways.
■ Site location plan that provides a suitable context and in particular identifies adjoining and adjacent landuses and describes their scale, form and orientation with respect to the premises.
■ Description of present and past land uses.
■ Location of any existing buildings, fences and other improvements to the land, including utilities and drainage infrastructure.
■ Description of adjoining road/s, including their category, pedestrian and cycle paths.
■ Location of any driveways to the land and to adjoining and adjacent lots.
■ Any significant views to or from the land.
■ Direction of prevailing winds or breezes.
■ Summer and winter sun paths.
■ External noise, air or electromagnetic pollutant sources that may affect the premises.
■ Contours at 0.25 metre intervals. Where the site is greater than 2,000m^2 illustrate contours at 0.5 metre intervals.
■ Slope analysis, which illustrates land that is 1 in 5 or steeper, 1 in 5 to 1 in 10, 1 in 10 to 1 in 20, and less steep than 1 in 20. This information will vary depending on the premises.
■ Natural stormwater flow paths.
■ The line, bank and high water mark of any existing water bodies, permanent or intermittent waterways or wetlands within or adjoining the premises.
■ Flood-prone land at 1, 20 and 100 percent AEP, within and adjoining the premises.
■ Bushfire hazard zones within or adjoining the premises.
■ Contaminants present on the premises.
■ Acid sulfate soils, present or potential, on the premises.
■ Geotechnical information relating to soil types and permeability.
■ Where the site will require on-site wastewater treatment, soil testing complies with *Australian Standard 1547:2000 - On-site domestic wastewater management.*
■ Any native plants on the premises, the height, diameter and canopy cover and whether the native plants have any ecological, landscape or habitat values.
■ Items of topographic, landscape or scenic interest that exhibit one or more of the following characteristics - ‣ is important to the scenic quality of the local government area; or ‣ establishes the scenic character and identity of the local area because it contains - ▪ a rare or uncommon landscape, such as a ridgeline, escarpment or headland; or ▪ a good representative example of natural landscape types common in the local area, such as a foreshore associated with a waterway; or ‣ visually screens inharmonious, intrusive or unattractive development and/or movement systems.
■ Items listed in Part 9 - Schedule 4 - Heritage Place Register, whether built, natural or indigenous.

Diagram 1 - Example of Site Analysis Plan

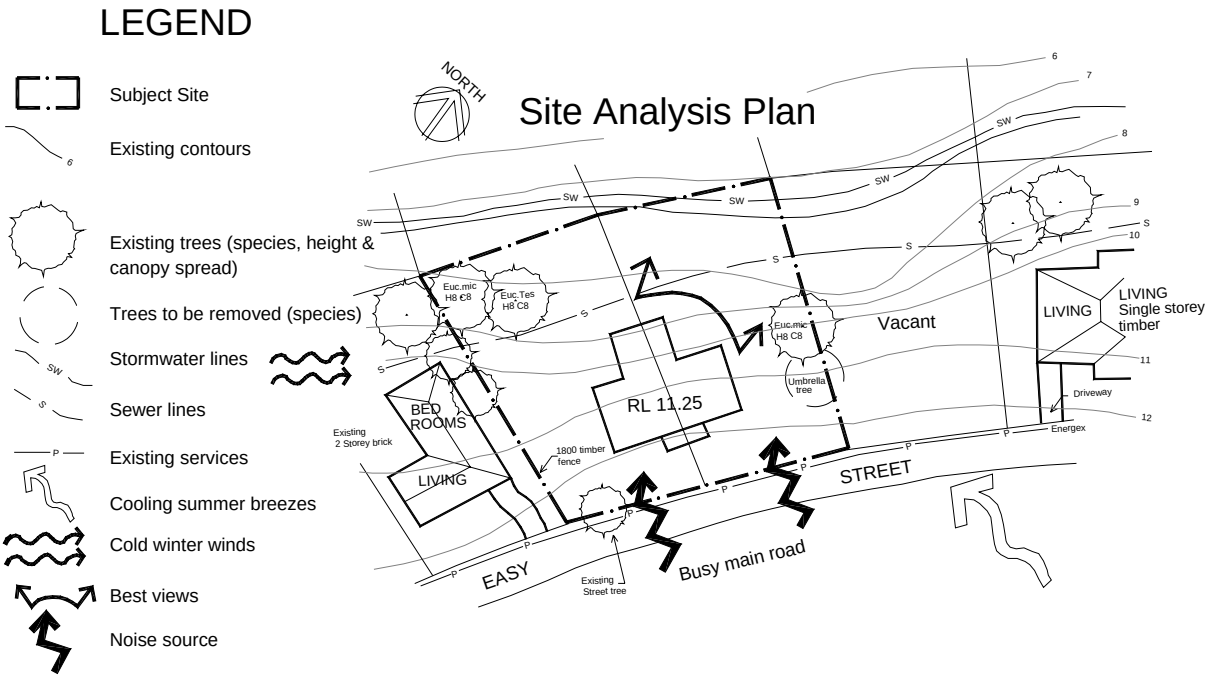

8.3.3 Streetscape Analysis

(1) The intent of this analysis is to provide documentation that illustrates the existing streetscape character and demonstrates how the proposed development recognises and complements this character.

(2) The analysis should include -

(a) pavement and verge widths;

(b) location of garages and driveway access points in the street vicinity;

(c) type and height of fencing to street;

(d) details of the dominant building types in the locality as well as the scale, form, height, roof pitch, window and door proportions, verandahs and eaves and front setbacks in the vicinity.

Note -

In the majority of cases this can be achieved through colour photographs.

(3) Colour photographs of the surrounding streetscape should show -

(a) development either side of the proposed dwelling;

(b) four buildings directly opposite the site;

(c) a panoramic view looking in both directions from the proposed dwelling(s);

(d) views of promontories from Moreton Bay.

8.3.4 Landscape Plan

(1) The landscape design shows -

(a) proposed site contours and reduced levels at embankments and retaining walls;

(b) existing vegetation and proposed planting and landscaping, including proposed species;

(c) general arrangement of hard landscaping elements on and adjoining the premises;

(d) location and width of all entries and pathways;

(e) location of shade and deciduous trees;

(f) location and design of communal facilities;

(g) proposed lighting arrangements;

(h) proposed maintenance and irrigation systems;

(i) fencing design.

8.3.5 Shadow Diagram

(1) Shadows cast by buildings can deprive adjacent residential buildings and sites from sunlight penetration for a considerable period of the day. This effect varies, depending on the location of the buildings and the time of the year. Sunlight penetration is part of the overall amenity of a residential site. Submission of shadow diagrams may be required for a proposed development in order to assess the possible detriment to the amenity of adjacent residential buildings and sites.

(2) The side and rear boundary clearances, as required in the planning scheme, are intended to provide windows of habitable rooms with sunlight for at least 3 hours between 9am and 5pm on June 21st. In some cases of particular building form or sloping land, amenity in respect of sunlight penetration is detrimentally affected.

(3) The submission of shadow diagrams is necessary for any assessable development, where it exceeds 2 storeys or 8.5 metres in height in the following situations -

(a) adjacent to residential development or residential zone land, park, public places, pedestrian plaza; or

(b) sufficiently close to the areas mentioned in (a) to be likely to cast shadows over the area for a significant part of the time between 9am and 5pm on June 21st.

(4) The shadow diagrams should indicate the extent of the shadows cast by the proposed buildings or structures at any time or times of the day, for any day or days of the year including at least those for 10am, noon and 2pm on 21st June.

(5) In the instance where the amenity of another premises is detrimentally affected, the application may be refused or approved subject to conditions limiting the height or bulk of a building or other structure or requiring its relocation on the premises.

8.4 Aged Persons Housing

8.4.1 Emergency Services Planning

(1) Emergency services are provided by -

(a) buttons or similar devices linked to a 24 hour emergency call service, installed in each individual dwelling unit;

(b) emergency warning systems provided in communal facilities;

(c) multi-storey buildings being designed to allow emergency evacuation able to accommodate an occupied stretcher from any floor.

(2) The retirement village has an emergency evacuation plan approved by the Queensland Ambulance Service (QAS).

(3) The office must maintain a register containing information on residents to minimise the response time in case of an emergency.

(4) A qualified medical practitioner exists on-site or is available on a 24-hour call basis within 30 minutes response time.

(5) QAS is to be within a 10 minute response time of the site.

this page purposely
left blank

Planning Scheme Policy 9 - Infrastructure Works

Contents

Chapter 1 - Introduction

9.1.1 General
9.1.2 Purpose
9.1.3 Applicability
9.1.4 Interpretation

Chapter 2 - Documentation and General Conditions

9.2.1 Purpose
9.2.2 Applicability
9.2.3 Application Requirements
9.2.4 Plan and Document Presentation
9.2.5 Design Plans
9.2.6 Information Required for On-Maintenance
9.2.7 Survey Control
9.2.8 Design Calculations
9.2.9 Manuals for Mechanical and Electrical Equipment
9.2.10 General Conditions of Development
9.2.11 Further Advice

Chapter 3 - Reconfiguration

9.3.1 Purpose
9.3.2 Applicability
9.3.3 Reconfiguration Design Process
9.3.4 Phase 1 - Site Analysis
9.3.5 Phase 2 - Structure Plan
9.3.6 Phase 3 - Subdivision Plan
9.3.7 Phase 4 - Development Envelopes
9.3.8 Phase 5 - Building Design Drawing
9.3.9 Phase 6 - Property Management Plan
9.3.10 Phase 7 - Construction Management Plan

Chapter 4 - Erosion Prevention and Sediment Control

9.4.1 Purpose
9.4.2 Applicability
9.4.3 General
9.4.4 Stormwater Management
9.4.5 Erosion and Sediment Control Plan
9.4.6 Information Requirements
9.4.7 Permanent Methods of Waterway and Stormwater Management
9.4.8 Temporary Methods of Waterway and Stormwater Management
9.4.9 Maintenance of Waterway and Stormwater Management Measures

Chapter 5 - Road and Path Design

9.5.1 Purpose
9.5.2 Applicability
9.5.3 Road Function, Width and Movement Network Design
9.5.4 Street and Road Types
9.5.5 Road Naming Guideline
9.5.6 Street Layout Requirements

9.5.7 Standard Road Widths
9.5.8 Road Design Safety
9.5.9 Geometric Design Standards for Roads
9.5.10 Road Infrastructure
9.5.11 Pavement Design
9.5.12 Un-Signalised and Signalised Intersections
9.5.13 Clearing and Earthworks
9.5.14 Pedestrian and Bicycle Paths

Chapter 6 - Stormwater Management

9.6.1 Purpose
9.6.2 Applicability
9.6.3 Legislative Framework
9.6.4 Standards
9.6.5 Roof and Inter-lot Drainage
9.6.6 Minor Drainage System Design
9.6.7 Major Stormwater Management Systems
9.6.8 Environmentally Sensitive Soil Areas

Chapter 7 - Water Reticulation

9.7.1 Purpose
9.7.2 Applicability
9.7.3 General
9.7.4 Customer Demand
9.7.5 Elevated Areas
9.7.6 Alignment
9.7.7 Existing Mains
9.7.8 Crossing Existing Main Roads and Railways
9.7.9 Pipe Sizes and Multiple Feed Reticulation
9.7.10 Backfill Material Under Roads
9.7.11 Fire Hydrants
9.7.12 Deviation of Mains
9.7.13 Valves
9.7.14 Tees
9.7.15 Dead Ends and Culs-de-Sac
9.7.16 Connections and Conduits
9.7.17 Markers
9.7.18 Water Meters
9.7.19 Preferred Materials
9.7.20 Construction Accuracy
9.7.21 Pressure Testing
9.7.22 Bacteriological Testing and Disinfection
9.7.23 As-Constructed Information

Chapter 8 - Sewerage Reticulation

9.8.1 Purpose
9.8.2 Applicability
9.8.3 General
9.8.4 Location of Sewers
9.8.5 Connection Branches
9.8.6 Minimum Grades and Cover
9.8.7 Materials
9.8.8 Maintenance Structures
9.8.9 Inspection and Maintenance
9.8.10 Existing Sewers
9.8.11 Existing Dwelling Units
9.8.12 Pumping Stations and Pressure Mains

Chapter 9 - Electrical Reticulation and Street Lighting

9.9.1 Purpose
9.9.2 Applicability
9.9.3 General
9.9.4 Electrical Reticulation
9.9.5 Street Lighting

Chapter 10 - Parks and Open Space

9.10.1 Purpose
9.10.2 Applicability
9.10.3 General
9.10.4 Definitions and Functions of Parks and Open Spaces
9.10.5 Open Space Land Characteristics
9.10.6 Specific Park Characteristics
9.10.7 Outdoor Equipment and Public Facilities
9.10.8 Selective Clearing and Leveling
9.10.9 Earthworks
9.10.10 Topsoiling and Grassing
9.10.11 Fencing/Bollards
9.10.12 Pedestrian and Cycle Paths
9.10.13 Vehicle Access Parking and Circulation
9.10.14 Signage
9.10.15 Power, Water Supply and Sewerage
9.10.16 Landscape Features and Elements
9.10.17 General Park Treatment
9.10.18 Maintenance and Drainage

Chapter 11 - Landscaping

9.11.1 Purpose
9.11.2 Applicability
9.11.3 Application Requirements
9.11.4 Amendments
9.11.5 Process Flowchart
9.11.6 Process
9.11.7 Heritage Places
9.11.8 Habitat Protection Overlay Code
9.11.9 Works on Public Land
9.11.10 Pre-construction
9.11.11 Completion and Maintenance Period

Chapter 12 - Excavation and Fill

9.12.1 Purpose
9.12.2 Applicability
9.12.3 Application Requirements
9.12.4 Geotechnical Report
9.12.5 Calculating Slope from a Topographic Map
9.12.6 Excavation and Fill Testing
9.12.7 Clearing
9.12.8 Contaminated Land

Chapter 13 - Development Near Underground Infrastructure

9.13.1 Purpose
9.13.2 Applicability
9.13.3 General Requirements
9.13.4 Location of Class 1 to 10 Buildings, Structures and Special Structures
9.13.5 Footing Loadings
9.13.6 Soil Properties
9.13.7 Alterations, Repairs, Relocations or Replacements to Utility Infrastructure
9.13.8 New Utility Infrastructure Installations

Chapter 14 - Domestic Driveway Crossover

9.14.1 Purpose
9.14.2 Applicability
9.14.3 Location and Design

Chapter 15 - Access and Parking

9.15.1 Purpose
9.15.2 Applicability
9.15.3 On-Street Parking
9.15.4 Off-Street Parking
9.15.5 Driveway Location
9.15.6 Driveway Crossover Design
9.15.7 Internal Accessways
9.15.8 Internal Lot Accessways
9.15.9 Queuing
9.15.10 Vehicle Parking Areas and Structures
9.15.11 Servicing and Manoeuvring Areas

Chapter 16 - Waste Management

9.16.1 Purpose
9.16.2 Applicability
9.16.3 Waste Storage - Residential
9.16.4 Waste Storage - Centre or Industrial
9.16.5 Waste Storage - Mixed Use
9.16.6 Waste Servicing
9.16.7 Waste Container Cleansing
9.16.8 Waste Reduction During Construction
9.16.9 Preparation of Waste Management Plans

Appendix 1 - Local Government Standard Drawings

R-RSC-1 Index for Roads/Streets Standard Drawings
D-RSC-1 Index for Drainage Standard Drawings
W-RSC-1 Index for Water Standard Drawings
S-RSC-1 Index for Sewerage Standard Drawings
P-RSC-1 Index for Parks Standard Drawings
G-RSC-1 Index for General Standard Drawings

Chapter 1 - Introduction

9.1.1 General

(1) This document prepared by local government comprises the Infrastructure Works Planning Scheme Policy (the "policy").

(2) The policy has been prepared for the guidance of consulting engineers, surveyors, landscape architects and planners engaged in the preparation of development proposals, and engineering plans and specifications for developments within the local government area.

(3) It is anticipated that by clearly setting out the design criteria for such works, time and effort will be saved on the part of both designers and Council staff by reducing the necessity for examination and amendment of submitted designs.

(4) The policy is used as a minimum standard and wherever possible a higher design standard will be adopted except where maximum requirements are stated.

9.1.2 Purpose

(1) The purpose of the policy is to convey the local government's position regarding infrastructure works by -

(a) stating specifications and standards for works, including those associated with reconfiguring a lot, making a material change of use, and building or operational works which meet the overall outcomes set out in the Infrastructure Works Code and elsewhere in the planning scheme. Specifications and standards are contained in the following chapters -

(i) Chapter 2 - Documentation and General Conditions;
(ii) Chapter 3 - Reconfiguration;
(iii) Chapter 4 - Erosion Prevention and Sediment Control;
(iv) Chapter 5 - Road and Path Design;
(v) Chapter 6 - Stormwater Management;
(vi) Chapter 7 - Water Reticulation;
(vii) Chapter 8 - Sewerage Reticulation;
(viii) Chapter 9 - Street Lighting and Electrical Reticulation;
(ix) Chapter 10 - Parks and Open Space;
(x) Chapter 11 - Landscaping;
(xi) Chapter 12 - Excavation and Fill;
(xii) Chapter 13 - Development Near Underground Infrastructure;
(xiii) Chapter 14 - Domestic Driveway Crossovers;
(xiv) Chapter 15 - Access and Parking;
(xv) Chapter 16 - Waste Management;
(xvi) Appendix 1 - Local Government Standard Drawings;

(b) providing information and advice about IDAS processes as they relate to the design and construction of infrastructure works;

(c) providing information and advice to applicants, consultants and contractors to facilitate the carrying out of infrastructure works that efficiently achieve the outcomes sought by the policy;

(d) identifying related requirements of the local government, including local laws.

(2) The policy does not identify all related procedural requirements or all related local laws, regulations or Acts.

Notes -

- The reader should note that other legislation operates independently of the policy, planning scheme, or Act. It is not necessary to identify other legislation in this policy for that other legislation to have effect.
- The local government is not responsible for identifying legislation applying to particular development projects other than in accordance with the obligation of an Assessment Manager under IDAS.

9.1.3 Applicabilit y

(1) This policy functions as part of the Integrated Development Assessment System (IDAS) under the *Integrated Planning Act 1997* (IPA).

(2) The policy provides supporting requirements to assist in achieving specific outcomes within the Redland Planning Scheme (the “planning scheme”) and is read in conjunction with the planning scheme.

9.1.4 Interpretation

(1) Part 9 - Schedule 3 - Dictionary defines particular words used in the policy.

(2) The reference in this policy to other standards and manuals is taken as a reference to the latest revision unless otherwise stated.

Chapter 2 - Documentation and General Conditions

9.2.1 Purpose

(1) The purpose of this chapter of the policy is to -

(a) ensure that engineering plans and other documents are uniformly prepared in accordance with this policy and Australian Standards where appropriate and include an adequate level of detail to enable the local government and other future users to -
(i) access infrastructure assets;
(ii) consistently locate and readily compare information;
(iii) rely on the accuracy of the information;

(b) clearly state engineering and general conditions that are applicable to the construction of infrastructure that will become a public asset and the responsibility of the local government to maintain.

9.2.2 Applicabilit y

(1) This chapter of the policy applies to all development applications which require the submission of plans and/or documentation for examination under the planning scheme;

(2) This policy is relevant to applications for material change of use, reconfiguring a lot, building work or operational work, when applicable.

9.2.3 Application Requirements

(1) Where new development has roads, frontage treatment or services that affect or abut a declared main road, a letter of approval from the Department of Main Roads is included before the documents are inspected.

(2) Civil engineering works - one set of documents, including all specifications and drawings are submitted to the local government for inspection. This submission incorporates one A1 size and one A3 size legible paper copy of each drawing. All documents are certified as checked and approved by the applicant's Consultant Engineer before submission.

(3) Landscape works - five sets of documents comprising specifications and drawings are submitted to the local government for inspection. All documents are certified as checked and approved by the applicant's landscape architect before submission.

(4) After inspection by the local government, documents are amended to conform to local government requirements and one set of amended civil engineering construction documents are lodged with the local government for re-inspection. Four sets of amended drawings are required for landscape works.

(5) All existing As-Constructed information supplied by the local government, whether transmitted verbally, electronically, in written correspondence or on hard copy drawings, may contain inaccuracies and users are to take appropriate measures to verify any information obtained. The local government will not accept liability or responsibility to the user or any other person or entity with respect to any inaccuracies which may be contained in the information supplied.

9.2.4 Plan and Document Presentation

9.2.4.1 Sheet Sizes and Plan Standard

(1) Generally, all engineering drawings are on standard A1 size sheets. Drawings are produced to a standard acceptable to the local government.

(2) Landscape drawing sizes may vary from A4 to A0 in accordance with the extent of the project.

9.2.4.2 Scales

(1) Scales used for all drawings are those recommended by the Standards Association of Australia which are 1:1, 1:2.5, and 1:5 and multiples of 10 of these scales.

(2) 1:2 or multiples thereof are not desirable.

(3) The following scales are suggested but these may be varied, as appropriate to the works concerned -

(a) plan - 1:1000 or 1:500;

(b) longitudinal section -
(i) horizontal - 1:1000 or 1:500;
(ii) vertical - 1:100 or 1:50;

(c) cross sections - 1:100 (natural scale only will be accepted);

(d) intersection details - 1:250;

(e) access chamber details and the like - 1:25 or 1:10.

(4) Landscape plan scales are to match with site plans, architectural and or engineering drawing scales as applicable.

9.2.4.3 Dimensioning on Drawings

Linear dimensions on all drawings are in metres, with the exception of some detail drawings of small structures such as access chambers, which may be in millimetres.

9.2.4.4 Survey Information for Design of Works

(1) Sufficient levels are obtained to enable -

(a) long sections to be shown for the centreline of all roads, stormwater drainage lines and sewerage lines, with natural surface levels nominally shown at twenty (20) metre intervals and at significant changes of grade on the natural surface;

(b) cross sections are drawn for roads and open drains nominally at twenty (20) metre intervals and at significant changes of grade on the longitudinal section;

(c) contours of 0.5 metre maximum intervals are drawn representing the natural surface of the land.

9.2.5 Design Plans

9.2.5.1 General

(1) All engineering drawings and calculations are supervised and signed as checked and approved by a Registered Professional Civil Engineer (Queensland) before being submitted for all roadworks, stormwater drainage, sewerage, water supply, erosion and sediment control and lot improvement works.

(2) Street lighting and electricity reticulation is prepared and certified by a Registered Professional Electrical Engineer (Queensland) and co-ordinated and lodged by the Registered Professional Civil Engineer (Queensland) who will act as the Principal Consultant Engineer.

(3) All landscaping design and drawings are certified by a registered member of the Australian Institute of Landscape Architecture. Where landscaping is part of works involving civil engineering construction, the landscaping plans are co-ordinated and lodged by the Registered Professional

Civil Engineer (Queensland) acting as the Principal Consultant Engineer and the representative of the applicant.

(4) A preliminary plan and calculations for stormwater overland flow is included when the application is submitted for the site layout inspection in order to verify that the overland flow path is adequate at all locations throughout the development. In general, preliminary overland flow calculations do not need to be as precise as pipe calculations but a specific route for stormwater overland flow is clearly shown.

(5) The design includes sufficient information outside the boundaries of the premises as determined by the local government to verify that future extension of the proposed works can proceed in accordance with local government standards and without any undue cost to future development.

(6) All construction, such as pavement, footpaths, kerb and channel, drainage, sewerage and others are designed to join smoothly to existing construction to the satisfaction of the local government.

(7) Where the local government has approved staged development, the local government may require engineering design and construction to include the whole of the land, or such additional parts of the land as will enable the local government to maintain the works in a satisfactory condition if the balance of the development does not proceed to completion.

(8) Drawing content is optimised to give balanced drawings with a minimum of blank spaces and a minimum number of drawings.

(9) Civil engineering drawings, in general include the following -

(a) title block;

(b) locality plan;

(c) layout and stage plan;

(d) plan of each new road;

(e) detail plans of each intersection and cul-de-sac;

(f) longitudinal section of each road;

(g) type cross sections;

(h) cross sections of each road;

(i) signs and pavement marking plan;

(j) longitudinal section of each drainline;

(k) stream and open channel drainage plans;

(l) stormwater drainage catchment plan;

(m) stormwater drainage calculations;

(n) earthworks plan;

(o) sewerage reticulation plan;

(p) longitudinal section of each sewer line;

(q) water reticulation plan;

(r) landscape plan;

(s) erosion and sediment control plan;

(t) water quality control provisions;

(u) electrical reticulation, street lighting and conduit plan.

9.2.5.2 Title block

(1) Without limitation, the following information is included on all plans -

(a) the local government's file reference number;

(b) development name, if any;

(c) real property description;

(d) locality;

(e) developer's name;

(f) scales;

(g) drawing number and sheet number;

(h) schedule and date of amendments;

(i) signed design certification;

(j) signed check certification;

(k) signed approval certification, by the relevant qualified person.

9.2.5.3 Locality plan

The location of the development in relation to adjacent centres, main roads, major streets or waterways is shown.

9.2.5.4 Layout and stage plan

(1) For large developments, the layout plan shows the relationship of all new roads to each other, and to existing roads adjoining the development.

(2) Where development is planned in stages, the boundaries of proposed stages are shown on the plan, and the stages identified by numbering.

(3) Existing and proposed streets which are adjacent to or fronting the proposal are included on the layout plans.

(4) All services, natural features, significant trees and the like are shown on existing road reserves.

(5) Details of the permanent survey mark, including the AHD level from which the levels were transferred, are included.

9.2.5.5 Plan of each new road

(1) The plan of each road includes -

(a) road reserve boundaries;

(b) lot boundaries, both existing and proposed;

(c) centreline or other construction line;

(d) chainages on centreline or construction line;

(e) bearings of the centreline or construction line;

(f) offsets if the construction line is not the centreline;

(g) tangent point chainages of each curve;

(h) radius and tangent length of each curve;

(i) road reserve boundaries, centreline, and bearing of each intersecting road;

(j) chainage of the intersection point of road centrelines;

(k) channel lip lines, kerb types, lip radii and chainage of all tangent points of lip lines;

(l) edge of pavement, where no kerb and channel is proposed;

(m) dimensioned road reserve, verge, footpath and pavement widths, where these differ from the standard cross section;

(n) location and details of signs and road markings proposed;

(o) drain line locations and diameters of pipes;

(p) access chamber locations;

(q) gully location tabulated to include type, chainage, centre of grate lip level, pipe diameter and invert levels;

(r) location of existing utilities or other existing works within the site;

(s) limits and levels of lot filling or grading;

(t) co-ordinates of all set out points;

(u) location and levels of bench marks and reference pegs on AHD;

(v) north point.

9.2.5.6 Detail plans of intersections, culs-de-sac or the like

(1) Intersection detail plans include all relevant information required for plans together with additional details such as channel lip levels on all kerb and channel returns, pavement contours and channelisation works.

(2) Lip level longitudinal grading plots for kerb returns and culs-de-sac are shown on the drawing or alternatively, photocopies of plots may be submitted for examination.

9.2.5.7 Longitudinal sections of roads

(1) The longitudinal section of each road includes -

(a) chainages;

(b) peg levels;

(c) design road centreline levels;

(d) a plot of the existing surface on the construction centreline;

(e) design grades;

(f) chainage and level of tangent points of vertical curves;

(g) sight distance diagram for each direction of travel for collector or higher order roads only;

(h) line marking where applicable.

9.2.5.8 Type cross sections of roads

(1) A standard cross section is shown for each road, including -

(a) road reserve width;

(b) pavement widths, lip to lip dimension;

(c) road verge widths;

(d) concrete footpath and cycle paths;

(e) crossfalls of pavement and road verges;

(f) pavement depth;

(g) type of kerb and channel;

(h) type of pavement surfacing.

9.2.5.9 Cross sections of roads

(1) A cross section is shown for each chainage on each road;

(2) Cross sections show -

(a) road reserve boundaries;

(b) pavement centreline, or other construction lines;

(c) natural surface;

(d) design cross section;

(e) crossfall of pavement and road verge, pavement and road verge widths, and pavement depths, wherever these differ from the standard cross section.

(3) When existing bitumen sealed roads are widened, cross sections include the full existing sealed pavement cross section at not more than 10 metre intervals.

(4) Each cross section shows the percentage crossfall on the existing bitumen surface and the design crossfall to the lip of the proposed kerb and channel.

(5) Notations on drawings also require the Supervising Engineer to check for any errors between the design and the set out of the kerb and channel before the kerb and channel is constructed.

9.2.5.10 Signs and road pavement marking plans

These plans show all necessary traffic lights, warning signs, regulatory signs, direction signs and pavement marking details, adequately dimensioned for accurate setting out. The sign and line marking information is on a separate set of plans to other plans referred to above.

9.2.5.11 Longitudinal sections of stormwater drainlines

(1) A longitudinal section of each drain line is shown, including -

(a) chainages;

(b) existing surface levels;

(c) design invert levels;

(d) access chamber chainages, inlet and outlet invert levels, and finished surface levels of structures;

(e) distances between access chambers;

(f) grade of each pipe in percent;

(g) diameter of each pipe length;

(h) class of each pipe, length and type of pipe;

(i) design discharge;

(j) design velocity;

(k) designed hydraulic grade line.

(2) All piped drainlines and constructed or natural channels used to convey run-off as part of the development are shown on drawings.

(3) Longitudinal sections and cross sections of all channels show the calculated hydraulic grade line for the design frequency.

(4) Piped drainlines are included either on the road longitudinal sections where applicable or detailed separately.

9.2.5.12 Stormwater drainage catchment plan

(1) The catchment plan shows all catchments, including external areas contributing to the stormwater drainage design, and the following -

(a) road reserve boundaries;

(b) lot boundaries;

(c) peg lines and chainages;

(d) finished surface contours at not more than 2 metres vertical interval or 30 metres horizontal interval with spot levels where 0.5 metre contours are more than 30 metres apart, all on AHD;

(e) identification of drainlines;

(f) access chambers, catchpits, location and type of stormwater improvement devices or associated infrastructure;

(g) drainage easements where required over underground drainlines and outlets.

(2) Waterway longitudinal sections and cross sections are included in the drainage plans at intervals not exceeding 100 metres in order to determine flood levels.

9.2.5.13 Waterway and open channel plans

(1) Engineering drawings for waterways and open channels, whether natural or constructed, include the following information -

(a) longitudinal and cross sections with invert levels, 50 percent AEP and 1 percent AEP flood levels, and where applicable, existing and proposed surface profiles;

(b) plans showing existing and proposed surface contours, where applicable, and 1 percent and 50 percent AEP flood lines. Additionally, show 10 percent AEP flood lines in parkland;

(c) details of all proposed construction, landscaping and maintenance.

9.2.5.14 Sewerage layout plan

(1) The sewerage layout plan includes -

(a) the boundary of the development;

(b) a north point;

(c) details of the permanent survey mark, including the AHD level from which the levels were transferred;

(d) finished surface contours with sufficient levels to verify house branch design;

(e) lot layout and numbers;

(f) location of all sewer lines and other services where they cross;

(g) pumping stations, maintenance structure numbers and sewer diameters;

(h) a site plan at a scale of 1:50 for sewerage pump stations;

(i) details of water and electricity supply, landscaping, access and control buildings, if applicable;

(j) date of preparation of drawings.

(2) Where the proposed development consists of two or more stages, a preliminary master layout plan showing boundaries of all stages, which are identified by numbering, is provided by the Consultant Engineer. The plan also shows the proposed locations and sizes of all trunk mains, pumping stations and sewage treatment plants, where relevant. Contours are shown at 0.5 metre nominal intervals or as otherwise approved by the local government.

(3) Lot layout need not be provided in the master plan. However, the proposed number of lots in each stage is provided. Details of the location and area of all zonings proposed are provided.

(4) Should a temporary or permanent sewage treatment plant be required, an Environmental Impact Statement (EIS) is prepared and submitted to the local government and to the relevant State Government department/s for review. All approvals are obtained by the developer at the developer's expense.

(5) Where sewage treatment plants are proposed, the local government will examine these but the developer is to connect to the local government's sewer. Such plants may be permitted either on an interim or a permanent basis. Any such permission will be subject to an EIS for the approval of Redland Water and Waste and the relevant State Government departments. Redland Water and Waste will advise the local government's requirements for such plants on a case by case basis.

9.2.5.15 Sewerage longitudinal sections

(1) The longitudinal section of each sewer line includes -

(a) upstream and downstream invert levels;

(b) surface levels;

(c) depth;

(d) grade expressed as 1 in …;

(e) diameter;

(f) type and class of pipe;

(g) chainage;

(h) distance between maintenance structures;

(i) concrete stops, where required;

(j) maintenance hole and shaft number;

(k) maintenance hole type and drop type;

(l) location and depth of all underground services;

(m) the design invert level of each house connection branch indicated with an X, the lot number and the type and invert level of the branch.

9.2.5.16 Water reticulation layout plan

(1) The developer is to provide a basic water reticulation layout plan showing -

(a) pipeline sizes;

(b) fire hydrant locations;

(c) valve locations;

(d) bends locations;

(e) junction locations;

(f) ready tap or similar locations;

(g) service connection location;

(h) cross-road conduit locations;

(i) changes to existing works;

(j) specific notes and instructions;

(k) a locality drawing;

(l) the boundary of the development;

(m) a north point;

(n) finished surface contours at maximum 0.5 metre intervals covering the entire area of the development;

(o) lot layout and numbers;

(p) proposed location for any pump stations, showing access details;

(q) the date the drawing was prepared.

(2) The design plan includes, in addition to the above details -

(a) references to the local government's approved standard drawings;

(b) depths to invert of pipes;

(c) material type and class of pipes and joints;

(d) distances between fittings;

(e) type, size and class of all fittings;

(f) size and location of all concrete anchor blocks, thrust blocks, and diaphragm walls;

(g) dimension from road alignment boundary;

(h) minimum clearances to other services;

(i) pipeline and fitting, internal and external protection details including at road pavement crossings;

(j) trench cross section detail showing the pipes as well as bedding and filling materials for each size and type of pipe with a reference to Australian Standards and/or the manufacturer's instructions regarding installation;

(k) pump curves if appropriate, including head/discharge curve, NPSHR curve and efficiency curves;

(l) complete pipe work and structural details of any pump stations, including complete details of valves and other fittings;

(m) proposed technical specifications for pumps and pump stations including provision of flow meters, pressure transducers and their connection to a telemetry system.

(3) Where the proposed development consists of two or more stages, a master layout plan showing the boundaries of all stages, which are identified by numbering, is provided by the Consultant Engineer. The plan also shows locations of any existing or proposed trunk mains, treatment plants or reservoirs.

(4) Lot layout need not be provided. However, the proposed number of lots in each stage is provided. Details of the location and area of all zonings proposed are provided. Contours are shown at maximum 0.5 metre intervals or as approved by the local government.

(5) Where water treatment plants are proposed, the local government may reject these and the developer may be required to connect to the local government's mains; or they may be permitted either as an interim plant or a permanent plant. Any such permission is subject to an EIS to the approval of Redland Water and Waste and the relevant State Government department/s. Redland Water and Waste will advise of the local government's requirements for such plants on a case by case basis.

9.2.5.17 Erosion and sediment control plan

(1) An erosion and sediment control plan shows the following information -

(a) an accurate property description;

(b) a north point;

(c) drawn to a scale which is suitable to the site, normally 1:1000;

(d) accurate contours at an interval suitable to the site, normally 0.5 metres;

(e) property boundaries;

(f) construction site or disturbed area boundary, outside of which no works, vehicle movements or stockpiling of materials occurs;

(g) details of soil types within the distributed area including acid sulfate soils;

(h) details of access points to the construction site, and methods adopted for the removal of mud and dirt from vehicle tyres;

(i) location, details, dimensions and maintenance schedules of all permanent and temporary sediment control structures;

(j) design calculations detailing the sizing of all stormwater quality control devices;

(k) location of existing vegetation which is retained and methods proposed to protect vegetation from machinery;

(l) location of vegetation which is to be removed, and method of disposal;

(m) all existing waterways and/or drainage structures on the subject and adjacent premises;

(n) a plan at an appropriate scale, showing the relationship of the premises with the catchment in which it lies, as well as the relationship of the premises to any waterways, wetlands or natural drainage lines;

(o) temporary and permanent stormwater management;

(p) material stockpile areas;

(q) staging of the erosion and sediment control works in note form that schedules the implementation stages of the various techniques;

(r) finished levels at AHD, where appropriate;

(s) re-vegetation techniques.

9.2.5.18 Landscaping plans

Refer to Phase 4 - Construction Design Plans and Documentation in Chapter 11 - Landscaping, of this policy.

9.2.5.19 Waste Management Plan

Refer to section 9.16.9 in Chapter 16 - Waste Management, of this policy.

9.2.6 Information Required For On-Maintenance

9.2.6.1 General

(1) All required documentation and As-Constructed drawings are submitted to the local government prior to any construction being accepted On-Maintenance - refer to sections 9.2.6.2 and 9.2.6.3 of this chapter of the policy.

(2) The following relevant bonds are submitted to the local government -

(a) Performance Bonds;

(b) Significant Vegetation Bonds;

(c) Uncompleted Works Bonds, where relevant;

(d) As-Constructed Information Bonds;

(e) Maintenance Bonds.

Note -

Refer Planning Scheme Policy 3 - Contributions and Security Bonding, Chapter 6.

(3) As a result of the local government review of the As-Constructed information and an On-Maintenance inspection of the completed works, the As-Constructed information and/or documentation may require amendment. Should this be necessary and should it be appropriate to

place the development On-Maintenance, then the As-Constructed Information Bond is applicable before the On-Maintenance approval is issued.

(4) Prior to the local government formally accepting the development works On-Maintenance where amended As-Constructed information is required, the applicant is to lodge a bond of an amount per lot or; an amount for each additional dwelling unit; or a percentage value of the construction cost of a building for the security of the preparation of As-Constructed information. Refer to Planning Scheme Policy 3 - Contributions and Security Bonding for information regarding bonding amounts.

(5) Amendments to As-Constructed drawings or documentation required by the local government are completed and the information resubmitted to the satisfaction of the local government.

(6) Once the As-Constructed information has been resubmitted, 60 percent of the As-Constructed Information Bond is returned. The remaining 40 percent of the bond is returned after the final As-Constructed information is approved by the local government.

(7) The resubmission of the As-Constructed information is required within one month of development going On-Maintenance. Non compliance with resubmission of amended As-Construction within this period may result in -
   (a) the On-Maintenance period being extended for the time that the As-Constructed data is outstanding;
   (b) the As-Constructed information bond being forfeited to cover all costs incurred by the local government in the capture and presentation of information.

9.2.6.2 Period of maintenance for municipal works

(1) The period of maintenance for municipal works, except for sewage pumping stations and landscape works, is a minimum of twelve months from the date at which On-Maintenance has been deemed to take effect.

(2) For sewage pumping stations, the period of maintenance is 12 months commencing after a minimum of 15 equivalent tenements have been completed.

(3) For landscaping works, the period of maintenance is varied from a minimum of six months to a maximum of eighteen months depending on the scale of development and in order to ensure establishment and survival of planted species through varying seasonal conditions.

9.2.6.3 Documentation

(1) Development works are not accepted on-maintenance until the following documentation is submitted to the local government -

   (a) Design Drawings Certified As-Constructed. Refer to section 9.2.6.5 of this policy;

   (b) Certified Digital As-Constructed drawings. Refer to section 9.2.6.6 of this policy;

   (c) Inspection and testing certification;

   (d) Stormwater and Sewer main closed circuit television reports;

   (e) Certification of foundation conditions, where applicable;

   (f) Occupation stage waste management plan where applicable;

   (g) Copies of test results on -
      (i) Compaction of fill;
      (ii) Sub-grade CBR;
      (iii) CBR 15 material quality (if used);
      (iv) CBR 15 compaction (if used);
      (v) Subsoil drain filter media grading;
      (vi) Sub-base course material quality;
      (vii) Sub-base course compaction;

(viii) Base course material quality including sulphate content;
(ix) Base course compaction;
(x) Bituminous chip seal application rates;
(xi) Prime or primer seal spray and application rates;
(xii) AC core tests;
(xiii) Sewer pressure tests;
(xiv) Sewer main closed circuit television report;
(xv) Grading to sewer surround material;
(xvi) Grading to water main surround material;
(xvii) Water main pressure tests;
(xviii) Water main water quality tests;
(xix) Stormwater main closed circuit television report;
(xx) Any concrete testing required by the local government;
(xxi) Any other job specific testing carried out or ordered by the local government.

(2) The documentation is presented in a logically assembled and bound document including a table of contents confirming completeness.

(3) Should any of the above test results fail to meet the local government's requirements, the Consultant Engineer is to include details of re-testing/rectification carried out.

9.2.6.4 Certification of Drawings

(1) All As-Constructed engineering drawings are certified As-Constructed Works by a Registered Professional Engineer Queensland (RPEQ) in the form of a note on each drawing, which confirms that it is a true and correct record of the works constructed. The required certificate is -

As-Constructed Works

It is certified that works herein have been constructed to Local Government standards, relevant approved specifications and the operational works approval. The As-Constructed Drawings for these works constitutes a true and correct record of the works constructed and complies with the design intent.

Signature …… RPEQ No. ……
Date of Practical Completion……..
Company Title . . . . . .

(2) All As-Constructed landscape drawings are certified As-Constructed Works by a Landscape Architect holding A.I.L.A.- Australian Institute of Landscape Architecture associate membership, in the form of a note on each relevant drawing, which confirms that it is a true and correct record of the landscape works constructed. The required certificate is -

As-Constructed Landscape Works

It is certified that works herein have been constructed to Local Government standards, relevant approved specifications and the operational works approval. The As-Constructed Drawings for these works constitutes a true and correct record of the landscape works constructed.

Signature …… A.I.L.A. No……..
Company Title . . . . . .

(3) All As-Constructed drawings are certified As-Constructed Works by a Registered Surveyor or Licensed Surveyor (Queensland), in the form of a note on each drawing. This will indicate that the location, the levels and the dimensions shown thereon are a correct record of an As-Constructed survey performed in accordance with the prescribed accuracy standards. The required certificate is -

As-Constructed Works

It is certified that the locations, levels and dimensions of the infrastructure shown herein are a true representation of the constructed works and that the As-Constructed survey was performed to the prescribed accuracy standards.

Registered/Licensed Surveyors signature……
Company Title . . . . . .

Notes -

- A registered surveyor is a person or a body corporate registered as a surveyor by the Surveyors board of Queensland under the Surveyors Act 1977.
- A Licensed Surveyor is a registered surveyor that the Queensland Surveyors Board has endorsed to perform cadastral surveys under the Surveyors Act 1977.

(4) The accuracy of surveyed As-Constructed features is ± 0.10 metres horizontally and ± 0.02 metres vertically. Finished surface contours accurately represent the surface such that 90 percent of levels obtained by survey would fall within 0.1 of a metre of the level indicated by the contours. Spot levels over fill areas are accurate to ± 0.05 metres unless specified otherwise by the local government.

(5) The Licensed/Registered Surveyor's certification provided to the local government confirms that -

(a) road construction provides minimum verge widths and pavement widths in accordance with the approved engineering drawings;

(b) stormwater drainage pipes and access chambers are within easements and/or drainage reserves provided in accordance with the development approval;

(c) roof water and inter-lot drainage construction and sewerage construction are in correct relationship to property boundaries as required by the local government's standards.

(6) All drawings plotted from an AutoCAD drawing or DXF file and submitted to the local government are certified as being a correct representation of information contained in the relevant computer file by a Registered Professional Engineer Queensland.

(7) Where works are found not to be in tolerance, On-Maintenance will not proceed. New drawings are submitted by the Consulting Engineer for checking and approval by the local government. An additional plan checking fee may be required.

9.2.6.5 Design Drawings Certified As-Constructed

(1) Design drawings associated with the operational works approval are amended to reflect the final constructed works. This information is supplied to the local government on paper copies and as an AutoCAD drawing file.

(2) The following list includes specific drawings required in this format. Other drawings may be required as determined by the local government on an individual project basis.

(a) Cover Sheet - locality plan, notes and details;

(b) Roadway and earthwork layout plans;

(c) Road longitudinal and cross sections;

(d) Road intersection details;

(e) Stormwater longitudinal sections;

(f) Stormwater details including access chambers, stormwater improvement devices and/or other associated infrastructure;

(g) Drainage catchment plans including plot of relevant flood lines of waterways;

(h) Drainage calculation sheets;

(i) Signing and line marking plans;

(j) Erosion and sediment control plans;

(k) Earthworks;

(l) Landscaping plans - not always required as AutoCAD drawing file; refer to Chapter 11 - Landscaping of this policy.

(3) Each amended drawing shows the following -

(a) The development name and stage;

(b) The name of the Consultant Engineer submitting the information;

(c) The local government's development reference file number;

(d) Certification in accordance with the requirements in this policy. Refer to section 9.2.6.4 of this policy;

(e) Property and easement boundaries as shown on the approved calculated lot layout;

(f) Lot numbers as shown on the approved calculated lot layout;

(g) Approved road names;

(h) Level datum. Permanent Survey Mark number and reduced level adopted from which the site datum was determined;

(i) The location, number and reduced level of all permanent survey marks located within the development.

(4) The following operational works approved design drawings are required by the local government but are not to be amended with the final As-Constructed information. They are -

(a) Water reticulation drawing/s;

(b) Sewage reticulation and long section drawing/s.

9.2.6.6 Certified Digital As-Constructed Drawings

(1) Digital As-Constructed information is required to show road and lot layout as a base plan. This information is submitted in the following formats -

(a) One AutoCAD drawing or DXF file;

(b) Individual certified paper drawings depicting each of the categories below -
- (i) Sewerage reticulation - refer to sections 9.2.6.7 and 9.2.6.13 of this policy;
- (ii) Finished surface levels and extent of fill - refer to section 9.2.6.12 of this policy;
- (iii) Water reticulation - refer to sections 9.2.6.11 and 9.2.6.13 of this policy;
- (iv) Stormwater, roof water and inter-lot drainage - refer to sections 9.2.6.8, 9.2.6.9 and 9.2.6.13 of this policy.

Notes -

- Any removed or altered local government infrastructure, including sewerage, water and stormwater, is shown within the relevant drawing.
- Separate drawings are submitted for each category unless prior approval by the local government is granted.

(2) The AutoCAD drawing or DXF file complies with the following -

(a) The information is provided in layers as specified in Table 1;

(b) Text styles and sizes are in accordance with the relevant local government approved standard drawings. Refer to S-RSC-2, W-RSC-2 and D-RSC-7;

(c) If non standard text fonts are used, the relevant font file is supplied to the local government with the drawing file;

(d) The scale of the AutoCAD drawing is such, that when plotted at 1:1, the resulting plan is at a scale of 1:1000;

(e) Presentation of plotted information is in accordance with the relevant local government approved standard drawings W-RSC-2, S-RSC-2 and D-RSC-7 when plotted at a scale of 1:500;

(f) As-Constructed details are drawn accurately to reflect the As-Constructed survey and to ensure that the features are correctly shown in relation to property boundaries. Centres of access chambers, inspection openings and other such infrastructure are positioned such that distances from centres to boundaries agree with surveyed dimensions;

(g) The end of the line drawn to represent the sewerage dwelling unit connection is positioned to agree with dimensions shown from boundaries to the dwelling unit connection.

9.2.6.7 Sewerage

(1) The various sewerage infrastructure and their associated details for which the local government requires digital As-Constructed information are listed below. An As-Constructed survey is required to establish the infrastructure levels and locations and to determine the required dimensions.

(a) Sewer Maintenance Structures -
- (i) Maintenance structure number;
- (ii) Type of maintenance structure;
- (iii) Surface level of maintenance structure.

(b) Sewer Lines -
- (i) Length of line - from centre maintenance structure to centre maintenance structure;
- (ii) Upstream invert level;
- (iii) Downstream invert level;
- (iv) Pipe diameter;
- (v) Pipe material and class.

(c) Sewer Line Ends -
- (i) End number;
- (ii) Surface level at end;
- (iii) Dimensions from end of line to two (2) property boundaries or property corners within that lot.

(d) Dwelling unit connections -
- (i) Type of connection;
- (ii) Dimensions from the point of connection to two (2) property boundaries or property corners;
- (iii) Surface level;
- (iv) Invert level at point of connection;
- (v) Diameter of pipe;

(vi) Pipe material and class.

(e) Rising Mains -
(i) Discharge invert level;
(ii) Pipe diameter;
(iii) Pipe material and class;
(iv) Pipe protection, where applicable;
(v) Running chainages from the pump station to changes of grade, valves, air vents, scour valves, bends and maintenance holes along the main;
(vi) Surface level and crown level at changes of grade, and at a maximum of 30 metre centres;
(vii) Dimensions from horizontal bends in the main to two (2) property boundaries or corners.

(f) Pump Stations -
(i) Pump station number;
(ii) Type of pump station;
(iii) Diameter of well;
(iv) Surface level;
(v) Reduced level of well floor;
(vi) Reduced level of valve pit floor;
(vii) Invert level of inlet sewer;
(viii) Invert level of rising main;
(ix) Overflow invert level;
(x) Standby pump cut in level;
(xi) Duty pump cut in level;
(xii) Pump stop level;
(xiii) Storage capacity;
(xiv) Overflow discharge location;
(xv) Location of water service and meter;
(xvi) Real Property description;

(g) Treatment Plants -
(i) All amendments to approved plans;
(ii) Operation and maintenance manuals.

(2) As-Constructed information of works which are constructed by the local government, such as connections to existing sewers, is the responsibility of the local government to survey and record.

9.2.6.8 Stormwater Drainage

(1) The various stormwater drainage infrastructure types and associated details for which the local government requires digital As-Constructed information are listed below. An As-Constructed survey is required to establish the infrastructure levels and locations and to determine the required dimensions.

(a) Stormwater Access chambers -
(i) Access chamber number;
(ii) Type of access chamber. Refer to approved standard drawings D-0010 to D-0017;
(iii) Access chamber surface level.

(b) Catchpits -
(i) Catch pit surface level at centre of grate on lip line of channel;
(ii) Type of catch pit. Refer to approved standard drawings D-RSC-3, D-RSC-4, D-RSC-6, D-0067.

(c) Stormwater Lines -
(i) Upstream invert level;
(ii) Downstream invert level;
(iii) Pipe diameter;
(iv) Pipe material and class;
(v) Length of line - (centre access chamber to centre access chamber).

(d) Field inlets -
  (i) Surface level at centre of grate;
  (ii) Type of field inlet. Refer to approved standard drawing D-0050.

(e) Open Drains and overland flow paths -
  (i) Invert levels at 20 metre intervals.

(f) Stormwater catchment boundaries.

(2) The final electronic hydrology and hydraulic calculation files for minor and major stormwater flows are provided on hardcopy and CDROM.

9.2.6.9 Roof And Inter-Lot Drainage

(1) The various roof and inter-lot drainage infrastructure types and associated details for which the local government requires digital As-Constructed information are listed below. An As-Constructed survey is required to establish the infrastructure levels and locations and to determine the required dimensions.

(a) Roof Drainage - Level II -
  (i) Roof drainage inspection openings -
    a. surface level;
    b. invert level;
  (ii) Roof drainage lines -
    a. pipe diameter;
    b. pipe material;
  (iii) Connection points -
    a. dimensions from the point of connection to two property boundaries or property corners;
    b. surface level;
    c. invert level at point of connection.

(b) Inter-Lot Drainage - Level III (Roof and Lot drainage) -
  (i) Inter-lot drainage access chamber -
    a. surface level;
    b. invert level;
  (ii) Inter-Lot drainage lines -
    a. pipe diameter;
    b. pipe material;
  (iii) Connection points -
    a. dimensions from the point of connection to two (2) property boundaries or property corners;
    b. surface level;
    c. invert level at point of connection.

9.2.6.10 Roadworks

(1) The various roadwork's infrastructure types and associated details for which the local government requires digital As-Constructed information are listed below. An As-Constructed survey is required to establish the infrastructure levels and locations and to determine the required dimensions.

(a) Kerbs, Kerb and Channel -
  (i) Type of kerb. Refer to approved standard drawing R-RSC-6;
  (ii) Location of channel lip line;

(b) Pavement Marking and Signs -
  (i) Type of sign;
  (ii) Location of pavement markings;

(c) Construction Details -
  (i) Surface treatment;
  (ii) Pavement types and depths;
  (iii) Location of service conduits;

(iv) Location of side drains, clean out points, and mitre drains;
(v) Construction levels.

(2) Construction details and the location of signs, lip of kerb and channel and pavement markings may be determined from the approved design drawings provided no variation from the design occurred during construction.

(3) Variations from the design which are considered significant by the local government are located by survey and submitted with the As-Constructed information.

9.2.6.11 Water Reticulation

(1) The various water reticulation infrastructure types and associated details for which the local government requires digital As-Constructed information are listed below. An As-Constructed survey is required to establish the infrastructure levels and locations and to determine the required dimensions.

(a) Mains -
(i) Diameter of pipe;
(ii) Pipe material and class;
(iii) Pipe protection, where applicable;
(iv) Dimension to property boundary;

(b) Fittings -
(i) Type and class of all fittings - hydrant, valve, reducer, T junction, bend, cross junction;
(ii) Protection applied to fittings;
(iii) Distances between fittings;

(c) Pump Stations -
(i) All amendments to approved plans;
(ii) Operation and maintenance manuals;
(iii) Surface extremity of pump station chamber;

(d) Treatment plants -
(i) All amendments to approved plans;
(ii) Operation and maintenance manuals.

9.2.6.12 Finished Surface Levels

(1) The following As-Constructed information is provided -

(a) Surface contours at a maximum interval of 0.5 metres extending from the back of the kerb line of roads to the rear boundary of all lots, drainage reserves and parks;

(b) Surface levels at the intersection of lot corners and at significant changes of grade on lot boundaries. Surface levels are not required where a surface level of a sewer maintenance structure is shown within 2 metres of a corner;

(c) The extent of the fill areas and spot levels over the fill areas -
(i) the local government will determine the coverage of spot levels required over fill areas;
(ii) the surface contours are generated from levels obtained by survey;
(iii) the extent of fill areas is determined from the survey;
(iv) the extent of fill includes areas with more than 150mm of fill.

9.2.6.13 Removed Local Government Infrastructure

(1) Local government infrastructure that has been removed or modified as part of the operational works approval is shown with a note indicating the treatment. An example is a field inlet converted to a gully.

(2) Existing below ground infrastructure which is abandoned because of new works is excavated and removed from the site unless the local government gives approval in writing.

(3) Where approval is granted by the local government, the details of the abandoned infrastructure are shown in the digital As-Constructed information as being abandoned.

Table 1 - AutoCAD Drawing or DXF File - Information Layers

Layer Name	Information	Colour	Pen Size	Line Type
NAME	Canals Names Roads Names	Red	0.7 mm	Continuous
CONTOURS	Contour Lines Contour Labels	Grey	0.5 mm	Continuous
EMTLINES	Easement Boundaries	White	0.25 mm	
LOTLINES	Lot Boundaries	White	0.25 mm	Continuous
LOTNOS	Lot Numbers	Yellow	0.35 mm	Continuous
PSMSYM	PSM Symbols	Yellow	0.35 mm	Continuous
PSMTEXT	PSM Numbers PSM RL	Yellow	0.35 mm	Continuous
SEWERS	Access chambers Symbols HC Lines Line End Symbols Sewer Lines	Blue	0.25 mm	Continuous
SEWTEXT	Sewer Text	Cyan	0.5 mm	Continuous
SEWDIMS	Sewer Dimensions	Magenta	0.25 mm	Continuous
ROOFWATER	RW Pit Symbols RW HC Lines RW Lines	Green	0.5 mm	
RWTEXT	Roof water Text	White	0.25 mm	Continuous
RWDIMS	Roof water	Magenta	0.25 mm	Continuous
STWATER	STW Access chambers Symbols STW Lines Catchpits Symbols Inlet Symbols	Yellow	0.35 mm	
STWTEXT	Stormwater Text	White	0.25 mm	Continuous
WATER	Water Mains Fittings Symbols	Blue	0.25 mm	Continuous

Layer Name	Information	Colour	Pen Size	Line Type
STCATCHMENT	Stormwater Catchment Boundaries	Yellow	0.35 mm	Continuous
WTTEXT	Water Text Water Dimension	Green	0.5 mm	Continuous
FILLAREA	Extent of Fill	White	0.25 mm	Continuous
LEVEL	Spot Levels	White	0.25 mm	Continuous
PUMPSTNS	Pump Station Symbols	Cyan	0.5 mm	Continuous
PUMPTEXT	Pump Station Text	Yellow	0.35 mm	Continuous
KERBS	Kerb lines Traffic Islands Pavement Line Marking	White	0.25 mm	Continuous
SIGNS	Traffic Signs Symbols Sign Codes	Yellow	0.35 mm	Continuous
TITLEBLK	Title Block Linework	Blue	0.25 mm	Continuous
TBLKTXT	Title Block Text	Red	0.7 mm	Continuous

Table 2 - Codes for Text Information

Feature	Code	Description
Pipe Materials	CICL	Cast iron concrete lined
	DICL	Ductile iron concrete lined
	FRC	Fibre reinforced concrete
	GRP	Glass reinforced plastic pipe
	MDPE	Medium density poly ethylene
	MSCL	Mild steel concrete lined
	RCP	Reinforced concrete pipe
	RCBC	Reinforced box culvert
	RHS	Rectangular hollow section
	SLAB	Spanning slab
	uPVC	Un-plasticised polyvinyl chloride pipe
	VC	Vitrified clay
Class of Materials	2	Minimum class for RCPs
	12	Class for uPVC pressure sewer mains
	20	Class for uPVC pressure water mains
	K9	Class for ductile iron pipes
	K12	Class for flanged ductile iron pipes
	SHE	Sewer extra heavy UPVC
	SN4	Class for UPVC
	SN8	Class for UPVC
Types of Protection	PS	Polythene sleeving for ductile iron pipes
	FBE	Fusion bonded epoxy for valves and hydrants
	CONE	Concrete encased
Sewer Access Chamber Covers	CONC	Concrete in-filled
	CAST	Cast iron
	BOLT	Bolted down cover
Sewerage Pump Station Types	A	Up to 6 metres deep
	B	Over 6 metres deep
Water Main Fittings	AV	Air valve
	B	Bend
	BR	Branch, Y Junction
	H	Fire hydrant
	PRV	Pressure reducing valve
	R	Reducer
	RT	Reditap
	SV	Scour valve
	T	Tee junction
	TB	Tapping band
	V	Section valve
	X	Cross

9.2.7 Survey Control

9.2.7.1 Survey Integration

The local government has a survey control network throughout the planning scheme area upon which a plane coordinate system is established. This network facilitates the improved spatial accuracy of the digital cadastre database and the digital As-Constructed information.

9.2.7.2 Horizontal Control

(1) The local government will supply without charge, the co-ordinates to be adopted for three or more survey control points, within the survey control network, adjacent to the development site.

(2) Where coordinated permanent survey marks are not available within 500 metres of the premises, the developer is responsible for -

(a) Establishing at least two permanent survey marks not less than 200 metres apart, on the premises. Existing permanent survey marks, where available, may be adopted where ever they are secure;

(b) Co-ordination of these permanent survey marks on the local government's coordinate system to 3rd Order, Class C accuracy standards;

(c) Informing the local government and Natural Resources, Mines and Energy (NRM&E) of the method used in coordination, accuracy of coordinates and the coordinates determined for each of these permanent survey marks.

(3) All digital As-Constructed information is supplied on the local government's plane co-ordinate system.

9.2.7.3 Level Datum

(1) All levels supplied with As-Constructed information are reduced to and presented on Australian Height Datum (AHD).

(2) The local government will provide the reduced level to adopt for a permanent survey mark. The value provided is obtained from the local government's listing of NRM&E Survey Control Database and may vary from the value shown on the permanent survey mark sketch plan.

(3) For the extension of an existing development, as in staging, the reduced level provided for the initial permanent survey mark is adopted for the extension unless directed otherwise by the local government.

9.2.7.4 Permanent Survey Marks

(1) Permanent survey marks are placed on each development as directed by the local government in the development approval. Generally, permanent survey marks are placed such that their spacings are not more than 500 metres and not less than 100 metres.

(2) Where conflict arises between the development approval and the requirements of section 9.2.7.2(2)(a) above, the development approval takes precedent.

(3) All permanent survey marks are connected to the cadastral boundaries of the development site and such connections are shown on the relevant cadastral survey plan. This is to include those marks used as horizontal control for the development works.

(4) Permanent survey marks are levelled to 4th Order, Class D accuracy standards.

(5) A permanent mark sketch plan is completed and lodged with NRM&E for each permanent survey mark placed. A copy of the sketch plan is submitted to the local government before the development will be approved for Off-Maintenance.

(6) Any permanent survey marks that cannot be located or are lost due to any associated development works are reported to the local government and NRM&E for update of their Survey Control Database.

9.2.7.5 Survey Plans

Survey plans submitted for sealing and registration will show the approved road names.

9.2.8 Design Calculations

(1) All engineering design is fully documented and includes all information necessary for interpretation of design decisions. Proprietary computer software is supported by verification procedures and details of their theoretical basis. All software used is well documented and is an extensively used product.

(2) The Consultant Engineer provides computer software hardcopy and electronic data and output files in covering engineering design where appropriate.

(3) Tabulated calculations for urban drainage are required in both hardcopy and electronic form, including the same information and similar format as that shown in the Queensland Urban Drainage Manual (QUDM).

(4) Revised stormwater drainage calculations are resubmitted if the drainage has been redesigned.

9.2.9 Manuals for Mechanical And Electrical Equipment

9.2.9.1 Scope

Operation and maintenance manuals are provided covering the installation, commissioning, operation and maintenance of equipment supplied.

9.2.9.2 Standards

(1) Manuals comply with the current editions of all applicable Australian Standards, and in particular -

(a) *AS1000: 1998 - The International System of Units, SI, and its Application;*

(b) *AS1100: 1992 - Technical drawing - General principles;*

(c) *AS1101: 1993 - Graphical Symbols for General Engineering;*

(d) *AS1102: 1989 - Graphical Symbols for Electro-technology.*

9.2.9.3 Manual Detail

(1) Manuals are sufficiently comprehensive to enable local government staff to operate and maintain the equipment in an efficient and workmanlike manner.

(2) Manuals include descriptive information relating to individual items of equipment to assist personnel in becoming familiar with the equipment and its operation.

(3) Manuals include clear and concise instructions so as to allow proper and safe installation, commissioning, operation, correct maintenance, and compliance with the Manufacturer's Warranty.

(4) Such information relates specifically to the equipment as supplied. Any information which does not pertain to the equipment supplied is removed or deleted. Maintenance instructions are in sufficient detail to enable overhaul and replacement of all parts.

9.2.9.4 Submission

(1) One (1) draft copy of the manual is submitted to the local government for review and approval. The local government will return a copy of this draft with appropriate comments. These comments are incorporated into a revised draft manual, one (1) copy of which is re-submitted for a second review.

(2) This review by local government will not relieve the Developer of the responsibility to provide a useful and professionally prepared document.

(3) At such time when the local government's comments confirm that the manual is acceptable, the Contractor is to prepare the final manual.

(4) Provide two (2) copies of the final manual to the local government before the works are accepted On-Maintenance.

9.2.9.5 Addenda

(1) Should it become necessary to modify the final manual at some later stage, such as the inclusion of As-Constructed information, the developer is to issue copies of the addenda to the local government for inclusion within the existing manuals.

(2) If, in the opinion of the local government, the addendum modifies the existing manuals extensively, the developer re-issues the manuals completely.

9.2.9.6 Manual Construction

(1) The document/s is A4 size, bound in 4 ring hard cover binders.

(2) All units are SI units.

(3) All information is in English.

(4) All data sheets for proprietary equipment plant are clearly reproduced and are to indicate the appropriate information pertinent to the installation.

(5) The title and drawing number, issued by the local government, is displayed on the front cover and spine of the document to enable the manual to be included in the drawing register.

9.2.9.7 Content

(1) As a minimum, the document contains -

(a) Equipment specification, including a complete system description and a full specification for each individual item of equipment;

(b) A complete listing of the plant, equipment, valves, pipes and other items supplied and installed, including model and serial numbers;

(c) Functional description of its operation;

(d) Erection, assembly, installation, pre-commissioning and commissioning instructions and diagrams;

(e) Detailed operating instructions;

(f) Service and maintenance schedule and instructions including dismantling/assembly procedures and a table of maintenance tasks showing recommended time intervals between carrying out these tasks;

(g) Lubrication schedule, including details of lubricant types, grades and trade names, initial fill quantities, and re-lubrication quantities and intervals;

(h) Tabulation of all consumables excluding lubricants but including fuel type and quantity, electrical components, chemicals and other relevant data;

(i) Performance specification, including commissioning data.

9.2.10 General Conditions of Development

9.2.10.1 Pre-Construction

(1) The local government's examination of the documents does not mean that the documents have been checked in detail and the local government takes no responsibility for their accuracy. If, during construction, inadequacies of the design are discovered, it is the responsibility of the Principal Consulting Engineer to resubmit amended plans to the local government for examination and rectify works accordingly.

(2) If in fact, there are errors, omissions or insufficient detail on the plans for the purpose of construction, these deficiencies are made good during construction and the local government reserves the right to withhold approval to proceed with construction until such deficiencies are made good to its satisfaction. Where a discrepancy occurs between the approved engineering design and documentation and that of the local government standards, then the local government standards apply.

(3) Notwithstanding the local government's examination of construction plans, it is the responsibility of the Consulting Engineer to ensure that all connections to contiguous construction is constructed correctly as to level, alignment and grade. Subject to the requirements of the local government's Representative, it may be necessary to alter existing construction.

(4) The Consulting Engineer responsible for the engineering design is responsible for arranging a Pre-Start meeting between the local government's Representatives, the Principal Contractor's Representative and the Consultancy Firm's Representative/s. The Consulting Engineer is also responsible for arranging with the Contractor to obtain/ submit the appropriate permits, bonds and associated documentation prior to requesting a Pre-Start meeting.

(5) The Consulting Engineer is to allow a minimum of five (5) working days from the date of initial contact and that of the planned Pre-Start meeting. To ensure that the Contractor has obtained the necessary permits, the local government will require the Consulting Engineer to quote the respective Permit Numbers at the time of booking the Pre-Start meeting.

(6) At least seven (7) days notice is given to the local government for any work proposed within an existing road reserve under local government jurisdiction. This notice is in the form of a Road Opening Permit application, which includes full details of the proposed work to be undertaken within the road reserve. Details of temporary warning signs to be installed in association with these works are also submitted for local government examination prior to the work being carried out. No work commences until the local government's Water Officer (contact Redland Water and Waste) has been contacted to determine the location of water mains in the area which may affect the proposed work. Any damage to local government property including water mains, sewers, services, roads, footpaths, underground drainage or other infrastructure is made good or paid for in full by the developer before the development works are accepted On-Maintenance and/or Survey Plans signed and sealed by the local government.

9.2.10.2 Construction Controls

(1) All works are carried out in accordance with the *Workplace Health and Safety Act (1997)* and associated industry codes as identified within the Workplace Health and Safety, Industry Codes of Practice, Notice (1999).

(2) The Developer, Contractor and Consulting Engineer's representative take all necessary steps, in accordance with the *Workplace Health and Safety Act (1997)*, to ensure public safety in relation to construction activities. The local government requires a copy of the application for a Notifiable-Project to be provided for record purposes.

(3) All works are supervised by a qualified Consulting Engineer who is independent of the Contractor/s and who is to submit certified As-Constructed plans and associated documentation prior to endorsement of the Plan of Survey and/or acceptance of the development works On-Maintenance.

(4) Works which will ultimately revert to the local government or works on adjacent roads are not commenced until the local government is advised of the name of the responsible Contractor. That Contractor requires a notice of appointment from the local government as Principal Contractor, under the provisions of the *Workplace, Health and Safety Act.*

(5) Facilities such as shake down devices are provided to ensure that all trucks leaving the site/s do not carry soil on to public streets. These facilities are to the satisfaction of the local government.

(6) Construction work is carried out only between the hours of -

(a) 7am and 6 pm Monday to Friday;

(b) 7am and 5 pm Saturday;

(c) No work is undertaken on Sundays or public holidays.

(7) Noise levels from construction work comply with the requirements of the *Environmental Protection Act 1994.*

9.2.10.3 Survey

(1) A Plan of Survey, calculated only, and based on property closure surveys, is made available to the local government prior to the installation of sewer and water reticulation works, roof water / lot drainage works, telecommunication works and electrical reticulation and street lighting works. The plan is used to verify the location of the abovementioned services within the field during the construction process.

(2) Survey information supplied to the local government in connection with engineering design drawings, As-Constructed information, and cadastral boundaries are supplied in accordance with the requirements of section 9.2.7 of this policy - Survey Control.

(3) At the time of submission of a Plan of Survey for signing and sealing by the local government, the applicant also provides -

(a) A Licensed Surveyor's certificate, which indicates that the road and drainage construction is correct in relation to the property and easement alignments as required by the approved engineering design;

(b) Real property surveys and plans that conform to the approved engineering design. Where necessary, lot calculations and surveys are varied to provide approved road verge widths.

9.2.10.4 Erosion and Sediment Control

(1) All relevant sediment and erosion control measures and temporary fencing as identified on the approved engineering and/or landscaping drawings are implemented.

(2) Initially the Contractor implements those measures which are applicable, prior to the commencement of the proposed development works. The local government's Representative will assess those sediment and erosion control measures and any temporary fencing implemented. Any alterations and/or supplementary works required are incorporated during the construction process.

(3) The Contractor is responsible for -

(a) The implementation of erosion and sediment control measures and procedures during construction and maintenance stages of the development and taking all necessary actions to comply with Chapter 4 of this policy - Erosion Prevention and Sediment Control;

(b) The maintenance of all erosion and sediment control measures until such time as the works are accepted On-Maintenance;

(c) The restoration of the site and any adjoining affected lands where silt deposition has occurred as a consequence of the development. Such restoration is completed in a reasonable time as determined by the local government;

(d) Appointing a single individual who is directly responsible for ensuring the proper installation, maintenance and modification of all erosion and sediment control measures in order to ensure that sediments are retained on site and dust is minimised. This individual is responsible for not only ensuring that the works are conducted in a manner which minimises environmental harm, due to the transportation of pollutants off-site, but is also responsible for liaising with the local government's Designated Representative with regards to any erosion and sediment control issues. This individual is required to keep a diary of any discussions held with the local government's Designated Representative, together with entries of the

measures undertaken to ensure compliance with any instructions given by the local government's Designated Representative.

(4) The Civil Consulting Engineer is responsible for providing the local government with a certificate indicating -

(a) That the erosion and sediment control measures implemented on site have been installed in accordance with the prescribed standards and to the satisfaction of both the Civil Consulting Engineer responsible for the supervision of the works and the Contractor's appointed officer outlined above;

(b) That the erosion and sediment control measures implemented are fit for purpose and that where necessary, they have been modified to meet the design intent;

(c) That the Civil Consulting Engineer responsible for the supervision of the works is of the belief that the erosion and sediment control measures implemented will minimise the potential for environmental harm as defined in the *Environment Protection Act 1994*.

(5) The Civil Consulting Engineer responsible for the supervision of the works issues the above certificate on a weekly basis, preferably on a Friday.

9.2.10.5 Clearing and Earthworks

(1) Trees within existing road reserves are not damaged nor removed without the approval of the local government's Representative.

(a) Where vegetation is removed, the vegetation waste is disposed of by either -
- (i) Milling;
- (ii) Chipped and/or mulched; or
- (iii) Disposal to an approved waste disposal facility;

(b) No incineration of vegetation or waste is permitted;

(c) Waste other than vegetation waste, existing on site and/or generated as a result of the Operational Works is disposed of to an approved disposal facility via an approved waste receptacle and/or collection service;

(d) If the development works require the importation of fill material and/or the export of excess spoil off site, the Civil Consulting Engineer submits the following documentation for acceptance or approval as applicable -
- (i) Written confirmation that the site from which the fill material is imported has either a License for the extraction of quarried materials and/or an Operation Works Permit granted by the local government for said operation, and that the material is free from contamination. In the event that the site from which the material has been obtained has not been verified as contamination free, then appropriate validation is undertaken and a copy of the report submitted to the local government;
- (ii) Written Certification from a Geo-technical Consultant that the material being imported and/or excavated meets with the intent specified within the respective job specification/s;
- (iii) A Plan which details the proposed haul route, together with supporting documentation indicating the period over which the operations are to occur and times of day that the specified vehicles would be on the proposed haul route;

(e) The local government reserves the right to require the applicant to provide an application for a development permit - Operational Works, which includes suitable report/s from a qualified Consultant/s over those lands from which it is intended to source and/or dispose of materials associated with the earthworks operations. The report/s will need to address the environmental impact of the material placement and/or removal;

(f) All lot filling is in accordance with *AS. 3798: 1996 - Guidelines on Earthworks for Commercial and Residential Developments*. The local government's Representative will specify the level of compaction and agree upon the positions and levels at which that testing is undertaken. The Civil Consulting Engineer is to submit satisfactory Test Certificates confirming that the necessary level/s of compaction has been achieved;

(g) If any of the lots are filled in excess of 300mm and/or if any part of a lot was suspected of having any contaminants and/or uncontrolled filling, a report is submitted from a qualified Geo-technical Consultant that all unsuitable material has been removed from the site and that all areas that have been disturbed have been compacted to local government requirements and to *AS 3798: 1996 - Guidelines on earthworks for commercial and residential developments*. All filling in excess of 300mm in future lots is to a level 1 responsibility as per *AS 3798: 1996 - Guidelines on earthworks for commercial and residential development* and will have a site classification as per *AS 2870: 1996 - Residential slabs and footings-Construction*. Problem sites, which have not been re-classified to a lower classification, cannot be deemed acceptable;

(h) All dams which are not retained are dewatered, all silt removed and the dam wall levelled to the surrounding ground level. Prior to the emptying of the dam, the local government's fauna officer is contacted and advised of the day the dam is to be emptied. Where appropriate, subsoil drainage is provided to ensure that the base of the dam site does not retain or accumulate ground water. Written Certification together with satisfactory test results are submitted to the local government verifying that the earthworks have been completed to a Level 1 responsibility as per *AS 3798: 1996 - Guidelines on earthworks for commercial and residential developments*. The local government reserves the right for its representative to require additional testing over and above that required by the Job Specification should the need arise;

(i) The Civil Consulting Engineer responsible for the preparation and submission of the As-Constructed drawings and associated documentation is to ensure that the location of any dams, bores and/or wells which existed on the site prior to development are clearly identified on the As-Constructed drawings together with a brief description of what relevant actions have been taken in respect of the identified structure;

(j) The applicant is responsible for protecting nearby property owners from dust pollution arising from the construction and maintenance of works. The applicant is to comply with any lawful instruction from the local government Representative if, in their opinion, a dust nuisance exists. Should the applicant cause an actionable nuisance where dust is being generated as a result of the development works, the applicant is initially responsible for suppressing the generation of dust and secondly, for resolving any written claims resulting from the generation of dust from the site. This condition in no way restricts the applicant's responsibilities in regards to the *Environmental Protection Act 1994* and the associated Environmental Protection Policies (EPPs).

9.2.10.6 Connections to Local Government Services

(1) All connections to the local government's water reticulation and sewerage systems are made by local government staff at the developer's expense. Requests for connections and estimates are in writing with details of work required specified clearly.

(2) The local government reserves the right to refuse to accept works On-Maintenance until such works has been paid for and completed.

9.2.10.7 Roadworks

(1) Prior to commencement of Construction Works within existing road reserves, the Contractor is to obtain a Road Opening Permit.

(a) The Contractor is to prepare a plan of the works illustrating the warning signs, barricades and any lighting required to maintain safety in accordance with Queensland Transport requirements; the Manual of Uniform Traffic Control Devices; Roadworks Signing Guide; and/or any other Code/ Standard as may be deemed appropriate by the local government. The Contractor is to submit the plan/s with an application for a Road Opening Permit and a program for the completion of the work. The plan/s is certified and approved by the Principal Consultant Engineer prior to its submission to the local government;

(b) Costs incurred by the local government in maintaining safety, due to the contractor's non-compliance with the requirements of the permit are borne by the applicant. All/ any monies due, are paid in full to the local government prior to the sealing of the survey plans;

(c) Road base reported as having actual Soluble Sulphate in excess of 500 mg/kg SO4 and/or total Sulphate after oxidizing by Peroxide of 5000 mg/kg SO4 is regarded as having substantial potential for causing damage to asphalt by Sulphate induced blistering;

(d) Prior to the use of road base material, the developer is to submit current certified evidence, obtained within the last twelve months, from a qualified Geo-technical Consultant indicating that the proposed unbound material does not contain Sulphate amounts in excess of quantities that may induce Sulphate blistering in the bitumen seal;

(e) Where the development incorporates road widening works, the following procedures are undertaken -
   (i) The edge of the existing pavement is cut back such that the full depth of the existing gravel pavement is exposed;
   (ii) The existing pavement is then stepped, such that each pavement course is set back a minimum of 150mm from that of the course below;
   (iii) The existing pavement surfacing, in the case of AC, is cut back a further 150mm minimum, prior to surfacing. Should the existing pavement have a bitumen seal, the local government may permit the widening to be sealed with a two-coat Bitumen Seal in lieu of providing AC surfacing. Where it is proposed to use a bitumen seal in lieu of AC surfacing, it is the responsibility of the Consulting Engineer to seek approval for said works as part of the pavement box design approval.

9.2.10.8 Water, Sewerage, Roof Water and Inter-Lot Drainage

(1) Water connections and water meters are provided to each lot in accordance with approved standard drawings numbered W-RSC-2 to W-RSC-5.

(a) The ready-tap system for water connections is installed where appropriate;

(b) The local government will supply the water meters to the developer at approved rates. The details of the water meters and their locations are made available in the prescribed form prior to the local government being required to accept the development On-Maintenance;

(c) Where connections are proposed from existing live mains, the applicant is to request Redland Water and Waste to make such connections at the applicant's expense;

(d) All water supply, sewerage, stormwater, roof and inter-lot drainage lines and maintenance structures are inspected at the following stages -
   (i) Pipelines bedded and backfilled with sewer lines and house connections exposed;
   (ii) Maintenance hole bases poured and benched with a maximum of 1.5 metres of wall constructed;

(e) If the local government does not have the opportunity to inspect the development works at the above stage/s of construction, the Civil Consulting Engineer is to indicate on the Certificate of Supervision that the necessary inspections have been completed and that the works and As-Constructed information conforms to the approved engineering drawings and local government standards.

9.2.10.9 Administration

(1) The local government's Representative/s is present for the following designated inspections -

Inspection/Meeting	Minimum Notice Required by Local Government
Pre-Start Meeting	Five (5) working days
Sub grade Inspection	24 hrs
Pre-seal	24 hrs
Sewer Pressure/vacuum test (witness)	24 hrs
Water pressure test (witness)	24 hrs
Other inspections as may be deemed applicable on a site by site basis	24 hrs
On Maintenance Inspection	Five (5) working days
Off Maintenance Inspection	Five (5) working days

(2) The Civil Consulting Engineer and the Civil Contractor is responsible for providing all necessary equipment and personnel as may be required to complete the nominated inspection(s).

(3) The Civil Consulting Engineer is to inspect the development works, as applicable, and satisfy himself/ herself that the works are satisfactory prior to booking the respective inspections. In those instances where the local government's Representative/s fails a designated inspection, the local government will require the payment of a re-inspection fee prior to revisiting the site.

Note -

- Re-inspection fees are subject to annual review by the local government to reflect increasing costs to local government in providing inspection services. The cost associated with local government conducting re-inspections is available upon request from the local government's Land Development Unit, phone 3829 8784.

(4) Prior to requesting an On-Maintenance inspection, the following requirements are met -

(a) All As-Constructed drawings and associated documentation, certifications and the local government's On-Maintenance Inspection list are submitted to the local government five (5) working days prior to requesting an On-Maintenance inspection. This is taken to include the submission of hardcopy and digital information, as specified in section 9.2.6 of this chapter of the policy - Information Required for On-Maintenance. This information includes all drainage and/or flood calculation output files separate to the other digital information. Refer to Figure 1 in this chapter of the policy for the On-Maintenance Inspection list.

(5) The local government will conduct an On-Maintenance inspection of the works once it is confirmed that the necessary drawings and documentation have been submitted to the local government for acceptance. The Civil Consulting Engineer responsible for supervising the works is responsible for arranging the On-Maintenance inspection between the local government's Representatives, the Principal Contractor's Representative and the Consultancy Firm's Representative/s.

(6) The development works will not be accepted On-Maintenance until such time as -

(a) A successful On-Maintenance inspection of the development works, including all civil, landscaping and electrical reticulation works has been completed in the presence of the local government's Representative/s;

(b) The local government has received and accepted as correct the As-Constructed drawings, digital data and documentation for the development. This includes the submission of digital documentation which conforms to local government standards. Refer to section 9.2.6 of this policy - Information Required for On-Maintenance;

(c) The local government has received a certified Certificate of Supervision for the approved development works. The certificate indicates that the As-Constructed development works have been supervised throughout construction to completion in accordance with the approved engineering design and specification/s. The various parties responsible for the

supervision of the development works are to sign the certificate. Refer to Figure 2 - Certificate of Supervision, in this chapter of the policy;

(d) The local government has received a Bill of Quantities certified by the Civil Consultant for the approved development works;

(e) The local government is in receipt of the approved maintenance security deposit for the development works;

(f) The local government is in receipt of all payments nominated in association with private works, sewer and water applications.

(7) The date at which the development works are accepted On-Maintenance is deemed to be the latter of the dates associated with each of the above events.

(8) The development works will not be accepted Off-Maintenance until such time as -

(a) A successful Off-Maintenance inspection of the development works, including all civil, landscaping, electrical reticulation and other works has been completed in the presence of the local government's Representative/s;

(b) Survey plans have been registered with the Titles Office. This includes any necessary easement documentation associated with the proposed development works;

(c) Copies of any Permanent Mark Sketch Plans are received by the local government. Refer to Item 9.2.7.4.

(9) As-Constructed drawings, digital documentation and other documentation, prepared in accordance with the local government's requirements are required for local government records. Refer to section 9.2.6.5 of this policy - Design Drawings Certified As-Constructed and 9.2.6.6 - Certified Digital As-Constructed Drawings.

(10) Notwithstanding the approval, all works are carried out in accordance with the local government standards and the local government reserves the right to order amendments should any part of the works be found nonconforming.

(11) This approval will lapse if the conditions of all approvals subject to the application are not fully complied with within the time limits stipulated in the *Integrated Planning Act 1997* (IPA).

9.2.11 FurtherAdvice

(1) The Civil Engineer responsible for the supervision of the proposed development works is responsible for the submission of a Roadworks Management Plan for local government approval seven (7) days prior to the commencement of works on site -

(a) With regards to the implementation of sediment and erosion control throughout the site and along the road reserve/s adjacent to the development, these works are undertaken in accordance with the approved engineering drawings and specifications. Refer to the local government's Erosion Prevention and Sediment Control Code and Chapter 4 of this policy - Erosion Prevention and Sediment Control for the approved construction specification. Should the measures fail to meet with best engineering practice and/or the local government's Planning Policy, the measures are amended as required to meet the required performance standards. The Contractor may choose to liaise with both the Civil Consulting Engineer and the local government's Designated Representative as to the most appropriate practice/s to adopt in order to achieve the required performance standards. However, the responsibility for implementation of erosion and sediment control devices remains with the Contractor;

(b) Should the Contractor fail to implement sediment and erosion control measures and/or maintain said measures, the local government reserves the right to -
(i) firstly, withdraw all road opening permits granted to the Contractor;
(ii) secondly, prosecute one or all of the following individuals/ parties -
a. the owners of the land subject to this application;

b. the applicant;
c. the Contractor and/or any other associated parties;

(c) The applicant is reminded that the provision and the subsequent maintenance of appropriate erosion and sediment control measures are a condition of the development permit. Thus, failure on the applicants' behalf and/or a party acting on behalf of the applicant to comply with the respective conditions, constitutes a contravention of the conditions of this development permit. In accordance with Section 4.3.3.(1) of the *Integrated Planning Act 1997*, the maximum penalty for a person found guilty of contravening a condition of a development permit is 1,665 penalty units;

(d) If the development works involve the removal of surplus excavated materials and/or the importation of fill onto the site, the applicant is to arrange for the submission of a Traffic Management Plan for local government approval fourteen (14) days prior to the commencement of works;

(e) The applicant is referred to the local government's policy document titled Security Bonding. This document has been adopted by the local government and thus sets the standards for the establishment of bond figures, the details shown on the bond/s and the form in which the bond/s are submitted;

(f) No building approvals will be issued by the local government on lots on the endorsed Survey Plan prior to -
(i) registration of such plans by the Registrar of Titles;
(ii) acceptance of the Development Works On-Maintenance;

(g) Locations within the local government area have been identified as having an infestation of the Red Imported Fire Ant (RIFA). The movement of extracted or waste soil, retaining soil, turf, pot plants, plant material, baled hay/straw or mulch/green waste/fuel into, within and out of the City from a property inside a restricted area is to be with the advice of the Department of Primary Industries RIFA Movement Controls;

Note -

- Further information can be obtained from the DPI Call Centre on 13 25 23 or on their web site at www.dpi.qld.gov.au/fireants.

(h) It is the owner's and occupant's responsibility, under the *Environmental Protection Act 1994*, to advise the Chief Executive of the Environmental Protection Agency of any Notifiable Activity conducted on the site or contamination or suspected contamination which may cause a hazard to human health or the environment. This is done within 30 days of becoming aware of the operation of a Notifiable Activity on the site or of any contamination or suspected contamination. The Chief Executive, pursuant to the Act, is empowered to require that the development complies with the provisions of the Act, including the preparation of site investigation reports and if necessary the remediation of the site at the owners' expense.

Figure 1 - On -Maintenance Inspection List

Location…….....
Prior to an On-Maintenance inspection, please complete the following -

	N/A	Attached
As-Constructed certified drawings		
Roads and associated drainage	☐	☐
Drainage	☐	☐
Drainage calculations	☐	☐
Water	☐	☐
Sewer	☐	☐
Landscaping	☐	☐
Silt/Erosion control	☐	☐
Inspection and Testing certificates		
Compaction of fill	☐	☐
Level 1 and/or site classification	☐	☐
Sub grade compaction	☐	☐
CBR 15 material quality	☐	☐
CBR 15 compaction-100 percent standard	☐	☐
Subgrade course material quality	☐	☐
Subgrade course compaction-100 percent standard	☐	☐
Base course material quality	☐	☐
Base course compaction-98 percent modified	☐	☐
Bituminous (chip) seal application rates	☐	☐
AC core compactions-92 percent	☐	☐
AC core depth- 25mm/ 40mm	☐	☐
Subsoil drain filter media grading	☐	☐
Grading to sewer bedding/surround material	☐	☐
Grading to water main bedding/surround material	☐	☐
Grading to stormwater drainage bedding material	☐	☐
Water main pressure tests	☐	☐
Water main bacteria test	☐	☐
Water meter installation details	☐	☐
Water main trench compaction	☐	☐
Sewer inspection and testing certification	☐	☐
Sewer pressure tests	☐	☐
Sewer main trench compaction	☐	☐
Sewer main closed circuit television report	☐	☐
Stormwater main trench compaction	☐	☐
Stormwater main closed circuit television report	☐	☐
Concrete testing	☐	☐
Other testing as specified-	☐	☐
Dust complaint resolved	☐	☐
Other complaints resolved-	☐	☐
Payments		
Maintenance Bond receipt number or LD	☐	☐
Sewer connection payment and receipt number	☐	☐
Water connection payment and receipt number	☐	☐
Other payments-	☐	☐

(Note- This is not a comprehensive list and the applicant is requested to include additional items when applicable.)

Verification by Consultant……Date……

Figure 2 - Certificate of Supervision

It is hereby certified that all inspections and supervision were carried out at the appropriate stages of construction. The supervision and testing associated with the works are in accordance with the specifications, documentation and requirements of the relevant local government codes and policies. The Supervisor possesses appropriate recognised qualifications and experience.

Signature…….. Date……..
Qualification……..
Company ……..

this page purposely
left blank

Chapter 3 - Reconfiguration

9.3.1 Purpose

(1) The purpose of this chapter of the policy is to -

(a) ensure reconfiguration occurs in a manner that supports the preferred outcomes of the zone in which it is proposed to locate;

(b) provide a reconfiguration design process that promotes achievement of the outcomes established in the Redlands Planning Scheme.

9.3.2 Applicabilit y

(1) This chapter of the policy applies to all development applications involving reconfiguration -

(a) that creates lots by Standard Format Plan, whether or not having a Community Management Statement;

(b) that creates lots by subdividing another lot by -
(i) building format plan, where subdividing land on or below the surface of the land; or
(ii) volumetric plan;

(c) rearranging the boundaries of a lot by registering a plan of subdivision; or

(d) dividing land into parts by agreement; or

(e) creating an easement giving access to a lot from a constructed road.

(2) Outcomes relating to reconfiguration primarily address residential development, as they constitute the greatest proportion of applications.

(3) Where required, substitute any reference to 'residential' with the necessary type of development and modify the criteria to suit the scale of buildings, necessary vehicle types and other elements influencing the development.

9.3.3 Reconfiguration Design Process

The Reconfiguration Code promotes the use of a design process when preparing proposals for the reconfiguration. Diagram 1 describes each phase of the design process promoted by this code.

Diagram 1 - Design Process Flow Chart

Phase 1 – Site Analysis	**All applications for the reconfiguration, except building format plan or volumetric plan**
↓	
Phase 2 – Structure Plan	■ **Medium and major standard format plan reconfiguration, whether or not including a Community Management Statement** ■ **Proposals for staged reconfiguration** ■ **When requested by the local government**
↓	
Phase 3 – Subdivision Plan	**All applications for the reconfiguration**
↓	
Phase 4 – Development Site Plan	**Where specified**
↓	
Phase 5 – Building Design Plan	**Where Specified**
↓	
Phase 6 – Property Management Plan	**Where Specified**
↓	
Phase 7 – Construction Management Plan	**Where specified**

9.3.4 Phase 1 - Site Analysis

(1) The Site Analysis is the preparation of a graphical plan or a series of thematic plans, supported by necessary report/s that describes the opportunities and constraints associated with the site and surrounding land.

(2) A Site Analysis Report and Plan/s is the end product of the investigation undertaken.

(3) The checklist provided below is not intended to be exhaustive. The attributes and issues of the site will determine the extent of information necessary for the preparation of a Site Analysis Plan.

Checklist - Site Analysis Information Requirements
■ North point.
■ Drawn to the required scale. Refer to Chapter 2 - Documentation and General Conditions of this policy.
■ Full real property description of the premises and adjoining premises.
■ Site size and dimensions of all boundaries of the premises.
■ Description of zones of adjoining and adjacent premises.
■ Location, width and purpose of all existing easements or encumbrances, including right of ways.
■ Site location plan that provides a suitable context.
■ Description of present and past land uses.
■ Location of any existing buildings, fences and other improvements to the premises, including infrastructure.
■ Description of adjoining road/s, including their category, pedestrian and cycle paths.
■ Location of any driveways to the premises and to adjoining and adjacent premises.
■ Any significant views to or from the premises.
■ Direction of prevailing winds or breezes.
■ Summer and winter sun paths.
■ External environmental emission sources that may affect the premises.
■ Contours at 0.25 metre intervals; or ■ Where the premises is greater than 2,000m^2 illustrate contours at 0.5 metre intervals.
■ Slope analysis, which illustrates land that is 1 in 7 or steeper, 1 in 7 to 1 in 10, 1 in 10 to 1 in 15, and less steep than 1 in 15. This information will vary depending on the premises.
■ All natural drainage flow paths within or entering the premises from external areas.
■ The line, bank and high water mark of any existing waterway or wetlands, permanent or intermittent, and foreshores within or adjoining the premises.
■ Flood-prone land at 1 percent AEP (1 in 100 year ARI), 20 percent AEP (1 in 5 year ARI) and 50 percent AEP (1 in 2 year ARI) and, where adjoining a foreshore, 2.4 metre AHD (1 percent AEP storm tide levels) and 1.6 metre AHD within and adjoining the premises.
■ Bushfire hazard zones within or adjoining the premises.
■ Acid sulfate soils, present or potential, on the premises.
■ Geotechnical information relating to soil types and permeability. ■ Where the site will require on-site wastewater treatment, soil testing complies with *Australian Standard 1547:2000 - On-Site Domestic Wastewater Management*.
■ Contamination - Where the existing use of the premises, or if the premises is vacant with no existing use, the most recent use, included intensive agriculture or any other agricultural use involving the use of pesticides and herbicides or other toxic materials is expected, that at least a Stage 1 investigation be undertaken in accordance with the *Draft Guidelines for the Assessment and Management of Contaminated Land in Queensland.*
■ Identified environmental values within or in proximity to the premises, specifically where the premises forms part of a greater habitat, community or corridor.
■ Significant trees within, adjoining or adjacent to the premises.
■ Items of topographic, landscape or scenic interest that exhibit one or more of the following characteristics - ‣ Is important to the scenic quality of the local government area; ‣ Establishes the scenic character and identity of the local area because it - contains a rare or uncommon landscape, such as a ridgeline, escarpment or headland; is a good representative example of natural landscape types common in the local area, such as a foreshore associated with a waterway; visually screens inharmonious, intrusive or unattractive development and/or movement system/s.
■ Items listed in Part 9 - Schedule 4 - Heritage Place Register, whether built, natural or indigenous.

Diagram 2 - Site Analysis

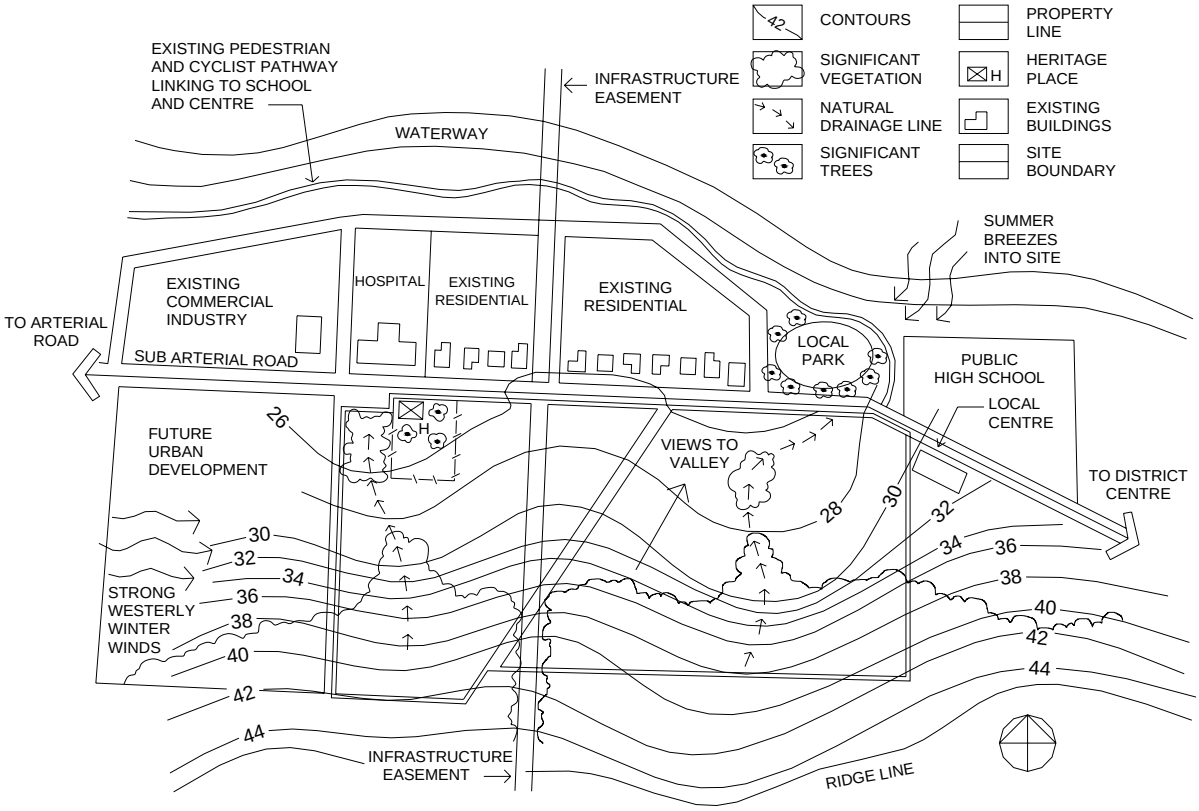

9.3.5 Phase 2 - Structure Plan

(1) In most cases, a Structure Plan is prepared as a precursor to Subdivision Plans and is a required component of development applications for -

(a) Creation of lots by Standard Format Plan, whether or not having a Community Management Statement for -
(i) Medium and major reconfiguration;
(ii) Staged reconfiguration;

(b) Development proposed on sites larger than 2,500m^2 in any urban zone, whether or not they involve the reconfiguration of land; or

(c) A proposal which has the potential to impact on the pattern of development in an area.

Note -

While items (b) and (c) may not necessarily involve the reconfiguration of land, a Structure Plan may still be required.

(2) A Structure Plan is a conceptual plan and incorporates the major elements of the locality surrounding the development site.

(3) At the Structure Plan Phase, site development should be shown conceptually to allow flexibility, refinement and improvement, as detailed design considerations become known.

(4) The scope of a Structure Plan is tailored to match the scale and likely impact of the individual development and where necessary, be supported by technical information that provides the rationale of the planning framework adopted.

(5) A Structure Plan establishes a framework to guide the development of the site and to integrate the proposal with existing or potential surrounding development. The Structure Plan provides a comprehensive approach for the reconfiguration and/or future use of the land and identifies, among other elements -

(a) road networks;

(b) open space networks;

(c) community facilities;

(d) infrastructure;

(e) environmental conservation measures;

(f) pedestrian and cycle links;

(g) mix of intended land uses.

(6) Land identified in the Site Analysis as having environmental or scenic values is identified in the Structure Plan. In some cases, it may be possible to carefully and sensitively develop part of a constrained site, for example, through lower development density, or the clustering of development.

(7) Land that is constrained and unable to support development is identified on the Structure Plan.

(8) Where no existing Structure Plan has been adopted, new development is designed to integrate with existing land uses and open space, road, service and infrastructure networks.

(9) To ensure the local government considers the Structure Plan for future development of a premises, it may adopt a Structure Plan by -

(a) Preparing on its own initiative or in partnership with others, a Structure Plan that is incorporated into the Redlands Planning Scheme; or

(b) Approving a Reconfiguration Application that incorporates a Structure Plan; or

(c) Advancing a Structure Plan, following approval of a Reconfiguration Application through its subsequent incorporation into the Redlands Planning Scheme.

(10) For staged reconfiguration or development, the Structure Plan will act as a measure by which subsequent development applications will be assessed.

Checklist - Structure Plan Information Requirements
■ Illustrate the topography of the site through contours at 0.5 metre intervals. Where the site is less than 2000m^2 illustrate contours at 0.25 metre intervals. Where these requirements are not practicable, show contours at intervals that adequately indicate the topography of the area.
■ Identify the opportunities and constraints established through site analysis.
■ Illustrate the location, mix and density of the range of proposed land uses.
■ Illustrate how the proposal fits into the overall road hierarchy, supported by traffic assessment if necessary.
■ Demonstrate that consideration has been given to potential reconfiguration and development of adjoining land.
■ Illustrate, where applicable, the approximate location and extent of on-site and nearby open space, community, retail, childcare and education facilities, among others.
■ Illustrate the general location of public open space and linkages within the site.
■ Illustrate, where applicable, the notional pedestrian and cycle network and links to external neighbourhoods or open space areas.
■ Illustrate existing and proposed public transport routes and modes.
■ Broadly illustrate physical infrastructure to be provided.
■ Illustrate the location of overland stormwater flow paths and proposed management measures, including all on-site detention/retention areas.
■ Illustrate the initial concept for stages of the development.
■ Demonstrate that consideration has been given to all relevant environmental issues, including those pertaining to any short-term and cumulative impacts on ecological, scenic and heritage values.

Diagram 3 - Structure Plan

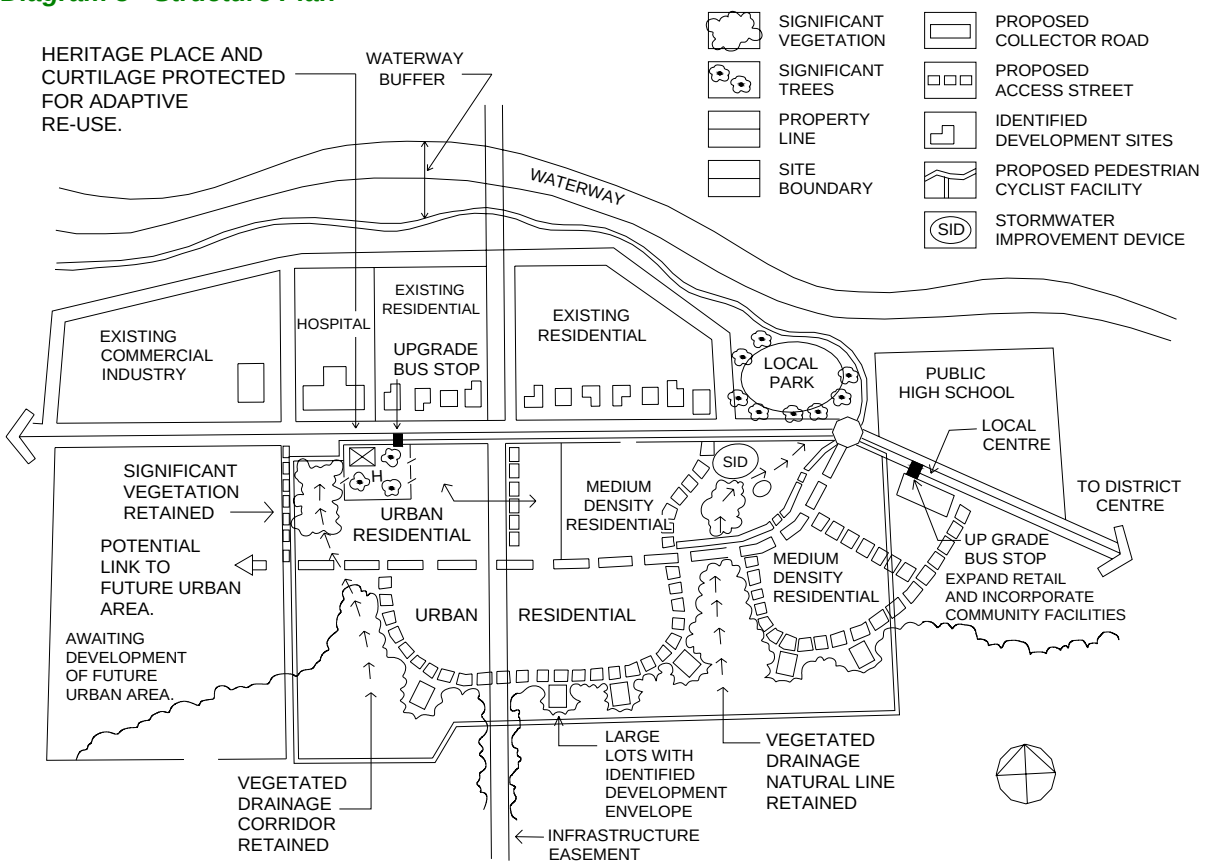

9.3.6 Phase 3 - Subdivision Plan

(1) The Subdivision Plan is the third phase in the reconfiguration design process.

(2) The Subdivision Plan requires sufficient detail to allow the local government to fully assess an application.

(3) The Subdivision Plan should include a report that describes how the plan addresses the Site Analysis and, where required, the Structure Plan components of the Design Process.

(4) The following checklist complements the requirements of Chapter 2 - Documentation and General Conditions of this policy.

Checklist - Reconfiguration Plan Information Requirements
■ North point upwards.
■ A date and drawing number of the plan.
■ The full real property description of the land and adjoining lots.
■ Site size and dimensions of all boundaries of the land and proposed lots.
■ A site location plan that provides a suitable context.
■ Contours at 0.5 or 0.25 metre intervals.
■ Pre and post development, preliminary engineering long and cross sections at various locations across the site when the land that is steeper than 1 in 7 (15 percent), where fill or excavation are required and to identify the location and extent of all retaining walls, batters, terracing, constructed slopes or similar structures.
■ Pre and post development levels in reference to Australian Height Datum (AHD).
■ Location of 1 percent AEP flow levels and, where adjoining foreshore areas, 2.4 metre AHD (1 percent AEP storm tide levels).
■ Lot drainage design and reconfiguration stormwater management design, including the location, size and design of all conveyance and discharge controls.
■ Development and lot infrastructure location including location and/or modification to any existing infrastructure.
■ Trees and vegetation retained on-site and areas proposed to be cleared.

(5) The following details should be shown to the extent relevant to the particular proposal -

■ Details of stage boundaries, including the area of each stage, the number of lots and, where residential development, the mix of housing types and densities for each stage.
■ Location and size of any significant trees, plants or built features proposed to be removed on or adjoining the premises.
■ Existing and/or proposed waterways and wetlands, including artificial wetlands where they are a component of the site's stormwater management design.
■ Proposed open space, embellishments, recreational facilities or similar community outdoor places, and the location of any existing parks and reserves adjoining the land.
■ Landscape treatments and street tree planting documentation in accordance with the Landscape Code and Chapter 11 - Landscaping, of this policy.
■ A range of detailed street sections, depending on the variety of road types within and adjoining the development.
■ Names, location and widths of rights of way, easements and roads within and nearby to the site (within 100 metres).
■ Identification of roads where direct lot access is not permitted or the number of access points is restricted.
■ Lot truncations.
■ Location and method of traffic speed control devices.
■ Road widening.
■ Type and treatment of intersections.
■ Location and design of pedestrian or cycle paths outside the road reserve.
■ Location and design of proposed pedestrian and/ or cycle paths within the road reserve, that is based on a strategy of - ▸ internal and external desire lines; ▸ existing paths; ▸ road design.
■ Location of existing and proposed bus routes and stops.
■ Identification of lots designed for small lot housing, dual occupancy and multiple dwellings or any other specific uses.

9.3.7 Phase 4 - Development Envelopes

(1) Development envelopes are required to ensure the development has reasonable protection from impacts or risks and achieves acceptable urban design and/or environmental outcomes.

(2) A development envelope identifies all development associated with the proposal, including -

(a) any clearing required to carry out the proposed use of the land;

(b) bushfire hazard zones including fuel free and fuel reduced areas;

(c) infrastructure;

(d) stormwater management;

(e) on-site wastewater treatment areas, where the site is not connected to a reticulated sewerage system;

(f) location of any buildings, including housing, sheds and garages;

(g) recreation facilities, such as swimming pools or tennis courts;

(h) access.

(3) Any subsequent buildings, structures or activities will be required to locate within the nominated area as shown on the development envelope.

(4) Development envelopes will be requested where -

(a) the development is in specific zones, or

(b) investigation identifies constraints associated with the land regardless of the zone.

(5) These constraints may include but are not limited to -

(a) environmental values;

(b) scenic values;

(c) bushfire risk;

(d) slope;

(e) soil conditions;

(f) need for on-site wastewater management;

(g) flood conditions;

(h) environmental emissions.

Diagram 4 - Development Envelope

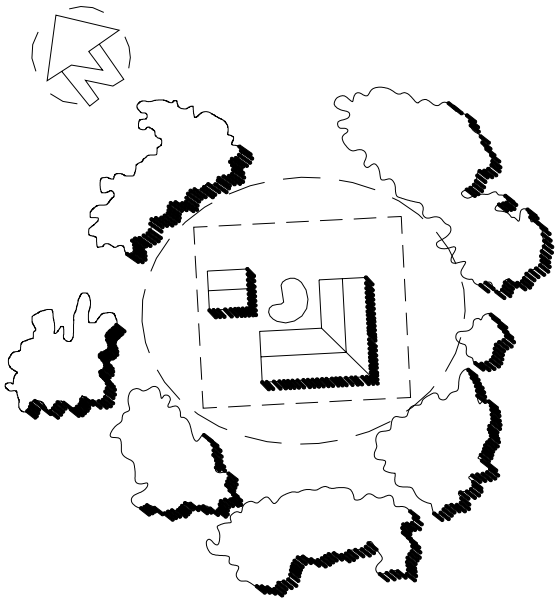

9.3.8 Phase 5 - Building Design Drawing

(1) Reconfiguration proposals that incorporate small lot housing, dual occupancy, multiple dwellings, aged persons and special needs housing and apartment buildings require the preparation of building design drawings.

(2) Building design drawings are based on the specific requirements detailed in the relevant Use Code for the housing type proposed.

(3) Plans should be accompanied by elevation drawings at a scale of not less than 1:100 with dimensions, indicating -

(a) major elevations noting colours and finishes of building materials;

(b) the relationship of the elevations to natural ground level, showing all proposed cut and fill and associated retaining walls or other structures;

(c) cross-sections of the building, showing the relationship to existing and proposed topography.

(4) Where there are two or more dwellings on the lot the plans should -

(a) clearly demonstrate the relationship between them in terms of access, privacy (visual and acoustic), outdoor areas;

(b) be supported by -
   (i) shadow diagrams for 9.00am, 12.00am and 3.00pm on June 21, which incorporate proposed or existing fencing impacts;
   (ii) perspective or similar drawings that provide a graphical image of the development.

(5) Where impacts are expected on adjoining properties, the building design plans should provide sufficient information to illustrate how the proposal ameliorates the impacts.

(6) The following checklist complements the requirements of Planning Scheme Policy 8 - Housing.

Checklist - Building Design Drawing Information Requirements
■ North point
■ Lot size and dimensions
■ Side, rear and frontage setbacks
■ Building heights and finished site and floor levels
■ Building and hot water energy efficiency rating for each dwelling
■ Entrance points to the dwelling
■ Primary and other private open space areas
■ External storage spaces and structures, including pergolas and sheds, among others
■ On-site parking and access, including turning-circle diagrams and manoeuvring requirements.
■ Clothes drying and other utility areas, including waste and recycling storage and collection areas
■ Fencing height and construction
■ Location and dimensions of driveway/s and or pathways
■ Location of communal outdoor areas, where land is to be subdivided in accordance with the Community Management Statement
■ Landscape construction plans
■ Stormwater drainage design, including any harvesting systems

9.3.9 Phase 6 - Property Management Plan

(1) A Property Management Plan is a document and graphic plan that is intended to provide a long-term overview of the management of the entire site.

(2) The Plan details information relating to fencing, feral animal control, weed removal and control, site rehabilitation, erosion prevention and nutrient control.

(3) Where it is proposed that the site will be used for agricultural or other potentially impacting uses, the Plan should demonstrate the efficient and sustainable use of the land while maintaining and protecting the site's ecological or scenic values.

(4) Refer to Planning Scheme Policy 11 - Rural Lands and Uses for additional requirements.

9.3.10 Phase 7 - Construction Management Plan

(1) The Construction Management Plan identifies detailed information on the construction phase of the development. Matters contained in the plan, include, but are not limited to -

(a) all disturbance and works associated with the development;

(b) stockpile/storage areas of building materials;

(c) methods of protecting native vegetation from disturbance;

(d) methods of clearing and removal of vegetation, specifically where fauna species are known to inhabit the site;

(e) area, total volume and levels of all cut and fill;

(f) the location and method of providing utilities, waste water systems and access driveway, among other facilities.

(2) The plan should also include an Erosion Prevention and Sediment Control Plan or Soil and Water Management Plan as required by Chapter 4 - Erosion Prevention and Sediment Control of this policy.

Chapter 4 - Erosion Prevention and Sediment Control

9.4.1 Purpose

(1) The purpose of this policy is to -

(a) Set out the requirements for the preparation and submission of Erosion Prevention and Sediment Control (EPSC) plans and/or technical reports associated with development applications under the planning scheme;

(b) Provide information relating to control and management of erosion and sediment for development within the local government area;

(c) Ensure that the environmental values of local waterways and Moreton Bay are protected from land disturbing development and that all development addresses the requirements of the -
(i) *Integrated Planning Act 1997*;
(ii) *Environmental Protection Act 1997*;
(iii) *Environmental Protection (water) Policy 1997*;
(iv) *South East Queensland Regional Water Quality Management Strategy*.

9.4.2 Applicabilit y

(1) This policy applies to all development applications on sites where earthworks and/or clearing of vegetation is proposed under the planning scheme.

9.4.3 General

(1) The construction of erosion and sediment control works is in accordance with AUS-SPEC#1 unless otherwise specified in -

(a) the Erosion Prevention and Sediment Control Code; or

(b) this chapter.

9.4.4 Stormw ater Management

(1) The local government is committed to minimising erosion and sedimentation, and preventing the degradation of the ecological health of the receiving environment which can result from development, both during and after construction. The local government's *Urban Stormwater Management Plan* and *Waterway Management Plan* identify the environmental values and water quality objectives that will ensure the protection and/or enhancement of the receiving environment.

(2) Effective waterway and stormwater management involves -

(a) integrating both permanent and temporary water quality control measures and Stormwater Quality Improvement Devices (SQIDs) into the design;

(b) programming and timing of works to minimise soil erosion;

(c) an ongoing commitment to the monitoring and maintenance of water quality control measures;

(d) minimising the volume of stormwater treated by maximising infiltration into the ground;

(e) making use of stormwater for recycling;

(f) minimising the area of disturbance by staging works and diverting uncontaminated stormwater around disturbed areas;

(g) minimising the impact on receiving waters by protecting and enhancing the riparian areas of waterways and drainage lines within the site.

9.4.5 Erosion and Sediment Control Plan

9.4.5.1 General

(1) An erosion and sediment control program including plans and specifications are prepared for both temporary and permanent control of sediment, erosion and gross pollutants.

(2) The Consultant Engineer is to prepare the sediment and erosion control plan in accordance with -

(a) the Erosion Prevention and Sediment Control Code;

(b) this chapter;

(c) the Stormwater Management Code;

(d) Chapter 6 - Stormwater Management of the Infrastructure Works Policy.

(3) The erosion and sediment control plan is to show, as a minimum, the information required by Chapter 2, Documentation and General Conditions, section 9.2.5.17.

(4) The design of proposed Erosion Prevention and Sediment Control (EPSC) measures on-site should be dependent on the level of risk associated with that site. Sites identified as having a higher risk will require a higher standard of EPSC than low risk areas. Factors that create higher risk areas include -

(a) highly erosive soils;

(b) steep slopes;

(c) close proximity to a sensitive ecosystem;

(d) seasonal weather conditions.

(5) An EPSC plan should demonstrate that the proposed methods used to control sediment are sufficient for that site.

(6) Upon agreement by the local government to the adequacy of the measures proposed, the sediment and erosion control plan is produced as a drawing forming part of a construction set.

(7) It is emphasised that no matter which measures are selected and implemented, the Contractor is to properly maintain them to ensure that they adequately fulfil their function, in the opinion of the local government.

9.4.5.2 Site Supervision and Works

(1) The Erosion Prevention and Sediment Control plan and construction notes are signed by the nominated person ultimately responsible for the site and will be used to verify compliance.

9.4.6 Information Requirements

(1) To assist applicants, this policy identifies the level of information required for development based on the total area of land where the soil surface will be exposed. This includes -

(a) areas of excavation and fill;

(b) vegetation removal;

(c) driveways;

(d) accessways.

(2) Development that disturbs between 600m^2 and 1000m^2 of soil requires an Erosion Prevention and Sediment Control Plan that contains the following information -

(a) property details such as address, real property description, total site area;

(b) north point and scale;

(c) property boundaries and adjoining roads;

(d) existing land contours at 0.5 metre intervals;

(e) location of proposed flow paths flowing through, adjoining or off the site;

(f) outline of the development showing clearly all areas which will be disturbed;

(g) proposed vehicle access;

(h) extent of excavation or fill;

(i) location of proposed stockpiles;

(j) location of proposed temporary erosion prevention and sediment control measures;

(k) an explanation of any changes to the measures as the works proceed;

(l) supplementary notes detailing inspection and maintenance management.

(3) At this level, the plan is at a scale of at least 1:200 and identifies the erosion prevention and sediment control measures proposed for the site.

(4) For development that disturbs an area greater than 1000m^2, erosion prevention and sediment control measures are incorporated as a component of the site stormwater management plan.

9.4.7 Permanent Methods of Waterway and Stormwater Management

(1) Permanent Stormwater Quality Improvement Devices, On Stream measures, are works implemented at the direction of the local government to control run-off water quality beyond the initial construction and maintenance stages. Removal of such structures, if necessary, remains the responsibility of the local government.

(2) Permanent methods for stormwater management aim to ensure that there is no deterioration of the environmental values and water quality objectives of receiving waters, and that the volume of stormwater runoff which occurs as a result of development is minimised.

(3) The permanent methods of stormwater management include, but are not limited to -

(a) protection and enhancement of riparian zones of waterways and drainage lines;

(b) incorporation of water sensitive urban design principles including the minimisation of impervious surfaces so as to maximise stormwater infiltration;

(c) installation of Stormwater Quality Improvement Devices (SQIDs) such as trash racks, litter baskets, sediment traps, gross pollutant traps, detention basins, constructed wetlands and the like;

(d) natural channel design for constructed drainage lines in accordance with *Natural Channel Design Guidelines*, BCC December 2000;

(e) consideration of on-site stormwater recycling options.

9.4.8 Temporary Methods of Waterway and Stormwater Management

(1) Temporary Water Quality Control, Off Stream measures, is required to control and filter the run-off from areas disturbed by the contractor's activities. These erosion and sediment control measures are the first items constructed when work begins. Removal of these temporary measures remains the decision of the local government.

(2) The Contractor maintains all sediment control measures proposed on the sediment control plan to the satisfaction of the local government.

(3) The temporary methods for waterway and stormwater management are based on an environmental risk assessment approach, which includes consideration of -

(a) soil type;

(b) slope;

(c) seasonal factors;

(d) type and size of development;

(e) duration of site disturbance;

(f) sensitivity and proximity of the receiving environment.

(4) In deciding the temporary methods for waterway and stormwater management, consideration is given to -

(a) minimising contaminated stormwater requiring cleanup treatment by diverting stormwater flow away from disturbed areas;

(b) minimising erosion and sediment transport from disturbed areas by -
(i) programming the works to minimise the area of exposed soils at any one time;
(ii) topsoiling and seeding of disturbed areas within 7 days of final trimming of earthworks and establishment of 70 percent ground cover within 30 calendar days;
(iii) when proposing the use of Stormwater Quality Improvement Devices (SQIDs) as construction phase stormwater controls, it is demonstrated that the SQID is capable of treating operational phase stormwater;
(iv) installation of temporary erosion and sediment control measures as close as practicable to the sources of sediment. Reliance on sediment basin/s at the bottom of the development as the only means of sediment control is not acceptable;

(c) for developments greater than 1 hectare, provision of a sediment basin/s designed and sized in accordance with the *Sediment Basin Design, Construction and Maintenance Guidelines*, BCC January 2001.

9.4.9 Maintenance of Waterway and Stormwater Management Measures

(1) All temporary waterway and stormwater management measures are inspected -

(a) at least daily when work is occurring on the site and weekly when work is not occurring on the site;

(b) within 24 hours of expected rain;

(c) within 18 hours following a rainfall event.

(2) Maintenance of erosion and sediment control measures occurs in accordance with Table 1.

Table 1 - Maintenance of Erosion and Sediment Control Measures

Type of erosion and sediment control measure	Maintenance trigger	Timeframe for completing maintenance
Sediment Basins	When settled sediment exceeds the volume of the sediment storage zone. Refer to *Sediment Basin Design, Construction and Maintenance Guideline*, BCC, 2001.	Within 7 days of the inspection
Other temporary erosion and sediment control measures	The capacity of the erosion and sediment control measure falls below 75 percent.	By the end of day on which it was inspected

(3) The local government reserves the right to seek alterations to temporary erosion and sediment control measures throughout the construction period if it is believed that measures are inadequate for the particular site.

(4) Applicable guidelines include -

(a) *AUS-SPEC #1- Control of Erosion and Sedimentation. Queensland Development Construction Specification C211*.
(b) *Soil Erosion and Sediment Control Guidelines for Construction Sites* - Institute of Engineers, Australia, 1996;
(c) *Natural Channel Design Guidelines* - Brisbane City Council, December 2000;
(d) *Sediment Basin Design, Construction and Maintenance Guidelines* - Brisbane City Council, January 2001;
(e) The publications, *Best Practice Guidelines for the Control of Stormwater Pollution from Building Sites* and *Erosion and Sediment Control on Residential Building Sites*, are the local government's recommended references and are available free of charge from the local government.

this page purposely
left blank

Chapter 5 - Road and Path Design

9.5.1 Purpose

(1) The purpose of this chapter of the policy is to support the provisions of the Reconfiguration Code and the Infrastructure Works Code for the design of roads and paths under the planning scheme.

(2) In supporting these codes this chapter augments the provisions of the following -

(a) *Queensland Streets;*

(b) *Queensland Urban Drainage Manual* (QUDM);

(c) *AUSTROADS Parts 13 and 14*;

(d) Department of Main Roads design manuals.

9.5.2 Applicability

This chapter applies to all applications under the planning scheme for construction of new roads and paths, or alterations to the design of existing roads or paths within the planning scheme area.

9.5.3 Road Function, Width and Movement Network Design

9.5.3.1 General

(1) The local government's approved specifications for road construction works conforms to *AUS-SPEC # 1 - Construction*, except as amended in this policy.

(2) The use of the word road in this chapter may also include streets but not vice versa.

9.5.3.2 Streets

(1) Streets are designed in accordance with the requirements of *Queensland Streets* except as specifically described in relation to conditions of reconfiguration approval for developments, or as specified in this chapter of the policy.

(2) *Queensland Streets* is the principal document for the design of reconfiguration layouts. This chapter of the policy is intended to augment this document and takes precedence.

9.5.3.3 Roads

(1) Where conflict exists, this chapter of the policy takes precedence.

(2) Roads are designed in accordance with the requirements of -

(a) *Queensland Streets*;

(b) *Queensland Transport Design Manuals*;

(c) *AUSTROADS*;

(d) this chapter of the policy.

(3) Industrial uses, commercial uses and park residential roads are designed based on -

(a) *Queensland Streets*;

(b) this chapter of the policy;

(c) *AUSTROADS*;

(d) Department of Main Roads design criteria.

(4) Park residential streets are those streets serving areas zoned Park Residential in the planning scheme. Commercial streets are those streets servicing commercial activity in the planning scheme.

9.5.4 Street And Road Types

(1) For logical and economical street design, it is a pre-requisite that the purpose of each road and street is determined and the future traffic is predicted.

(2) *Queensland Streets* describes the characteristics of street types and is the basis for classification of streets and roads.

(3) Residential streets and other roads are classified under the requirements of the *Local Government Act*. The street and road types referred to are those contained in *Queensland Streets* and as detailed in the local government's approved standard drawing R-RSC-15.

(4) Table 1 identifies the road classifications adopted for residential streets.

Table 1 - Road Classifications

Type A	Type B	Type C
Access Street Access Place	Collector Street	Trunk Collector Street

9.5.5 Road Naming Guideline

9.5.5.1 Receipt of Development Application for Reconfiguring a Lot

(1) An application for street name/s may be lodged as part of a reconfiguration application.

(2) In this case, the Land Development Team will commence processing the street name/s application in conjunction with the reconfiguration application.

9.5.5.2 Research of Street Names

(1) The applicant is required to submit one (1) preferred and two (2) alternative street names for each street in the development.

(2) The following issues will be considered when researching proposed street names -

(a) How the proposed street designation comprising street, close, drive and similar names complies with the road's proposed function as part of the greater road network such as arterial, sub-arterial and trunk collector roads and streets;

(b) Ease of access in finding and navigating streets;

(c) Possible future impacts from the development on the house numbering sequence;

(d) Promotion of local identity through naming streets based on significant historical or geographical features;

(e) Views held by the Divisional Councilor on behalf of local residents.

(3) The naming of new roads within or adjoining a lot reconfiguration should –

(a) Have short names where possible;

(b) Have a common theme for major or medium reconfigurations;

(c) Have a relationship to the historical context of the area;

(d) Have a relationship to existing themes of adjacent areas;

(e) Promote local heritage through the use of names of local people of significance;

(f) Not be a combination of names. One word names are preferred;

(g) Not be difficult to spell or pronounce;

(h) Not be names of infamous characters or words that are profane or socially unacceptable;

(i) Not duplicate or be similar to other road names in the city;

(j) Not be names which advertise commercial entities unless they are of local significance;

(k) Not be a contrived name. They should be an actual name.

(4) The naming of new roads should be in accordance with Table 2.

Table 2 - Road Naming Options

Road Classification	Naming Options for Road Types
Access Place (cul de sac)	Court; Close or Place.
Access Road	Street; Terrace; Vista; Circuit or Crescent.
Collector Road	Street; Avenue; Way; Drive; or Boulevard.
Trunk Collector Road	Street; Road; Avenue; Way; Drive; Boulevard or Parade.

(5) Roads should conform to Table 3.

Table 3 - Road Type Description

Road Classification	Naming Options for Road Types
Crescent or Circuit	Loop road that connects to the same road at separate locations
Esplanade	Located along a permanent waterway, lake or foreshore
Avenue, Drive, Parade, Boulevard or Way	A road that is extensively tree lined and in an appropriate location
Trunk Collector Road	Highway, Freeway, Motorway, Bypass

9.5.6 Street Layout Requirements

(1) Streets are positioned in relation to drainage requirements, particularly overland stormwater flow paths, and control of traffic movements are investigated before submission of the road and lot layout to the local government. The preliminary investigation results are submitted in conjunction with the road and lot layout.

(2) Downhill culs-de-sac are not acceptable unless a park or drainage reserve of sufficient width is provided. If approval is granted, provision is made to minimise the quantity of overland flow by provision of additional entry structures.

(3) The lot layout may require amendment at the engineering design stage if the width of the overland flow path is insufficient. The minimum width is 15 metres.

(4) Traffic volumes maintain the limits specified by *Queensland Streets*.

9.5.6.1 Engineering Requirements

(1) The ideal locations resulting from consideration of traffic and development layout requirements are designed to satisfy engineering requirements.

(2) The engineering factors affecting road location and layout include -

(a) Grading;

(b) Sight distance;

(c) Alignment;

(d) Intersection location;

(e) Access.

(3) Although the engineering design of roads is the responsibility of the Consultant Engineer, it is essential that the Surveyor or Planner preparing the development proposal is fully aware of the engineering requirements for the various types of roads to ensure that the road locations and layout proposed are satisfactory in this respect. Major alterations to the development layout may be necessary to enable engineering requirements to be fulfilled. Engineering requirements include drainage overland flow paths, vertical alignment and horizontal alignment. The Consultant Engineer is responsible for a layout to suit the above requirements.

(4) Before preparing the reconfiguration layout plan, the applicant is to consult the local government to ascertain if a Structure Plan already exists for the area in question.

(5) Approval of the developmental layout is subject to stormwater design calculations being submitted to satisfy the local government that the overland flow from a storm of 1 percent AEP (100 year ARI) can be conveyed through the development clear of all proposed lots.

(6) Full and accurate topographical information is provided at this stage, to enable an accurate assessment of the suitability of the proposed road locations.

9.5.6.2 Road Capacity

(1) Traffic requirements are based on the total traffic which will use a road, and not only on the requirements of the development under consideration.

(2) The applicant provides the full road reserve width, for the class of road required for the ultimate traffic, in accordance with the local government's road planning layout.

9.5.6.3 Traffic Impact Report

(1) Where applicable, a detailed Traffic Impact Report is required to assess the impact that traffic associated with the proposed development will have on the adjoining road network.

(2) Issues addressed and presented in the Traffic Import Report include -

(a) Traffic impact on surrounding development and the adjacent transport network;

(b) Access to the proposed development;

(c) Maintenance of traffic flow efficiency and safety standards;

(d) Protection of the environment, in particular noise level alleviation;

(e) Maintenance of pedestrian and bicycle flow efficiency;

(f) Site consolidation to minimise fragmented roadside development;

(g) Parking impact of the proposed development.

(3) Details analysed and presented in the report include -

(a) Design year covering a 10 year planning horizon from the date of completion of the development;

(b) Clearly presented statistical details of the proposed development;

(c) Traffic generations by the proposed development, both daily and peak hours;

(d) Directional distribution of generated traffic, travel pattern and vehicle classification;

(e) Current traffic volume/full turning movement volumes on affected existing roads and intersections. Vehicular volumes are classified into cars and commercial vehicles and are projected forward at appropriate growth rates;

(f) Impact of the development on pedestrian and bicycle movements, including access to existing linkages. Volumes are ascertained by the local government on a project by project basis;

(g) Analysis of intersections using the computer software program *SIDRA* or similar. Details to include -
(i) intersection treatment;
(ii) method of control;
(iii) delay;
(iv) capacity;
(v) traffic volume;
(vi) saturation levels;
(vii) queue lengths;
(viii) copies of input, output and graphical intersection layout from *SIDRA* or equivalent;

(h) Conceptual plan of intersection configurations showing -
(i) lane layouts;
(ii) turning radii;
(iii) storage lengths;
(iv) auxiliary lanes;
(v) medians;
(vi) shoulders;
(vii) footpaths/bikeways and other relevant information;
(viii) for signalised intersections, the same analyses and conceptual plans as per item (f); together with signals phasing diagrams from *SIDRA* or similar output;
(ix) any adverse effects on safety issues, capacities and levels of service of intersections and the road network and appropriate ameliorative measures suggested;
(x) all assumptions and references made in the traffic analyses;
(xi) all proposals for external road works are compatible with the Department of Main Roads future upgrading requirements.

(4) The Traffic Impact Report is prepared by a professionally qualified traffic engineer or transportation engineer.

(5) The Traffic Impact Report is submitted to the local government and the Department of Main Roads when applicable for assessment prior to consideration of engineering design and drawings.

9.5.7 Standard Road Widths

9.5.7.1 Residential Streets Type A, B, and C

(1) Notwithstanding the provisions of *Queensland Streets,* the minimum street reserve width for Type A, B and C streets conforms to Schedule 6 - Movement Network and Road Design. This is illustrated on approved standard drawing R-RSC-15.

(2) Appropriate intersection treatment and traffic calming devices are incorporated into the road design to ensure that speeds are kept down to an acceptable level in a residential street environment without restricting service vehicle access. Preferred solution s are illustrated in section 9.5.8 - Road Design Safety of this chapter.

(3) Notwithstanding the provisions of *Queensland Streets*, Type A, B and C streets and sub-arterial roads conform to approved standard drawing R-RSC-15.

(4) The performance criteria applicable for the design of the road reserve width are the relevant safety requirements and the provision of sufficient landscaping and green areas within road reserves. In achieving such performance requirements, irrespective of the approval lot/road layout, road reserves may have to be widened in places to compensate for such lost lot areas, while other sections may be narrowed down thereby keeping a minimum road reserve width of fifteen (15) metres not taking intersections into account.

9.5.7.2 Other Road Reserve Widths, Cross-Sections

(1) Roads other than residential streets are designed and constructed generally in accordance with *Queensland Streets* recommendations and approved standard drawings R-RSC-15.

(2) For the case of industrial roads, *Queensland Streets* provides deem-to-comply cross-sections.

(3) The local government approved standard drawings numbered R-RSC-2, R-RSC-3, and R-RSC-4 provide the basis for driveway crossover profile policy, the criterion being that a loaded vehicle is able to cross the verge and enter the property without bottoming on the surface of the driveway.

(4) The needs of bicycles are considered in the design of all road types and this may necessitate amendments to the standard cross section elements at the discretion of the local government.

(5) Design of bicycle facilities complies with -

(a) the local government's approved standard drawings P-RSC-2, P-RSC-4 and P-RSC-5;

(b) *Queensland Streets*;

(c) *AUSTROAD - Guide to Traffic Engineering Practice - Part 14 Bicycles*;

(d) the *Manual of Uniform Traffic Control Devices (MUTCD)*.

Note -

Refer Section 9.5.14 - Pedestrian and Bicycle Paths.

(6) The road reserve width at culs-de-sac is to provide for a minimum distance of 4 metres from the lip of the channel to the property boundary. The minimum radius at the head of a cul-de-sac in Urban Residential Zones is 8.5 metres to the lip of the channel.

9.5.7.3 Arterial Roads

(1) In general, when approval is given to a development proposal, the local government will nominate those roads which are designed as arterial, sub-arterial and trunk collector roads.

(2) Arterial roads are designed in accordance with the requirements of *Queensland Streets*, Department of Main Roads Design Manuals, *AUSTROADS* and this chapter of the Policy.

(3) Notwithstanding the recommendations of *Queensland Streets*, the local government requirements for sub-arterial roads conform to approved standard drawing R-RSC-15.

9.5.8 Road Design Safety

9.5.8.1 General

(1) The following is a list of some of the references required when designing for road safety -

(a) *AUSTROADS Part 5: Intersections at Grade*;

(b) *AUSTROADS Part 6: Roundabouts*;

(c) *AUSTROADS Part 12: Roadway Lighting*;

(d) *AUSTROADS Part 13: Pedestrians*;

(e) *AUSTROADS Part 14: Bicycles*;

(f) *AUSTROADS Part 15: Motor Cycle Safety*.

(2) Not withstanding the recommendations in *AMCORD* and *Queensland Streets*, the local government requires desirable standards for road design. This is particularly relevant to sight distance at round-a-bouts and intersections.

9.5.8.2 Signs and Road Markings

(1) All necessary warning signs, regulatory signs, direction signs and road markings, as directed by the local government are provided by the Developer.

(2) Signing, road marking and construction signing are in accordance with the *Manual of Uniform Traffic Control Devices (MUTCD*) and Department of Main Road's requirements, as amended from time to time. Additional relevant information may be obtained from AUSTROADS publications.

(3) The following signage and marking are provided -

(a) Street name signs at each intersection, in accordance with the local government's approved standard drawing R-RSC-11;

(b) Lane lines on all divided roads;

(c) Where the sight distance available is less than the desirable minimum, double unbroken centre lines are provided;

(d) At a temporary termination of road construction, such as a development or stage boundary, the following is erected -
   (i) on an arterial, sub-arterial, industrial or trunk collector road; a striped barrier board to local government requirements;
   (ii) on access streets, access places or collector roads; guide posts at 1.5 metre spacing as a minimum; barrier boards may be required by the local government to improve safety.

(4) The relevant sign reference number from the Department of Main Road's *MUTCD* is included on the plan for each sign.

(5) All signs and pavement markings are adequately dimensioned to ensure accurate setting out.

(6) Unless otherwise specified, a minimum of Class 1 reflective sheeting is used for all road signs. Class 2 reflective sheeting may be used for kerb side parking control signs.

9.5.8.3 Road Edge Guide Posts

(1) Road edge guide posts are provided at all locations where concrete kerb and channel is not constructed, such as at half road construction, tapers and ends of roads.

(2) Guide posts conform to the local government's approved standard drawings MR 1356.

9.5.8.4 Guardrails

(1) Guardrails are installed in accordance with the local government's approved standard drawings R-0180 and R-0181. Refer also to the Department of Main Roads drawings as approved by the Institute of Public Works Engineering Australia Queensland (IPWEAQ).

(2) For the warrants and locations of guardrails, refer to the Department of Main Roads *Urban Road Design Manual - Volume 1* (*URDM*).

(3) There may be circumstances where the local government may require guardrail in additional locations.

9.5.8.5 Pedestrian Fences

(1) Pedestrian fences are constructed in accordance with the local government's approved standard drawings G-0044 and G-0045;

(2) Fences are installed for pedestrians in accordance with the requirements of the Department of Main Roads *URDM - Volume 1* and the *Manual of Uniform Traffic Control Devices.* Care is taken to ensure that the fences do not constitute a hazard for vehicles and their occupants.

9.5.8.6 Tree Planting

(1) Street tree planting in medians and adjacent to carriageways conforms to the *Road Landscaping Manual* published by the Department of Main Roads, Queensland. Figure C5-4 in the manual indicates clearance zones between vehicular traffic and trees.

9.5.9 Geometric Design Standards for Roads

9.5.9.1 General

(1) Geometric design for residential streets complies with the requirements of *Queensland Streets* and *AUSTROADS*, except as specified herein.

(2) Other roads comply with *Queensland Streets*, Department of Main Roads (Qld) standards and as specified herein.

(3) Refer also to the *AUSTROADS* publications.

9.5.9.2 Maximum Radii of Vertical Curves

(1) Where kerb and channel is required, the following maximum radii are adopted to reduce the possibility of storm water ponding in the channel -

(a) Crest Curves maximum radius: 3000 metres;

(b) Sag Curves maximum radius: 1250 metres.

9.5.9.3 Vertical Curves at Intersections

(1) Where a side road joins at a "T" intersection, a reduced length of vertical curve in the side road is acceptable because of the lower traffic speed in the side road at the intersection. The minimum length of such a vertical curve is 7 metres.

(2) The nearest VC tangent point to the through road is located at, or outside of, the kerb line of the through road.

(3) The situation where a crest vertical curve masks the commencement of a horizontal curve is avoided, as such a combination is potentially dangerous.

9.5.9.4 Recommended Crossfall

(1) The normal crossfall of pavement and shoulders are -

(a) Asphaltic Concrete Surfaced Pavements: 2.5 percent;

(b) Bituminous Sealed Pavements and Shoulders: 3.0 percent;

(c) Graveled Shoulders: 5.0 percent.

9.5.9.5 Maximum and Minimum Crossfall

(1) Where steeper or flatter than normal crossfalls are required, for example at intersections, turning circles of culs-de-sac, or joining to existing construction the -

(a) maximum permissible pavement crossfall is 5 percent;

(b) minimum permissible pavement crossfall is 2 percent.

9.5.9.6 Median Crossfalls

(1) The maximum crossfall on grassed medians on divided roads is desirably 1 in 6 with an absolute maximum of 1 in 4. Refer also to Department of Main Roads design manuals.

(2) At median openings, the pavement crossfall does not exceed 5 percent.

(3) The longitudinal grade is also considered in relation to high vehicles turning through an intersection.

9.5.9.7 Split Level Roads

In general, development layouts are designed to avoid split level roads. Where this is not possible, prior approval to use split level roads is required from the local government.

9.5.9.8 Horizontal Alignment

(1) A truncation of the real property boundary for road and streets is provided at each intersection/deflection, such that sight distance is maintained for the design speed of the street.

(2) The minimum property boundary truncation at a 90° bend is 6 metre 3 chord.

(3) Pavement tapers to existing construction is designed in accordance with the current *NAASRA* or *AUSTROADS* publications based on the design speed.

(4) Tapers are constructed to the same standard as the proposed full road pavements.

(5) Kerb and channel radii for tapers where small deflections occur are as long as possible in order to improve appearance.

9.5.9.9 Vertical Alignment

(1) Notwithstanding the recommendations in *Queensland Streets,* vertical grades conform to the standards in Table 4 -

Table 4 - Maximum Road Grades

Road Classification	Desirable Maximum Grade	Absolute Maximum Grade
Sub-Arterial road		8 percent
Type C roads	8 percent	12 percent
Type A and B roads	16 percent	20 percent provided the length of that grade is less than 20 metres, and is no closer then 40 metres from an intersection, and the grade to that intersection is no greater than 12 percent.

(2) The maximum grade on type A and B roads may be varied provided it can be demonstrated by alternative methods that the safety of children on bicycles is not compromised.

(3) The maximum allowable grade from the end of the construction centre line at lip level to the centre of the head of a cul-de-sac is 5 percent.

(4) The minimum pavement centreline grade is 0.4 percent.

(5) The grading of kerb and channel normally conforms to the road centreline grading. However, at locations where the kerb and channel grading diverts from the centreline grade, such as at intersections or on super elevated curves -

(a) The minimum channel grade is 0.4 percent;

(b) Every endeavour is made to eliminate sudden changes of grade, by providing vertical curves of reasonable length.

(6) The desirable minimum level of a road at the lip of channel or edge of pavement is RL 2.4 AHD. Roads proposed below this level have a rigid pavement or alternatively, the Engineer is to demonstrate how the sub-soil drains can discharge freely without tidal infiltration.

(7) In situations where construction cannot be avoided below RL 2.4 AHD, the absolute minimum level of a rigid pavement is RL 2.0 AHD.

9.5.9.10 Boundary Roads

(1) An existing unsealed boundary road to a development is constructed to a standard no less than the greater of one half of a full width road or 6 metres from the channel lip line to the bitumen edge. A greater width may be specified in conditions of development approval depending on the traffic using the road.

(2) An existing sealed boundary road to a development is widened with kerb and channel constructed on an alignment determined by the local government. Pavement widening extends from the existing full depth road pavement edge and not from an existing sealed shoulder edge. It is the responsibility of the developer to determine if there is an existing sealed shoulder within the scope of the works for which the conditions of development apply.

(3) The Developer provides a minimum of the greater of 10 metres or two-thirds of the road reserve width for boundary roads.

9.5.9.11 Service Vehicle Road Manoeuvring

The following diagrams indicate the minimum dimensions for a 10.2 metre long standard service vehicle to manoeuvre at intersections, acute bends, no through roads and speed control devices -

Diagram 1 - Typical T Intersection Slow Point at Junction of Type A to B Streets

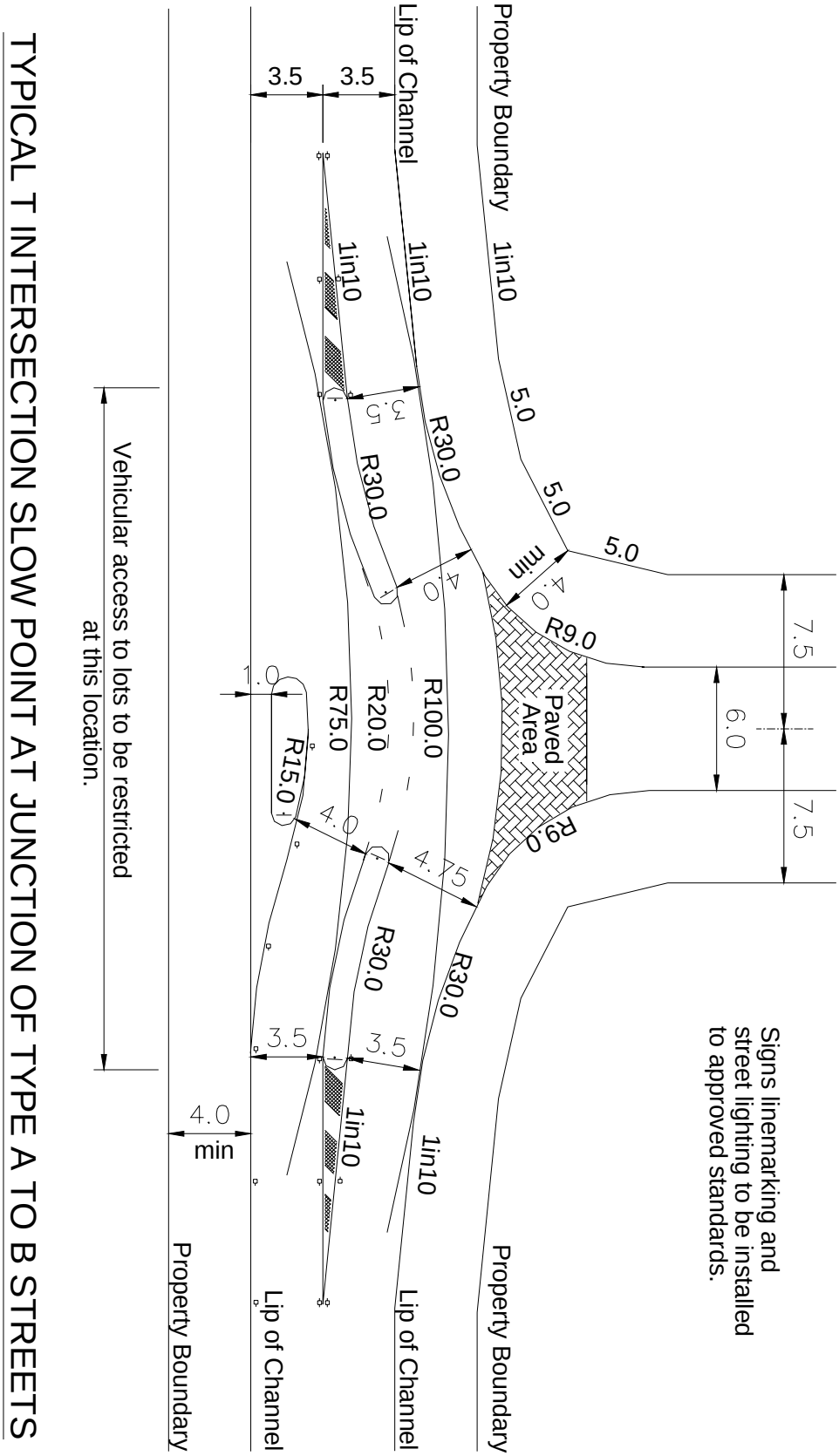

TYPICAL T INTERSECTION SLOW POINT AT JUNCTION OF TYPE A TO B STREETS

GUIDE ONLY

Diagram 2 - Typical "T" Intersection Splitter Island

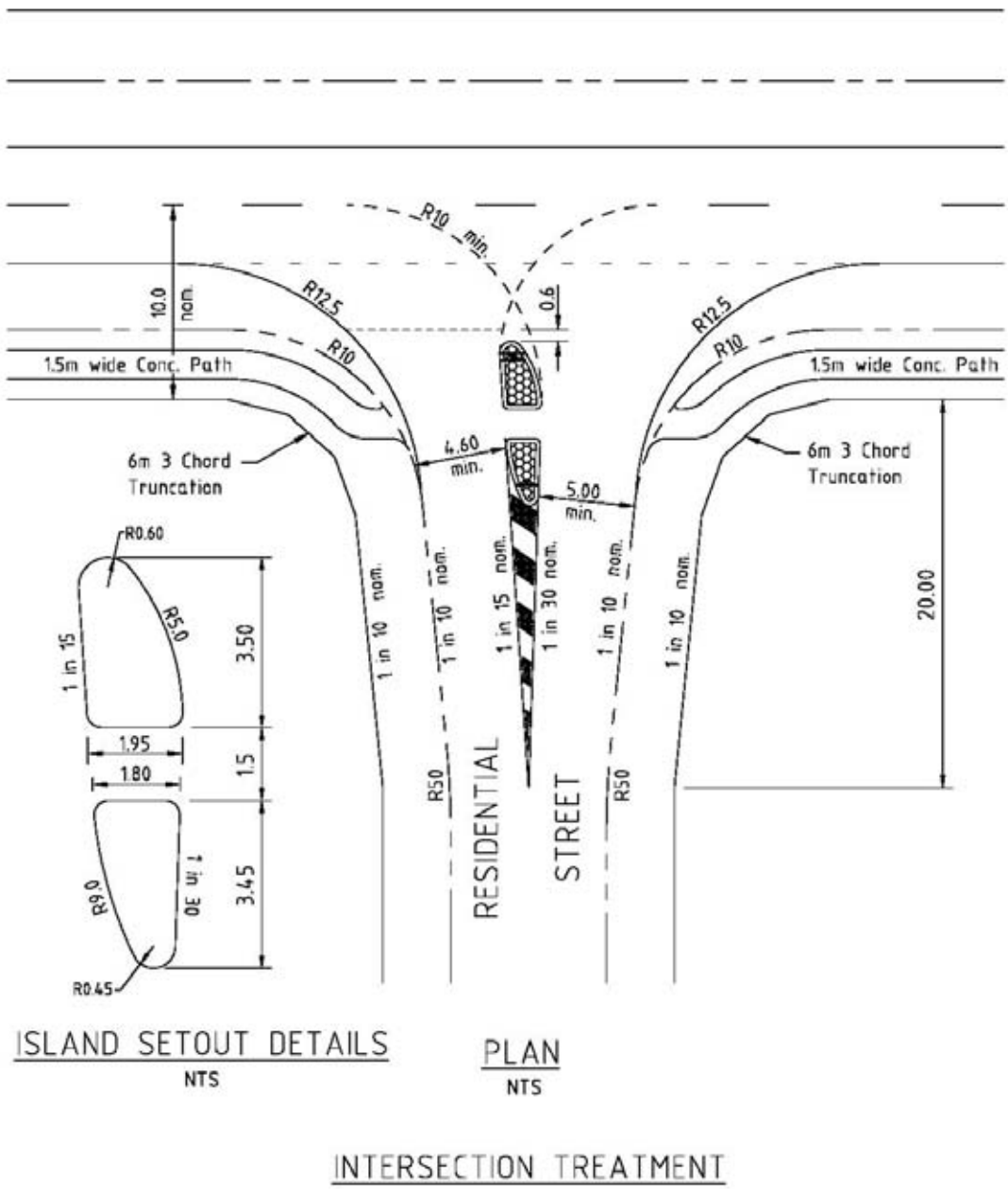

Diagram 3 - Typical Widening at Right Angle Bend

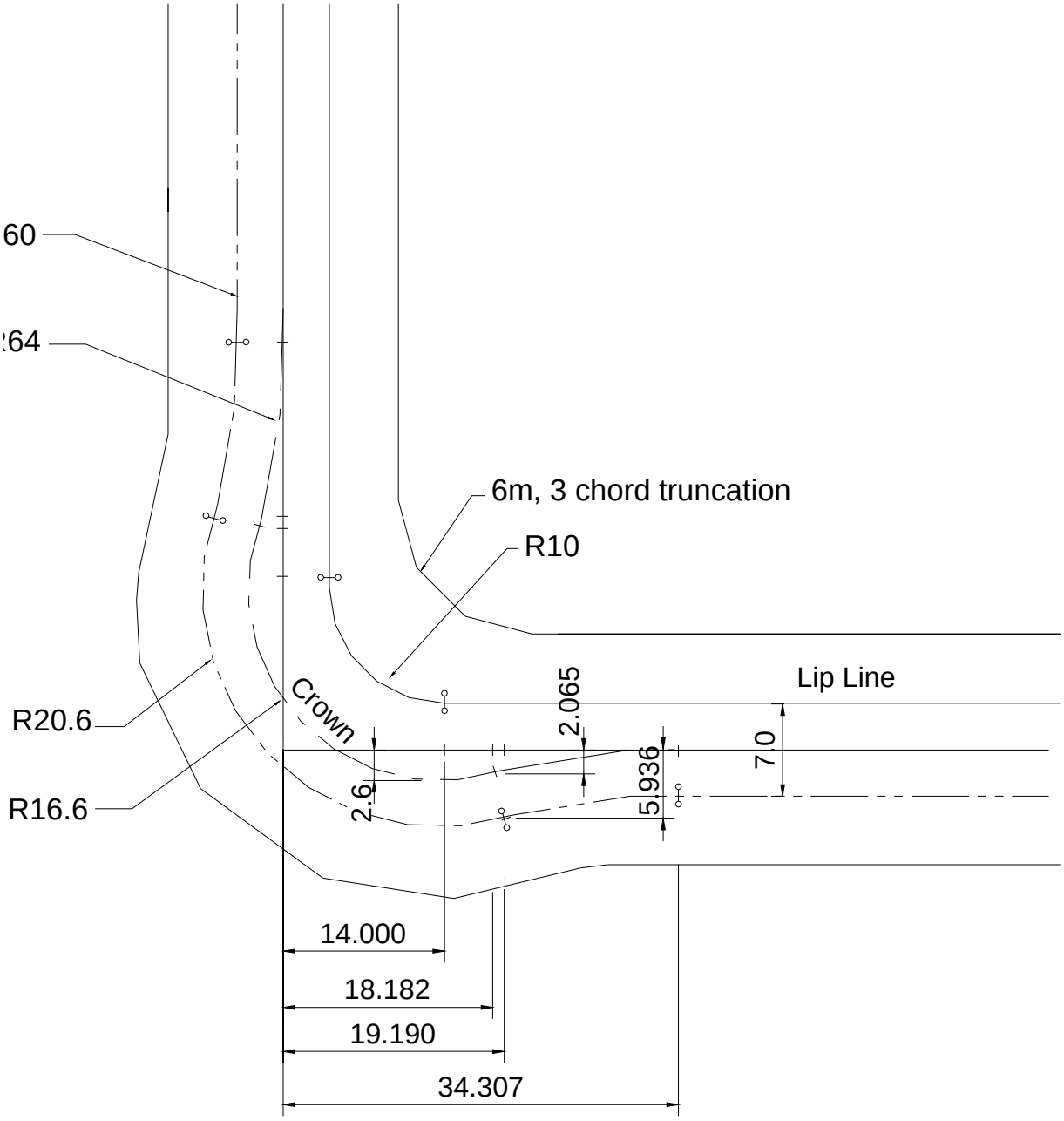

NOTES: 1. Property side boundaries to coincide with chords angles where practical.

ELBOW TREATMENT
ACCEPTABLE SOLUTION

NTS

Diagram 4 - Typical Residential Cul-De Sac Treatment

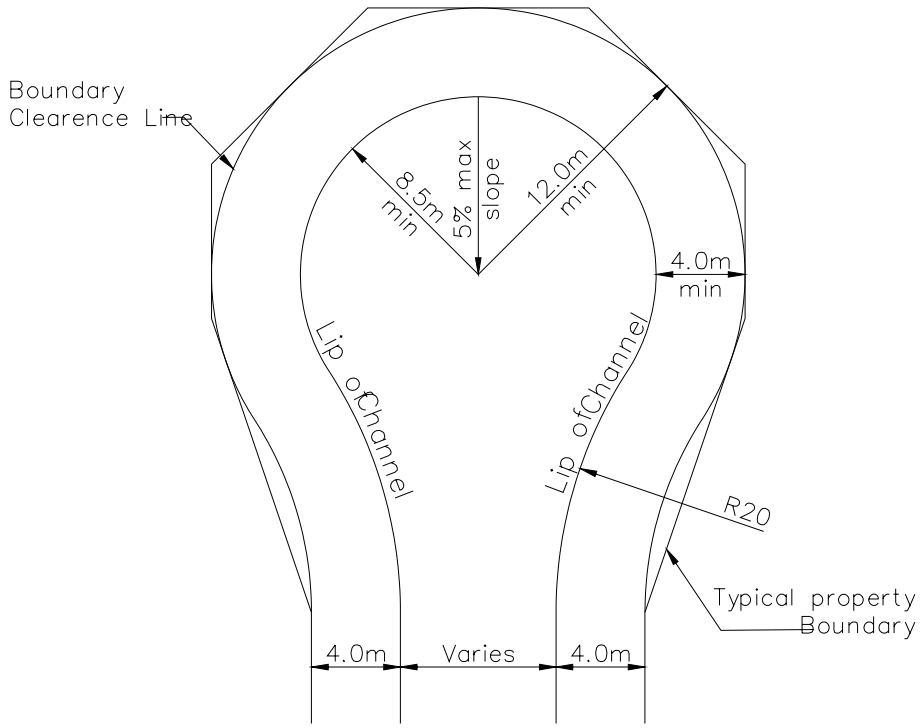

RESIDENTIAL CUL-DE-SAC TREATMENT

Refer also to examples shown in Figures 2.12B; 2.12J and 2.12H(b) on pages 60, 60D and 60E of "Queensland Streets"

Diagram 5 - Typical Dead End Manoeuvring Area

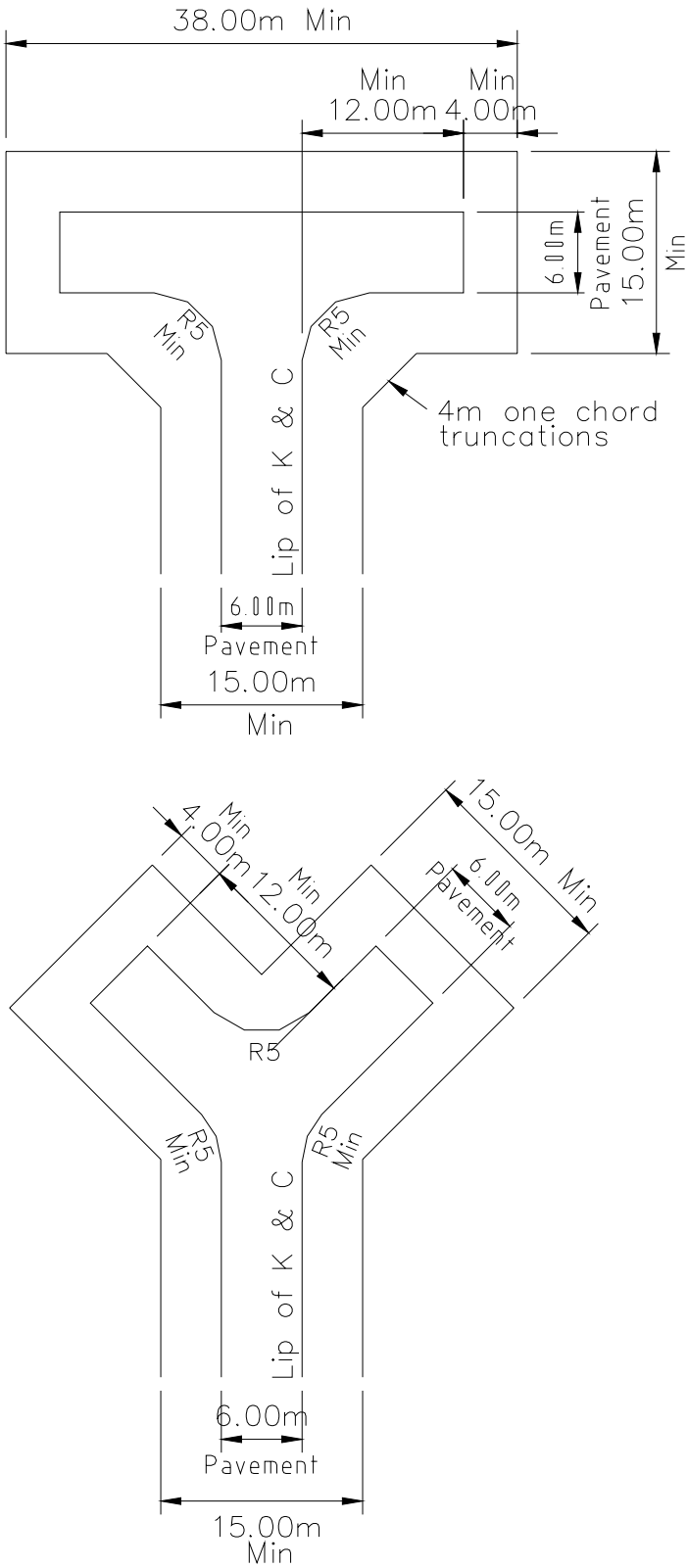

TYPICAL MANOEVERING AREAS
ACCEPTABLE SOLUTION

Diagram 6 - Typical Speed Control Treatment for Type A and B Streets

Signs linemarking and street lighting
to be installed to approved standards.

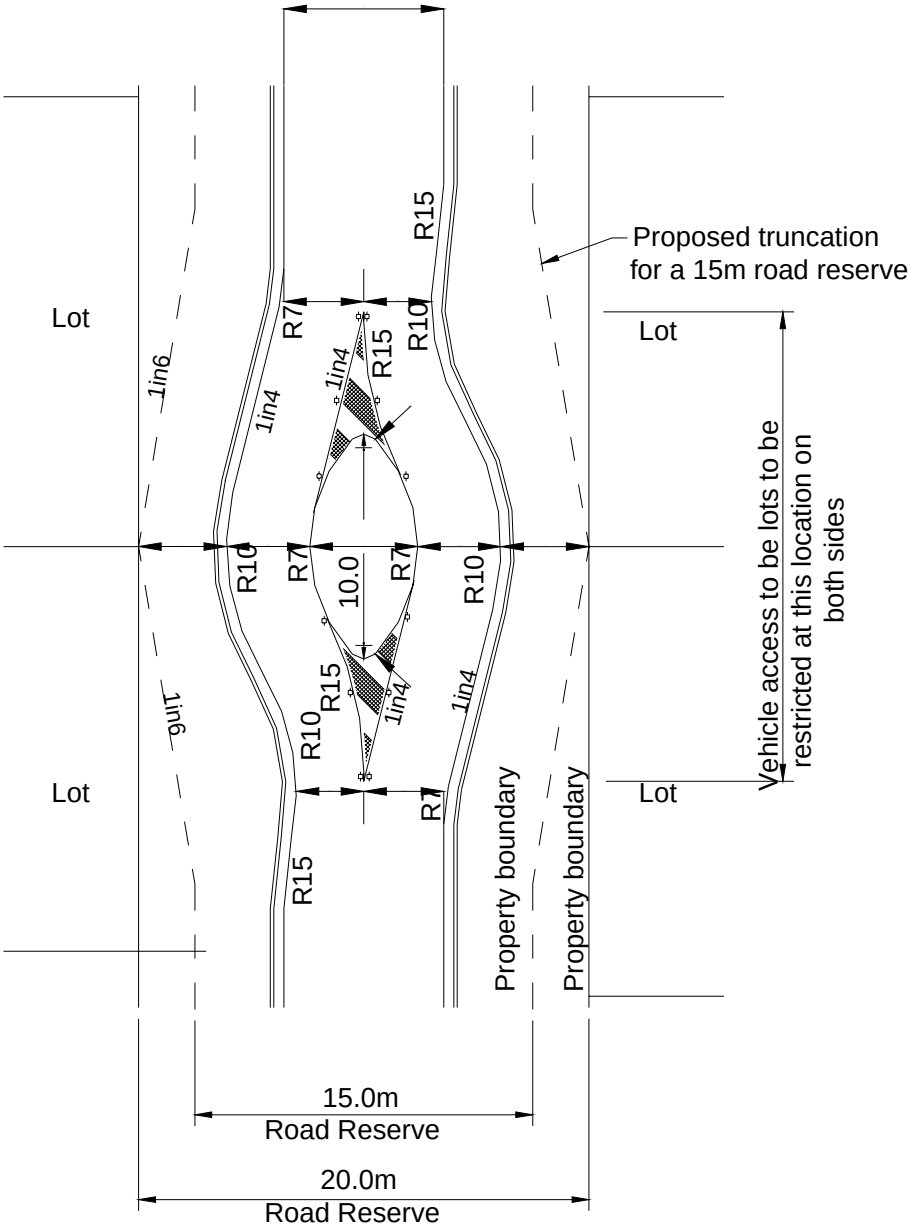

TYPICAL SPEED CONTROL DEVICE FOR TYPE A & B STREETS
GUIDE ONLY

Diagram 7 - Typical Treatment at Intersection for Pedestrian Safety

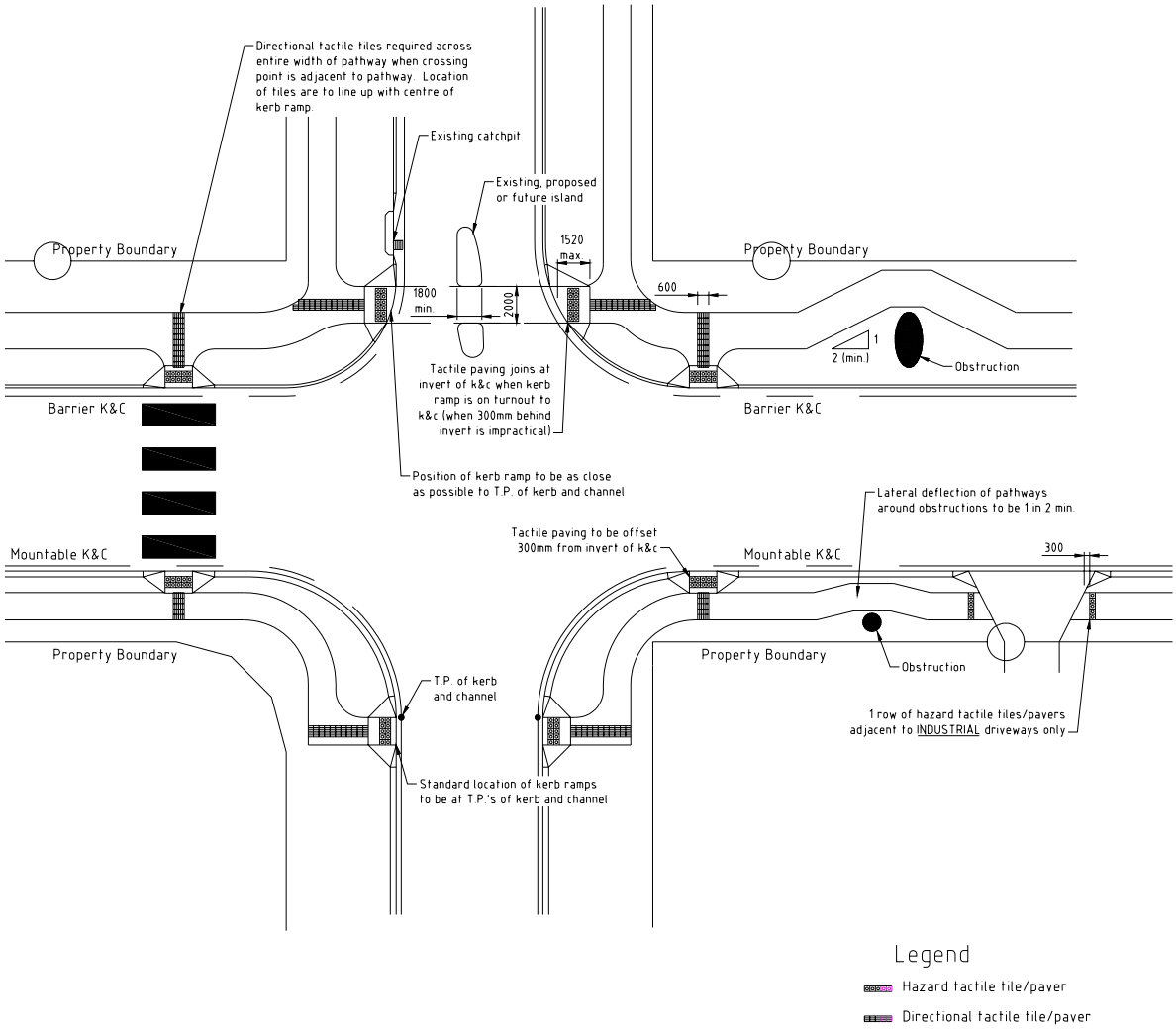

9.5.10 RoadInfrastructure

9.5.10.1 Kerb and Channel Location

Concrete kerb and channel is provided on both sides of all roads except where otherwise stated in the relevant development approval.

9.5.10.2 Kerb and Channel Types

(1) The types of kerbs and channels used in the local government area are in accordance with approved standard drawing R-RSC-6.

(2) The type of kerb and channel for Type A and B streets is Mountable Type M1.

(3) Barrier kerb and channel Type B1 with 450mm channel is used in the following cases -

(a) Trunk collector roads (Type C road);

(b) Industrial roads: heavy-duty barrier type is used with additional 50mm base thickness;

(c) Sub-arterial and arterial roads;

(d) Locations where high pedestrian volumes are likely, such as shopping centres, on the frontage of schools and major sporting facilities and parks: barrier type B1 kerb and channel is used for greater pedestrian safety. Heavy duty barrier type is used where required by the local government;

(e) Bridges and culverts.

9.5.10.3 Semi-Mountable Type Kerb

(1) Medians and traffic islands: semi mountable type kerb type SM4 and SM5 is used with a concrete median and landscaped median respectively.

(2) Roundabouts (centre island): a semi-mountable kerb type SM5 is used, except that 75mm high kerb may be adopted where the roundabout lies on a minor road which is unlikely to be a bus route.

9.5.10.4 Existing Kerb and Channel

Where proposed construction adjoins existing barrier kerb and channel, the local government will decide whether the existing profile is extended or tapered smoothly to the local government's standard mountable type kerb and channel.

9.5.10.5 Edge Restraints

Edge restraints, type RSC-1, are not permitted unless used in conjunction with a drainage swale or specifically approved by the local government.

9.5.10.6 Pram (Kerb) Ramps

(1) Pram (kerb) ramps are provided adjacent to all kerb returns, at park entrances and at any other location required by the local government. Refer approved standard drawings R-RSC-14 and R-0084.

(2) The Access Advisory Group assisting disabled persons has resolved that the requirement for pram ramps is considered in accordance with the following -

(a) Pram crossings in rollover kerb and channel at regular intervals at the design stage;

(b) Additional pram crossings at Tee intersections, in the direction across the through road, where the through road is a collector or of a higher standard;

(c) Pedestrian/wheelchair/pram refuge space in the middle of the road at some of the larger intersections.

9.5.10.7 Service Conduits

(1) Service conduits are provided under the pavement of all developmental roads and streets at locations shown on the approved standard drawings R-RSC-9, R-RSC-10 and R-RSC-13 unless directed otherwise by the local government.

(2) The type, class and laying of the service conduits is in accordance with the approved drawings from the relevant authorities and the local government's approved standard drawings.

(3) Relevant conduit markers, in the form of metal discs, are fixed into the kerb on each side of the road at the point the conduit passes under the kerb and channel. Refer to approved standard drawing R-RSC-13.

(4) The engineering design is to demonstrate there is sufficient width to locate services to rear lots. The local government requires the installation of service conduits along the access by the Developer. The conduits are constructed in accordance with the current relevant Australian Standards for the services provided.

9.5.10.8 Public Utility Services

(1) The standard allocation of the verge and roadway cross-section for the various services and utilities is in accordance with the local government's approved standard drawings R-RSC-9 and R-RSC-10 unless otherwise approved by the local government.

(2) Where ENERGEX and Communications share a joint use trench, conduits are located in accordance with the current policies of those service authorities.

9.5.10.9 Bridges and Culverts

(1) All bridges and culverts extend the full width of the carriageway plus the width of the verges as determined by the local government.

(2) Concrete footpaths are provided on both sides of bridges and culverts on all roads in developments.

(3) Bridges and culverts on a divided industrial, sub-arterial road or arterial road have a concrete footpath on the outer side of each bridge and culvert.

(4) Bridges and culverts on arterial roads have concrete footpaths as specified by the local government and/or the Department of Main Roads.

(5) Pedestrian concrete paths over bridges and culverts have a clear width of not less than 2 metres from the inside face of the handrail to the face of the kerb. A wider width may be required, if determined by the local government, to provide for service locations.

(6) Bridges and culverts with the deck at road level are surfaced with asphaltic concrete of minimum thickness 40mm.

(7) A bridge or culvert with the deck level below road level is paved and surfaced to the standards applying to the particular road type. The minimum requirement is 300mm of gravel pavement surfaced with asphaltic concrete.

(8) The design loading for each bridge is determined by the local government. All traffic loadings are based on Equivalent Standard Axles (ESAs, ie. equivalent 80kN axle load passes).

9.5.10.10 Pavement Surfacing

(1) Type A, B & C roads are surfaced with a minimum of 25mm Asphalt Concrete (AC). A chip seal, 7mm single coat bitumen seal, is provided under A.C. where a flexible pavement is used. The

nominal spray rate for the cut back bitumen is 0.9 litres* residual Class 170 bitumen per square metre and the 7mm aggregate spread rate is 1 cubic metre per 130 square metres.

(2) Industrial, commercial, sub arterial and arterial roads are surfaced with a minimum of 40 mm of Asphalt Concrete. A chip seal, 7mm single coat bitumen seal, is provided under AC where a flexible pavement is used.

(3) Flexible pavements at roundabouts and all cul-de-sac heads are surfaced with 40mm Asphalt Concrete (AC). A chip seal, 7mm single coat bitumen seal, is provided under AC where a flexible pavement is used.

(4) Asphalt Concrete conforms to Brisbane City Council's Specification (Type ll asphalt).

(5) The local government may approve the use of pavers in certain conditions.

(6) Rural roads are generally surfaced with a two coat hot bitumen seal to current local government requirements. The present requirements are as follows but may vary from time to time -

(a) Primer Seal Coat - cut back bitumen, 1.3 litres* residual Class 170 bitumen per square metre. Cover aggregate, 16mm, spreading rate, one cubic metre per 75 square metres;

(b) Seal Coat - cut back bitumen, 1.0 litres* residual Class 170 bitumen per square metre. Cover aggregate, 10mm, spreading rate, one cubic metre per 110 square metres.

Note -

- The actual rate chosen will depend on the following -
  - the A.L.D. of the stone;
  - the degree of penetration of the primer seal coat;
  - the accuracy achieved in the spreading of the aggregate.

(7) Reference should be made to the local government's approved specification for further details.

Note -

Except where varied otherwise in the planning scheme, road works conform to *AUS-SPEC, #1, Development Construction specifications*, Queensland.

(8) The local government may be contacted for approval of aggregate spreading rates and all bitumen spray rates.

9.5.11 PavementDesign

9.5.11.1 General

(1) Both flexible and bound pavements may be used. The total required pavement thickness is as follows -

(a) If Unbound Flexible Pavements where cumulative ESAs do not exceed 10^6 refer to *Australian Road Research Board Special Report No. 41; Into a New Age of Pavement Design;*

(b) *A Structural Design Guide for Flexible Residential Street Pavements* by P.T.Mullholland;

(c) If Unbound Flexible Pavements where cumulative ESAs exceed 10^6 refer to -
(i) Department of Main Roads *Pavement Design Manual*;
(ii) *AUSTROADS - Pavement Design; A Guide to the Structural Design of Road Pavement*;

(d) If Bound Pavements (All Traffic Loadings) refer to the Department of Main Roads *Pavement Design Manual*;

(e) If A.C. Surfacing, material design and construction is to Brisbane City Council standards; or

(f) If Rigid Pavements -
  (i) On Type A or Type B street, design is to the requirements of the Cement and Concrete Association Australia publications -
    a. *Concrete Street and Parking Area Pavement Design*;
    b. *Guide Specification for Construction of Concrete Street and Parking Area Pavements*;
    c. Such as cement concrete pavements for other than Type A and B streets, design is to the requirements of the AUSTROADS publication, *Pavement Design*: *A Guide to the Structural Design of Road Pavements.*

9.5.11.2 Subsurface Drainage

The design of subsurface drainage is based on *Australian Road Research Board Special Report No. 35; Subsurface Drainage of Road Structures*, by R.J. Gerke.

9.5.11.3 Material Testing

Testing of material is performed by a National Association of Testing Authorities (N.A.T.A) registered materials tester, using methods described by the Standards Association of Australia and/or Queensland Transport.

9.5.11.4 Design Procedures

(1) Procedures as outlined in the following publications are used for subgrade evaluation -

  (a) For design traffic up to 1 x 10 ^{6} ESAs, *Australian Road Research Board Special Report No. 41 Into a New Age of Pavement Design - A Structural Design Guide for Flexible Residential Street Pavements,* by P.T. Mullholland);

  (b) For design traffic more than 1 x 10 ^{6} ESAs, the Department of Main Roads *Pavement Design Manual;*

  (c) Alternatively, *AUSTROADS Pavement Design, Guide to the Structural Design of Road Pavements* may be used.

(2) Total pavement thickness is based on the values obtained from Soaked California Bearing Ratio tests, determined in accordance with the method in *Australian Standard AS1289 - Methods of testing soils for engineering purposes.*

(3) In cases where the 4 day soaked CBR value is less than 3 percent, 50mm of material having a 4 day soaked CBR of 15 percent is added to the design depth of pavement for each 0.5 percent or part thereof the CBR is below 3 percent. For example, if the CBR is 2.5 percent, add 50mm; if it is 2 percent, add 100mm. As an alternative, approved subgrade stabilisation or subgrade replacement procedures may be carried out when subgrade CBR is less than 3 percent.

9.5.11.5 Determination of Design Traffic

Design Traffic for the various road classifications is defined as indicated in Table 5.

Table 5 - Design Traffic

Road Description	Road Type	ESAs *
Access Places and Access Streets	A	5×10^{4}
Collector	B	1×10^{5}
Trunk Collector	C	1×10^{6}
Sub-Arterial		2×10^{6}
Industrial		$2 \times 10^{6\Delta}$
Arterial		DMR DESIGN STANDARDS

Notes -

Δ Refer *Queensland Streets* Traffic Generation Details

* Figures indicated are to be used as a guide only. The local government will determine the requirements for each individual situation.

9.5.11.6 Design Thicknesses

(1) Subgrade test results including a drawing showing the locations of tests and proposed pavement thicknesses are submitted to the local government for approval after basic site earthworks have been completed.

(2) Pavement depths are increased by an additional 100mm for 10 metres on either side of slow points, traffic calming devices, traffic islands adjacent to intersections, cul-de-sac heads and all intersections.

(3) The pavement thickness is subject to confirmation by the local government following a site inspection. Further testing of the subgrade may be required by the local government prior to placement of pavement material.

(4) The local government may require either local or general variation of the pavement thickness, dependent upon the actual subgrade conditions encountered.

(5) The minimum total thickness of pavement required is -

Table 6 - Minimum Total Pavement Thickness

Road Classification	Minimum Compacted Thickness in Millimetres					
	A.C.	Chip Seal	Base	Sub base	CBR15	Total
Type A,B and C	25mm	5mm*	125mm	125mm	N/A	280mm
Sub-Arterial	40mm	5mm*	125mm	125mm	N/A	295mm
Arterial	40mm	5mm*	125mm	125mm	N/A	295mm
Industrial	40mm	5mm*	125mm	125mm	N/A	295mm

Note -

* Assumed ALD for 7mm chip seal of 5mm.

- Roundabouts are to have a minimum 40mm AC surfacing with a Chip seal, 7mm single coat bitumen seal, under A.C where a flexible pavement is used.
- The total pavement thickness required is not to include the thickness of AC surfacing which is deemed to be a wearing surface only unless the AC thickness is greater than 75mm.
- Asphaltic concrete will be considered as a structural course when designed in accordance with Department of Main Roads standards.

9.5.11.7 Testing and Construction of Roads

(1) Site investigation is performed to determine soil types based on a series of test holes sampled along the job site. Testing should be at a sufficient interval so as to determine soil boundaries.

(2) The minimum testing distances are -

(a) for streets of less than 120 metres length: 2 test locations;

(b) for streets of over 120 metres length: Test location every 60 - 100 metres depending on soil types.

(3) Samples are taken in order of running chainages and extend 500mm below the proposed subgrade level. Where the depth of fill will exceed 500mm, testing of the subgrade is not required. However, testing of the fill is required.

(4) At each test location the testing is to include both field and laboratory testing -

(a) Field testing -
(i) Visual description of sample including the material type and colour. The Unified Soil Classification system can be used to satisfy this;
(ii) Dynamic Cone Penetrometer test to a depth of 1 metre;
(iii) Field moisture content;

(b) Laboratory testing -
(i) Gradings of the subgrade;
(ii) Linear shrinkage (LS);
(iii) Soaked CBR testing.

(5) Soaked CBR testing is undertaken once grading and plasticity test results have been obtained so that soil boundaries can be identified. In this way a sample representing a material type need only be tested.

(6) The design CBR is determined as follows -

(a) Where there are fewer than 5 CBR test results on the same material - Design CBR = the lowest 4-day soaked CBR value;

(b) Where there are more than 4 results on the same material -
(i) Design CBR = the 10th percentile of all 4 day results on the same material;
(ii) Design CBR = C - (1.3 x S).

Note -

- where C= the mean of all 4 day soaked CBR values;
- where S= standard deviation of all 4 day soaked CBR values.

(7) The above method is the same as that outlined in ARRB SR41 for F = 1.0. The method outlined in clause 2.2.3(b) of ARRB SR41 may also be used.

(8) The location of the boundaries of soil types may be identified by using dynamic cone penetrometer, soil grading, and linear shrinkage tests and correlating these to 4 day soaked CBR test results. That is, such boundaries need not be established with CBR tests.

(9) Dynamic Cone Penetrometer tests are carried out to a depth of 1metre.

(10) The location of the boundaries of soil types may be assisted by, but not be solely determined by -

(a) visual classification of the soil including its type and colour using the USC system;

(b) field moisture content.

(11) Pavement design is based on 4 day soaked CBR values of the subgrade material.

(12) Design traffic figures for various categories of roads are defined in this chapter of the policy. Refer to Table 5 - Design Traffic.

(13) Some roads do not meet these criteria, and design traffic figures may be obtained from the local government.

(14) For the purpose of this design, two design charts have been adopted -

(a) for design traffic up to 1×10^6 ESAs, refer to *Figure 7 ARRB Special report number 41*;

(b) for design traffic greater than 1×10^6 ESAs, refer to Department of Main Roads - *Pavement Design Manual*.

(15) Thickness design of asphalt pavements is based on Department of Main Roads design charts.

(16) Asphalt complying with Brisbane City Council's specification for Type II mix is recommended with a depth as specified in this policy.

(17) Interlocking 80mm thick clay pavers may be used provided they are laid on a 175mm thick layer of mass concrete.

(18) Skid resistance of paved surfaces is not to exceed the values recommended by the Department of Main Roads.

(19) Pavement materials are in accordance with applicable design manuals for unbound materials.

(20) Approval is sought from the local government where bound material is proposed to be used.

(21) The paving material is to meet grading and plasticity requirements as set out in the Department of Main Roads specification. The strength of the material is assessed by the Soaked California Bearing Ratio Test. Sufficient testing of supplied pavement material is undertaken to ensure that the material meets grading, plasticity and strength requirements.

(22) A quality assurance program for testing is adopted and the pavement tested on a lot to lot basis.

(23) A pavement layer is not covered with the next layer or wearing course until the moisture level is less than the Optimum Moisture Content.

(24) A general construction specification is required to accompany all engineering documents. The local government's approved construction specifications are AUS-SPEC # 1 except for the following specifications which conform to the Queensland Department of Main Roads -

(a) flexible pavements;

(b) sprayed bituminous surfacing;

(c) asphaltic concrete;

(d) bituminous microsurfacing;

(e) signposting.

(25) Regardless of the above specifications, the local government's requirements as modified in this Policy take precedence.

(26) The job specification is to contain requirements for construction tolerances, an example of which is indicated in Table 7 - Tolerance Requirements, as being indicative of a standard acceptable to the local government.

Table 7 - Tolerance Requirements

Course	Design Level Tolerance	Thickness Tolerance	Sharp Tolerance	Crossfall Tolerance
General Earthworks	+ 0 mm - 100 mm	N/A	N/A	As directed
Subgrade	+10 mm - 15 mm	N/A	N/A	As directed
Sub-base	+ 10 mm - 10 mm	+ 40 mm - 20 mm	25 mm in 3 metre maximum	± 1.0 percent
Base	+ 15 mm - 10 mm	+ 15 mm - 15 mm	15 mm in 3 metre maximum	± 1.0 percent
Surfacing	+ 10 mm - 5 mm	+ 15 mm - 0 mm	7 mm in 3 metre maximum	± 0.5 percent
CBR 15 Material	+ 10 mm - 15 mm	+ 40 mm - 20 mm	25 mm in 3 metre maximum	± 1.0 percent

(27) The job specification is to include testing requirements for developments which include lot fill, roads and trenches. An example is given in Table 8 - Testing Requirements, as being indicative of a standard acceptable to the local government.

Table 8 - Testing Requirements

Parameter	Description	Standard of compaction	Testing Interval
Compaction	Lot fill	95 percent Std	1 Test per lot per layer
	Trenches	90 percent Mod or, 95 percent Std	80 metres length/ 300 mm thick
	Subgrade	Top 300mm 100 percent Std Below 300mm 95 percent Std	2 test per road 1 test per 100m
	Select fill	95 percent Mod	2 test per road 1 test per 100m
	Sub base	95 percent Mod	2 test per road 1 test per 100m
	Base	98 percent Mod	2 test per road 1 test per 100m
Investigation	Subgrade CBR (Compulsory)		One per soil type
	Grading Linear, Shrinkage and Dynamic Cone Penetration (Additional optional testing to support CBR's)		Enough to identify soil boundaries.
Quality	Gravel	Grading, Shrinkage and P.I.	1 test per 400 metres min 2 per development
	CBR	CBR to be tested at minimum requirement for compaction (See above)	1 test per 400 metres or 1 test per 2000 metres with test results from source

(28) The job specification may include proposed layer thicknesses. An example is given in Table 9 which is indicative of a standard acceptable to the local government.

Table 9 - Layer Thicknesses

Course	Minimum Thickness (mm)	Maximum Thickness (mm)
Subgrade (CBR 15 material)	100	150
Sub-base	100	150
Base	100	150
Surfacing (AC)	25	N/A
Surfacing (concrete)	150	N/A

Note -

Maximum particle size of base, sub-base and grade courses for the minimum thickness is 40mm. Materials used comply with the Queensland Department of Main Roads standard specifications which may over-ride the above minimum thickness requirements.

(29) All lot fill testing is carried out in accordance with the requirements of *AS 3798: 1996 - Guidelines on Earthworks for Commercial and Residential Developments*. The level of control is to the approval of the local government's representative. Tolerances on level are to ensure that the finished grade is within 0.5 percent of the design grade and that the resultant profile achieves its design functions.

(30) Prior to acceptance of the works On-Maintenance, a comprehensive report of all testing carried out during construction is submitted for the local government's records.

9.5.11.8 Sub-Soil Drainage

(1) Sub-soil drainage is installed at all locations, in all subgrade materials other than sand. The invert level is above tidal influence which is RL 1.6 AHD.

(2) The design of subsurface drainage complies with the criteria in *ARRB Special Report No. 35 Subsurface Drainage of Road Structures* by R.J. Gerke.

(3) Details and locations of subsoil drainage is in accordance with the local government's approved standard drawing R-RSC-12 unless otherwise directed by the local government.

9.5.12 Un-Signalised and Signalised Intersections

Note -

Road reserve widths, truncations and carriageway configuration are subject to the local government road planning layout requirements.

9.5.12.1 Truncations

(1) The minimum truncation of the real property boundary, at an intersection, is outlined in Table 10.

Table 10 - Intersection Truncations

Road Classification	Truncation Required
Type A, B, C and D roads to any road. Distance criterion to achieve giveway conditions specified in the *MUTCD*	Based on sight. Minimum 6 metres by 3 chord
Industrial	8 metres by 3 chord Refer to *Queensland Streets*
Sub Arterial to any road	10 metres by 3 chord
Arterial Road to Arterial Road	25 metres by 5 chord

(2) Where the intersection angle is other than 90°, the truncation is by chords to a circle of radius equal to the above truncation lengths.

(3) In all cases, the minimum truncation depends upon maintaining the minimum width of verge for each type of road as shown on approved standard drawing R-RSC-15. Sight distance is to the satisfaction of the local government and the Department of Main Roads where appropriate.

9.5.12.2 Channelisation

(1) Warrants for the provision of channelisation at intersections is traffic volumes and intersection layout, and the local government will determine at which intersections channelisation is required.

(2) It is not possible to set out standards which are applicable to all situations. Therefore, when channelisation is required, refer to the current Department of Main Roads Design Manuals and *AUSTROADS* publications.

(3) All channelisation, except for slow points and minor roundabouts on residential type A and B streets, are designed to accommodate a Design Semi-trailer, providing a clearance of not less than the requirements as specified in AUSTROADS.

(4) Intersections, slow points and minor roundabouts on residential type A and B streets are designed to accommodate a standard 10.2 metre long garbage truck with a minimum of 0.3 metre clearance from the overhang of the vehicle to the kerb and channel lip or kerb lip as applicable.

(5) The minimum radius for the standard garbage truck is 11 metres to the outside front wheel path.

(6) Traffic islands are preferably delineated by raised kerbs. Other physical barriers or pavement marking may be appropriate in certain circumstances.

(7) Traffic islands may be classified as -

(a) Channelising or directional islands;

(b) Roundabouts;

(c) Median islands;

(d) Medians;

(e) Separators; or
(f) Pedestrian refuge islands.

(8) For details on islands and their classification, refer to the *Manual of Uniform Traffic Control Devices* (Qld) and relevant *AUSTROADS* publications.

(9) All traffic islands are constructed with concrete semi-mountable type kerb.

(10) All islands less than 12 m^2 or of a width less than 2 metres between kerb faces are constructed of full depth concrete with F62 mesh reinforcement placed centrally. The surface treatment is as specified by the local government; either coloured, patterned or stamped concrete. Approved plastic sheeting is placed under all concrete surfacing.

(11) The surface treatment of all other islands is full depth topsoil with turf or low planting. The local government may approve of landscaping in large islands.

(12) A water service is installed every 80 metres approximately, with a minimum of 1 service per median.

(13) Tree planting in median islands conforms to the *Road Landscaping Manual* published by the Qld. Department of Main Roads. Refer to figure C5-4 of the manual for clearance zone widths.

(14) Where the fall across an island is greater than 1 in 4, the island is surfaced with concrete or other treatment approved by the local government.

(15) Subsoil drainage to the local government's standards may be required in traffic islands where surface treatment other than concrete has been provided. The drainage is connected to an underground drainage system to the local government's requirements.

(16) All traffic islands are designed in accordance with the current Department of Main Roads Design Manuals and *AUSTROADS* publications. Particular attention is paid to commencing islands at horizontal curves and vertical curves with respect to sight distance.

9.5.12.3 Roundabouts

(1) Roundabouts may be proposed as a design solution but are subject to approval by the local government.

(2) The design is in accordance with current Department of Main Roads Design Manuals: *AUSTROAD*, *Part 6*, *Guide to Traffic Engineering Practice - Roundabouts* and the local government's standards.

(3) The maximum design speed through a roundabout is 50 km/h.

(4) The local government will determine the design criteria for the roundabout. This criteria includes the number of traffic lanes and radius of the centre island. Preliminary layouts are submitted to the local government for examination prior to final design.

(5) Notwithstanding the requirements of *Queensland Streets*, raised splitter islands are provided on all approaches to all roundabouts, unless otherwise approved by the local government.

(6) The minimum radii for centre islands are -

(a) Type A and B streets: 6 metres;

(b) Type C roads: 10 metres.

(7) Multi-lane roundabouts are in accordance with *AUSTROADS - Part 6, Roundabouts*.

(8) Centre islands of roundabouts are constructed to a similar standard as traffic islands except that concrete edging of 1.5 metres minimum width from the outer edge for the full circumference is provided.

(9) The centre section has a raised kerb and landscaping to the local government approved design. A certificate is submitted stating that the soil type provided is suitable for landscaping. A watering point is installed to roundabouts where directed by the local government.

(10) Roundabouts are designed and constructed to ensure that a forgiving environment is provided. Where appropriate, frangible poles and posts are used.

(11) An irrigation system may be required if specified by the local government.

(12) Subsoil drainage is provided for the full circumference of the roundabout and wherever else determined by the local government’s representative during construction and connected directly to an underground stormwater drainage system.

(13) Roundabout carriageways are surfaced with 40mm minimum depth of asphaltic concrete surfacing; or with concrete designed as specified in this policy; or with other approval materials. Bituminous surfacing chip seals are not permitted on roundabout carriageways under any circumstances.

(14) AC or concrete surfacing as specified herein is extended on the pavement to the greater of -

(a) 15 metres from the outside curve of the roundabout carriageway; or

(b) the point of the splitter island furthest away from the roundabout.

9.5.13 Clearing and Earthworks

9.5.13.1 General

(1) Road reserve clearing and earthworks construction is carried out in accordance with the specifications in *AUS-SPEC # 1, Development Construction,* except as amended in this policy.

(2) Clearing and earthworks on roads controlled by the Department of Main Roads conforms to that department's specifications.

(3) Refer to Chapter 12 - Excavation and Fill of this policy, for the standard required for lot clearing and earthworks. Refer also *AS3798: 1990 - Guidelines on Earthworks for Commercial and Residential Developments*.

(4) The use of heavy vibrating compaction equipment is restricted to locations where the possibility of structural damage to adjacent buildings is negligible. Approval for their use is applied for from the local government.

(5) No trees are destroyed or removed within the areas that are dedicated to the local government or within approximately 10 metres of the rear boundaries of all proposed lots except where approved for the location of services.

(6) Trees on existing roads are not damaged nor removed without the approval of the local government. All trees on existing roads affected by the works are shown on the plan and details of methods for protection and/or relocation of the trees are submitted for local government approval.

(7) All felled timber on the site is removed from fill areas before the earthworks are commenced. The local government is notified when this work has been completed.

(8) Excess material excavated from existing road reserves remains the property of the local government. When requested, it may be possible to re-assign ownership for a consideration when the material is required for filling of the subject land to design levels. Spoil is deposited on local government land if required, within 5km of the job site. The actual land will be nominated by the local government.

9.5.13.2 Disturbed Areas

(1) All disturbed areas within a development are topsoiled with 75mm minimum approved topsoil and grassed. Areas subject to erosion may require special treatment as directed by the local government or as specified in this policy.

(2) Works will not be taken Off-Maintenance unless 80 percent grass coverage is achieved in each 10 square metres of areas requiring grassing.

9.5.13.3 Treatment of Dams

All dams are dewatered, all silt removed and the dam wall leveled to existing ground level before approved filling commences. Certificates are provided to confirm that compaction at positions and levels requested by the local government have been satisfactorily completed.

9.5.14 Pedestrian and Bicycle Paths

9.5.14.1 General

(1) Pedestrian paths are designed in accordance with *AUSTROADS Part 13* except as amended herein.

(2) Bicycle paths are designed in accordance with *AUSTROADS Part 14*, *Queensland Streets - section 4.0* and the Department of Main Roads standards except as amended herein.

(3) All proposed development works are designed to cater for bicycle and pedestrian movements.

(4) The needs of cyclists and pedestrians are considered at the initial stage of the design of transport infrastructure.

(5) Pedestrian and bicycle paths are generally constructed in concrete and are in accordance with the local government's approved standard drawings R-RSC-5, R-RSC-8, P-RSC-2, P-RSC-4 and P-RSC-5 unless otherwise approved.

(6) Cross sections and a longitudinal section are submitted and conform to local government standards for each path.

(7) Pedestrian paths and bicycle paths are joined to the kerb and channel via a pram ramp when located on a road verge.

(8) The minimum width of land dedicated to the local government for the location of a path is 15 metres.

(9) Pedestrian and bicycle paths are constructed above the flow of a 50 percent AEP storm.

(10) The absolute minimum level of a concrete or sealed pedestrian or bicycle path is RL 2.0 AHD.

9.5.14.2 Key Design References

Refer to the following design references in Table 11 for local government design standards.

Table 11 - Reference to AUSTROADS Part 14 Design Standards

Design Consideration	AUSTROADS Part 14 Reference
Horizontal Curvature	Section 6.3.2
Clearances	Section 6.3.5
Gradients	Section 6.3.6
Sight Distances	Section 6.3.7
Superelevation, crossfall and drainage	Section 6.3.8
Surface tolerances	Section 8.5.1
Pavements materials and construction	Section 8.5.2

9.5.14.3 Path Requirements

(1) The cross-section of the verge conforms to the details in approved standard drawing R-RSC-8 except where otherwise approved by the local government.

(2) Unless otherwise required by the conditions of approval, path paving is provided on both sides of all collector streets and trunk collector streets except those in Park Residential developments. Refer standard drawing R-RSC-15 for more details.

(3) Depending on the location and function, path paving widths are provided to local government requirements. Pedestrian paths are designed to provide sufficient space for pedestrians with prams or strollers. Pedestrian paths are not less than 1.5 metres in width and should exceed that minimum where pedestrian demand is high in locations such as at commercial sites. At such locations the local government may require the paving to extend the full width of the verge, from the property alignment to the kerb. Refer to standard drawings R-RSC-5 and R-RSC-8.

(4) A shared bicycle/pedestrian path to commuter path standards as defined in *AUSTROADS Part 14, section 6.6.1* with links to local roads and or cycle routes is required along arterial, sub arterial and trunk collector roads. Refer standard drawing R-RSC-15.

(5) Consideration is given to anticipated future demand. The width of shared paths is in accordance with standard drawing R-RSC-5.

(6) The possible need to separate path users over part or all of the route will be determined where there is anticipated significant conflict between cyclists and pedestrians. Path separation is carried out in accordance with *AUSTROADS Part 14, Section 6.6.2*.

(7) Exclusive bicycle paths are installed where there is significant cycling demand and conflict with pedestrians is deemed to be high. Refer *AUSTROADS Part 14, section 6.7 and 6.*8.

9.5.14.4 Pathway Infrastructure

(1) Lighting is provided along paths to local government requirements to ensure visibility, safety and security. Lighting conforms to the Infrastructure Works Code, Chapter 9 - Electrical Reticulation and Street Lighting of this policy and *AUSTROADS Part 14, Section 6.9*.

(2) Devices such as fencing and bollards may be used to discourage motor vehicles on shared paths. The placement of fences, poles and bollards within the path width should minimise disruption to cyclists and pedestrians and not pose a safety hazard. Warning of the location of such devices in paths is in accordance with *AUSTROADS Part 14, Section 6.7.3*. Raised pavement markings are not used. Removable bollards are designed and installed to leave the path safe with nothing protruding above path level when the bollard is removed or lowered.

(3) Grab rails or holding rails are installed on shared paths near road crossings as per local government requirements and in accordance with *AUSTROADS Part 14, Section 6.7.3*. Galvanised rails are painted either white or yellow in conjunction with 3 bands of retroreflective tape as per *Australian Standard 1906.1: 1993 - Retroreflective materials and devices for road traffic control purposes-Retroreflective materials.*

(4) Bollards, fencing and grab rails positioned near path entrances are fitted with retroreflective devices or tape to increase visibility.

(5) Offset Chicane, standard drawing P-RSC-5 and Reverse Curve, standard drawing P-RSC-4 design treatments are used for bike paths and shared paths rather than centre bollards.

(6) Z Chicane rails are not used as a slowdown control devices in new developments.

(7) Kerb ramps and ramps for driveway crossovers are flush with the road pavement and do not have a lip at the invert in accordance with standard drawings R-RSC-14, R-RSC-2, R-RSC-3 and R-RSC-4. They are designed and installed in accordance with *Australian Standard 1428: 2003 - Design for Access and Mobility.*

(8) Kerb ramps used for transitions between off-road paths and on-road facilities at higher transition speeds should be in accordance with *AUSTROADS Part 14, Section 4.5.3*.

(9) Bicycle detection systems are provided in road pavement bicycle lane approaches to all new signalised intersections.

(10) Traffic control signs and pavement markings, including bicycle pavement symbols, are in accordance with *AUSTROADS Part 14, Section 9 and MUTCD Part 9*.

(11) Guide signs are provided at locations where guidance for the continuity of the cycle route is considered necessary in accordance with local government and the Department of Main Roads requirements. Refer *AUSTROADS Part 14, Section 9.4*.

(12) No Through Road signs on dead end streets which lead to bicycle paths include warning signs and line marking treatments that are not included in the *MUTCD* are specified in accordance with local government requirements.

(13) Reflectorised raised pavement markers are not placed inside a bicycle lane. They are installed on the motorist's side of the line marking with a bevelled front edge.

(14) Coloured bicycle lanes are installed at sections of bicycle lanes which are frequently crossed by motor vehicles and where safety is a concern particularly at left turn slip lanes. This is done in order to -

(a) reduce the chance of conflict between motor vehicles and cyclists;

(b) enhance the visibility and recognition of bicycle lanes;

(c) improve cyclists safety in high conflict areas;

(d) increase the skid resistance of the pavement in a critical area for cyclists.

(15) Green is the colour recognised for use in bicycle lanes and matches standard green colours in accordance with *Australian Standard 2700: 1996 - Colour standards for general purposes*, G13 Emerald, G27 Homebush Green, or approximate match of colour determined in accordance with *AS/NZ1580.601.1: 1995 - Paints and related materials-Methods of test-Colour-Visual comparison.*

(16) The surface treatment will be assessed for skid resistant requirements typically applied to all classes of roads at roundabouts, signalised intersections and approaches to hazardous locations.

9.5.14.5 Road Pavement Cycling Requirements

(1) Bicycle paths on new roads are designed and constructed in accordance with the desirable standards within *AUSTROADS Part 14*, *MUTCD Part 9* and *Queensland Streets*.

(2) Sealed shoulders intended for bicycle lanes are continuous through intersections.

(3) A combination of on-road cycling treatment is utilised to provide safe and continuous movement of cyclists along a roadway such as -

(a) sealed shoulders;

(b) wide kerbside lane;
(c) exclusive or peak period bicycle lane;

(d) advisory treatments such as Bicycle Awareness Zone;

(e) shared parking / bicycle lane;

(f) contra flow bicycle lane;

(g) bus/bicycle lane

(4) The provision of bicycle lanes at intersections is in accordance with *AUSTROADS Part 14, section 5* and *MUTCD Part 9*. Consideration is given to the various movement patterns of cyclists and addresses the following movement stages -

(a) midblock;

(b) transition;

(c) approach;

(d) storage;

(e) through;

(f) departure.

(5) The requirement to provide on-road cycling facilities may require -

(a) reduction in width of traffic lanes;

(b) sealing of road shoulders;

(c) indent of car parking;

(d) prohibition of car parking;

(e) widening of road at median;

(f) widening of road at verge;

(g) removal of traffic lane;

(h) provision of a high standard off-road path.

Diagram 8 - Cyclist Movement Elements through an Intersection

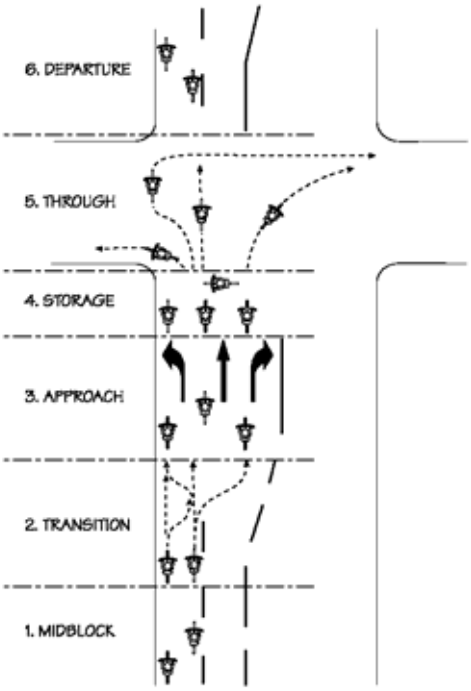

(Source: Cumming, 1999)

9.5.14.6 Roadworks Affecting Cycling Facilities

(1) Roadworks signs are not installed across shared paths, bicycle lanes or sealed shoulders which may be used by cyclists unless absolutely necessary and/or no other suitable location is available.

(2) All warning signs placed on bicycle and pedestrian facilities are clearly visible under all conditions. Adequate advance warning to oncoming cyclists and pedestrians are given when temporary signs block part or all of a path or other bicycle facility.

(3) Traffic management plans for roadworks clearly show the provisions for cyclists and pedestrians. Preference is given to minimising the length of detours to cyclists and pedestrians

9.5.14.7 Path Design Safety

(1) Initial planning and design provides access for wheelchair users, elderly people and pedestrians with prams or strollers.

(2) The grade on pedestrian paths, shared paths and exclusive bicycle paths are kept to a minimum but are not less than 0.4 percent. Grades greater than 8 percent are undesirable over an extended path length.

(3) A general guide on maximum grade lengths once they exceed 5 percent is detailed in Table 12.

Table 12 - Recommended Maximum Grade Lengths for Paths

Grade	Maximum Distance
5-6 percent	240 metres
7 percent	122 metres
8 percent	90 metres
9 percent	60 metres
10 percent	30 metres
11+ percent	15 metres

(Source: Adapted from VDOT 1990)

(4) Paths do not contain steps, stairways or other hazards or impediments which would prevent safe access by people with disabilities.

(5) The maximum longitudinal slope for disabled people is 1 in 20 with a cross slope not greater than 1 in 40. If a path has a greater longitudinal slope, it is considered a ramp and is to conform to requirements in *Australian Standard 1428.1: 2001- Design for access and mobility.*

(6) Bicycle and pedestrian paths in parks are designed to avoid close proximity to thick vegetation or large trees to minimise root damage and conform to clearances from vegetation and maintain adequate sight distance for cyclists. Refer *AUSTROADS Part 14, Sections 3, and 6.3.7*.

(7) The design and construction of Local Area Traffic Management (LATM) infrastructure such as speed humps, raised platforms, round-a-bouts and traffic islands in order to control access and speed is to cater for the safe movement of pedestrians and cyclists.

9.5.14.8 Bicycle Facilities at Roundabouts

(1) The provision of cycling facilities at roundabouts are generally in accordance with *AUSTROADS Part 14 Section 5.5.2*.

(2) The following design features are considered for each roundabout design. One or more of the following features are provided where appropriate -

(a) standard bicycle lane markings on approach and exit at roundabout;

(b) provision for cyclists to queue at approaches to roundabout;

(c) off ramps on entry and exit on each leg to allow for off-road movement for cyclists;

(d) a marked and coloured (green) carriageway bicycle lane extending across the approach and along the exiting bicycle lane;

(e) a marked bicycle lane continuing through the roundabout.

Note -

A sketch, similar to Diagram 9, is required to support the required treatment.

Diagram 9 - Bicycle Friendly Roundabout Treatment

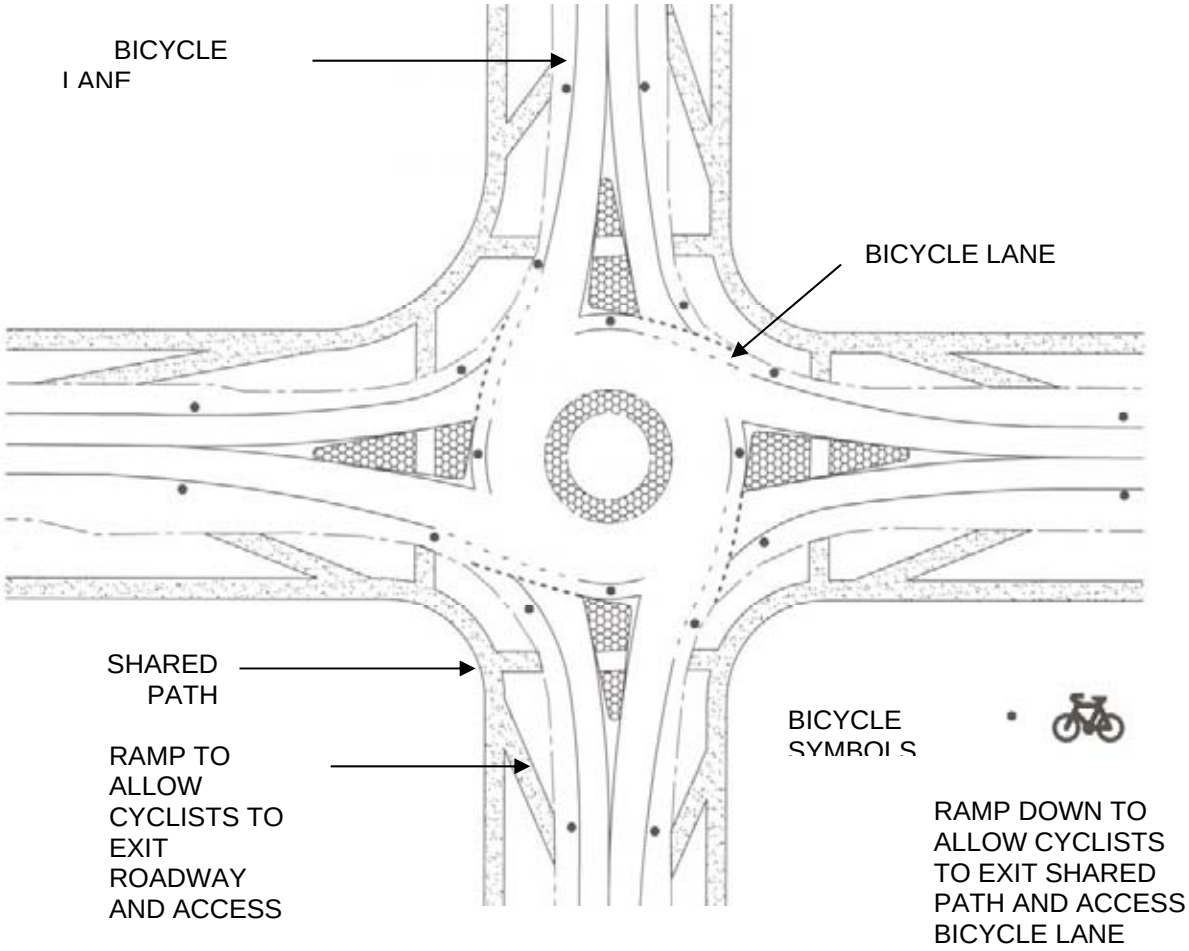

this page purposely
left blank

Chapter 6 - Stormwater Management

9.6.1 Purpose

(1) The purpose of this chapter of the policy is to -

(a) set out the requirements for the preparation and submission of plans and technical reports for the design of stormwater management systems associated with development applications under the planning scheme;
(b) ensure stormwater run-off does not adversely impact the quality of receiving waters, including waterways, wetlands, Moreton Bay and the marine environment;
(c) provide an efficient and effective stormwater management system that provides adequate protection for people and property from the effects of overland flow or flooding;
(d) maintain the natural flow regime of the site;
(e) identify the requirements for the implementation of Water Sensitive Urban Design (WSUD) Principles.

9.6.2 Applicabilit y

This chapter of the policy applies to all development sites under the planning scheme which are subject to stormwater run-off.

9.6.3 Legislat ive Framework

9.6.3.1 Context

(1) The local government's approved specifications for stormwater construction works conform to *AUS-SPEC # 1- Construction*, except as amended in this policy.

(2) The Stormwater Management Code and this chapter of the policy aim to ensure that development within the local government area is consistent with Ecologically Sustainable Development (ESD) and the requirements of -

(a) *Integrated Planning Act 1997;*

(b) *Environmental Protection Act 1994;*

(c) *Environmental Protection (Water) Policy 1997;*

(d) the local government *Corporate Plan;*

(e) *South East Queensland Regional Water Quality Management Strategy (SEQWRMS);*

(f) *Redland Shire Council Urban Stormwater Management Plan 2002.*

(3) The local government Urban Stormwater Management Plan (USMP) establishes the framework for the management of stormwater in a way consistent with ESD. This is achieved through the promotion of Water Sensitive Urban Design Principles.

(4) Water Sensitive Urban Design Principles essential to the USMP -

(a) minimise the contamination of waters by stormwater;

(b) maximise the infiltration of water into the ground;

(c) reduce the velocity of stormwater;

(d) remove contaminants from the stormwater.

(5) Measures to achieve these principles include -

(a) flow rate mitigation;

(b) erosion control;

(c) infiltration areas;

(d) grassed or vegetated drainage lines;

(e) vegetated waterway buffers;

(f) conservation or restoration of riparian vegetation;

(g) artificial wetlands;

(h) gross pollutant traps;

(i) retention basins;

(j) trash racks.

(6) Planning and design approaches for stormwater systems have regard to the needs of the local community. Approaches include -

(a) minimising ecological impacts on local waterways;

(b) acceptable health risks;

(c) aesthetics;

(d) protection from flooding;

(e) public safety and other social concerns;

(f) making use of stormwater for recycling and water conservation;

(g) making use of drainage corridors for improved recreational values and open space or landscape areas.

(7) Investigating opportunities to build contaminant control measures and re-establish riparian vegetation and aesthetically pleasing environments in drainage corridors.

(8) Integrating stormwater management planning with catchment-based planning and land use planning.

(9) Implementing viable alternatives to the release of stormwater through outlets across beaches or into waters with poor circulation.

(10) Ensure the design of the stormwater system maintains an acceptable level of maintenance.

(11) The Stormwater Management Code and policy provides a mechanism to implement commitments made in the local government Urban Stormwater Management Plan (USMP). The provisions contained within the code and policy reflects best practice methods of achieving these goals.

(12) Applicable guidelines include -

(a) *Urban Stormwater Best Practice Environmental Management Guidelines - CSIRO 1999*;

(b) *Stormwater Quality Control Guidelines for Local Government - Department of Natural Resources Mines and Energy and Department of Environment 1998*;

(c) *The Constructed Wetland Manual Volume 1 and 2 - Department of Land and Water Conservation NSW 1998*;

(d) *Natural Channel Design Guidelines - Brisbane City Council December 2000*;

(e) *Stormwater Outlets in Parks and Waterways - Brisbane City Council Version 2/2003*;

(f) *Australian Run-off Quality*.

9.6.3.2 WSUD Planning Process

(1) The design process is proposed to ensure WSUD is considered during the planning phase for the development site. Applications which do not demonstrate the integration of Stormwater Management into the planning of the development will not be accepted.

(2) Each step in the design process outlines the level of information required to satisfy the provisions of the Stormwater Management Code

(3) To meet the requirements of the code, the following design process is encouraged when preparing a stormwater management system.

Stage	Process	Explanation
Stage 1	Scoping Phase	Land Capability Assessment
Stage 2	Development of Stormwater Strategy	Conceptual Planning
Stage 3	Development of Detailed Stormwater Management Plan	Including details of temporary stormwater management measures and dam de-watering plan where necessary.
Stage 4	Prepare and Submit all Necessary Application Requirements.	

9.6.3.2.1 Stage 1 - Scoping Phase

Note -

The intent of Stage 1 in the design process is to identify and explain graphically the natural features of the area that need to be taken into consideration during the planning and design of the stormwater system. These areas include topography, drainage patterns, soils, geology, ground cover and sensitive regions, along with significant natural attributes such as wetlands, waterways, remnant vegetations and wildlife corridors - Draft Australian Runoff Quality, 2003.

Information obtained during the Scoping Phase should include but not be limited to the following -

(1) Aquatic Features

Provide maps, at an appropriate scale, showing, in plan view, the location of the following in relation to property boundaries and the proposed works -

(a) Waterways, Wetlands and Moreton Bay (WWMB) -
  (i) the location of WWMB as described by the Waterways, Wetlands and Moreton Bay Overlay;
  (ii) the required buffer distances from waterways, wetlands and Moreton Bay as described by the WWMB Overlay Code;
  (iii) or any tidal lands show the levels of highest astronomical tide (HAT), mean high water spring tide, low water spring tide and 1 percent AEP;
  (iv) determine the 1 percent AEP for all waterways identified on-site;

(b) Natural Drainage Lines -
  (i) the applicant identifies the 1 percent annual exceedance probability (AEP) flood level for all natural drainage lines (NDL's) identified on the Waterway, Wetlands and Moreton Bay Overlay;

(ii) the natural drainage flowpath areas identified as below the 1 percent AEP flood event level are preserved or enhanced in a natural state where the -
  a. development has an upstream catchment area of 5 hectares or more; or
  b. premises has an area of 2500m^2 or greater;

(iii) drainage flowpaths which intersect at an existing road sag and have an upstream area greater than 5 hectares, are retained for the full natural width of the 1 percent AEP flood level on the downstream side of the road in order to preserve the natural drainage lines;

(iv) roads may be constructed along natural drainage lines if the upstream catchment is less than 5 hectares in order to cater for the 1 percent AEP flood level event;

(v) the minimum width preserved for a natural drainage line is 15 metres;

Note -

The Waterways, Wetlands and Moreton Bay Overlay may not show all NDL's within the development site. It is the applicant's responsibility to identify all NDL's on-site.

(c) other aquatic features within or adjacent to the site including intermittent water features, dams, man made channels and other relevant features;

(2) Drainage Patterns and Soil Types -

(a) provide information relating to the topography of the site - the topography of the area will assist in determining the range of applicable stormwater treatment measures which can be incorporated into the planning of the development site;

(b) identify the soil types present and provide comments on their erodability and their potential for infiltration.

(3) Environmental Values and Water Quality objectives -

(a) identify the relevant environmental values and associated water quality objectives as per Schedule 11.

(4) Vegetation -

(a) identify graphically all on-site vegetation;

(b) identify the location of enhancement corridors and enhancement habitat as specified in the Habitat Protection Overlay.

(5) Open Space -

(a) identify the location of proposed open space.

9.6.3.2.2 Stage 2 - Development of a Stormwater Strategy

(1) Stage 2 in the design process involves the conceptual design of the stormwater management system using Water Sensitive Urban Design principles. Refer to section 9.6.3.1 - (3).

(2) The Stormwater Management Code and policy promotes the use of a treatment train approach when designing the stormwater system. A treatment train approach refers to the implementation of stormwater quality improvement measures in a series to maximise their performance. The treatment train consists of the following -

Source
⇓
Conveyance
⇓
Discharge
+
Natural Systems Planning

(3) This approach minimises stormwater pollution by in-transit measures and maximises the performance of individual components through correct placement in the treatment train. As depicted in Diagram 1, no single treatment measure is capable of treating the full spectrum of pollutants. Therefore it is essential to ensure that a number of treatments are used to meet water quality objectives.

Diagram 1

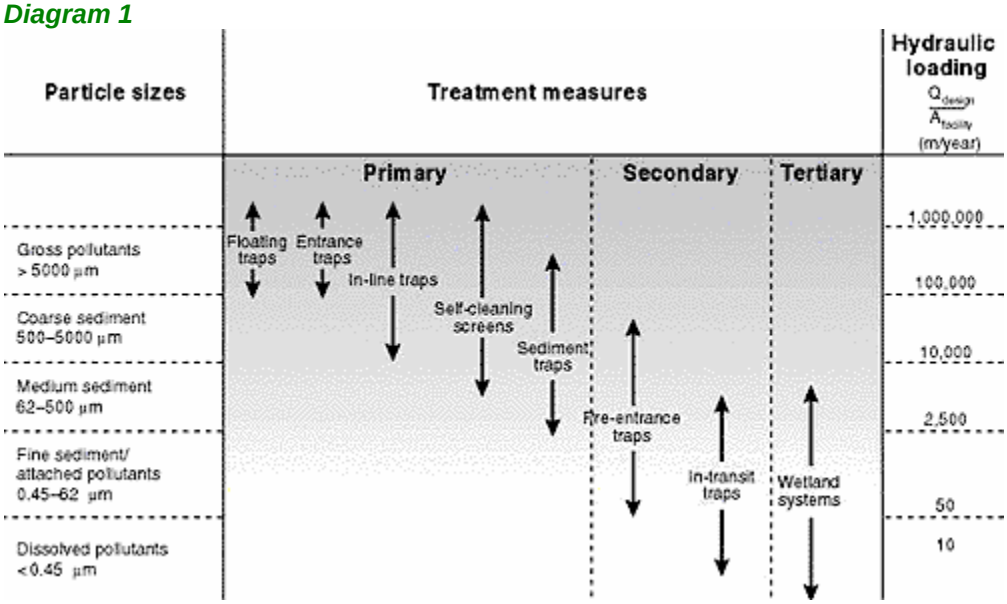

(4) The selection and implementation of structural treatment measures involves six steps -

(a) determine treatment objectives -
- (i) identify the relevant environmental values and associated water quality objectives for the area as per Schedule 11;
- (ii) establish the pollutants of concern in the catchment such as litter, sediments and nutrients;
- (iii) establish the level of treatment required to meet the water quality objectives;

(b) develop a treatment train -
- (i) assess the treatment process required to maximise the efficiency of each component of the stormwater treatment train;
- (ii) for example, remove coarse sediments and control flow prior to removal of nutrients;

Note -

When designing the treatment train, aspects of road design, public open space, landscaping and other criteria are considered.

(c) Site identification - identify potential sites and site constraints using information obtained during Stage 1 - Scoping Phase;

(d) Shortlist potential treatments and identify all applicable treatment measures, for example -
- (i) litter traps;
- (ii) swales;
- (iii) infiltration trenches;
- (iv) bio-retention systems;
- (v) wetlands;
- (vi) stormwater re-use;
- (vii) road designs landscape design;

(e) Compare potential treatments - compare all potential treatments for removal efficiency, maintenance requirements, social impacts and costs;

Note -

Refer Diagram 2 for example of stormwater treatment train.

Diagram 2 - Sketch Depicting Stormwater Treatment Train

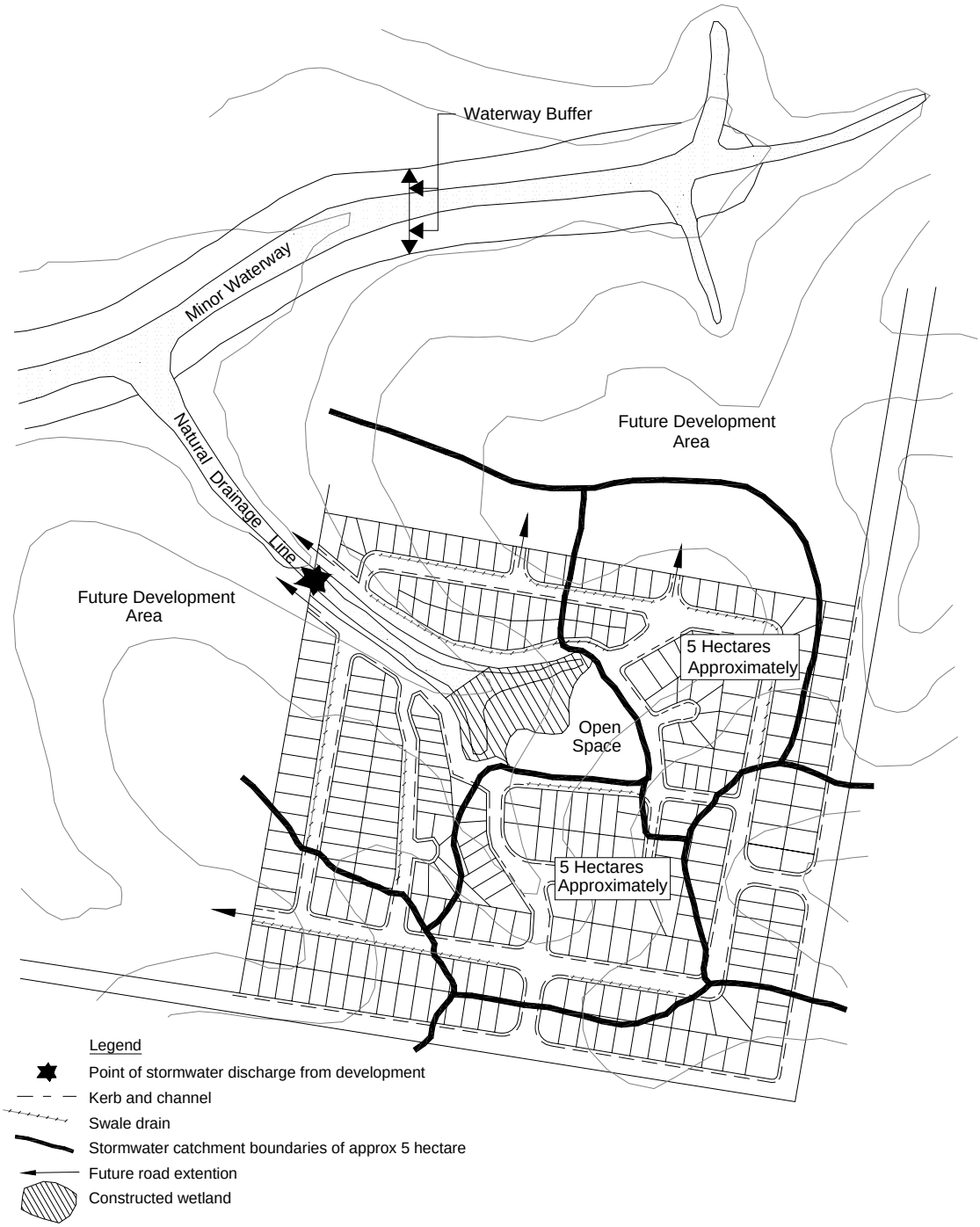

9.6.3.2.3 Stage 3 - Detailed Stormwater Management Plan

(1) Applicants undertake adequate hydraulic and hydrologic studies showing the measures undertaken to provide non-worsening of current stormwater discharge. This ensures that the quality, velocity and quantity of stormwater discharge post-development is not increased over the predevelopment state at the downstream discharge point.

(2) Refer Infrastructure Works Policy - Chapter 4 - Erosion Prevention and Sediment Control, for further details.

Note -

A maintenance lifecycle cost analysis is supplied with designs of stormwater treatment systems. Stormwater design is in accordance with the following standards.

9.6.4 Standards

9.6.4.1 Stormwater Management Systems

Stormwater management systems are designed in accordance with the requirements of the Queensland Urban Drainage Manual (QUDM), and Australian Rainfall and Runoff (ARR), except when it is otherwise specified in this chapter of the policy.

Note -

References in this chapter of the policy are to clause or table numbers in the QUDM unless stated otherwise.

9.6.4.2 Design Criteria

(1) Preliminary calculations for overland stormwater flow on roads and natural flow-paths are included when the application is submitted for the development layout inspection, in order to verify that the overland flow paths are adequate at all locations throughout the development. The initial preliminary calculations do not need to be precise.

(2) Design calculations similar to the format given in QUDM and in accordance with requirements of QUDM or ARR, as appropriate, are submitted with the development application for examination by the local government.

(3) Electronic data files that have been used to analyse the stormwater flows are supplied in electronic and hard copy format.

9.6.4.3 Calculation of Runoff

(1) Methods of stormwater run-off calculation or modeling are selected by considering the suitability of use of the particular method in accordance with QUDM and ARR requirements.

(2) The rational method is not acceptable for catchments which contain significant storage areas. Methods as described in QUDM and ARR are used for such catchments.

9.6.4.4 Intensities

(1) Rainfall intensities are calculated in accordance with procedures of ARR.

(2) The local government's Table 1 in this chapter may be used as a guide to determine rainfall intensities used in stormwater runoff calculations for storm durations.

9.6.4.5 Coefficient of Runoff

The local government's Table 2 in this chapter is recommended for use for the determination of coefficients of run-off. Refer QUDM Table 5.04.1 for fraction impervious values vs. development categories.

9.6.4.6 Time of Concentration

(1) QUDM Table 5.05.1 may be used for the calculation of inlet time for Urban Residential Zone and Medium Density Residential Zone lots but not for Low Density Residential Zone.

(2) A calculation in accordance with recommendations in QUDM and/or ARR is adopted for Park Residential Zone lots and larger upstream lots.

9.6.4.7 Design Frequency

(1) The major system design is 1 percent AEP (100 years ARI).

(2) The minor system design is in accordance with the local government planning scheme Stormwater Management Code, Table 1. Table 1 is generally in accordance with QUDM Table 5.06.1.

(3) In addition to Table 1 of the Stormwater Management Code, the following design frequencies apply -

(a) Pedestrian bridges over waterways, pedestrian paths and recreation equipment in active and passive recreation areas are above the 50 percent AEP. The underside of the bridge deck support is above the design water surface level;

(b) Floor levels of amenities buildings, which are not connected to the sewerage reticulation system in parks or recreation areas, are above the 10 percent AEP. Those connected to the sewerage reticulation system are above the 1 percent AEP;

(c) Open area sporting areas and playing fields are above the 100 percent AEP;

(d) Urban residential Level III inter-lot drainage is designed for a 50 percent AEP flood level.

(4) The drainage in a catchment that is receiving discharge from an area of a higher AEP is designed to cater for the greater design discharge from upstream. The AEP in the downstream catchment may be reduced to its normal recurrence interval at a convenient location such as a park area where the higher design flow can surcharge safely.

(5) The drainage in a catchment that is receiving discharge from an area of a lower AEP is designed to cater for a discharge from that upstream area at the same frequency as the downstream catchment. Sufficient inlet capacity is provided to cater for the additional design bypass flow from the upstream catchment where it meets a catchment of higher design recurrence interval.

(6) Design frequencies for drainage of the Department of Main Roads and Queensland Railways Infrastructure are in accordance with the current policies of the Department of Main Roads and Queensland Rail.

Table 1

Intensity Frequency Duration

Rainfall Intensity in mm/hr								
Duration	ANNUAL EXCEEDENCE PROBABILITY							
(Minutes)	100%	50%	20%	10%	5%	3.3%	2%	1%
5	121	154	190	210	238	254	275	302
6	114	144	178	197	224	239	258	284
7	107	136	168	186	212	226	244	269
8	102	130	160	177	201	215	232	256
9	97	124	153	169	192	206	222	245
10	93	118	146	162	184	197	213	235
11	89	114	141	156	177	190	205	226
12	86	110	136	150	171	183	198	218
13	83	106	131	145	165	177	191	211
14	80	102	127	141	160	171	185	204
15	78	99	123	136	155	166	180	198
16	76	96	119	133	151	161	174	192
17	74	94	116	129	147	157	170	187
18	72	91	113	126	143	153	165	182
19	70	89	110	122	139	149	161	178
20	68	87	108	119	136	145	157	174
21	66	85	105	117	133	142	154	170
22	65	83	103	114	130	139	150	166
23	64	81	100	112	127	136	147	163
24	62	79	98	109	124	133	144	159
25	61	78	96	107	122	131	141	156
26	60	76	95	105	120	128	139	153
27	59	75	93	103	117	126	136	150
28	57	73	91	101	115	123	134	148
29	56	72	89	99	113	121	131	145
30	55	71	88	98	111	119	129	143
31	54	69	86	96	110	117	127	140
32	54	68	85	95	108	115	125	138
33	53	67	84	93	106	114	123	136
34	52	66	82	92	104	112	121	134
35	51	65	81	90	103	110	119	132
36	50	64	80	89	101	109	118	130
37	49.6	63	79	88	100	107	116	128
38	48.8	62	78	86	99	106	114	126
39	48.2	61	77	85	97	104	113	125
40	47.5	61	76	84	96	103	111	123
41	46.9	60	75	83	95	101	110	121
42	46.3	59	74	82	93	100	108	120
43	45.7	58	73	81	92	99	107	118
44	45.1	57	72	80	91	98	106	117
45	44.5	57	71	79	90	97	105	116
46	44.0	56	70	78	89	95	103	114
47	43.5	55	69	77	88	94	102	113
48	43.0	55	68	76	87	93	101	112
49	42.5	54	68	75	86	92	100	111
50	42.0	54	67	75	85	91	99	109
51	41.5	53	66	74	84	90	98	108
52	41.1	52	65	73	83	89	97	107
53	40.6	52	65	72	82	88	96	106
54	40.2	51	64	72	82	87	95	105
55	39.8	51	63	1	1	87	94	104
56	39.4	50	63	70	80	86	93	103
57	39.0	49.8	62	69	79	85	92	102
58	38.6	49.3	62	69	78	84	91	101
59	38.2	48.8	61	68	78	83	90	100
60	37.9	48.3	60	67	77	83	89	99

Table 2

Fractions Impervious and Coefficients					
Description	**Fraction Impervious (includes roads) f**	**100% AEP C**	**50% AEP C**	**10% AEP C**	**1% AEP C**
Medium Density Residential Zone (including sub-area MDR 1)	0.80			0.85	1.00
Urban Residential Zone Fee Simple Lots. $300m^2$	0.80		0.72	0.85	1.00
$400m^2$	0.70		0.70	0.82	0.98
$500m^2$	0.60		0.68	0.80	0.96
(Urban Res.) $550m^2$	0.55		0.67	0.79	0.95
$600m^2$	0.50		0.66	0.78	0.94
$700m^2$	0.45		0.65	0.77	0.92
$800m^2$	0.40		0.65	0.76	0.91
$900m^2$	0.35		0.64	0.75	0.90
Low Density Res. $2000m^2$	0.30		0.62	0.73	0.88
Park Residential $6000m^2$	0.20		0.60	0.71	0.85
Parks & Open Space	0.00	0.53	0.56	066	0.79
Canal Estates	0.75			0.84	1.00
Central Business	1.00			0.90	1.00
Commercial	0.90			0.88	1.00
Industrial	0.90		0.75	0.88	1.00
Roads and car parking areas	0.90		0.75	0.88	1.00

9.6.5 Roof and Inter-lot Drainage

9.6.5.1 General

(1) Developers are to provide either Level I or II roof water drainage or Level III roof and surface inter-lot drainage to Urban Residential Zone developments. For multiple dwelling developments, community management statement, commercial and industrial developments, developers are to provide Level III or Level IV or Level V drainage. Applicability of such provisions is in accordance with the requirements of the Queensland Urban Drainage Manual (QUDM), except as specified herein.

(2) A rear of lot roof or inter-lot drainage system is provided to all lots where -

(a) The lot generally falls away from the frontage kerb and channel, such that a roof water drainage pipe cannot be connected to the frontage kerb and channel or the street drainage system;

(b) The finished surface level of the lot is less than 600mm at the middle of the lot above the lowest invert level along the frontage kerb and channel where no accessible street drainage system exists;

(c) New Urban Residential Zone lots are being created downstream of existing lots which have no drainage system. Surface water from existing lots and roof water down pipes from the existing dwellings are connected to the new drainage system at the developer's expense. If the developer were not able to obtain permission to enter the existing lots to carry out such work, the local government would assist the developer in obtaining such approvals;

(d) Urban Residential Zone developments in which proposed lots would naturally discharge run-off onto existing or possible future lower lots, or in which higher land would naturally concentrate runoff onto proposed lots.

(3) Private easements in favour of the upstream property owners are provided over Level III and V inter-lot drainage pipes. The easement width is to encompass the drainage infrastructure and will generally be a minimum width of 1.5 metres.

(4) Easements are not required over Level II roof water drainage lines where only two lots are connected.

(5) A minimum Level I standard of roof drainage is required in Park Residential Zones.

(6) Where roof drains connect to kerb and channel, the pipe across the verge may be uPVC class SN4 or equivalent placed on compacted sand bedding or, where applicable, galvanised steel rectangular hollow section of 100mm maximum height.

(7) Where more than one such RHS is required, each is placed not less than 25mm apart and welded together, using a steel spacer between the sections. The whole item is galvanised after fabrication.

(8) The pipe or RHS is connected to the kerb and channel via a kerb adaptor (KA), the end of which is to match the profile of the kerb and channel at the point where the kerb adaptor passes through the kerb.

(9) The kerb adaptor may be cast in at the time the kerb is constructed.

(10) The opening may be saw cut and reinstated with mortar after the kerb adaptor is installed - refer to standard drawing number R-RSC-7.

9.6.5.2 Urban Residential Roof Drainage

(1) As a minimum, provision is made for a Level I or Level II roof drainage connection for all Urban Residential Zone lots in new reconfigurations.

(2) A roof drainage system is provided for Urban Residential Zone lots, which are subject to run-off from higher lots. The standard is QUDM Level II. Roof drainage Level II may be used where no more than one line of higher lots contributes runoff to the lower lots before a street intervenes.

(3) Notwithstanding the detail in QUDM Figure 5.18.1(b), roof drainage is provided via a 150mm diameter pipe through a downhill lot with only one upper lot and the lower lot connected to the pipe and discharging to the lower street.

(4) Roofwater connection points provided to each upper lot are located 4 metre upstream from the lower side property boundary and 1 metre past the alignment of the sewer line.

(5) Notwithstanding the requirements of QUDM, the trunk drainage system is designed essentially without consideration of the Level I and Level II roof drainage system where only two lots are connected, except for the location of stormwater inlets and access chambers. Catchment boundaries remain unchanged.

(6) There will be no penalty in terms of increased head loss or flow on the street drainage system where the Level I or Level II, maximum 2 lots roof drainage system connects.

(7) One connection point is provided on the roof water drainage line for each property. This connection is in the form of an inspection opening Y junction (I0YJ) in each lot.

(8) Roof drainage may be connected to a street gully pit where the location is suitable.

(9) Where the stormwater from a property discharges through a mountable kerb into the channeling network of the roadway, the design and materials used to create the outfall is of sufficient strength and durability to withstand the loads to which it would be subjected for the duration of the service life of the kerbing into which it has been installed.

9.6.5.3 Urban Residential Inter-lot Drainage

(1) Urban Residential Zone developments in which proposed lots would naturally discharge run-off onto existing or possible future lower lots, or in which higher land would naturally discharge run-off onto proposed lots, will require an inter-lot roof and surface drainage system to Level III standard.

(2) Notwithstanding the requirements of QUDM, where a potential catchment of approximately 0.5 hectares, approximately 8 lots, will contribute overland stormwater flow along the upper side of the rear boundary of adjoining lower lots, an inter-lot drainage system is provided.

(3) A potential catchment is regarded as a contributing catchment which may be created by the erection of fences, earth bunds, retaining walls or similar obstructions along the upper boundaries of downhill lots.

(4) Inter-lot drain lines are constructed on a nominal 0.5 metre alignment in the higher lots with a grated inlet provided in each uphill property to capture surface flow. A 150mm diameter pipe stub with an inspection opening and end cap is provided at the inlet connection.

(5) The standard of lot drainage conforms to the Queensland Urban Drainage Manual (QUDM) Level III. The effects of this drainage upon the trunk drainage system is determined from QUDM Section 5.18.6 and catered for in the developer's proposed design with the catchment boundaries adjusted accordingly.

(6) Inter-lot drain line connections to the trunk drainage system are to a catch-pit, gully inlet pit or access chamber unless otherwise approved by the local government.

(7) The maximum size of a pipe connection to a street catch-pit is 300mm diameter. Larger pipes are connected to access chambers in the trunk drainage system.

(8) Other requirements for the design of inter-lot drainage are generally in accordance with the requirements for the trunk drainage system in this chapter.

(9) All lots that are higher and abut the rear boundaries of lower lots which are less than 450m^2 are provided with an inter-lot drainage system to Level III as specified in QUDM.

9.6.5.4 Commercial, Industrial, Community Management Statements and Multiple Dwelling Lots - Roof and Lot Drainage

(1) Roof and lot drainage is in accordance with -

(a) The Queensland Urban Drainage Manual (QUDM);

(b) *AS3500.3.1 National plumbing and drainage - Stormwater drainage - Performance requirements (1998)*;

(c) *AS3500.3.2 National plumbing and drainage - Stormwater drainage - Acceptable solutions (1998);*

(d) However, the local government's Stormwater Management Code and this policy take precedence.

(2) Within community management statements, multiple dwelling developments and industrial and commercial zoned lots, provisions are made for the interception and collection of roof and surface stormwater run-off within lots, via a pipe connection to a legal point of discharge or street drainage system.

(3) Roof and surface stormwater discharge from community management statements, multiple dwelling developments, industrial and commercial developments is incorporated with the street drainage system and the catchment boundaries are adjusted accordingly.

(4) Overland flow paths are provided and indicated by arrows on a plan view for flows in excess of the capacity of the lot piped system. Calculations for overland flow are required and are certified by the supervising engineer that there is no conflict between the engineering design and the landscaping plans.

(5) Commercial and Industrial lots may have a maximum 3.3 percent AEP (30 year ARI) flood conveyed by underground drainage. An overland flow path is provided to cater for the balance of flow which is a 1 percent AEP storm minus a 3.3 percent AEP storm (100 year ARI - 30 year ARI).

(6) The developer is required to connect to a legal point of discharge on or adjacent to the site as nominated by the local government.

9.6.5.5 Drainage Plan

(1) Drainage plans are to show -

(a) Location of down pipes;

(b) Location, surface and invert level of stormwater inlets, access chambers and grated inlets where applicable;

(c) Location, size, grade, and type of stormwater pipes;

(d) Sufficient surface levels of site and adjacent properties to determine drainage patterns;

(e) External catchments. Provision is made to accept discharge from external catchments when applicable;

(f) Details where stormwater lines cross other services;

(g) Private drainage easements in favour of the upstream property owners, when applicable;

(h) Location of overland flow paths from community management statements, multiple dwelling lots and commercial and industrial sites;

(i) All levels on Australian Height Datum (AHD).

9.6.5.6 Access Chambers

9.6.5.6.1 Dimensions

(1) Access chambers for roof and lot surface drainage systems are 1050mm diameter wholly cast-in-situ units, or reinforced concrete cast in-situ base units with pre-cast concrete upper units. The minimum depth is 750mm.

(2) Where possible, pipes are constructed invert to invert in access chambers for maintenance purposes.

(3) Access chambers are required at junctions and bends where pipes are 225mm diameter or greater. Inspection Y junctions or inspection opening bends are acceptable at other locations.

9.6.5.6.2 Precast Units

(1) Precast units have adbate or equivalent joints for positive prevention of uplift. The starter section is keyed at the base and embedded into a wet cast in-situ concrete base slab. Cut outs for pipe penetrations are made using concrete saws and/or drills in such a manner as to minimise damage to the unit.

9.6.5.6.3 Reinforced Concrete Units

(1) Access chamber shaft sections consisting of reinforced concrete may be pre-cast except that the shaft is cast in-situ to at least a level 75mm above the crown of the highest pipe.

9.6.5.6.4 Base Slabs

(1) Base slabs of access chambers up to 1200mm deep are at least 200mm greater in diameter than the outside diameter of the shaft.

(2) The base slab consists of 10mm maximum aggregate size, class N32 cast in-situ concrete, 100mm thick and reinforced with F82 steel fabric, placed with 40mm cover from the top of the slab.

9.6.5.6.5 Lids

(1) Lids to access chambers match the finished surface ground slope and sit 75mm proud. Lids are bolt down class D type and marked to indicate that they relate to stormwater usage.

9.6.5.6.6 Other Requirements

(1) Access chambers are designed in accordance with *AS3600 - Concrete structures, 2001*.

(2) Access chambers in areas where vehicular traffic may occur are designed for A14 loading.

(3) Access chambers are benched in the same manner as sewer access chambers.

(4) Where an access chamber is provided in a property, the branch line connection to the property is provided from the grated inlet pit rather than from the access chamber. The property branch connection has an inspection opening adjacent to the grated inlet pit.

(5) In all other respects, access chambers for lot drainage will generally comply with the requirements of Section 9.6.6 Minor Drainage System Design - (4) Access Chambers, of this chapter of the policy.

9.6.5.7 Alignment

(1) Lines and access chambers are generally located in the properties they serve.

(2) The centre of access chambers are located from 0.7 metres to 1.2 metres from property boundaries, clear of fences and sewer maintenance holes.

9.6.5.8 Connection Points

(1) Connection points to access chambers or to other lines are located 0.5 metres to 1.0 metres from the lowest property boundary.

9.6.5.9 Outlets

(1) Where applicable, outlets at a catch-pit or access chamber from an inter-lot drainage system to the street are located within 1.0 metre of the lowest side lot boundary.

9.6.5.10 Drain Lines

(1) Roof and inter-lot drainage pipelines are located on a nominal 0.5 metre alignment from the side and rear property boundaries.

9.6.5.11 Grated Inlets

(1) Grated inlet pits for Urban Residential Zone developments with inter-lot drainage are 250mm by 250mm clear opening with a bolt down 300mm by 300mm non-slip pedestrian safe steel grate. A 150mm diameter roof water connection stub with an inspection opening is provided to the inlet.

(2) Grated inlet pits for community management statements, multiple dwelling developments, commercial and industrial developments are a minimum size of 300mm by 300mm clear opening with a bolt down 350mm by 350mm non-slip pedestrian safe steel grate. The actual need and size for grated inlets at these locations is subject to necessity and hydraulic design.

(3) Grated inlets are designed in accordance with *AS3600 - Concrete structures (2001)*.

(4) Grated inlets in areas where vehicular traffic may occur are designed for A14 loading.

9.6.5.12 SMBI Residential Roof Drainage

(1) Except for a lot or premises that is located on the high side of a constructed road with kerb and channel soakage chambers, absorption trenches and rubble pits may be used where located at least 3 metres from any downstream boundary and constructed in accordance with *AS/NZ3500.3.2* Parts 6.4 and 6.5.

Diagram 3

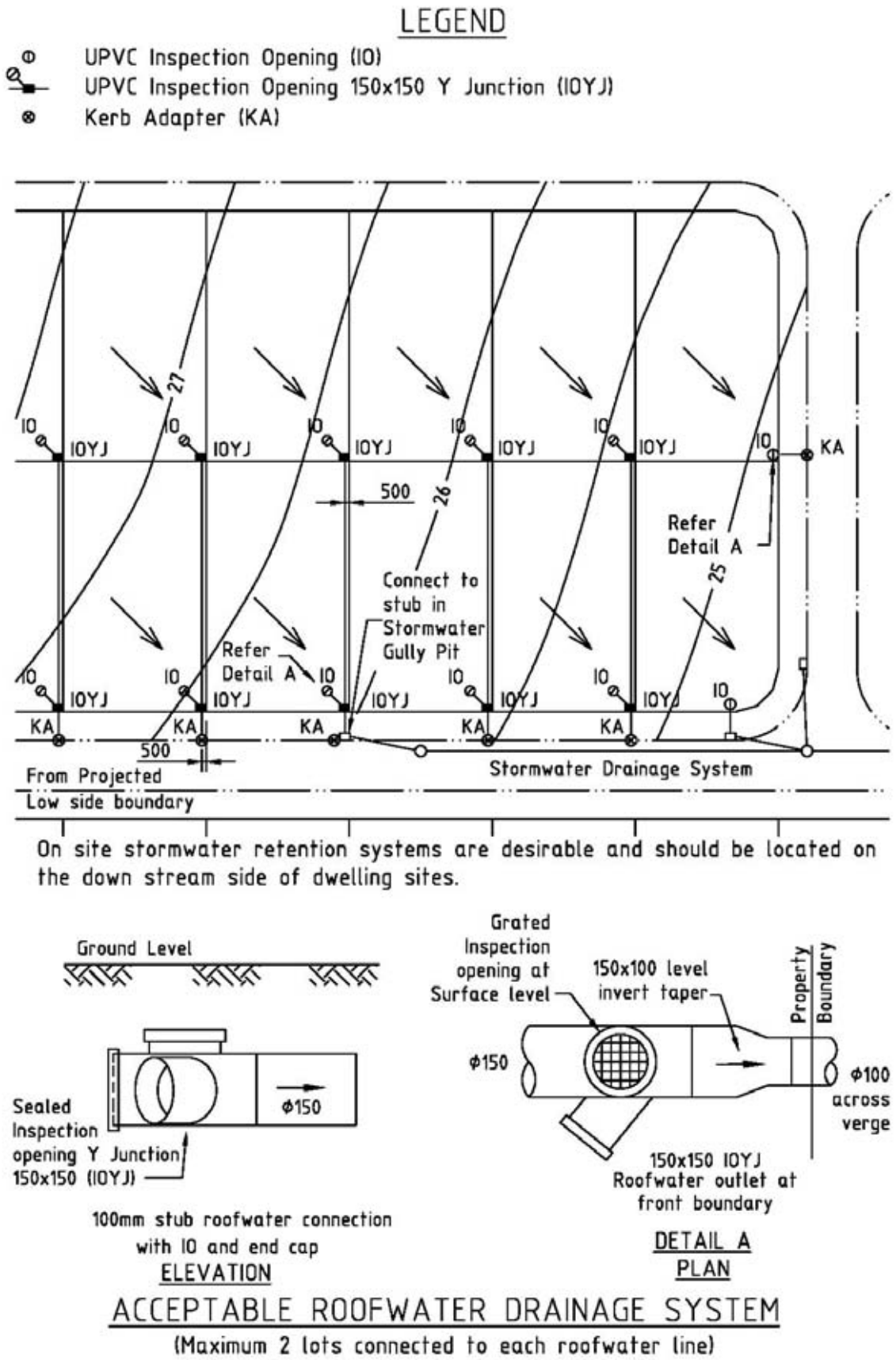

Refer also to Standard Drawing D-RSC-7

Diagram 4

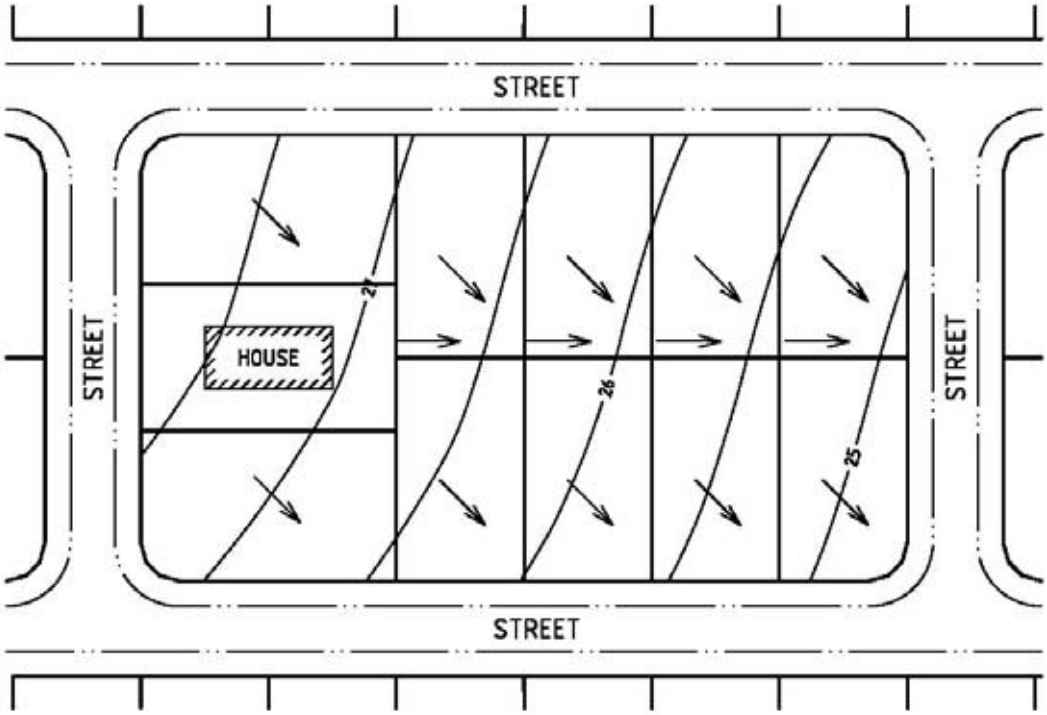

ACCEPTABLE LOT LAYOUT

Appropriate overland flow path. Overland flow commonly flows along rear property boundaries to road reserve

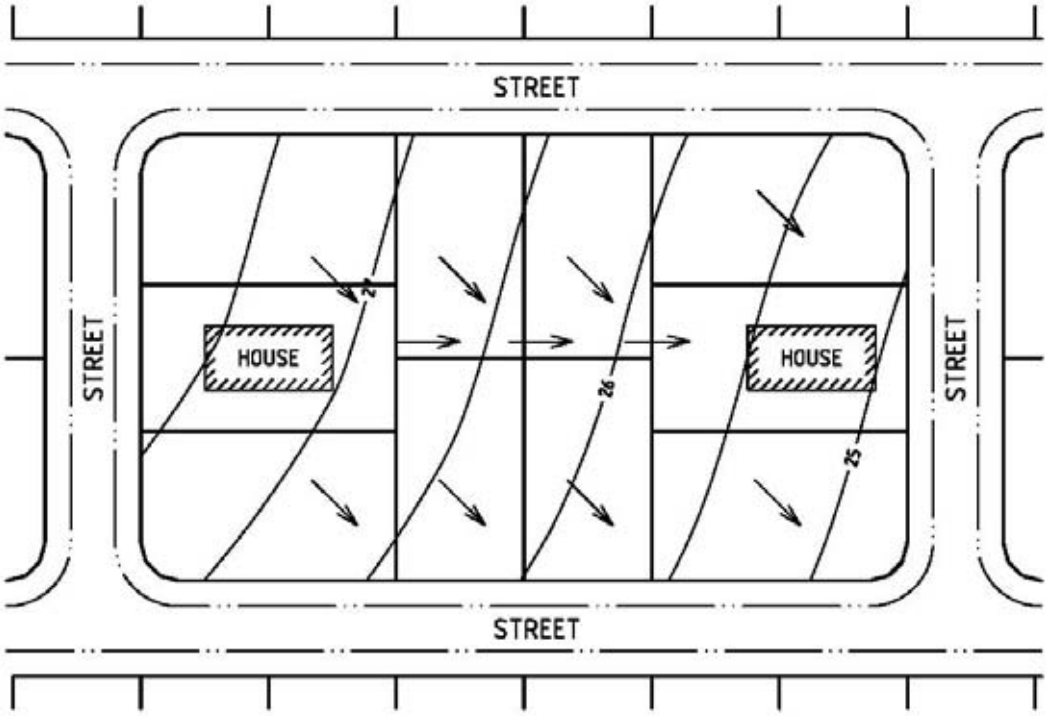

UNACCEPTABLE LOT LAYOUT

Inappropriate overland flow path. Overland flow commonly flows along rear property boundaries and inundates central end lot.

9.6.6 Minor Drainage System Design

9.6.6.1 Kerb and Channel Flow

(1) Further to QUDM, for pedestrian safety, a reduction in flow is necessary at certain locations such as around kerb returns where the kerb radii are approximately 15 metres or less. The maximum flow around a kerb return is 0.03 cumecs.

(2) Roadway capacities may be calculated using methods in the QUDM Volume 1 Clause 5.09. Refer Table 5.09.1.

9.6.6.2 Catchpits

(1) Catchpit Capacity -

(a) The inflow capacity of catchpit inlets is determined in accordance with QUDM Volume 1, clause 5.10 and Table 5.10.1;

(b) The local government's inflow capacity charts, refer standard drawings D-RSC-12 to D-RSC-17 are used for the local government's standard catchpit, refer standard drawings D-RSC-3 and D-RSC-6;

(c) For drainway side inlet manholes inflow capacity charts, refer QUDM Volume 2, Appendix 3 - Inlet Capacity Charts.

(2) Types of Catchpits -

(a) The types of catchpits are as shown in the local government's standard drawings D-RSC-3, D-RSC-6, D-RSC-4 and D-0067;

(b) All catchpits are benched to reduce turbulence.

(3) Catchpit Locations -

(a) Catchpits are located where required in accordance with QUDM. Generally, catchpits are located on the projection of the lot side boundaries;

(b) Where two falling grades meet at an intersection, where possible, the low point is located clear of the kerb return. The crossfall may be varied locally within the range of 2 percent to 5 percent to achieve this. Kerb units are always located on straights. Anti-ponding catchpits are located in a sag on a kerb return with additional catchpits at the kerb tangent points as required;

(c) The tangent point catchpits are designed to collect the total flow with a maximum bypass from each tangent point catchpit to an anti-ponding catchpit of approximately 0.01 cumec. The maximum discharge received at an anti-ponding catchpit is therefore 0.02 cumec;

(d) Other services such as water mains are considered when locating catchpits at intersections.

(4) Catchpits in Medians and Traffic Islands -

(a) Where super-elevation on arterial roads or reverse pavement crossfall will result in pavement runoff flowing against median or traffic island kerbs, catchpits are provided at the ends of medians or islands to prevent flow across the traffic lanes. They will be placed intermittently as necessary to prevent excessive flow width or sheet flow, which may endanger traffic safety as determined by the local government. Refer to Guide to the Design of Road Surface Drainage NAASRA 1986;

(b) Where standard catchpits are used, they are recessed into the median or traffic island with the grate clear of the traffic lane. Where the median or traffic island is of insufficient width, antiponding catchpits may be approved depending on the discharge. Additional catchpits may be required upstream to reduce the flow at these pits.

9.6.6.3 Field Inlets

(1) Field inlets are designed in accordance with QUDM and constructed in accordance with the local government's approved standard drawing D-0050.

(2) The maximum allowable depth of ponding above the grate level of field inlets for design purposes is 225mm.

9.6.6.4 Access Chambers

(1) Access chambers are provided at the locations recommended by QUDM, at changes of angle, at the end of lines, with a minimum depth of 1.5 metres for maintenance purposes. Should approval for a depth of less than 1.5 metres be granted by the local government, a rectangular lid as per the local government's approved standard drawing D-0017 is used.

(2) In accordance with the local government's approved standard drawings numbered D-0010 to D-0017, standard access chambers are used wherever possible, but for multiple junctions it may be necessary to design a special chamber. Such chambers are designed to the requirements of *AS3600 - Concrete structures (2001)* for A14 loading on arterial roads, collector roads, industrial access roads and 75 percent of A14 loading on other roads.

(3) All access chambers are benched to reduce turbulence.

(4) Precast access chambers may be used subject to the following conditions -

(a) Installation is in accordance with the manufacturer's specifications and/or guidelines except that access chambers in road reserves and trafficable areas are fitted with cast iron lids and frames with the converter slab a minimum of 300mm below the finished surface level;

(b) If pre-cast is used, the pre-cast shaft is 75 mm above the pipe obvert and the whole of the access chamber is checked for buoyancy;

(c) The minimum access chamber diameter is 1050mm.

(5) IPWEAQ side inlet access chambers are acceptable. Refer standard drawing D-0067. These may be used as a combination catchpit-access chamber or in conjunction with standard access chambers.

(6) Access chambers may be omitted and substituted with a curve in flat terrain developments provided prior approval is received from the local government. This may be done where the use of curves instead of access chambers would reduce the hydraulic head loss in the system and consequently eliminate surcharge for the design storm.

(7) Long radius curves may be permitted provided that the radii adopted conforms to the manufacturers' specifications.

(8) Short radius curves with splayed pipes may be used with the minimum radius varying from 12 metres for a 1200mm-dia pipe to 15 metres for a 2100mm-dia pipe.

(9) All joints on curves are mortared and have external bands.

(10) The access chamber may be omitted and a factory manufactured joint substituted under the following conditions -

(a) When an anti-ponding catchpit is connected to the main line with a maximum deflection angle of 45° to the main line;

(b) The maximum length of pipe from the anti-ponding catchpit to the joint is 10 metres;

(c) The minimum slope in the connection pipe is 2 percent;

(d) The maximum distance from the centre lines of the joint to the downstream access chamber is 25 metres.

(11) As the geometry of pipes at access chambers is critical with regard to hydraulic head loss, the deflection of flow in plan is reduced to a minimum. All incoming pipes are contained within a 90° arc. Notwithstanding the requirements of QUDM, 90° is the maximum allowable deflection for pipes 600mm diameter and less and 67½° is the maximum deflection angle for pipes greater than 600mm diameter.

(12) Piped drainlines are generally graded obvert to obvert at access chambers where there is an increase in pipe diameter.

(13) Pipes are connected at access chambers using flexible joints allowing for differential movement of the pipes and access chambers.

9.6.6.5 Drainline Locations

(1) Pipe connections between standard catchpits at intersections of Type A roads are acceptable provided the combined maximum discharge is less than 0.15 cumecs, and the deflection angle is not greater than 90°.

(2) Notwithstanding the recommendations of QUDM, the standard location for drainlines in road reserves is as detailed in the local government's approved standard drawings R-RSC-9 and R-RSC-10.

(3) When Institute of Public Works Engineering Australia, Queensland (IPWEAQ) or equivalent side inlet access chambers are used, pipes with a maximum diameter of 600mm may be located under the kerb and channel when running along the road.

(4) Where drainlines are permitted by the local government to be located within lots, easements in favour of the local government are required over the drainlines. The minimum easement widths are in accordance with the recommendations of QUDM Volume 1, Section 3.04 (h).

9.6.6.6 Drainline Inlets and Outlets

(1) The location, invert level, and hydraulic grade level at all pipe outlets requires approval by the local government.

(2) Outlets built such that the invert level is below that of the surrounding land will not be permitted except in special circumstances which require prior approval of the local government.

(3) Approval to discharge stormwater onto private property or local government owned or controlled land is obtained prior to examination of the engineering drawing. Written permission from downstream owners and/or statutory bodies is submitted with the application, including intention to grant an easement, where applicable.

(4) Drainage outlets are constructed a minimum of two metres past the boundary of developed lots. The actual location of the drainage outlet is approved by the local government's representative on site in order to ensure that siltation and scouring at the outlet and at points downstream is avoided.

(5) Safety at drainage inlets and outlets is taken into account in the developer's design.

(6) Stormwater drainage design and routes minimises growth of biting insect populations in sub-divisions proposed near tidal lands, low lying lands or freshwater swamps.

(7) Drains are designed to avoid silt accumulation and be free draining.

(8) Exit points from drains into waterways or wetlands are designed to avoid habitat changes at discharge points, such as will occur if organically enriched drainage from urban areas is directed into mangrove areas or other wetlands.

(9) Misdirected stormwater into mangrove and wetland habitats can create new biting insect production sites or increase existing production by favouring certain aquatic and semi aquatic vegetation species that restrict drainage flow.

(10) Care is taken to avoid increasing tidal influence back up drains into freshwater wetlands as this will increase the possibility of saltmarsh mosquito breeding.

(11) Further advice can be obtained by contacting the local government, Co-ordinator for Mosquito and Pest Management.

9.6.6.7 Culverts

(1) Culvert design is in accordance with the Road Drainage Design Manual, Department of Main Roads Queensland, 2003.

(2) The effect of a 50 percent blockage in culverts is considered in overland flow calculations.

9.6.6.8 Pipe and Other Materials Standards

(1) Pipes and other materials standards will be prepared from time to time and a list of current approved materials will be made available on request.

(2) Materials that will be accepted for use in stormwater pipes include -

(a) uPVC sewer pipe minimum class SN4, or an equivalent uPVC drainage pipe;

(b) uPVC drainage pipe PLASCOR or equivalent rubber ring jointed pipe, of comparable class to uPVC sewer class SN4;

(c) reinforced concrete pipe class 2; or

(d) FRC pipe class 1 or 2.

(3) Pipe class is subject to design where normal conditions vary.

(4) Joint types are to comply with the recommendations of QUDM, Clause 5.13.3. All pipes with an invert below RL 1.6m AHD are designed for saltwater conditions.

(5) Standard manufacturer's fittings are used in all cases, site fitted saddles are not used.

(6) Notwithstanding the requirements of QUDM Clause 5.13.3, the minimum diameter of any pipe is 375mm, except from anti-ponding catchpits on kerb returns, which may be a minimum 300mm diameter.

(7) The standard bedding type for design purposes is in accordance with the local government's approved standard drawings D-RSC-11 and D-0031, unless otherwise recommended by the pipe manufacturer.

(8) Multiple pipes are backfilled in accordance with the pipe manufacturer's recommendations or a specification approved by the local government.

(9) The minimum cover to pipelines along roadways is 600mm or such greater amount as is required to allow for service crossings.

(10) The minimum vertical and horizontal clearance between a stormwater pipe and any other pipe or service conduit is 150mm.

9.6.6.9 Box Section Standards

(1) Notwithstanding the provisions of QUDM Clause 5.13.4, the minimum internal vertical dimension of any box section is 450mm unless otherwise approved by the local government.

(2) Box culvert bases may be cast in-situ with a V shaped invert having a nominal minimum cross-fall of 5 percent (1 in 20).

(3) Where multiple reinforced concrete box culverts (RCBC's) are proposed, one barrel should have such a V-shaped invert, which is the lowest invert.

9.6.6.10 Pipeline Grading

(1) Minimum Velocity - notwithstanding the provisions of QUDM Table 5.16.1, the absolute minimum flow velocities permitted are those given as desirable minimum values in that Table.

(2) Hydraulic Design -

(a) Pipelines are designed to operate under a maximum head of 2 metres at the pipe obvert such that the maximum height of the Hydraulic Grade Line (HGL) is 2 metres above the obvert;

(b) The Hydraulic Grade Line level at the outlet of the system is not lower than any of the applicable items -
- (i) free outlet - obvert of pipe;
- (ii) tidal water - reduced level 1.0 metre AHD;
- (iii) dam or creek - estimated water level for a storm of the design frequency;
- (iv) connecting to an existing pipe system - calculated H.G.L. from the outlet of the existing system, or a known level in the existing system. Consult the local government for information regarding existing design calculations. If the existing system is undersized, the local government will determine the criteria used for design. If the local government does not require the drainage system to be upgraded, the H.G.L. is calculated from the surface level of the first existing structure downstream, at which surcharging occurs.

9.6.6.11 Areas Subject to Tidal Influences

(1) Pipe drainage direct to tidal areas between lowest astronomical tide and highest astronomical tide, of waterways and foreshores, if approved by the local government, Marine Board of Queensland, and the Environmental Protection Authority, are constructed to an approved point of discharge and to such levels as are determined for each case. The design is in accordance with QUDM and ARR. Design tailwater levels are -

(a) Minor storm: Mean High Water Springs (MHWS);

(b) Major storm: Highest Astronomical Tide (HAT)

(2) Concrete design and construction complies with the requirements of *AS3600 - Concrete structures- 2001*, except as specified.

9.6.6.12 Non-Tidal Outfalls

(1) Design of tailwater levels for non-tidal outfalls is in accordance with the details in the Queensland Urban Drainage Manual and the Guidelines - Stormwater Outlets in Parks and Waterways: Brisbane City Council, Version 2/2003.

(2) The discharge level and location are approved by the local government.

9.6.6.13 Drainage in Park Residential Areas (6000m^2 Lots)

(1) Design of drainage in park residential developments complies with the requirements of this Clause.

(2) Full underground drainage to the local government's standards is constructed as necessary to drain every road and such parts of every lot as determined by the local government.

(3) Underground drainage is discharged to natural depressions and waterways.

(4) Underground drainage may not be required within lots where stormwater flow is confined to defined natural waterways and no danger of erosion exists as assessed by the local government.

(5) Provision is made for overland flow paths in approved locations, in addition to underground drainage, to the requirements of the local government. Overland flow is not designed to pass through lots but where this is unavoidable; approval may be sought from the local government to relax this requirement.

(6) Drainage easements in park residential lots are as determined by the local government.

9.6.6.14 Drainage in Parks

(1) Drainage in parks complies with the local government's Park Code and policy; the Flood Prone, Storm Tide and Drainage Constrained Land Overlay Code and policy; and this chapter of the Infrastructure Works Policy.

(2) Waterways, significant natural drainage paths, and flood plains are preserved in their natural state for environmental purposes.

(3) The local government's goals for drainage systems in parks are-

(a) To provide adequate drainage systems to allow for the passage of stormwater in a manner that minimises adverse impact on the natural environment;

(b) The design and construction of drainage systems within parkland has regard to safeguarding life and property and protection against visual and environmental degradation due to changes to water quality, volume and velocity;

(c) The design of parks containing drainage systems has regard to the multi-functional use of the park by integration of the various components to maximise aesthetic, environment, economic and recreational benefits and is capable of effective and efficient maintenance.

(4) The local government recognises the following categories of drainage in relation to public areas within parks -

(a) Natural overland flowpaths in parks - this category is applicable when no underground drainage pipes are required and overland flow through parks is accommodated in a natural creek or waterway, with or without floodplains, at a minimum frequency of 1 percent AEP. Flood flow across a park to the main waterway or creek, at a frequency up to 50 percent AEP, is in a wide shallow sheet flow at a safe velocity and depth for pedestrians. The depth in metres multiplied by velocity does not exceed 0.4.

(b) Natural overland flowpaths and underground pipe systems within parks - this category is the most usual form of drainage within parks used for active recreation. Underground drainage is designed to collect surface run-off within the park. It consists of pipes designed and constructed at a frequency of 100 percent AEP and discharge stormwater from the active recreation area to a location approved by the local government. The overland flowpath/s on the active recreation area, combined with the underground system, discharges stormwater off the recreation area at a frequency of 1 percent AEP without flooding adjoining private property but may inundate playing fields. Flow from external catchments is normally confined to a natural creek or waterway through the park at a minimum frequency of 1 percent AEP.

(c) Detention and retention basins in conjunction with other works - this category may be used to reduce downstream flows and velocities to values acceptable to the local government to enable better use of downstream land by preserving or reducing the extent of flooding downstream. Refer Queensland Urban Drainage Manual, Part 6 - Detention Basins and Australian Rainfall & Runoff, Book 8 - Urban Stormwater Management.

9.6.7 Major Stormwater Management Systems

9.6.7.1 Basic Design Requirement for Stormwater Overland Flowpaths

(1) The requirements for stormwater overland flow is given consideration from the initial conception of a development, and a continuous system of flowpaths, roads, waterways and or park land is provided along artificial and natural drainage routes.

(2) Notwithstanding the requirements of QUDM, it is the local government's clear intention to discourage forms of development where more than 10 percent AEP (10 year ARI) storm discharge from Urban Residential Zone and Medium Density Residential Zone areas is conveyed by underground drainage. Commercial and industrial areas may have a maximum 3.3 percent AEP

(30 year ARI) flood level conveyed by underground drainage. An overland flow path is provided to cater for the balance of the flow.

(3) In existing areas where there is limited available overland flowpaths, alternative methods may be considered such as detention and retention basins. Refer to Queensland Urban Drainage Manual, Part 6 - Detention Basins and Australian Rainfall & Runoff, Book 8 - Urban Stormwater Management.

(4) The backwater effect (afflux) caused by the construction of structures such as roads, culverts or causeways is not to create nuisance or adverse flood effects to upstream or adjoining lots.

(5) The effect of a 50 percent blockage in culverts, inlets and catchpits is considered in overland flow calculations to ensure that building floor levels are not inundated.

(6) Design calculations, in accordance with the Queensland Urban Drainage Manual (QUDM), or Australian Rainfall and Runoff (ARR) as appropriate, are submitted to satisfy the local government that these requirements are satisfactorily complied with. This information is submitted with the development application.

9.6.7.2 Location of Overland Flowpaths

(1) Notwithstanding the requirements of QUDM, overland flowpaths from external catchments are not directed through private property except through Park Residential Zone and Rural Non-Urban Zone lots where a drainage easement is provided for maintenance purposes. In community management statements, retirement villages and commercial developments where, in the opinion of the local government, the external flow path can be accommodated within the lots, a drainage easement of appropriate dimensions to facilitate maintenance is provided.

(2) Overland flow paths located between lots are not less than 15 metre in width and the flow conditions conform to the same requirements as for downhill access places, culs-de-sac, as stipulated in this chapter.

(3) Pedestrian and vehicular access to sewerage pump stations is not impeded by overland flow at any time, particularly in times of emergency when flooding occurs.

9.6.7.3 Overland Flow in Roads

(1) Limitations for overland flow in roads and streets conform with the requirements in QUDM Clauses 5.08 and 5.09, except that where lots are below the road level, the depth of flow is not above the top of the kerb. Even if the footpath is formed higher, it may be later cut down at driveway crossovers.

9.6.7.4 Overland Flow in Parks

(1) The width of any overland flowpath in parkland between building sites is determined by calculation, but is not less than 15 metres.

(2) The 1 percent AEP level in parks is generally preserved in its natural existing condition.

(3) The 50 percent AEP level is generally designed as a sheet flow, taking into consideration -

(a) scour prevention;

(b) downstream flood reduction by maintaining or increasing the existing time of concentration.

9.6.7.5 Overland Flow from Downhill Access Places (Culs-de-sac)

(1) Downhill culs-de-sac are provided with an overland flowpath designed to cater for excess flow not contained in the underground drainage system for a 1 percent AEP (100 year ARI) level.

(2) The design limits are deemed to comply with the following requirements -

(a) the minimum width of the overland flowpath at the road reserve boundary is 15 metres with a maximum contributing catchment area of 2 hectares;

(b) the road verge at the sag location has a nominal 3 percent fall from the top of the kerb to the adjacent edge of the road reserve, along the centre line of the overland flowpath. Overland flow will not encroach on any adjacent property;

(c) the stormwater inlet at the low point of the kerb and channel is a side inlet access chamber or similar approved inlet;

(d) the turfed flowpath is constructed in a V shape to minimise silting and restrict wet areas;

(e) pedestrian concrete paths are constructed clear of the flow path above the 50 percent AEP line to the satisfaction of the local government;

(f) maximum flow depth is 150mm;

(g) maximum velocity is 2.0m/s;

(h) maximum side slope is 1 in 6;

(i) maximum depth of excavation is 0.50 metres.

9.6.8 Environmentall y Sensitive Soil Areas

9.6.8.1 General

(1) The intention of this section is to address stormwater drainage disposal in areas where there are environmentally sensitive soils such as sand, sandy loam or similar extensively erosion prone soils. The aim is to achieve high management standards in stormwater disposal in such areas by identifying and addressing related issues and formulating strategies.

(2) Definitions -

(a) On Site Detention (OSD) - means a temporary storage of stormwater located at the site, either at surface level or underground, with no or little restrictions to flow movement into the ground;

(b) Discharge Control Mechanism (DCM) - means the mechanism that controls the outlets discharge from OSD;

(c) Catchment Area - means the area of precipitation contributing for stormwater flow generation at a particular location in concern;

(d) Control Area (CA) of OSD - means the contribution of catchment area from which the flow of the 50 percent AEP (2 year ARI) event is fully diverted into the ground by the OSD;

(e) Sub-surface Flow - means the part of stormwater diverted into the natural ground as ground absorption;

(f) Annual Exceedance Probability (AEP) - refer to Schedule 3, Division 2 - Administrative Terms of the planning scheme;

(g) Permissible Site Discharge (PSD) - means the maximum allowable discharge for a particular AEP storm leaving the site;

(h) Site Outlet Level (SOL) - means the invert level of the outlet opening of the OSD to allow escape of excessive spill overflows.

9.6.8.2 Issues and Controls

(1) Lot Layout Issues –

Lot layout and streetscape control stormwater drainage disposal to some extent. The layout of a development is determined so that strategies described in this chapter are achieved. Focus is given to minimising inter-property drainage problems.

(2) Loss of Sub-surface Infiltration -

Ground surface sealing by development works is inevitable. Roofs, footpaths, tennis courts, car parks and such like are main contributors. As a result of building activities, ground water infiltration that could exist in an otherwise natural state is certainly reduced or even completely sealed off in some locations. Fine loams and sandy areas have a very good potential for high sub-surface infiltration with naturally existing granular sub-surface conditions. Therefore the effect of surface sealing could bring long term detrimental changes to the natural drainage pattern of the areas. This section identifies the need for compensating the loss of natural ground water infiltration in developments, using flow retardation or detention basins on porous media. Therefore, OSD facilities are provided in all such lots in these areas.

(3) Maintenance and Operations of OSD Facilities -

(a) OSD facilities on private property are maintained by the property owner. This section identifies measures for protection against likely blockages that could occur at the inlet or outlet side of OSD -
   (i) suitable grates are used in the inlet side;
   (ii) flows other than stormwater are not discharged to or from OSD;
   (iii) the local government requires certification for OSDs in private properties, pursuant to relevant section(s) of the Environment Protection Act 1994. The local government may carry out inspections of these facilities from time to time. A plan indicating their location is submitted to the local government by the developer.
   (iv) overflows from upstream OSDs may be connected to another OSD downstream. However, the numbers of such series connections of OSD facilities are limited to a maximum of 2 connections as failure of the one connection may affect the performance of the other.

(4) Erosion by Flow Concentration -

Fine granular material is found in most parts of North Stradbroke Island, some parts of the Southern Moreton Bay Islands and occasionally on the mainland of the local government area. These materials are vulnerable to erosive forces. Flow concentration on these kinds of materials could lead to scouring. There is an identified need for taking adequate and effective precautions in the way of erosion control in all situations of flow concentrations.

9.6.8.3 Design Considerations

(1) General -

(a) Overland flow from sites adjoining roads and flow from external undeveloped catchments as referred to by area Type (b), see reference below, flows to the road reserve. Considerable flow could accumulate on the road surface depending on how large this area is. Kerbing and channeling flow along pavements is considered as the general method of conveying surface flow from properties to the natural drainage paths and ponding areas. All necessary actions needed are taken to minimise erosion at all outlets;

(b) The flow depth and width requirements conform to the requirements of the Queensland Urban Drainage Manual (QUDM).

(2) Major Flood Events.

(a) Erosion control measures such as outlined in Chapter 4 of this policy or other approved methods are required when flows are likely to cause extensive erosion damage during major flood flows.

(3) Minor Flood Events -

(a) The minor flood flows are reduced as a result of the incorporation of OSD facilities. Theoretically, no flow will be generated from Type (a) areas, see reference below, unless greater than a 50 percent AEP event occurs when all the OSD facilities are functioning without fail. However, a margin of 20 percent of Type (a) area is allowed as a safety factor against malfunction of some OSD facilities.

(4) OSD facilities -

(a) OSD locations are decided by the topography of the site or the CA of the OSD;

(b) Pipes from roof water and any sealed areas such as driveways, tennis courts or similar are directly connected to OSD storage;

(c) Pipes are provided for connection of future and proposed sealed areas and the developer provides inlet structures to intercept all the run-off in the interim;

(d) Provision is made for reasonable access to the OSD for cleaning purposes;

(e) Developers are to obtain the local government's endorsement for use of particular OSD methods that satisfy the considerations of this section;

(f) The run-off to OSD is governed by the catchment area at the location of the OSD. The catchment is likely to be comprised of two area types -
(i) Type (a) - the site;
(ii) Type (b) - any external upstream area that is not subject to development;

(g) The Type (a) area is the CA of OSD. As the area Type (b) could not be classified as a site, the developer is not required to make arrangements for flow retardation from this area. Area Type (b) could be much larger compared to area Type (a) and therefore OSDs are designed for safe bypassing of flows generating from area Type (b);

(h) The size of OSD storage is determined as follows -
(i) run-off flow at 50 percent AEP event that is contributed by the CA of OSD is not allowed to escape from OSD storage;
(ii) the permissible site discharge (PSD), based on the CA of OSD for 10 percent AEP is the difference of peak flows between 10 percent and 50 percent AEP flood events of respective storms;
(iii) storage routing for sizing OSDs is carried out for all storm durations, incorporating relevant percolation rates, depending on the soil conditions, in order to find out the highest storage requirements. Scouring at the outlet is minimised by controls at the SOL.

this page purposely
left blank

Chapter 7 - Water Reticulation

9.7.1 Purpose

The purpose of this chapter of the policy is to set out the requirements for the preparation and submission of plans and technical reports for the design of water reticulation associated with development applications involving reconfiguration of lots, or development or redevelopment of a lot under the planning scheme.

9.7.2 Applicabilit y

This chapter of the policy applies to all development under the planning scheme which has a requirement to provide reticulated water.

9.7.3 General

(1) The design and construction of water supply complies with -

(a) the Water Services Association of Australia - *The Water Supply Code of Australia*;

(b) the Queensland Addendum to the *Water Supply Code of Australia*;

(c) the local government's requirements as modified in this policy;

(d) the local government's approved standard drawings.

(2) Local government staff will make all connections or alterations to the local government's existing water reticulation mains at the developer's expense.

(3) Requests for connections are in writing with specific details of work required.

(4) The local government reserves the right to refuse to complete the connections until such work is paid for and accepted On-Maintenance.

(5) All work is supervised by a Registered Professional Engineer (Queensland), competent in design of water reticulation.

9.7.4 Customer Demand

(1) Where applicable, the local government will ascertain, in the form of a network analysis, whether adequate flow for fire fighting and customer demands are available. Where a staged development is proposed, future development are included in the analysis. The results of the analysis are advised to the applicant for incorporation in the application for operational works.

(2) The applicant is to submit to the local government a contoured lot layout plan.

(3) Demand is determined in accordance with the *Water Supply Code of Australia*, clause 2.2.2, Assessment of Demand - Forecast of future demand.

(4) Allowance for fire fighting flow is in accordance with *Guidelines for Planning and Design of Urban Water Supply Schemes Chapter 21A - Fire Fighting,* as released in the Department Of Natural Resources Technical Bulletin TB No:3/1997 September 1997.

9.7.5 Elevated Areas

(1) Developers should note that some locations in the local government area are above the level that can be supplied by gravitation from existing works. In these cases, the developer is required to -

(a) obtain local government's requirements for the provision of a water service to such locations; or

(b) excise the elevated area from the proposed development.

(2) It is the developer's responsibility to determine in writing from the local government whether the proposed development is situated in such elevated areas and is therefore liable to require extra works. The developer's responsibility for such works applies irrespective of whether or not the proposed development has been approved.

9.7.6 Alignment

(1) Water mains are located on the standard alignment on the low side of the street in accordance with the local government's approved standard drawings R-RSC-9, R-RSC-10, W-RSC-2 and W-RSC-5 unless directed otherwise.

(2) Normally this will mean that the main is located 1.5 metres off the front property alignment.

9.7.7 Existing Mains

9.7.7.1 Information

(1) The local government may be contacted to provide As-Constructed plans of water, sewerage and drainage services, for a fee, the amount of which is revised annually.

(2) Theoretical values of hydraulic grade line (HGL) are available at various points within the water supply network.

(3) The local government can provide actual pressure/flow information at a specified hydrant after payment of the required fee.

9.7.7.2 Relocation

(1) Where the proposed development would cause existing mains to locate on non-standard alignments or have less than minimum cover, the developer is responsible to bear the cost of such relocation, replacement or lowering as is required by the local government.

(2) Should existing mains requiring relocation be asbestos cement, the developer is to bear the cost of their replacement with pipes of a material as approved by the local government.

9.7.8 Crossing Existing Main Roads and Railways

9.7.8.1 Main Roads

The Developer is to obtain the written approval of the Department of Main Roads if it is proposed to construct mains under Department of Main Roads infrastructure.

9.7.8.2 Railway Crossings

The Developer is to obtain the written approval of Queensland Rail if it is proposed to construct mains under a railway line. Such crossings are designed and constructed in accordance with the requirements of Queensland Rail.

9.7.9 Pipe Sizes and Multiple Feed Reticulation

(1) The local government will confirm the size of mains required for the provision of a water supply service to the development.

(2) The reticulation layout for new developments of more than 100 lots will be such that multiple feeds to the development are designed so that no more than 100 lots would be without water in the event of a burst water main in any part of the development reticulation.

9.7.10 Backfill Material Under Roads

(1) Water mains and conduits under roads are laid prior to completion of the gravel pavement.

(2) Under existing roads or where construction is delayed beyond that stage, lean-mix concrete or an approved equivalent backfill to trenches across roads is required.

(3) Mains laid prior to the pavement being constructed are backfilled with gravel compacted to the level of the sub-grade.

9.7.11 Fire Hydrants

(1) Fire spring hydrants -

(a) are provided at not greater than 80 metre intervals on road reserves and are located opposite a common side property boundary and are within 90 metres of an existing or potential development;

(b) are provided on-site in accordance with -
(i) *Australian Standard 2419.1:1994 - Fire hydrant installation - System design, installation and commissioning*;
(ii) the *Building Code of Australia*;
(iii) the Queensland Fire and Rescue Authority.

(2) Hydrants are required at high points of reticulation mains for air control where an air-release valve is not available.

(3) Hydrants are installed at intervals not exceeding 80 metres along all internal accessways and are clearly marked to the local government's approved standards.

(4) Long hydrant mains of more than 100 metres are to be checked to ensure that the minimum fire fighting flow is achieved at all hydrants at peak usage times, in accordance with *Australian Standard 2419.1:1994 - Fire hydrant installation - System design, installation and commissioning*. Calculations are submitted to the local government with the building application.

9.7.12 Deviation of Mains

Notwithstanding the recommendations by some manufacturers, pipe sections are not bent around curves unless specifically approved by the local government.

9.7.13 Valves

Valves are located as per the reticulation layout plan. Where applicable, valves are immediately adjacent to a Tee within the verge.

9.7.14 Tees

Tee connections to existing mains which are 150mm diameter or larger are flanged Tees and valves.

9.7.15 Dead Ends and Culs-de-Sac

(1) Dead ends in culs-de-sac are not permitted.

(2) Where a cul-de-sac contains five lots or less, 100mm or 150mm diameter mains extend all the way around the cul-de-sac on both sides of the road as indicated on approved standard drawing W-RSC-5.

(3) At a cul-de-sac with 5 lots or more or if the main passing the cul-de-sac is 200mm diameter or larger, the main extends around the head of the cul-de-sac and then cross the road and connects back into the main with a tee. A tee and valve is provided at the intersection. The arrangement is shown on the local government's approved standard drawing W-RSC-5.

9.7.16 Connections and Conduits

(1) The developer is to provide at least 100mm diameter rubber ring jointed uPVC, PVC-M, OPVC Class 9 or SN4 conduits across roads and ensure that they are located and terminated as indicated on the local government's approved standard drawings R-RSC-9 and R-RSC-10.

(2) A water service connection is provided to each lot, on new and existing mains, including tapping bands or ready taps, in accordance with the local government's approved standard drawings W-RSC-3 and W-RSC-4.

(3) The services into each of the proposed lots are to include a water meter in accordance with the local government's approved standard drawings.

(4) The location of water connections is shown on the design and As-Constructed plans. Refer approved standard drawing number W-RSC-5.

(5) Where the local government's conditions of reconfiguration require the developer to construct a footpath or bikeway on the road verge, or where a path exists, the conduit is extended 300mm past the footpath or bikeway and then the developer either -

   (a) completes construction of the footpath; or

   (b) provides a bond to the local government to construct the path after the installation of all water services in the section of subdivision or road verge concerned.

(6) The horizontal alignment of the conduit is selected such that the conduit is placed adjacent to a common side property boundary, as shown on approved standard drawings R-RSC-9 and W-RSC-5. An approved non-corrosive metal indicator disc inscribed "W" is fixed flush on the kerb to indicate the position of the conduit.

(7) The developer is to install a minimum of one 32mm diameter water service terminating with a water meter in all parks within the proposed development. A 32mm diameter quick coupling bayonet fitting with a suitable back-flow prevention device and a cast iron service box is installed at the developers cost at a location approved by the local government.

(8) No water service connection is installed within 4 metres of a dead end such as a temporary dead end on a main.

9.7.17 Markers

(1) Blue hydrant pavement markers and yellow valve pavement markers are required as per WSAA standard.

(2) Water service kerb and channel conduit markers are shown on approved standard drawing R-RSC-13.

(3) Marker posts are to indicate the location of all air valves, and scour valves. The marker post is located immediately adjacent to these fittings.

(4) At locations where there is no kerb and channel, marker plates are fixed to marker posts as shown on approved standard drawings numbered W-0010 and WAT-1300. Marker posts are located 0.1 metre from the front property alignment.

9.7.18 Water Meters

(1) Water meter installation is in accordance with the local government Local Law No.31 - Water Supply.

(2) A water meter is provided to each lot in accordance with approved standard drawings W-RSC-3 and W-RSC-4.

(3) The water meters are supplied by the local government to the developer at approved rates.

(4) The details of the water meters and their locations are made available by the developer in the prescribed form prior to the local government being required to accept the development On-Maintenance.

(5) In the case of higher density developments such as apartment buildings, multiple dwellings, aged persons and special needs housing, mobile home parks and the like -

(a) a common master meter will be installed by the local government at the developer's expense and the developer is required to provide individual meters to each unit or property;

(b) details of the location, meter number and reading of each individual meter are to be provided to the plumbing inspector at the time of inspection;

(c) a water meter is also required at hydrant lines (bypass meter).

(6) A single or double detector check valve is required on dedicated fire services and a bypass meter installed with the valve. The size and the location of the service are provided to the local government when requesting installation estimates.

9.7.19 Preferred Materials

(1) All materials used comply with the requirements of the relevant Australian Standards and are manufactured, inspected and tested, as stated in such Standards.

(2) Approved types of pressure pipes are -

(a) uPVC Class 16 Spigot and socket rubber ring jointed;

(b) PVC-M Class 16 Spigot and socket rubber ring jointed;

(c) OPVC Class 16 Spigot and socket rubber ring jointed;

(d) DICL Class K9 Spigot and socket rubber ring jointed.

(3) Pipes suspended above ground are D.I.C.L. Class K12 (flanged).

(4) D.I.C.L Class K9 pipes are used for all major road crossings and longitudinally under roads.

(5) D.I.C.L. pipes are externally coated with two coats of bituminous paint. Where D.I.C.L pipes are buried, the pipes are protected with polyethylene sleeving 0.2mm thick, complying with the requirements of *Australian Standard 3680:1989 - Polyethylene sleeving for ductile iron pipelines*, which are installed to the pipe manufacturer's specifications and details.

(6) Pipes in roads which are controlled by the Department of Main Roads are subject to their design criteria.

(7) Cast iron sluice valves are to conform to *Australian Standard 2638.1:2002 - Gate valves for waterworks purposes - Metal seated*, and *Australian Standard 2638.2:2002 - Gate valves for waterworks purposes - Resilient seated*.

(8) All valves and hydrants are coated internally and externally with a fusion-bonded epoxy or equivalent and all nuts, bolts and washers are 316 stainless steel.

(9) The barrels of any gibault joints used in the development are either cement lined or coated with a fusion-bonded epoxy or equivalent.

(10) All bolt threads are coated with an approved anti-seizing compound prior to installation.

(11) Bends and junctions are to conform to *Australian Standard 2544:1995 - Grey iron pressure fittings*.

(12) All flanged pipes and fittings conform to *Australian Standard 4087:1996 - Metallic flanges for waterworks purposes.*

9.7.20 Construction Accuracy

(1) Before laying of water mains, sufficient property pegs and leveling pegs are placed to establish that the water main is laid to the correct level and alignment, and is strictly in accordance with the design plan approved by the local government.

(2) Unless otherwise shown, mains are laid on a 1.5 metre alignment on the low side of the road. This alignment is maintained around culs-de-sac heads by the use of bends and deflections in pipe joints as approved by the manufacturer.

9.7.21 Pressure Testing

(1) Pressure testing and test procedures are in accordance with the *Water Supply Code of Australia*.

(2) The Consulting Engineer is to give the local government a minimum of 24 hours notice of the time and location of where the pressure test is to take place.

9.7.22 Bacteriological Testing and Disinfection

(1) Bacteriological testing and disinfection including dosing, sample collection and laboratory testing complies with the requirements of the *Water Supply Code of Australia*.

(2) A National Association of Testing Authorities (NATA) registered laboratory is engaged to collect representative water samples from the test section of the water main.

(3) Before any water main is placed On-Maintenance -

   (a) all laboratory quality tests results are supplied to the local government by the Consulting Engineer;

   (b) a written recommendation from a NATA registered laboratory as to the suitability of newly constructed water mains connected to the Local Government's water distribution system is supplied to the local government.

(4) If the On-Maintenance request is not made within two weeks of obtaining the test results, the system will require re-testing at the developer's expense.

9.7.23 As-Constructed Information

As-Constructed information is provided in accordance with the local government's approved standard drawing W-RSC-2. Refer to requirements detailed in Chapter 2 - Documentation and General Conditions of this policy.

this page purposely
left blank

Chapter 8 - Sewerage Reticulation

9.8.1 Purpose

The purpose of this chapter of the policy is to set out the requirements for the preparation and submission of plans and technical reports for the design of sewerage reticulation associated with development applications involving reconfiguration of lots or development or redevelopment of a lot under the planning scheme.

9.8.2 Applicabilit y

This chapter of the policy applies to all development under the planning scheme which has a requirement to provide reticulated sewerage.

9.8.3 General

(1) The design and construction of sewerage infrastructure complies with the *Water Services Association of Australia, Sewerage Code of Australia: the Queensland Addendum to the Sewerage Code of Australia* and the local government's requirements as modified in this chapter of the policy and approved standard drawings.

(2) Before proceeding with design, the Consultant Engineer is to obtain -

(a) the approval of the local government for the proposed size of all sewers as well as the proposed location of trunk sewers and pumping stations and the capacity of such pumping stations;

(b) from the local government As-Constructed sewer information relevant to the proposed development;

(c) confirmation from the local government of approved point/s of connection to existing sewers.

(3) At the applicant's expense, local government staff will make all connections or alterations to local government sewers.

(4) Requests for connection are in writing with adequate details of work required.

(5) The local government reserves the right to refuse to complete the connections until such work is paid for and accepted On-Maintenance.

(6) Where staging of a development is proposed, additional information is required as stated in Chapter 2 - Documentation and Engineering Conditions of this policy.

(7) All work is supervised by a Registered Professional Engineer (Queensland) competent in sewerage work.

9.8.3.1 Main Roads

The Developer obtains the written approval of the Queensland Department of Main Roads if it is proposed to construct sewers under Queensland Transport infrastructure.

9.8.3.2 Railway Crossings

The Developer obtains the written approval of Queensland Rail if it is proposed to construct sewers under a railway line. Such crossings are designed and constructed in accordance with the requirements of Queensland Rail.

9.8.3.3 Local Government Roads

(1) A sewer may cross a road to reduce the number of access chambers required, provided connections are not located under the road.

(2) Trenching and backfilling at sewer crossings of existing local government roads are to comply generally with the details in the local government's approved standard drawings. The pipe is bedded in sand surround, then back-filled for a minimum depth of 450mm with lean mix concrete (1:20 mid). A 40mm thick AC road surface is placed over the lean mix back-fill and is to extend 200mm each side of the trench.

(3) Sewers constructed under new roads are back-filled from the pipe sand surround with base course gravel.

9.8.4 Location of Sewers

9.8.4.1 General

(1) Where practicable, sewer lines are located on the alignments shown in Table 1.

Table 1 - Alignments

Location	Distance from Property Alignment	
	Desirable	**Maximum**
Front of Private Property	1.2 metres to 2 metres	4 metres maximum at curves
Side of Private Property	1 metre	1 metre
Rear of Private Property	1 metre	2 metres
Street Verge	2 metres on the high side of type A and B streets	

Note -

Sewer lines are not permitted in the front of private property in lots fronting type A and B streets which have a road reserve width of 18 metres or less. Sewer lines are located in the front of private property on all higher order roads.

(2) When available, trunk mains or sewerage rising mains may be located on the standard alignment in the water allocation on the high side of the road reserve in accordance with approved standard drawing R-RSC-9 and R-RSC-10.

(3) Sewers are constructed at right angles or parallel to lot boundaries and not across boundaries at acute angles.

(4) Where sewers are located adjacent to roof drainage lines, the connection branch for the sewer is extended 1 metre beyond the outer edge of the roof drainage line.

(5) Property boundaries are pegged before setting out of sewer lines.

(6) When sewers are proposed through land other than that owned by the developer, written approval is obtained from the property owner and submitted to the local government with the design drawings. This will include connections to existing sewers performed by the local government.

9.8.4.2 Centre and Industrial Zones

(1) In areas which are zoned for centre or industrial activities, proposed sewers are not located under potential building areas. Every effort should be made to construct the sewer outside the lots, but where sewers have to be constructed within the lots, the developer -

(a) supplies the proposed footprint of the future buildings;

(b) constructs sewers clear of the proposed footprint.

(2) Where sewers have to cross a building footprint, construct the sewer in the most appropriate location and of adequate strength at the time of initial construction rather than reconstruct the sewer at the time of construction of the building.

(3) Provide easements over sewers in the lot to ensure they stay clear of future buildings or in the best location within the footprint.

(4) The local government may require the relocation of an existing sewer which conflicts with a proposed building site. If relocation is not feasible, the developer may seek the approval of the local government to build over the sewer. In such cases, foundations are to bridge the sewer. No approval will be given to build over sewers greater than 150mm diameter.

9.8.5 Connectio n Branches

(1) Connection branches are constructed in accordance with the local government's approved standard drawings.

(2) The applicant is to ensure that the sewerage connections are at a level to service the entire property. In the event that the level of these connections results in them being greater than 1.5 metres in depth, the adjacent sewer main is to control the entire premises, with the connections brought up to a maximum depth of 1.5 metres in accordance with the local government's standards.

9.8.5.1 Location of House Connection Branches

(1) House connection branches are generally located 1 to 1.2 metres upstream of the premises boundary and, where applicable, house connections extend a minimum of 1 metre beyond the property boundary.

(2) Written approval is obtained from the local government when house connections are proposed through premises other than that owned by the developer.

9.8.5.2 House Drains

(1) House drains are designed at 1 in 40 with a minimum depth at the head of the line of 0.5 metres to invert. A grade of 1 in 60 is only acceptable for control of the most upstream house drain connected to each main in areas with very flat terrain.

(2) Industrial activities may have house connections graded at 1 in 60 with 0.5 metres cover at the head of the line.

(3) Connections from fixtures to local government sewers are generally classed as private drains and as such, are designed in accordance with the relevant standards and inspected by the local government's plumbing inspectors.

(4) Combined house drains are not permitted.

(5) Requirements for house drains are laid down in the *Sewerage and Water Supply Act*, subordinate legislation and *AS/NZS 3500:2003 Plumbing and Drainage*.

9.8.5.3 Other Requirements

Local government parks and reserves are provided with a connection to the sewer unless otherwise approved. Generally, these connections are required where the local government considers that public amenities may be installed in the future.

9.8.6 Minimum Grades and Cover

(1) The minimum grade of each sewer section between maintenance structures is taken as the steeper value as is determined from -

(a) a minimum velocity at the actual design maximum anticipated rate of flow in that sewer section of 0.6 metres per second;

(b) that identified in Table 2.

(2) The maximum number of tenements served on sewer lines is as identified in Table 2.

Table 2 - Maximum Number of Tenements

Diameter	Minimum Grade	Maximum Number of Tenements Served
150mm	1 in 80 for 1st 5 lots and 1 in 150 thereafter	200
225mm	Refer Table 4.6 SCA-WSAA	420
300mm	Refer Table 4.6 SCA-WSAA	Refer WSAA
375mm	Refer Table 4.6 SCA-WSAA	Refer WSAA
450mm	Refer Table 4.6 SCA-WSAA	Refer WSAA
525mm	Refer Table 4.6 SCA-WSAA	Refer WSAA
600mm	Refer Table 4.6 SCA-WSAA	Refer WSAA
675mm	Refer Table 4.6 SCA-WSAA	Refer WSAA

(3) Industrial estates may be graded at 1 in 100 for the first 3 lots, then 1 in 150.

(4) Before road pavement pre-seal inspections, levels are taken to confirm that the minimum grades have been achieved under all roads.

(5) Minimum grades on pressure mains -

(a) pipes 100mm diameter and 150mm diameter are graded 1: 400 rising and 1:250 falling;

(b) pipes 225mm diameter and larger are graded 1:500 rising and 1:250 falling, or as directed by the local government.

(6) The minimum cover to the top of unprotected sewers pipes are detailed in WSAA Table 4.8.

Note -

At the front of private property or within the road verge, the crown of the sewer and house connection branches are a minimum 600mm below the level of the adjacent kerb to allow for possible excavation of driveways on the high side of the roadway.

(7) Where practical, the minimum vertical clearance from the outside surface of a sewer to the outside surface of an adjacent stormwater line or other service is 300mm. The space between the pipes is backfilled with sand.

(8) Where a 300mm clearance is not possible, a 3 metre length of D.I.C.L. pipe is provided.

(9) The minimum cover under an existing roadway to the outside surface of a D.I.C.L. sewer is not less than the pavement depth plus 200mm of sand or lean mix concrete backfill.

9.8.7 Materials

9.8.7.1 Sewer Pipes

(1) The types of pipe allowable for use in sewers are -

(a) PVC-M (Class 16);

(b) OPVC (Class 16);

(c) UPVC Class SN4 or Class SN8 (depending on depth and soil type);
(d) Ductile Iron Calcium Aluminate Cement mortar lining or equivalent, Class K9 with polythene sleeving;

(e) Hobas G.R.P.;

(f) "Ultra-Rib" uPVC sewer pipes may be used for trunk mains only. They are not used where house connections are required.

(2) In Industrial Subdivisions only uPVC, PVC-M, OPVC and DICL pipes are used unless otherwise approved by the local government.

(3) Concrete surround is not used with PVC pipes.

9.8.7.2 Pipe Bedding

Pipe bedding and bedding materials are in accordance with the local government's approved standard drawings.

9.8.8 Maintenance Structures

9.8.8.1 Location of Maintenance Holes and Shafts

(1) Maintenance holes and shafts are designed in accordance with local government approved standard drawings and the *Sewerage Code of Australia WSA 02-2002* except as amended herein.

(2) Maintenance holes are used at the following locations -

(a) all junctions and drops;

(b) all lots that are zoned commercial or industrial.

(3) Maintenance holes are required at the above locations for ease of maintenance and on commercial and industrial sites in order to gain access to obtain trade waste samples for analysis and to carry out visual inspection of pipe work.

(4) Maintenance structures may be located in a street verge on Type A and B streets and in residential lots in accordance with the *Sewerage Code of Australia WSA 02-2002*.

(5) Maintenance shafts may be located in a verge provided they are in accordance with the *Sewerage Code of Australia WSA 02-2002, Part 1 Section 6.*

(6) The location of maintenance structures is 1 metre upstream of lot boundaries. At a truncated section of a corner lot, maintenance structures are located wholly within the lot.

9.8.8.2 Drops

(1) The dimension of drops through maintenance holes are as indicated on the local government's approved standard drawings.

(2) Maintenance holes receiving discharge from pressure mains are ventilated and coated to prevent corrosion.

(3) Standard maintenance holes are designed to permit entry for the purposes of maintenance and have a minimum depth to invert of 1.5 metres unless otherwise approved to achieve the performance criteria.

(4) In flood plains, waterways and drainage reserves, the finished surface level of maintenance structures is at a height not less than the 10 percent AEP (10 year ARI) flood level.

(5) Where excavation or fill is required at an existing sewer, the Developer is responsible to pay the cost to the local government for -

(a) raising or lowering existing maintenance structures to the new surface level;

(b) raising or lowering existing house connections if required;

(c) providing structural protection to the sewer.

(6) All work to existing sewerage infrastructure will be carried out by local government staff.

9.8.8.3 Covers

(1) Maintenance structures located in private property are to have covers constructed 75mm above finished surface level.

(2) Bolt down covers are required on maintenance holes -

(a) below 1 percent AEP (100 year ARI) flood level;

(b) in parks or reserves;

(c) in all trunk sewers whose diameter is over 375mm.

(3) Concrete filled covers are required in private property.

(4) Cast iron covers are required in all road reserves.

(5) All covers are class D type and marked to indicate that they relate to sewerage usage.

9.8.9 Inspection and Maintenance

(1) Inspection and maintenance requirements will be provided as a condition of engineering approval - refer to Chapter 2 of this Policy - Documentation and Engineering Conditions.

(2) After the Off-Maintenance inspection, the maintenance structure lids are sealed with Compriband or similar material.

(3) Levels are taken confirming the grade of all sewers under roadways prior to the pre-seal inspection.

9.8.10 ExistingSewers

(1) At the applicant's expense, local government staff will make all connections or alterations to local government sewers.

(2) Requests for connection are in writing with adequate details of work required.

(3) The local government reserves the right to refuse to complete the connections until such work has been paid for and accepted On-Maintenance.

(4) Prior to design, the developer is to survey actual levels of existing sewers.

(5) Levels and locations obtained from the local government's As-Constructed sewerage information are unacceptable.

9.8.11 Existing Dwelling Units

(1) Where an unsewered dwelling unit is located on land that is being developed, the Developer is to connect the dwelling unit to the sewer at their cost as part of the developmental work.
(2) The Developer is responsible for the removal of any septic tanks and back filling of the excavation to the satisfaction of the local government.

(3) The Developer is responsible for obtaining the necessary building and drainage permits before commencing work.

(4) The Developer is responsible for providing connection branches for all properties on the route of any extended sewer but is not required to connect any dwelling to the sewer, except by agreement with the local government.

9.8.12 Pumping Stations and Pressure Mains

9.8.12.1 General

(1) Pumping stations and pressure mains are designed in accordance with the *Sewerage Pump Station Code of Australia* (WSA 04 - 2001) and the local government's approved standard drawings.

(2) Pressure mains are a minimum of Class 12 U.P.V.C. pipe unless otherwise authorised by the local government.

(3) Pressure mains should generally be connected to a gravity sewer with a Y junction immediately downstream of a maintenance hole.

(4) A bitumen or concrete surfaced 3 metre wide vehicular access, with standard concrete slab across the footpath is constructed to suitable levels and pavement depth to the approval of the local government.

(5) The access is not constructed in an overland flowpath or below the level of a 1 percent AEP (100-year ARI) storm.

(6) A plan showing design details of the access is included when the pumping station drawings are submitted for approval.

9.8.12.2 Low Lift Pumping Stations

(1) The following requirements apply to low lift pumping stations, in addition to the requirements for pumping stations generally. Low lift submersible type pumping stations may be approved by the local government to suit conditions in which sewers are proposed in flat country. These stations are to conform to the following design standards -

(a) One pump station allowed within each catchment;

(b) Subsequent in line stations accepting pumped sewerage are the standard two-pump type;

(c) The nominal maximum number of tenements served is 70;

(d) Overflow mains discharge to a maintenance hole which has an approved internal anti-corrosive coating, at a maximum distance of 20 metres from the pump station;

(e) The pressure main discharges to the gravity main via an oblique junction, nominally 5 metres downstream from the maintenance hole receiving the overflows;

(f) Maintenance holes within a distance of 100 metres downstream of a pump station have an approved internal anti-corrosive coating;

(g) The pump unit is sized at 6 litres per second with a 100mm-diameter pressure main;

(h) A 150mm-diameter overflow pipe is provided from the pump station to the rising main discharge maintenance hole as indicated on the approved standard drawings;

(i) The finished surface level of the lowest tenements contributing to the pump station is above a hydraulic grade of 1 in 500 calculated from the level of the overflow pipe at the pump station;

(j) The maximum depth of the pump station floor is 6 metres below finished ground level;

(k) One reserve pump and motor unit is supplied and delivered to the local government's depot for every 1 to 3 pumps installed in an estate;

(l) Stations are constructed in accordance with the local government's approved Standard Drawings;

(m) Stations are located within a park or reserve, not within a road reserve, on a site approved by the local government;

(n) An all weather access is provided similar to that required for the standard two-pump type pumping station;

(o) An approved water service is provided.

9.8.12.3 Telemetry Alarm System

(1) New sewerage pump stations constructed in the local government area are to have provision made for connections to the telemetry system as follows -

(a) Construction of a separate cubicle attached to the switchboard for installation of telemetry equipment;

(b) Provision of output terminals in the cubicle to allow for the connection of telemetry equipment;

(c) Payment to the local government of the cost of installation of telemetry equipment.

9.8.12.4 Standby Power

New sewerage pump stations constructed in the local government area are provided with a connection for generators to provide standby power. As connections vary depending on the size of the pump motor, details of the pump motor are made available to the local government, in order that necessary connection details can be provided by the local government to the developer.

Chapter 9 - Electrical Reticulation and Street Lighting

9.9.1 Purpose

(1) The purpose of this chapter of the policy is to -

(a) Set out the information requirements for the preparation and submission of plans and technical reports for the design of electrical reticulation and street lighting works associated with development applications;

(b) Ensure that electrical works and street lighting are designed and constructed effectively and safely and minimises maintenance costs.

9.9.2 Applicabilit y

This chapter applies to all development under the planning scheme that requires the installation of or modification to electrical reticulation or street lighting external to the premises either within the road reserve or other public areas.

9.9.3 General

(1) The Applicant is to appoint a suitably qualified electrical consultant for the design of electrical reticulation and street-lighting who is a Registered Professional Engineer of Queensland (RPEQ).

(2) Design and construction work on Energex's assets is carried out by an Energex approved consultant and contractor. The applicant or consulting Engineer submits certified documentation and drawings to the local government showing Energex and Telstra's acceptance of the proposed design. For -

(a) reconfiguration works, copies of these agreements are forwarded to the local government prior to sealing of the survey plans;

(b) other works, copies are forwarded on completion of the works.

(3) Certificates and As-Constructed certified drawings are supplied to Energex and, where applicable, to the Department of Main Roads on completion of all works.

9.9.4 Electrical Reticulation

9.9.4.1 General Requirements

This chapter should be read in conjunction with specified local government Standard Drawings and the current Energex manuals and policies.

9.9.4.2 Overhead Electrical Reticulation

Overhead power is aligned in accordance with standard drawings R-RSC-9 and R-RSC-10.

9.9.4.3 Underground Electrical Reticulation

(1) General -

(a) underground electricity reticulation is provided in accordance with the Infrastructure Works Code;

(b) the specific requirements of new developments, in particular reconfiguration, are in sections 9.9.4.4 and 9.9.4.5.

9.9.4.4 New Dedicated Roads

For newly dedicated roads, full underground electrical reticulation including consumer service pillars are provided within the road reserve to all lots including adjacent parkland.

9.9.4.5 Existing Dedicated Roads (including Road Widening)

(1) Where overhead electricity reticulation exists along frontage of the development and all the proposed lots are to take access off the existing dedicated road -

(a) the low voltage (240V) and 11kV are converted to underground and all lots supplied underground from consumers' service pillars;

(b) redundant overhead lines and power poles are removed.

(2) Where the overhead electricity reticulation exists along the frontage of the development, but the proposed lots are to take access and have electricity supply from an internal road system, conduits are installed for either the future undergrounding of the existing 11kV component or for new proposed future 11kV.

(3) If the supply for the development is taken from existing overhead mains, then the supply is installed underground from the nearest existing overhead pole at or outside the development boundary. It is unacceptable to install new overhead conductors across the road or extend spans of overhead lines down a footpath to new underground termination poles.

9.9.4.6 Existing Houses/Buildings

Where an existing dwelling/building is to remain within the limits of a development, then any existing overhead electricity and telecommunications service to the building are converted to underground.

9.9.4.7 High Voltage Feeders (33kV and Higher)

All existing conductors of 33kV and higher may remain overhead. However if the developer wishes to remove high voltage feeder lines, the necessary approvals are obtained direct from Energex/Powerlink. New or relocated 33kV or higher systems may be overhead at the discretion of Energex/Powerlink.

9.9.4.8 Spare Conduits

(1) The local government reserves the right to specify spare conduits for future use on half/full width road crossings for the extension of services to/from adjacent existing and future developments.

(2) It is the responsibility of the electrical supplier to ensure that the quantity of conduits installed within the development will also cater for any future mains upgrade -

(a) dedicated Underground Electricity Infrastructure Areas are defined in Maps 1 to 6;

(b) all underground power is designed in accordance with Energex specification, *Underground Residential Distribution* (URD), as amended from time to time;

(c) the quantity of conduits installed within the development will cater for future adjacent developments or mains upgrade;

(d) alignment of infrastructure is in accordance with standard drawings R-RSC-9 and R-RSC-10.

Note -

Where internal lots with narrow access easements are proposed, it is important that future electricity and telecommunication conduits are installed for the full length of the access easement before any concrete driveways are constructed.

9.9.4.9 Road Crossings

(1) Where underground infrastructure is required to cross a road carriageway it is -

(a) preferably at right angles;

(b) in no case less than 45 degrees to the road axis;

(c) located on boundaries alternate to water reticulation crossings;

(2) Electrical crossings are not permitted within the area defined as an intersection under the *Traffic Regulations* unless on an alignment off the projected intersecting property boundary.

9.9.4.10 Pillars

(1) Pillars are provided at all electrical infrastructure entry points and are located adjacent to the common side boundary of private properties;

(2) The location of internal transformers associated with 11kV electrical infrastructure is determined on a case by case basis;

(3) Development involving the dedication of parks provides electrical infrastructure pillars in a park or on the verge of the road reserve adjoining the park to provide power supply for lighting or other services and facilities.

9.9.4.11 Transformers

(1) New transformers are Pad-Mount Transformers (PMT) unless specified otherwise;

(2) Transformers are located in parks, or approved road reserves excised from properties;

(3) Where Pad Mount Transformers are proposed within existing or proposed parkland, the location of the infrastructure is determined based on the following criteria -

(a) having vehicular access at all times;

(b) being inconspicuous;

(c) being clear of all other infrastructure;

(d) being clear from tree canopy overhang and not obscured by other planting;

(e) having a site size that conforms to Energex requirements.

Map 1 - Capalaba - Plan of Dedicated Underground Electrical Reticulation

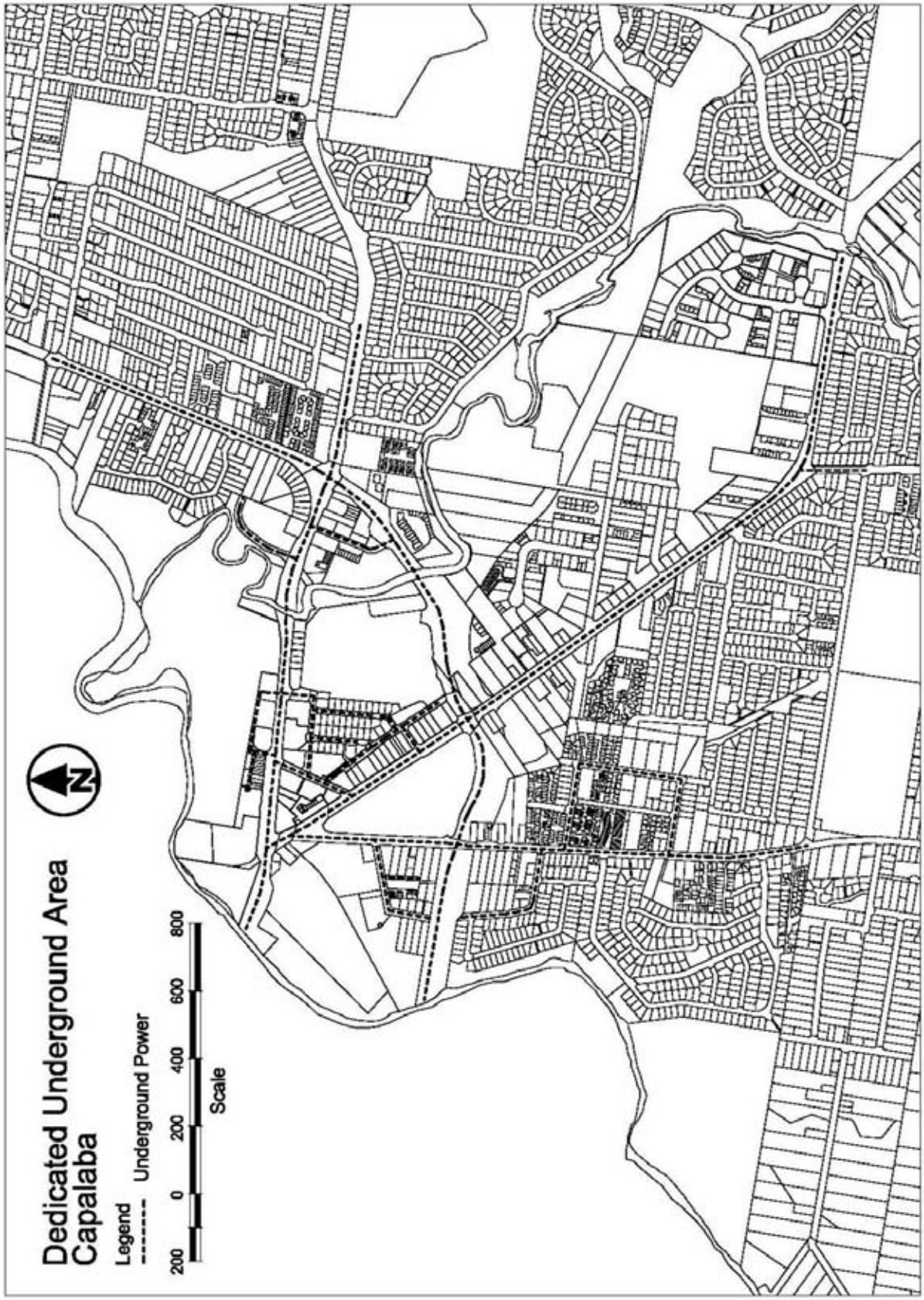

Map 2 - Wellington Point - Plan of Dedicated Underground Electrical Reticulation

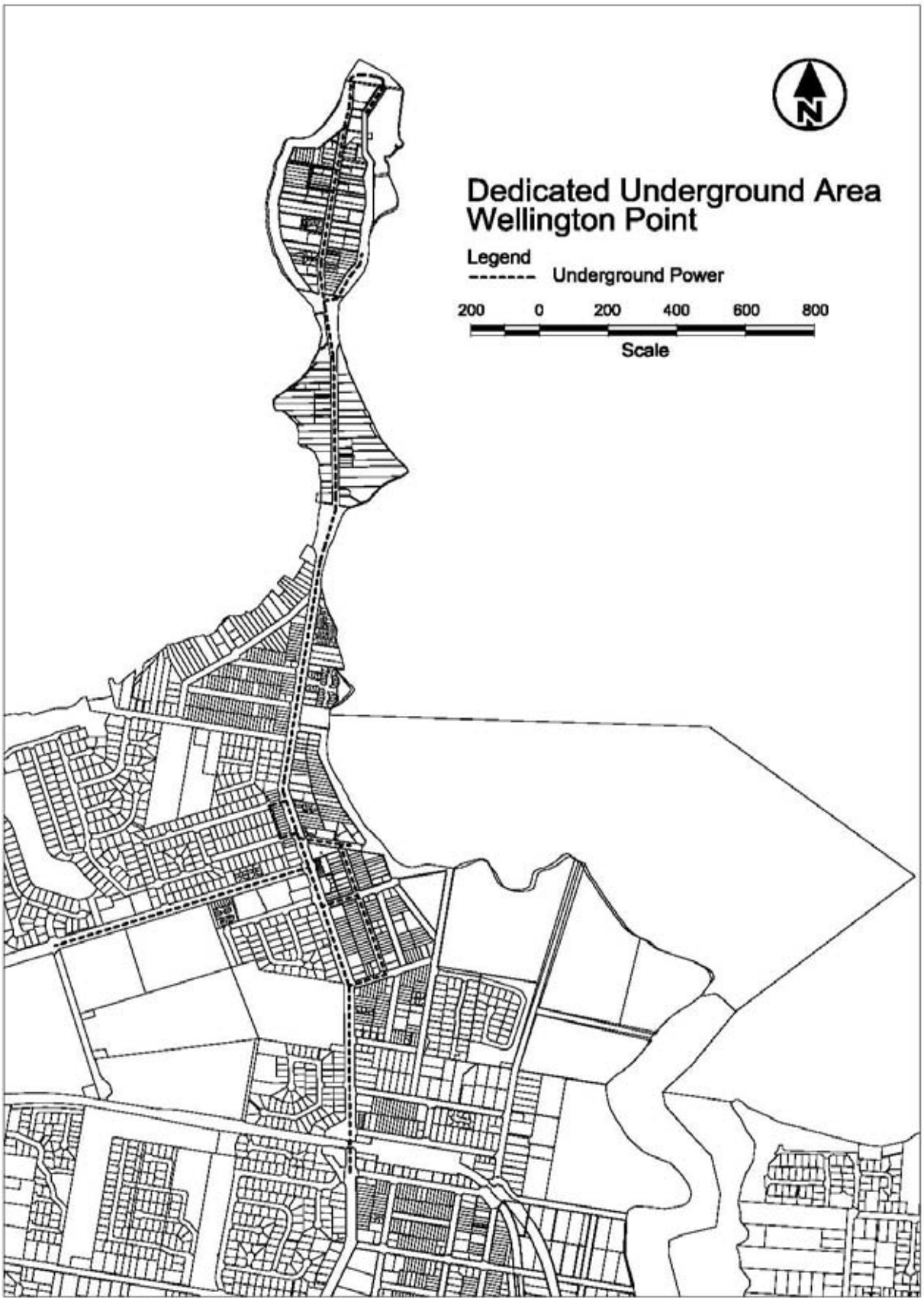

Map 3 - Cleveland - Plan of Dedicated Underground Electrical Reticulation

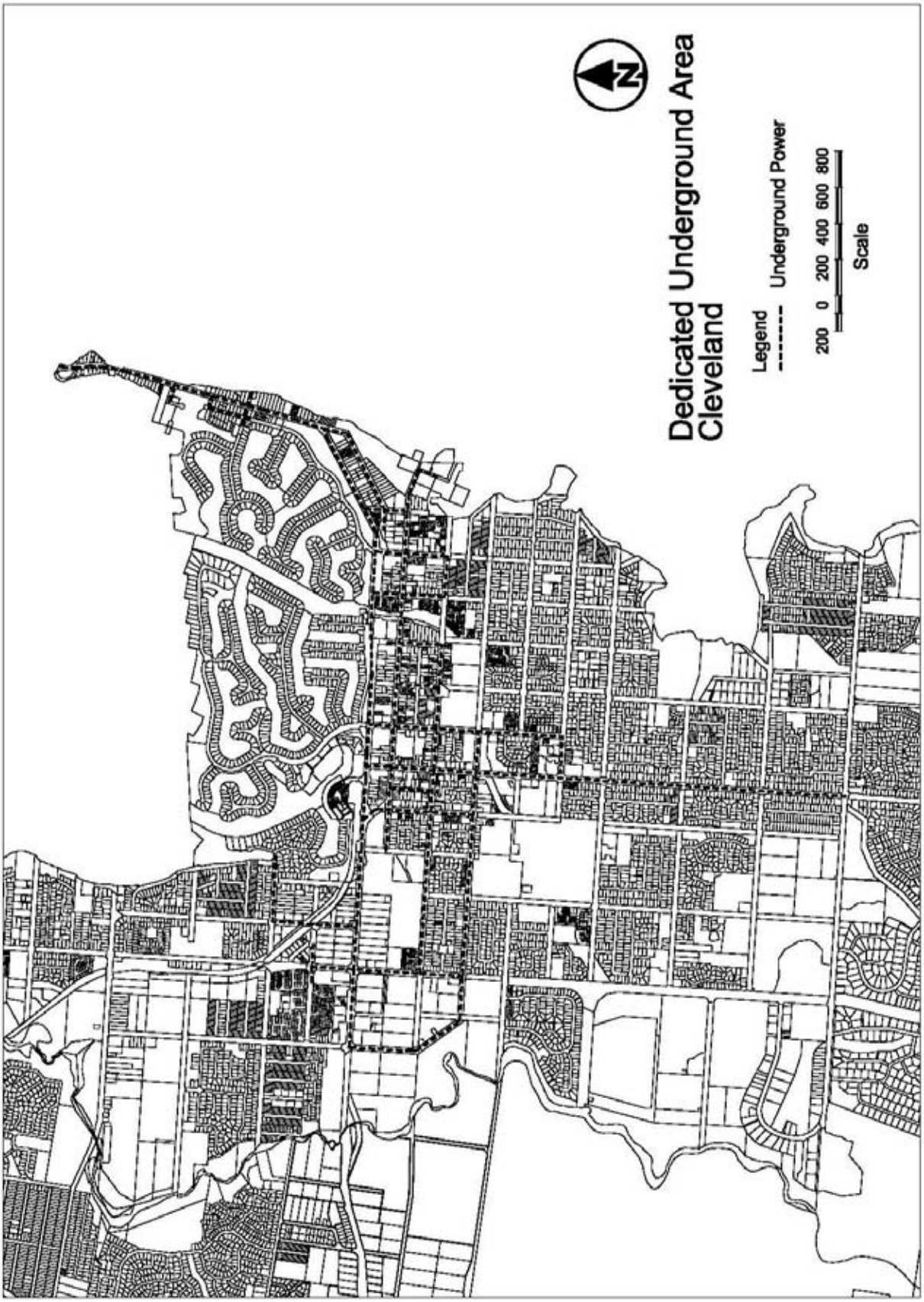

Map 4 - Victoria Point - Plan of Dedicated Underground Electrical Reticulation

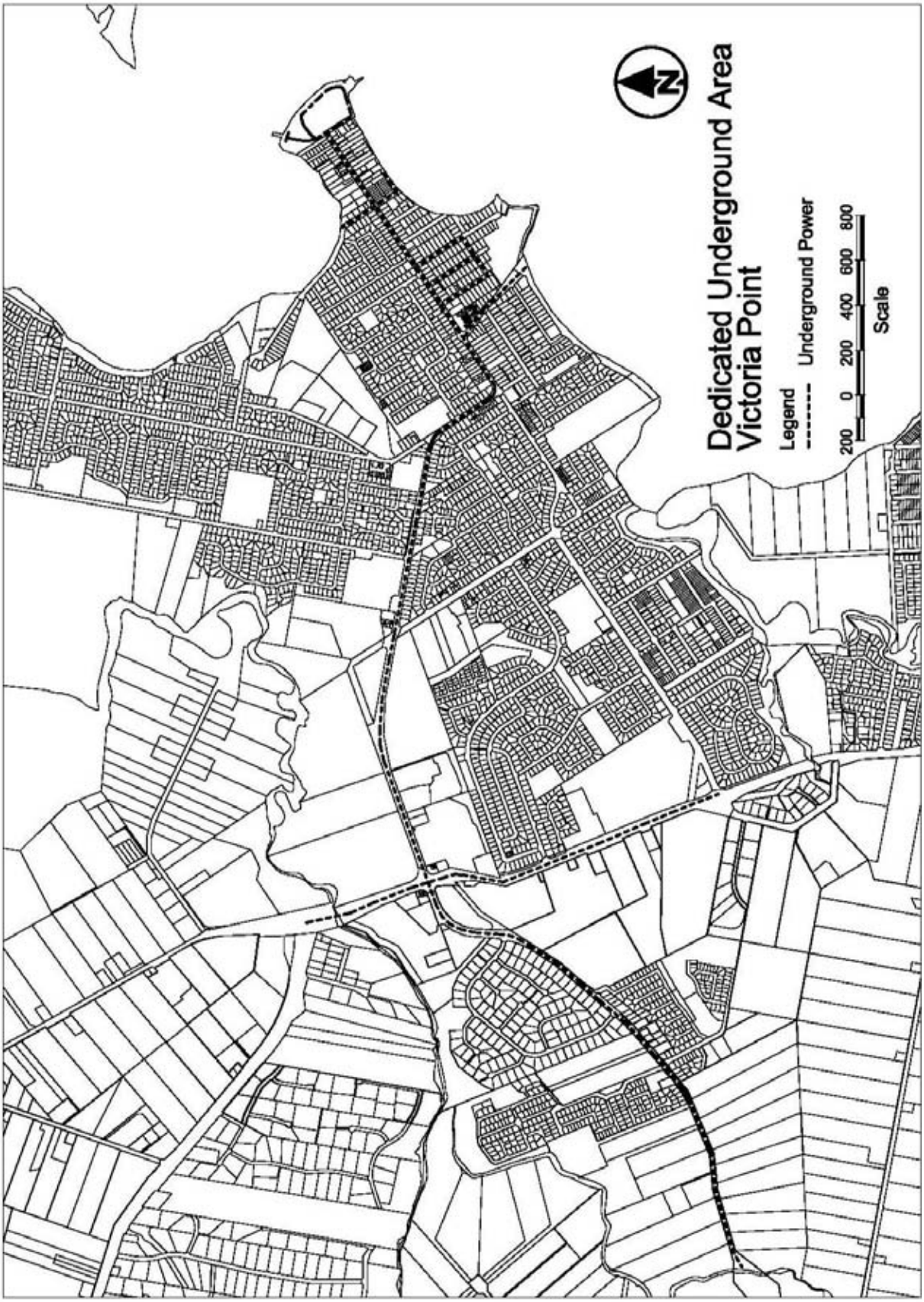

Map 5 - Redland Bay - Plan of Dedicated Underground Electrical Reticulation

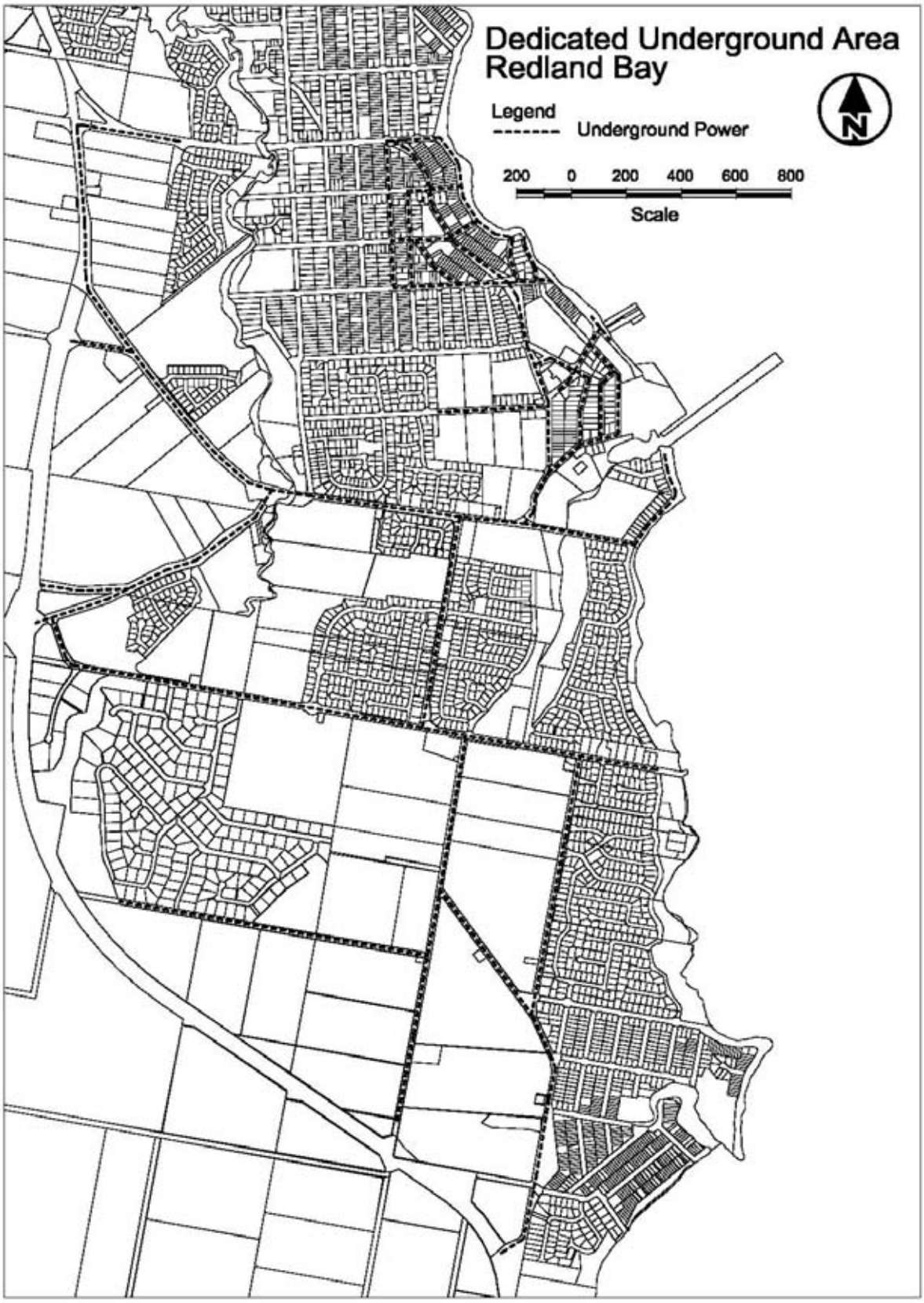

Map 6 - Point Lookout - Plan of Dedicated Underground Electrical Reticulation

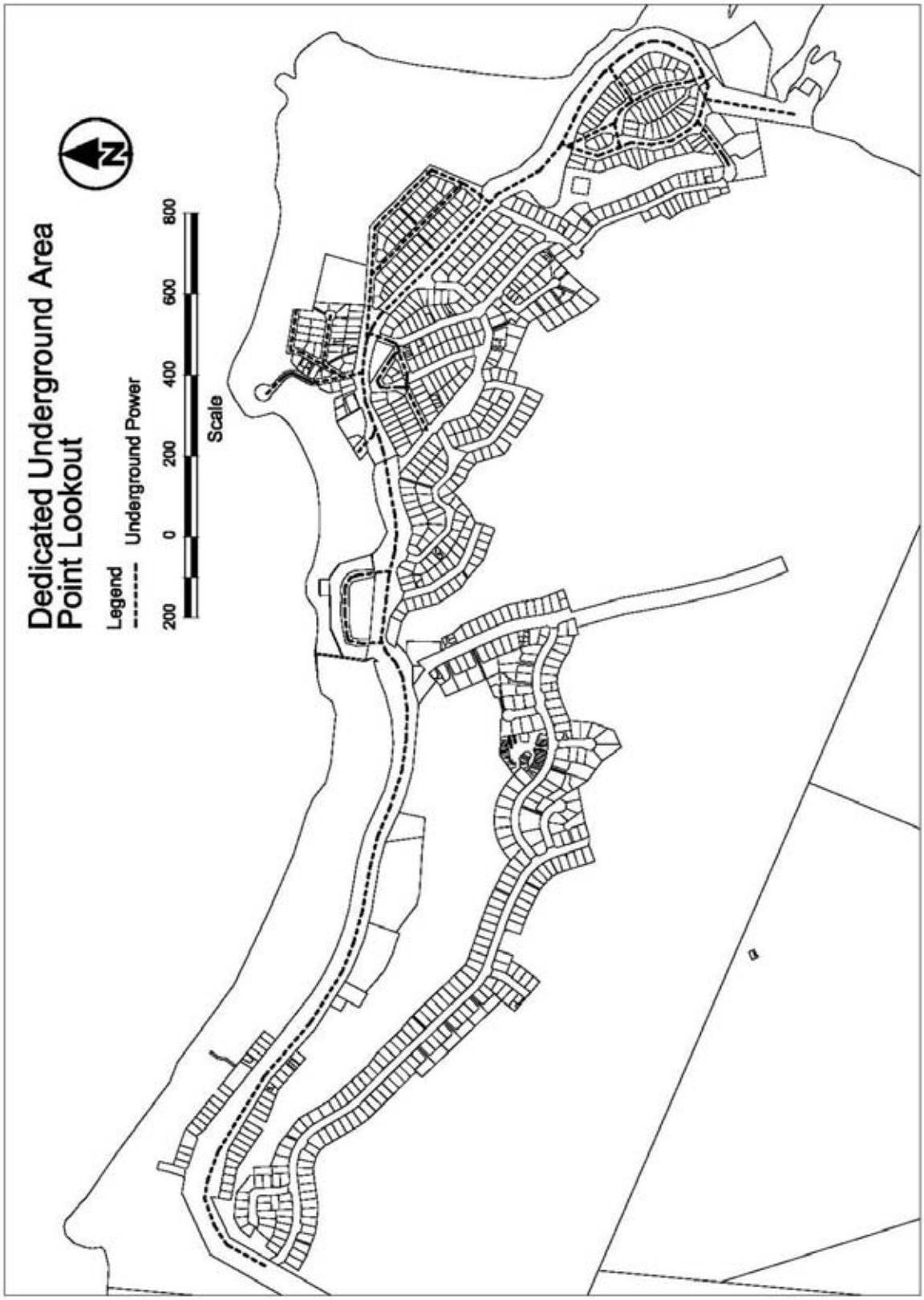

9.9.5 Street Lighting

9.9.5.1 General Requirements

(1) It is the applicant's responsibility to provide street lighting as a condition of development.

(2) The design takes account of the Department of Main Roads and the local government's future planning proposals.

(3) At the time of approval, the local government or Department of Main Roads will nominate the category of street lighting and extent of street lighting required.

(4) As a general rule, street lighting is installed in association with the installation of all new traffic islands and all new road openings to existing roads.

(5) Unless otherwise approved in writing by the Department of Main Roads or the local government, all road lighting installed as a condition of development is Rate 2 Lighting.

9.9.5.2 Relevant Standards

(1) Unless specified otherwise in this chapter or directed by the local government, the detailed design of street lighting and path lighting conforms to the following standards -

(a) *Australian Standard 1158.0: 1997 - Road Lighting - Introduction*;

(b) *AS 1158.1.1: 1997 - Road Lighting (Category V) - Performance and installation design requirements;*

(c) *AS 1158.1.3: 1997 - Road Lighting- Vehicular traffic (Category V) - Performance and installation design requirements*;

(d) *AS 1158.3.1: 1999 - Road Lighting - Pedestrian area (Category P) - Performance and installation design requirements*;

(e) *AS 1158.1: 1986 - SAA Public Lighting Code, Part 1 - Performance and installation design requirements*;

(f) *AS 4282: 1997 - Control of the Obtrusive Effects of Outdoor Lighting*;

(g) *Guide to Traffic Engineering Practice - Part 12 Roadway Lighting (AUSTROADS Publication)*;

(h) *Energex Policies and Standards - Energex Public Lighting Manuals*.

9.9.5.3 Lighting Categories

(1) The lighting categories acceptable to the local government are set out in Table 1. The lighting categories referred to in Australian Standard 1158 are broadly described as follows -

(a) Category V Lighting - lighting applicable to roads on which visual requirements of motorists are dominant such as major traffic routes;

(b) Category B Lighting - lighting which is applicable to roads on which the visual requirements of pedestrians are dominant such as local roads;

(c) Category C Lighting - lighting which is applicable to outdoors public areas, other than roads, where visual requirements of pedestrians are dominant such as outdoor shopping precincts.

Table 1 - Lighting Categories

Road Type	Minimum Reverse Width (metres) (Refer Note[1])	AS 1158 Lighting Category
Access Place	15	B2
Access Street	15	B2
Collector Street	18	B1
Trunk Collector Street	27	V5
Trunk Collector Street (no frontage access)	19	V5
Sub Arterial 2 Lane Undivided (no front access)	20	V3
Sub Arterial 2 Lane Divided (frontage access)	33	V3
Sub Arterial 4 Lane Divided (no frontage access)	33	V3
Industrial Access	20	B2
Industrial Collector	22	B1
Local Area Traffic Management Devices		P
Lane or Pathway	N/A	B2
Cycle paths	N/A	B2
Pedestrian Tunnels (Note[2])	N/A	C1

Notes -

[1] These dimensions are applicable to newly dedicated roads only. Refer Standard Drawing R-RSC-15.
[2] Pedestrian tunnels longer than 25 metres require lighting during daylight hours as well as at night.

9.9.5.4 Lighting Design

(1) The design and construction of street lighting -

(a) is installed prior to accepting roadworks On-Maintenance unless otherwise approved by the Department of Main Roads and/or the local government;

(b) is designed and installed under the direction of an Electrical Engineer registered in Queensland (RPEQ) and experienced in this type of work;

(c) involves the Electrical Engineer coordinating the design with the Civil Engineer responsible for the design of the roadworks;

(d) is submitted to approving authorities through the Civil Engineer;

(e) where traffic signals are being installed in association with a development, the Civil Engineer co-ordinates the design and installation of the street lighting with the local government and the Department of Main Roads where applicable.

(2) The following information is provided to the approving authorities for street lighting -

(a) existing road alignments, property boundaries, locations of existing poles and lights where appropriate;

(b) location of proposed lights and poles, detailing type, bracket size, mounting height and distance between poles;

(c) any physical feature that may affect the design;

(d) possible conflicts with other services;

(e) drawings showing plans of the street lights, using standard DMR or Energex luminaires, cable installations, types, cross-sections and alignments;

(f) certification that the design complies with the previously specified requirements in Clause 9.9.5.2 Relevant Standards; Refer also Chapter 2 - Documentation and General Conditions of this policy.

(3) Where the Department of Main Roads requires street lighting as a condition of development, such as in association with traffic islands or with opening of a new road, the Department of Main Roads may also require conditions similar to the above and/or additional conditions.

9.9.5.5 Street Lighting in Minor Roads

(1) Minor Roads, being an access place, access street, collector street, industrial access and collector streets have lighting designed to conform to the lighting Categories B and C in accordance with *Australian Standard 1158.1: 1986 - Road Lighting - The lighting of urban roads and other public thoroughfares*. Refer to section 9.9.5.3, Table 1 - Lighting Categories.

(2) Lighting of pedestrian refuges and on Local Area Traffic Management (LATM) devices are in accordance with *Australian Standard 1158.3.1: 1999 - Road Lighting - Pedestrian areas; (Category P) Lighting-Performance and installation design requirements*. Refer to section 9.9.5.3, Table 1 - Lighting Categories.

(3) Street lighting is enhanced to achieve, at least, the minimum standards at the following locations -

(a) where the road exists and is identified as Drainage Problem;

(b) at intersections, sharp bends, culs-de-sac, local shops, bus stops and any other location of potential hazard or frequented by pedestrians;

(4) For Low Density Residential, Park Residential, Rural Non-Urban, Environmental Protection or Conservation Zones where Table 1 light categories do not apply, one street light is provided -

(a) for every five (5) lots; or

(b) at a maximum spacing of 120 metres.

9.9.5.6 Street Lighting on Major Roads and at Intersections

(1) Major roads are Trunk Collector, Sub-Arterial and Arterial. Refer standard drawing R-RSC-15.

(2) On roads under the control of the Department of Main Roads, the design complies with all current requirements of the Department of Main Roads.

(3) Street lighting is installed on arterial roads in conjunction with or prior to the installation of improvements such as traffic islands or roundabouts. It is important that systems be developed so as to avoid the possibility of hazardous situations occurring during the construction of external road works through time constraints making it difficult for the street lighting installation to meet the required deadlines.

9.9.5.7 Lighting in Parks and on Pedestrian and Bicycle Paths

(1) Lighting requirements for parks are determined on a case by case basis.

(2) Street lighting is provided adjacent to all parks.

(3) Pedestrian and bicycle paths are lit using -

(a) vandal resistant bollard lights to minimise obtrusive lighting where situated adjacent to residential properties. Raylinc BL70-CSV-CB70W 70w HPS or equivalent is acceptable;

(b) pole mounted luminaires such as Nostalgia or similar Energex Rate 2 luminaires may be used in other situations where obtrusive lighting is of no concern.

Note -

Energex Rate 2 luminaires are to have vehicular access to the installations at all times.

(4) Lights are located at both ends of paths and at intervals along the path in accordance with an approved design or as agreed to by the local government.

(5) The location of lighting is such that access for people with a disability is maintained.

(6) Maintenance vehicle access is maintained.

9.9.5.8 Lighting in Community Title Schemes

(1) Where involving public or private roads, street lighting is provided in accordance with the requirements for Minor Roads.

(2) Where involving internal accessways -

(a) a street lighting plan is submitted as part of the development application;

(b) the minimum requirement is the provision of bollard lights adjacent to internal accessways, pedestrian and vehicle entry points and pathways.

9.9.5.9 Street Light Pole Alignment

(1) Street light poles are located at common side property boundaries.

(2) On standard width verges being less than 4 metres, pole and conduit alignment are in accordance with Standard Drawings R-RSC-9 and R-RSC-10.

(3) On verges exceeding 4 metres width, pole alignment is 1.4 metres behind the lip of the channel.

(4) Street trees are not planted closer than 7 metres from existing or future street light pole locations.

(5) In locations where the preferred alignment is not achievable, the alignment will be determined by the local government.

(6) Street light poles are not located at the same side boundaries as fire hydrants, or on truncated boundaries.

(7) Placement of the street light poles on the tangent point of kerb and channel return is subject to the approval of the local government.

Diagram 1 - Unsuitable street light pole locations

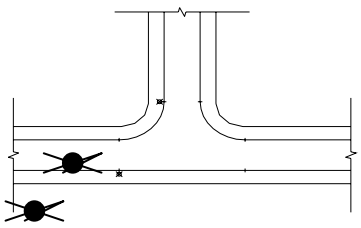

Street light poles are not located in these positions

9.9.5.10 Street Light Luminaires

(1) M50 luminaires are preferred; however an S70 may be permitted if considered practical by an Electrical Engineer.

(2) Fluorescent lighting and opal sphere luminaires are not used.

(3) All luminaires conform to the Energex program of rationalisation of street light luminaires in order to avoid high maintenance costs when luminaires require replacement.

(4) New luminaires and brackets are the same or of similar appearance to those in adjacent existing developments.

(5) Major luminaires are of the aeroscreen type.

(6) Major roads luminaires are high pressure sodium vapour lamps.

(7) Minor road luminaires are not aeroscreened except as approved in such locations as pathways.

(8) Post-top luminaires for decorative purposes are not used except where considered appropriate by the local government on B2 lighting category roads - refer Table 1.

(9) Subject to the requirements of Energex and the Department of Main Roads, outreach brackets for luminaires are 1.5 metres minimum length except on pathways, where the outreach may be 0.5 metres.

9.9.5.11 Street Light Materials

(1) Design and construction of street light materials require Energex approval and where applicable, the Department of Main Roads.

(2) Theme street lights or the use of alternative street light materials where designed as part of a streetscape, will be considered on their merits provided they are acceptable to Energex as a Rate 2 lighting installation.

(3) All new street light poles are base plate mounted steel poles and where practicable supplied through underground conduits unless otherwise approved by the Department of Main Roads and the local government.

(4) In the case of Department of Main Road's infrastructure, the type and location of luminaires complies with latest requirements of Department of Main Roads.

(5) Frangible poles are required in certain circumstances - refer to the requirements of Department of Main Roads and Energex Manuals.

9.9.5.12 Approving Authorities

(1) Works designed by Energex are submitted to the local government and where required, to the Department of Main Roads for examination and inspection.

(2) Works designed by Electrical and Civil Engineers are submitted to Energex and the local government for approval, and where relevant, to the Department of Main Roads.

Chapter 10 - Parks and Open Space

9.10.1 Purpose

The purpose of this chapter of the policy is to set out the requirements for the preparation and submission of reports associated with development applications under the planning scheme involving parks and open space.

9.10.2 Applicability

This chapter of the policy applies to all development applications under the planning scheme for land proposed for use as a park and open space.

9.10.3 General

(1) The provision of open space or parks set out in this policy is based on the *Redland Shire Council Open Space Plan 2004 - 2016.*

(2) Open space standards of provision were established through the *Open Space Plan 2004 - 2016* to ensure the community has sufficient suitable land set aside for recreational and sport uses till 2016 and incorporate -

(a) park definitions;

(b) park function;

(c) land characteristics;

(d) outdoor equipment and public facilities.

(3) This chapter of the policy and Chapter 11 - Landscaping should be referenced in conjunction with each other.

(4) Developments will require the applicant to provide land and/or a monetary contribution for open space. Refer to Chapter 5 of Planning Scheme Policy 3 - Contributions and Security Bonding.

9.10.4 Definitions and Functions of Parks and Open Spaces

(1) Parks and open space are defined by -

(a) the catchment they serve;

(b) the distance traveled by the user to the park or open space;

(c) the function they perform.

(2) Definitions for parks are -

(a) Local Park -

(i) is a park for the people of a residential neighbourhood within 500 - 800 metres safe walking distance of 90 - 95 percent of dwellings served. The size of local parks range from 2000m^2 to 2 hectares, as determined by the local government based on suburb by suburb gap assessment. It provides recreation opportunities closest to home primarily for young children. Activity is usually of an informal nature. The park may have a swing set and seating and often a kick about space. Good supervision and safety considerations

are essential as these parks are often small with close street frontage and adjoining residences.

(b) District Park -

(i) is a larger park, being 2 to 10 hectares in size. A district park serves 90 - 95 percent of dwellings within 5 kilometres. A district park typically provides a more comprehensive range of facilities including sporting fields, clubhouse, public amenities, car parking, playground equipment, BMX, skate parks, dog off leash areas, basketball court, BBQ and picnic facilities and sometimes access to Moreton Bay. It would be expected that people would drive to a district park and stay longer due to the variety of activities that can be undertaken. These are great parks for events, gatherings, family parties and celebrations.

(c) Regional Park -

(i) is land which is regionally significant for an open space function (*Open Space for Sport and Recreation - Planning Principles and Implementation Notes (*Department of Local Government, Planning, Sport and Recreation, 2003);

(ii) a regional recreation park is a tract of land, ranging from 5 to 20 hectares in size, that is intended to serve the 100 percent of communities who live within 10 kilometres. In the Redlands regional parks are often not large but are situated besides Moreton Bay, often with direct water access via the beach or a boat ramp. Visitors to these parks come from all over South-East Queensland and some parks attract interstate and international visitors. The recreation, leisure and visual amenity of these parks is highly desirable. Facility quality and quantity should reflect the high visitation numbers and standard that the City wants to present to the rest of the region and interstate;

(iii) regional sport parks are high quality facilities, developed in the Redlands for a specific code. Regional sporting venues in the City cater for baseball, softball, AFL, cricket and netball, amongst others. Competitors travel long distances to train and compete at these parks. Lighting, field and clubhouse facilities usually reflect the standard of competition.

(3) Open space perform various functions. These are identified in Table 1 - Park Functions.

Table 1 - Park Functions

Function	Definition
Informal	(1) Open space with no embellishments/dedicated infrastructure as per Table 3 - Desired Standards for Park Equipment and Furniture. Generally provided for drainage purposes but may be used for linear walking trails, casual games. (2) Provides a "land bank" for future upgrades to recreational or sport use, if site characteristics are appropriate. (3) Informal open space is also ideal for providing visual breaks in the urban landscape or linking other open space nodes. An example of the latter is to provide a pedestrian or cycle access corridor through a residential area between a district sport park and a regional foreshore park.
Recreation	Parks at all catchment levels that are dedicated to active and passive leisure and play. Embellishment infrastructure as per Table 3 - Desired Standards for Park Equipment and Furniture.
Sport	District and regional parks with embellishments and dedicated sporting infrastructure as per Table 3 - Desired Standards for Park Equipment and Furniture. Primarily used for sports training and competitive fixtures, but also available for casual use by the public.
Conservation	(1) Open space dedicated to the protection and retention / rehabilitation / conservation of - (a) rare, threatened or otherwise significant species; (b) significant communities or regional ecosystem types; (c) habitat for rare, threatened or otherwise significant species; (d) physical, such as water quality and quantity, and ecological processes associated with riparian and coastal systems. (2) May provide for nature based and outdoor recreational opportunities.

9.10.5 Open Space Land Characteristics

(1) The land characteristics of open space are based on their function, accessibility and expected facilities.

(2) Table 2 identifies minimum access, frontage, visibility and surveillance, shape, slope and buffers of land for open space.

Table 2 - Land Description

Open Space Type	Access	Frontage Visibility/ Surveillance	Shape	Slope	Buffering / Setback
Local Recreation	Via a safe 5-10 minute walk for 90-95 percent of residents within 500-800 metres along local footpath or a 10 metres wide lane	50 percent frontage to local road 100 percent of embellishments are visible from access point	Regular, no less than 40 metres wide	Not greater than 20 percent. Allows safe access, including disabled, to all embellishments. Kickabout/ informal play areas may be gently sloped/ rolling to allow safe ball play.	Land identified on Flood Prone, Storm Tide and Drainage Constrained Land, Habitat Protection or Waterways, Wetlands and Moreton Bay Overlay achieve the requirements of the relevant Overlay Code, including any setbacks or buffers.
District Recreation	Via a 30-45 minute walk, 15-20 minute ride or 10 minute drive along local and major roads for 90-95 percent of residents within 2.5-5 kilometres	30 percent frontage to major road preferred	Generally regular. Linear foreshore parks no less than 100 metres wide		
Regional Recreation	1-2 hour walk, 30-60 minute ride along local roads and dedicated cycle/ walkways along major roads or 15-20 minute drive along local and major roads for all residents	30 percent frontage to major road preferred and 20 percent to local road	Generally regular. May occur as large nodes of areas greater than 100 metres wide on linear foreshore		
District Sports	30-45 minute walk, 15-20 minute ride along local roads and dedicated cycle/ walkways along major roads or 10 minutes drive along local and major roads for 90-95 percent of residents within 2.5-5 kilometres	30 percent frontage to major road preferred and 30 percent to local road	Regular to maximise the number and layout of playing fields	A minimum of 60 percent of the park is sloped less than 1 in 100. to minimise cut and fill for playing fields	
Regional Sports	1-2 hour walk, 30-60 minute ride along local roads and dedicated cycle/ walkways along major roads or 15-20 minute drive along local and major roads for all residents	30 percent frontage to major road preferred and 20 percent to local road			

9.10.6 Specific Park Characteristics

(1) Waterways and Foreshore Land -

(a) The local government requires the dedication of land for open space purposes along all waterways, wetlands, natural drainage lines and foreshores to protect environmental processes and natural drainage systems and facilitate public access.

(b) The extent of such dedication is determined having regard to -

(i) land subject to tide inundation as a result of the highest astronomical tide;
(ii) land subject to 1 percent AEP storm tide inundation as the result of storm and wind and the greenhouse effect;

(iii) land subject to flooding from flows in adjoining waterways;
(iv) steep land adjoining foreshores or waterways which is likely to be unsuitable for development;

(c) The local government requires a road between the open space and development. The width of open space is the greater of the following -

(i) ten metres above 2.4 metres AHD where the slope is less than 1 on 8; or
(ii) as required above 2.4 metres AHD to achieve a distance of 10 metres that is of a slope that does not exceed 1 in 8; or
(iii) where the land contains a cliff, bank or similar topographical feature, 10 metres landward of that feature;

(d) The area dedicated will be determined as follows -

(i) an approved flood study will be used to determine the limits of flooding at a number of frequencies for a fully developed catchment;
(ii) the local government will not permit the use of land subject to flooding at an average frequency of 1 percent AEP as determined by an approved flood study;
(iii) the local government will require the dedication for drainage purposes of all land subject to flooding at an average frequency of 1 percent AEP as determined by an approved flood study.

(2) Passive Recreation Areas, Linear Parks and Environmental Corridors -

(a) Where the local government determines that the use of open space is for passive recreation, multi-purpose links, ecological corridors or similar, the following operations are carried out before the land is dedicated to the local government -

(i) the land is inspected by local government staff for compliance with these requirements;
(ii) a determination is made regarding whether any drainage is required to be constructed within the proposed open space;
(iii) a determination is made regarding whether any weeds or vegetation needs to be trimmed or removed;
(iv) a determination is made regarding whether pathways and/or cycle paths are constructed within the proposed open space;
(v) where it is determined that works need to be carried out, such works are completed or bonded for completion before the local government signs the plan of survey or issues the development permit.

(3) Playing Fields and Sports Grounds -

(a) Where the local government determines that the use of such land is for playing or sports fields, the following operations are carried out before the land is dedicated to the local government -

(i) the land is leveled and drained to an approved plan to make the land suitable for the proposed use and topsoiled and grassed to an approved specification;
(ii) the boundaries of the open space to any constructed road is fenced with an approved log barrier or post fence;
(iii) the road frontage is constructed in accordance with local government standards;
(iv) provision is made for the site to be serviced with water and sewerage at approved locations;
(v) landscaping is as determined by the local government;

(b) In determining the area of land to be dedicated and the value of work to be carried out by the applicant the local government will consider the limitations imposed by IPA and this policy.

(4) Children's Playgrounds -

(a) Where the local government indicates a playground is required within the development the land to be dedicated is of a size not less than 3000m^2, including dedication from adjoining developments and designed for informal play in a safe environment and passive recreation.

(b) Where the local government determines that the use of such land is for a children's playground, the following operations are carried out before the land is dedicated to the local government -
   (i) the land is shaped and drained to an approved plan to make the land suitable for the proposed use and topsoiled and landscaped to an approved specification;
   (ii) the boundaries of the open space to any constructed road is fenced with an approved log barrier or post fence;
   (iii) the road frontage is constructed in accordance with local government standards;
   (iv) provision is made for the site to be serviced with water;
   (v) playground equipment is installed in accordance with an agreed specification;

(c) In determining the area of land to be dedicated as open space and the value of work to be carried out by the applicant the local government will consider the limitations imposed by IPA and this policy.

9.10.7 Outdoor Equipment and Public Facilities

9.10.7.1 General

(1) Table 3 - Desired Standards for Park Equipment and Furniture identifies the local government standards for a range of park requirements.

Table 3 - Desired Standards for Park Equipment and Furniture

	Local Recreation	District Recreation	District Sports	Regional Recreation	Regional Sports	Informal
BBQ	none	Optional with optional shelter	none	As per Masterplan	none	none
Waste Bins	none	Wheelie bin and enclosure, Including recycle bin as demand dictates	Minimum - 1 wheelie bin, 1 recycle bin and enclosure	Minimum - 1 wheelie bin, 1 recycle bin and enclosure per BBQ	none	none
Change Rooms	none	none	In clubhouse	1 male 1 female on foreshore parks	In clubhouse	none
Playing Field	Kick-about area optional	Kick-about area taking into account other features	2-10ha Refer to sport/code regulations. Masterplan required	Kick-about area taking into account other features Masterplan required	5-20ha Refer to sport/code regulations Masterplan required	If area allows
Playscape	No provision unless locational circumstances dictate otherwise maximum 1 double swing	Swing, slide, play deck, or designed playscape, shade	Swing, slide, play deck, shade	Design required	Swing, slide, play deck, shade	none
Seats	Maximum - 2	Minimum - 2	Minimum - 2 at playscape Grandstands as per sporting standards	Minimum - 2 at playscape, 1 per 100 lineal metre, or as per Masterplan	Minimum - 2 at playscape Others as per Masterplan Grandstands as per sporting standards and/or Masterplan	none

	Local Recreation	District Recreation	District Sports	Regional Recreation	Regional Sports	Informal
Shade	Retain/plant trees Refer to local government *Vegetation Enhancement Strategy* (VES)	Retain/plant trees or a shade port Refer to local government VES	Retain/plant trees, perimeter planting, club house, and/or shade structures Refer to local government VES	Retain/plant trees Refer to Masterplan Refer to local government VES	Retain/plant trees, perimeter planting, club house, and/or shade structures Refer to Masterplan Refer to local government VES	Retain/plant trees Refer to local government VES
Shelters	none	1 shelter with a 6m x 5.5m roof area with appropriate seats and tables	1 shelter with a 6m x 5.5m roof area with appropriate seats and tables	Maximum - 3 per BBQ, shelter with a 4m x 4m roof area, otherwise as per Masterplan	As per sporting requirements or Masterplan	none
Signage	Refer to local government signage manual name/ ordinance	Refer to local government signage manual name/ ordinance	Refer to local government signage manual name/ ordinance, infrastructure	Refer to local government signage manual name/ ordinance, infrastructure interpretive. Refer to Masterplan	Refer to local government signage manual name/ ordinance, infrastructure interpretive. Refer to Masterplan	Parks ordinance
Showers	none	Open/external where swimming occurs in foreshore parks	In clubhouse	Open/external where swimming occurs in foreshore parks	In clubhouse	none
Soft fall	No provision - unless double swing set installed - then sand to Australian Standard and playscape manufacturer's specification. Rubber under high wear areas	Sand to Australian Standard and playscape manufacturer's specification Rubber under high wear areas				none
Soft fall Edging	No provision - unless double swing set installed - then turfed earth mound	Turfed earth mound				none
Table	none	Minimum - 2	Minimum - 2 or as per Masterplan			none
Toilets	none	1 unisex disabled cubicle	2 unisex cubicles, and or clubhouse	As per Masterplan	4 unisex cubicles, and or clubhouse	none
Walking/ Cycling	Optional play element or as commuter/pedestrian/cycle access path as per Pedestrian and Cycle Strategy	Optional circuit or linear with links to regional network as per Pedestrian and Cycle Strategy		Circuit or linear with links to regional network as per Pedestrian and Cycle Strategy		As per Pedestrian and Cycle Strategy

	Local Recreation	District Recreation	District Sports	Regional Recreation	Regional Sports	Informal
Water	Hose taps, and bubblers					none
Landscaping/Turf	Trees and shrubs per VES, Trees maintained along CPTED (Crime Prevention Through Environmental Design) principles where required Turf 70 percent cover excluding retained native vegetation and soft fall Turf to comprise of either *Pennistetum clandestinum* (kikuyu) for foreshore parks or *Stenotaphrum secundatum cvv. Palmetto* (Buffalo) for non foreshore areas	Trees and shrubs per VES, Trees maintained along CPTED principles where required Turf 100 percent cover excluding soft fall, garden beds and retained native vegetation Turf to comprise of either *Pennistetum clandestinum* (Kikuyu) for foreshore parks or *Stenotaphrum secundatum cvv. Palmetto* (Buffalo) for non foreshore areas	Trees and shrubs per VES, Trees maintained along CPTED principles where required Turf 100 percent cover excluding soft fall, garden beds and retained native vegetation Playing field to sport/code specifications Turf to comprise of *Pennistetum clandestinum* (Kikuyu)	Trees and shrubs per VES, Trees maintained along CPTED principles where required Turf 100 percent cover excluding soft fall, garden beds and retained native vegetation Formal landscape design and elements Turf to comprise of either *Pennistetum clandestinum* (Kikuyu) for foreshore parks or *Stenotaphrum secundatum cvv. Palmetto* (Buffalo) for non foreshore areas	Trees and shrubs per VES, Trees maintained along CPTED principles where required Turf 100 percent cover excluding soft fall, garden beds and retained native vegetation Playing field to sport/code specifications Turf to comprise of *Pennistetum clandestinum* (Kikuyu)	Optional turf to comprise *Pennistetum Clandestinum* (Kikuyu) for foreshore parks or *Stenotaphrum secundatum cvv. Palmetto* (Buffalo) for non foreshore areas

9.10.7.2 Picnic Nodes

(1) The type of picnic node provided in a park is consistent with the park type and significance or any unique characteristics established during the park design and assessment process.

(2) Picnic nodes are located at attractive and accessible locations in local, district and regional parks, as approved by the local government.

(3) Picnic nodes in parks are located, designed and constructed in accordance with relevant Australian Standards and the following general requirements -

(a) locate at focal features, adjoining features or at places of special interest;

(b) located in accordance with the approved landscape plan;

(c) they complement and enhance other recreational opportunities in the park;

(d) they have accessible pedestrian paths from adjoining car parks and roads;

(e) they have vehicular access for cleaning and maintenance purposes;

(f) the infrastructure incorporated in picnic nodes is readily maintainable and approved by the local government;

(g) alternative technology such as solar energy and rainwater harvesting may be used where reticulated water and electricity supply is unavailable.

9.10.7.3 Park Furniture

(1) All park furniture is designed, constructed and located in accordance with relevant Australian Standards, the approved landscape plan and the following principles -

(a) ensure park furniture complements and enhances other recreation opportunities in the park;

(b) provide a continuous accessible pedestrian path of travel to furniture;

(c) ensure park furniture is readily maintainable and approved by the local government;

(d) use of alternative technology where appropriate such as durable recycled materials is acceptable;

(e) furniture is only provided in accordance with Table 3 - Desired Standards for Park Equipment and Furniture.

9.10.7.4 Seats

(1) Seats are located in areas with interesting outlooks and where they can obtain maximum shade.

(2) Seats are provided in close proximity to playgrounds or active recreation nodes, around sports fields, at viewpoints and at resting points along paths.

(3) Seats are constructed on a concrete pad.

9.10.7.5 Picnic Shelters

A covered picnic shelter may be provided in conjunction with a playground or other activity space. Refer also to picnic node notes above for further details.

9.10.7.6 Waste Bins

(1) Waste bins are provided at a rate identified in Table 3 - Desired Standards for Park Equipment Furniture.

(2) In district and regional parks both general refuse and recycle bins are provided in fire proof wheelie bin enclosures.

(3) Where practicable, bins are located near a road or the perimeter of the park where they can be serviced without the need to drive the refuse collection truck into the park.

(4) Bins should be located near BBQ facilities.

(5) Provide dog refuse bins in regional and district level parks and adjacent to walking trails.

9.10.7.7 Barbeques

(1) Barbeques are provided only in district and regional parks where the need for the facility can be demonstrated.

(2) Barbeques are generally provided as part of a picnic node and may be covered by a pergola.

(3) Barbeques are only electric.

9.10.7.8 Drinking Bubblers and Fountains

(1) Drinking bubblers and fountains are provided in all categories of parks near picnic nodes, playgrounds, BBQ areas or pathways.

(2) Drinking bubblers and fountains are also required near active recreation and sporting nodes and dog off leash areas where visitor use is high.

(3) Drinking fountains are connected into the main sewerage system in accordance with the *Plumbing and Drainage Act 2002* and Australian Standards.

9.10.7.9 Playground Equipment

(1) Playground equipment is desirable in all categories of parks. Refer to Table 3 - Desired Standards for Park Equipment and Furniture, for what is allowable in different park categories.

(2) Playground equipment in a district or regional park is subject to prior approval of the local government through the presentation of a landscape masterplan that incorporates the playground.

(3) It is necessary that playground equipment design and construction conforms to *Australian Standard AS/NZS 4486.1:1997 - Playground and playground equipment - Development, installation, inspection, maintenance and operation,* and *Australian Standard AS/NZS 4422:1996 - Playground surfacing - specification, requirements and test methods*.

9.10.7.10 Shade Provision

(1) Please refer to Table 3 - Desired Standards for Park Equipment and Furniture for details on shade provision that is preferred in each category of park.

(2) Shade ports, not sails, can be provided over play equipment in local, district and regional parks. They are structures which are offset to the north and west of the play elements in order to maximise the shade benefits.

(3) The structure is vandal resistant, meaning it is not able to be climbed on, burnt, torn, ripped or stolen.

(4) The roof is not accessible by persons at any point, particularly when standing on the highest part of the playground equipment or furniture.

(5) Shade structures are certified as designed and constructed in accordance with the relevant Australian Standards and the *Building Code of Australia* by a Registered Professional Engineer Queensland (RPEQ).

(6) Approved tree species are planted where appropriate to complement the shade port and surrounding infrastructures, such as seats and tables, in order to ultimately replace the need for shade structures.

(7) With approval from the local government, mature trees may be used in lieu of a shade port.

9.10.7.11 Public Toilets

(1) Toilets are only provided in district and regional recreation and sporting parks. Refer to Table 3 - Desired Standards for Park Equipment and Furniture, for different park categories.

(2) Public toilet buildings in parks are designed, located and constructed to conform with Crime Prevention through Environmental Design (CPTED) principles, relevant Australian Standards, the *Building Code of Australia* and in accordance with the following principles -

(a) ensure infrastructure in toilet blocks is approved by the local government and is easily maintained;

(b) the toilet block is sited -
- (i) to avoid nuisance to neighbours;
- (ii) within reasonable proximity to a car park or other demand source;
- (iii) on suitable terrain to facilitate an accessible path of travel;
- (iv) convenient access is provided for the elderly and disabled to the toilet facility and into at least one cubical;
- (v) in close proximity to a road, gate or internal maintenance access for servicing;
- (vi) where casual surveillance is possible from surrounding streets or other sites with frequent public use;

(c) where sewerage reticulation is unavailable and the site is unobtrusive to the landscape alternative technologies such as composting toilets, solar energy and rainwater harvesting may be approved by the local government.

9.10.8 Selective Clearing and Levelling

(1) Should clearing of part or all the proposed park areas be required by the local government, the applicant is to selectively clear and level such areas to the extent required and as directed by the local government.

(2) No clearing of vegetation is carried out in proposed park areas before a local government representative has inspected the site and approved such works.

(3) No filling is placed in parks except for re-profiling of existing dam/s, filling of minor depressions or, as a batter to approved roadworks.

(4) Proposed park areas are leveled when directed by the local government to provide a final landform suitable for ease of maintenance and practical use by the public.

9.10.9 Earthworks

(1) Earthworks for sports oval construction is to include stock piling of topsoil and cut and fill operations to provide a 1 in 80 cross-fall on playing areas, 1 in 6 maximum batter slopes, catch drains and scour protection, all to the satisfaction of the local government.

(2) Where the local government requires the applicant to fill parkland, sufficient topsoil is provided in order to -

(a) support the growth of flora that is compatible with the proposed use of the parkland;

(b) minimise the effects of gases, minerals, and salts in the underlying layers of earth, whether these are naturally occurring or imported.

9.10.10 Topsoiling and Grassing

(1) Turf grass used within the parkland areas is cut from a weed free environment and is to have no viable weed seed within the turf grass.

(2) Seventy-five (75) mm compacted thickness of approved topsoil is provided over all disturbed areas within parks, to the satisfaction of the local government. Such areas are grass seeded, fertilised, watered regularly, and maintained for a minimum period of twelve (12) months subject to the satisfactory establishment of between 70 percent and 100 percent grass cover in each 10 square metres of disturbed park area depending on parkland classification.

9.10.11 Fencing / Bollards

(1) Fencing or bollarding is carried out along road frontages of parks/open space to limit vehicular access and may also be required in association with infrastructure such as playground equipment. This will include entrance point/s utilising either a lockable metal bollard or a lockable metal slip rail.

(2) The type of fence or barrier provided in a park/open space should be consistent with the park classification and its significance.

(3) Hydraulic constraints are considered in the design particularly in regard to the placement of restrictive fencing across stormwater overland flowpaths. Where appropriate, approved tree species or earth mounds may be located as a barrier to vehicular access.

9.10.12 Pedestrian and Cycle Paths

9.10.12.1 Paths in Open Space

(1) Refer to Chapter 5 - Road and Path Design, in this policy for the design and construction details of paths.

(2) Paths in parks are generally designed to avoid close proximity to thick vegetation or large trees in order to minimise root damage to rigid pavements and conform to clearances from vegetation and maintain adequate sight distance for bicycle riders. Refer to AUSTROADS - Part 14.

(3) Dependent on the location, paths in parks are constructed of reinforced concrete.

(4) The local government's preferred minimum width for sealed paths in parks is 2.5 metres.

(5) Refer to the local government's *Cycle and Pedestrian Strategy (2003)* for linkages and preferred locations for pathways.

9.10.12.2 Paths in Parks with Conservation Function

(1) Where a path is located in a park with a Conservation Function, it may be constructed with a permeable surface such as compacted road base or similar material as approved by the local government.

(2) Refer to the local government's *Redland Trails Manual (1997)* for preferred widths and treatments for trails.

(3) Refer to the local government's *Cycle and Pedestrian Strategy (2003)* for linkages and preferred locations for pathways.

9.10.12.3 Boardwalks and Pedestrian Bridges

Boardwalks and bridges are provided in parks/open space to facilitate pedestrian and cyclist access to activity areas and other key features. All boardwalks and pedestrian bridges are in accordance with *Australian Standard 2156.2:2001 - Walking Tracks Infrastructure Design.*

9.10.13 Vehicle Access Parking and Circulation

(1) For on-site parking refer to Part 8 - Division 1 - Access and Parking Code, and Part 9 - Schedule 1 - Access and Parking.

(2) The following on-street parking rates apply to the various park categories -

(a) Local Park - on-street parking;

(b) District Recreation - on-street parking, with a minimum 10 spaces per hectare of parkland.

9.10.14 Signage

(1) Signage is provided in a park/open space to facilitate land identification, and to promote safe and appropriate use. Signage should be placed in front of vegetation or other background landscaping to reduce the landscape impact.

(2) A local government approved park name sign is provided at the park/open space primary public access point/s.

(3) Information signs are provided at the park/open space primary access point/s and any sites of special interest in the park/open space.

(4) All parks signs are designed to the standards specified in the local government's *Parks Signage Manual (2004)*.

(5) Regulatory signs such as ordinance signage should be provided at the park's primary public access point/s at strategic locations along the road frontages of the park and throughout the park as required.

(6) Warning signs are installed at sites of potential public risk in the park such as at creeks liable to flooding.

(7) Symbol signs are in accordance with *Australian Standard 2899:1986 - Public Information Symbol Signs*.

(8) Traffic control signage, including signage for cyclists and pedestrians, complies with *Australian Standard 1742:2000 - Manual of Uniform Traffic Control Devices*.

(9) Directional signs are provided at the parks/open space primary access point/s and other key points of access in the park such as entry/exit points to major recreational paths.

(10) Walking track markers in natural areas comply with *Australian Standard AS 2156.1:2001 - Walking Tracks - Classification and Signage*.

(11) The content of proposed descriptive and interpretive signage is submitted for approval with the landscape plan.

(12) Other site specific signage such as estate entry statements, require approval by the local government.

9.10.15 Power, Water Supply and Sewerage

(1) The developer is to extend water mains, sewers and underground power reticulation to the boundaries of all parks, in accordance with the requirements of the local government's Infrastructure Works Code and Policy. Refer to Chapter 7 - Water Reticulation, Chapter 8 - Sewerage Reticulation and Chapter 9 - Electricity Reticulation and Street Lighting, of this policy.

(2) The developer installs -

(a) a minimum of one 32mm diameter water service complete with a water meter in all parks;

(b) a 32mm diameter quick-coupling bayonet fitting with a suitable back-flow prevention device and cast iron service box on each such water service at a location approved by the local government.

(3) Where parks exceed one (1) hectare in area, an additional such water service is installed by the developer, for each additional hectare or part hectare of park area.

(4) Where park is required for development to a regional standard, water reticulation is extended throughout the parkland, designed and constructed to specifications approved by the local government.

(5) The developer provides connections to sewers in accordance with a design approved by the local government. Generally, these connections are required where the local government considers that public amenities may be installed in the future at district and regional standard parks.

(6) The power supply is metered.

(7) An approved electrical layout plan is developed with reference to the landscape plan.

(8) Lighting requirements for parks is determined on a case by case basis.

(9) Street lighting is provided adjacent to all parks.

(10) Lighting is provided along commuter paths that transverse parkland including at park entrances and points of conflict. They are lit using -

(a) vandal resistant bollard lights to minimise obtrusive lighting where situated adjacent to residential properties. Raylinc BL70-CSV-CB70W 70w HPS or equivalent is acceptable;

(b) pole mounted luminaires such as Nostalgia or similar Energex Rate 2 luminaires may be used in other situations where obtrusive lighting is of no concern;

(c) lights are located at both ends of paths and at intervals along the path in accordance with an approved design or as agreed to by the local government.

(11) Lighting is provided at a Rate 2 Category.

(12) Lighting is provided in shade structures in regional parks.

(13) Energex Rate 2 lights are to have vehicular access to the installation at all times.

(14) The location of lighting is such that access for people with disability is maintained.

9.10.16 Landscape Features and Elements

(1) Where, as a condition of development approval, the local government requires tree planting, such planting and tree maintenance is carried out in accordance with the Landscape Code and this policy. Refer Chapter 11 - Landscaping of this policy.

(2) The Vegetation Management Plan (VMP) is authorised by the applicant's hydraulic consultant to ensure stormwater overland flow paths are not affected.

Note -

Irrigation systems comply with *Australian Standard 3500.1:2003 - Plumbing and drainage - Water services*. Refer section 7 - Irrigation and Lawn - watering systems.

9.10.17 General Park Treatment

(1) The following treatment is undertaken in that land which is used for park and drainage purposes -

(a) all existing structures and associated fixtures are removed from areas which are dedicated;

(b) wells are filled and sealed to the satisfaction of the local government;

(c) bores are registered and upgraded and maintained for future use;

(d) installation of an extruded concrete hard edge to all planted/revegetated areas which adjoin turfed/grass seeded areas;

(e) the applicant erects a temporary fence to the local government's standards along the full frontage of that part of the site used for residential purposes, where that part of the site adjoins land used as parkland and/or an environmentally significant area. The fence is erected at the time development works commence on site with the fence upgraded at the time;

(f) all declared and noxious weeds and trees are removed from the site as directed by the local government's representative.

9.10.18 Maintenance and Drainage

(1) Maintenance of parks and recreation areas is in accordance with AUS-SPEC *#6A - Parks and Recreation Area Maintenance*.

(2) As a condition of development -

(a) a 12 months maintenance schedule incorporating a Park Maintenance Plan (PMP) is provided to the local government;

(b) an activity specification for each maintenance activity is submitted as part of the PMP;

(c) projected costing for each activity is provided in the PMP. The costs are on a square metre basis.

(3) Drainage in parks is in accordance with the requirements of the local government's Park Code and Chapter 6 - Stormwater Management - Drainage in Parks and Overland Flow in Parks, contained in this policy.

(4) The applicant designs all underground drainage components to reflect the concerns for the environment at the outlet to public open space/conservation areas. The design and construction of the stormwater system incorporate facilities that would ensure Best Management Practice (BMP) with regard to the quality of stormwater being discharged to the environment.

Chapter 11 - Landscaping

9.11.1 Purpose

(1) This chapter of the policy is intended to provide advice and guidance to applicants preparing Landscape Plans and supporting documentation for landscape works undertaken in association with development.

(2) Landscaping is defined within the planning scheme as the treatment of land for the purpose of enhancing or protecting the amenity of the site and the locality in which it is situated.

(3) Landscape works includes but are not limited to the following operations –

(a) the planting of trees, hedges, shrubs or ground covers;

(b) the integration of significant existing vegetation into the proposal;

(c) the laying out of gardens, courts or parks;

(d) the formation of banks, mounds, terraces or other earthworks;

(e) the screening by fences, walls or by other means;

(f) the placement of elements such as furniture including seating, bins, cigarette disposal units, signage, lighting, drink fountains, bike racks, water features and public art;

(g) streetscape treatments, including street tree planting, median and roundabout planting, estate entrance treatments, stabilisation treatments to road verge batters and grassing;

(h) drainage flowpath planting, including stabilisation treatments to waterways and channels, siltation and flow-rate management to detention basins, ponds and areas of overland stormwater flow;

(i) temporary landscaping, for sales and marketing strategy, including waterfalls, fountains or planting such as annuals within the road reserve on footpath or median;

(j) irrigation;

(k) drainage;

(l) maintenance.

9.11.2 Applicabilit y

(1) This policy is read in conjunction with the Landscape Code and applies to work that involves the preparation of landscaping documentation to demonstrate compliance with the specific outcomes and applies to proposed developments on public and private land.

(2) Landscaping is addressed in a number of different Codes. The Landscape Code provides additional outcomes to that prescribed in the relevant purpose and zone codes.

(3) The Landscape Code is called up within the zone codes for certain uses and for operational works involving landscaping.

9.11.3 Application Requirements

(1) Landscape documentation comprising five sets of documents including specifications and drawings are submitted for inspection with all development applications for a –

(a) material change of use;

(b) reconfiguration;

(c) building works with the exception being building works for single residential dwellings; or

(d) as a condition of approval under the planning scheme.

(2) For details of specific requirements reference should be made to –

(a) the Landscape Code;

(b) Chapter 2 of this policy – Documentation and General Conditions;

(c) Park Code;

(d) *Capalaba Town Centre Streetscape Design Guideline Manual*;

(e) *Cleveland Town Centre Streetscape Design Guideline Manual*;

(f) *Point Lookout Headland Masterplan and Design Guidelines*;

(g) Chapter 10 of this policy – Parks and Open Space;

(h) Schedule 9 – Street Trees;

(i) Schedule 10 – Vegetation Species List;

(j) Vegetation Protection Local Law number 6;

(k) Department of Main Roads Landscape Manual and Traffic Noise Management Code of Practice;

(l) Irrigation specifications;

(m) Landscape drawings and documentation are prepared by a Landscape Architect holding AILA - Australian Institute of Landscape Architecture corporate membership, or, upon review, landscape designers with a demonstrated competence and project experience in landscape design, documentation and contract administration.

9.11.3.1 Preventing the Spread of Fire Ants

(1) The Queensland Department of Primary Industries (DPI) has introduced special regulations to help prevent the spread of fire ants. As part of this strategy, movement controls, or restrictions of the movement of any high-risk materials now apply to both commercial and non-commercial activities.

(2) High-risk materials are –

(a) soil;

(b) pot plants;

(c) mulch;

(d) potting mix;

(e) machinery and equipment;

(f) material stored on fire ant-infested ground;

(g) baled hay or straw;

(h) landscaping and construction material.

(3) To ensure development activities do not result in the spread of fire ants, all site works are undertaken in accordance with the legislative requirements and the Department of Primary Industry's (DPI's) – Fire Ant Fact Sheet, Movement Controls: Commercial Activities.

(4) Consultation with DPI regarding the legislation and movement controls is undertaken prior to the commencement of site works. This will involve the use of Approved Risk Management Plans (ARMP) and Fire Ant Declarations (FAD).

(5) This is a simple form that –

(a) records the fire ant status of the material used;

(b) describes the prevention method used;

(c) makes the mover or seller accountable for the declaration – not the receiver.

9.11.4 Amendments

(1) Where additional information or amendments are required, resubmit –

(a) Four amended copies of the documentation for approval and where applicable, notate amendments by date and description on the drawings and/or report;

(b) Four copies of the local government's correspondence of required amendments with each amendment notated with the Consultant's action.

9.11.5 Process Flowchart

(1) The following design process is required when demonstrating compliance with the specific outcomes of the Landscape Code.

Phase 1 - Site Analysis	All applications involving Landscape Works
↓	
Phase 2 - Landscape Design Concept Plans	All applications for Material Change of Use involving Landscape Works
↓	
Phase 3 - Technical Reports	Required for all proposals where the acceptable solutions can not be met and for Operational Works applications
↓	
Phase 4 - Construction Detail Plans	For all applications for Operational Works - Landscape.

9.11.6 Process

9.11.6.1 Phase 1 – Site Analysis

(1) A Site Analysis Plan is submitted with all applications that involve Landscape Works. The site analysis includes the preparation of a graphical plan or a series of thematic plans, supported by necessary report/s that describes the opportunities and constraints associated with the site and surrounding land.

(2) It is essential in the development of a site analysis plan that it details an understanding of the context of the site. This includes the identification of all surrounding land uses, land cover and land form and the identification of all potential constraints and opportunities to the development of the site and the proposed use. A Site Analysis Report and Plan/s is the end product of synthesising the investigation undertaken.

(3) The checklist provided below is not exhaustive.

Checklist - Site Analysis Information Requirements
(1) North point.
(2) Plan scales that are compatible with site plans, architectural, and engineering drawings.
(3) Full real property description of the land and adjoining lots.
(4) Site size and dimensions of all boundaries of the land.
(5) Adjoining property conditions including neighbouring buildings and outbuildings, fences, overhanging vegetation which abuts the site.
(6) Location, width and purpose of all existing easements or encumbrances, including right of ways.
(7) Site location plan that provides a suitable context, and in particular identifies adjoining and adjacent land uses and describes their scale, form and orientation with respect to the site.
(8) Description of adjoining road/s, including their category, pedestrian and cycle paths.
(9) Location of any driveways to the land and to adjoining and adjacent lots.
(10) Any significant views to or from the land.
(11) Climate including direction of prevailing winds or breezes and summer and winter sun paths.
(12) External and expected internal noise, air or electromagnetic pollutant sources that may affect the site.
(13) Contours and Australian Height Datum (AHD) ground levels where relevant.
(14) Slope analysis, which illustrates land that is 1 in 5 or steeper, 1 in 5 to 1 in 10, 1 in 10 to 1 in 20, and less than 1 in 20. This information will vary depending on the site.
(15) Natural stormwater flow paths.
(16) The line, bank and high water mark of any existing waterways or wetlands, permanent or intermittent, within or adjoining the land.
(17) Flood-prone land at 50 percent AEP, 10 percent AEP and 1 percent AEP and, where adjoining Moreton Bay, 2.4 AHD (1 percent AEP storm tide level), within and adjoining the land.
(18) Bushfire hazard zones within or adjoining the land.
(19) Contaminants present on the land.
(20) Acid sulfate soils, present or potential, on the land.
(21) Location and condition of bores, wells and dams.
(22) Geotechnical information relating to soil types, permeability and irrigation requirements.
(23) Any vegetation on the site, species botanical name, health, height, diameter and canopy spread and any ecological, landscape or habitat value.
(24) Items of topographic, landscape or scenic interest that exhibit one or more of the following characteristics – (a) is important to the scenic quality of the city; or (b) establishes the scenic character and identity of the local area because it contains – (i) a rare or uncommon landscape, such as a ridgeline, escarpment or headland; or (ii) a good representative example of natural landscape types common in the local area, such as a foreshore associated with a waterway; or (iii) significant landmark tree; or (c) visually screens inharmonious, intrusive or unattractive development and/or movement system/s.
(25) Items listed in Part 9 – Schedule 4 – Heritage Place Register, whether built, natural or indigenous
(26) Water minimisation strategies.

9.11.6.2 Phase 2 – Landscape Design Concept Plans

(1) Where any landscape works are proposed as part of an application for material change of use or reconfiguration, Landscape Design Concept Plans are prepared as a component of any development application. These conceptual plans are assessed and approved subject to amendment prior to operational works, construction documentation stage, and are subject to the whole or part of the development approval conditions.

Checklist - Landscape Design Concept Plans and Drawing Information Requirements
(1) North point and plans that have north orientated to the top of the drawing
(2) Plan scales that are compatible with site plans, architectural, and engineering drawings.
(3) Size and dimensions of proposed and existing lots
(4) Existing site information including, but not limited to, significant vegetation, boundaries, contours, underground/overhead services, easements and drainage lines.
(5) Proposed building design and layout.
(6) Adjoining structures including trees that overshadow the site.
(7) Trees covered by preservation orders or by laws
(8) Existing vegetation that is to be retained and/or removed
(9) Location of identified areas of ecological value and/or ecological corridors
(10) Location of adjoining linkages such as pedestrian, bikeway and vehicular
(11) Proposed planting themes and entry treatments
(12) Proposed surface treatments for all areas not built on including paths and driveways.
(13) Indication of site grading and any retaining structures
(14) Indication of proposed location of recreation facilities and/or infrastructure
(15) Drainage and open space corridors
(16) Proposed building footprint/s, heights and finished floor levels
(17) Bushfire hazard zones and fire trails
(18) Indication of entry statements and signage treatment
(19) Indicative positions of all street furniture
(20) Public art feature
(21) Lighting at pedestrian scale and street lighting
(22) Side, rear and frontage setbacks to proposed building
(23) Communal and private open space areas.
(24) External storage spaces and structures, including pergolas and sheds,
(25) Utility areas, clothes drying, waste and recycling storage collection areas.
(26) Fencing height and style
(27) Location, material variations and dimensions of driveway/s and footpaths.
(28) Sections through the site indicating natural ground level and finished surface levels for the site and land immediately adjoining the subject site

9.11.6.3 Phase 3 – Technical Reports

(1) Where a proposal can not meet, or, in the opinion of the local government, does not meet the specific outcome, the applicant will be asked to demonstrate compliance through the preparation of technical reports. These reports are prepared by suitably qualified and experienced persons and are provided with the development application at the time of lodgment.

(2) Technical reports should address each specific outcome. The format, methodology and criteria used to prepare the reports are in accordance with the local government requirements prior to commencement of investigations. However the local government is under no obligation to accept the findings of these technical reports.

(3) Technical reports are to contain conclusions and recommendations which can be incorporated into the design and construction of proposals and are included with the conditions of any approval. The recommendations are of sufficient detail to enable post construction certification and compliance sign off by the local government.

(4) Where existing vegetation including significant trees are retained, an arborist report may be required to determine parameters to minimise the risk to, and long term viability of the tree root

zones and/or canopy. The terms of reference for the arborist report should include but not be limited to –

(a) qualifications in arboricultural practice including particular membership of a relevant association and relevant local experience. For example, coastal landscapes and exposed sites require specialist knowledge and assessment;

(b) assessment of tree characteristics, current health and defects of significant tree/s and any other trees and shrubs which overhang from neighbouring properties. A proforma format is acceptable provided it is accompanied by relevant discussion and illustrated photos and includes the scientific reasoning to support statements;

(c) provision of a contextual analysis which describes, in text and with photos, the tree as an element of an ecological unit, cultural landscape, or historic listing such as a vegetation protection ordinance;

(d) photographs of any disease, damage or defect with descriptions and annotated photos showing recommendations and actions for remediation and an estimate of the remaining lifespan of tree or major branch affected, and relative risk to human safety or property;

(e) photographs, tree plot to scale showing canopy height and root zone spread in relation to any existing or proposed building/driveway, calliper of trunk at chest height, botanical name, and common name;

(f) show spot height of trunk and extent of any earthworks in the vicinity;

(g) identification of any weed and invasive species as nominated in Schedule 12 – Weed Species and the local government's Vegetation Enhancement Strategy;

(h) weed removal methods;

(i) protection measures during construction phase which should include protective barriers to minimise risk to property and people and protective barriers for tree trunks and root zones;

(j) methods for trimming of tree roots and canopy;

(k) disturbance to tree root zone for hard landscape works such as cultivation for new plant material;

(l) materials for hard landscape works, such as permeable paving and retaining edges;

(m) irrigation regime;

(n) inspections and monitoring of any modification to the tree form during maintenance period.

(5) A tree management plan is to be prepared by the applicant for trees on private land as part of an application to the local government for Operational Works – Landscaping. The intent of the plan is to provide direction for the management of the seasonal growth of mature/maturing trees including existing trees and new tree plantings. The plan is to be initiated by the owner or Body Corporate and include the provision of an initial and any subsequent annual technical reports and is to include provision for the supervision of any annual pruning, crown modification in accordance with *AS4373-1996 Pruning of Amenity Trees* and/or of any vegetation that has the potential to conflict with buildings, pedestrian access and public safety. The tree management plan is to be initiated annually in May/June prior to the spring growth period or as otherwise agreed by the local government. The tree management plan is to provide certainty for -

(a) the assurance that the trees growth achieves the intent of the landscape design and vegetation management plan through correct and uniform practices;

(b) reduction of hazard development, branch failure, fungal infection or premature tree death;

(c) reduction of the likely impact of storm damage after the site has been occupied;

(d) formative pruning of young and developing trees where deemed necessary in accordance with *AS4373-1996 Pruning of Amenity Trees*;

(e) the minimisation of any potential risk to people and property;

(f) the ability for major site works to be undertaken by a landscape contractor and supervised by a qualified arborist or horticultural specialist;

(g) the plan is to be submitted to the local government for approval before initial remedial work occurs and any proposed amendment to the plan will require further local government approval.

(6) Where there are specific Guidelines for Streetscape and other Landscape Works such as the Point Lookout Streetscape Master Plan, provide a report detailing how the application for Landscape Works addresses the specifics of this policy.

(7) Where a use is proposed on rural land or land with identified environmental values, details are included in the application which demonstrates the efficient and sustainable use of the land while maintaining and protecting the site's ecological, character, scenic or community values.

9.11.6.4 Phase 4 – Construction Design Plans and Documentation

(1) Prior to any development works commencing, it is a requirement to provide detailed construction plans, reports and specifications in relation to an approved development through an application for a development permit for operational works – landscape submitted to the local government.

(2) Provide detailed plans and documentation containing the following minimum amount of information as applicable –

(a) specification notes for plant establishment period and maintenance;

(b) a statement detailing how the development achieves the outcomes of the Landscape Code;

(c) a statement detailing how the development achieves any relevant conditions of the development permit approval;

(d) existing site information, boundaries, contours, underground/overhead services, easements, drainage lines, or the like;

(e) adjoining structures that overshadow the site;

(f) plants covered by Local Law No. 6 – Vegetation Protection, significant trees that are proposed for retention and trees proposed for removal due to the development;

(g) tree protection measures during site works for all vegetation that is proposed to be retained;

(h) the canopy height and spread of any major tree or building footprint on adjoining property which the proposed development may affect in any way. The incorporation of a qualified arborist's findings may be relevant where adjoining tree root zones or canopy extends into the development site;

(i) specification notes either on the drawings or in an associated report that adequately outlines the quality of construction materials, and all other relevant information;

(j) details on the removal and/or recycling of vegetation;

(k) proposed location of buildings/structures including finished floor levels;

(l) roadways, car parks, footpaths, driveways with description of materials and finishes;

(m) all areas and their proposed treatment such as surface treatments, planting layout, planting schedule, including botanical names, stock sizes, quantities, staking and planting details;

(n) fences and screens indicating materials, heights and construction details;

(o) location and details of street or park furniture, fixtures and lighting;

(p) indicative cross-sections of important features or areas of the site such as entrances, waterways and retaining walls;

(q) fire mitigation works where necessary;

(r) proposed stormwater quality control devices. Design and construction of these devises are shown on separate plans which detail design, construction, maintenance and management of the device;

(s) the proposed location of infrastructure servicing the site;

(t) the proposed location of freestanding signage structures;

(u) details of irrigation system;

(v) details of subsurface drainage;

(w) details of surface drainage including overland flow paths;

(x) proposed design levels and original ground levels/contours;

(y) design details and materials of all surfaces, retaining walls, edging, embankments, furniture, planting, lighting and other structures including entry statements;

(z) integration of any public art feature;

(aa) typical cross sections through the site;

(bb) erosion and sediment control measures including methods of bank stabilisation and revegetation of areas of exposed and/or disturbed soil;

(cc) construction details for planting, paving, edging and retaining structures;

(dd) location and details of hose-cocks;

(ee) street trees in residential areas are planted a minimum of –
- (i) 3 metres from power poles, driveways, inspection boxes, fire hydrants and water valves;
- (ii) 7 metres from street lights;
- (iii) 10 metres from a departing corner;
- (iv) 15 metres from an approaching corner and bus stop.

9.11.7 Heritage Places

(1) Uses and other development identified on the Heritage Place and Character Precinct Overlay considers the historical/cultural context of the locality in which they are located. Relaxation of the species identified in Schedule 9 – Street Trees or Schedule 10 – Vegetation Species List may be granted where it can be demonstrated that alternative species will assist in maintaining the prevailing historical character of the locality. However, those species listed in Table 1 of Schedule 12 – Weed Species List will not be considered under any circumstances.

9.11.8 Habitat Protection Overlay Code

(1) Revegetation of habitat protection areas will require special attention in landscape concept and construction plans. Indigenous fauna including koalas use and require access to a variety of species throughout the city in order to maintain healthy populations.

(2) Recommended species are outlined in Part 9 – Schedule 9 – Street Trees and Schedule 10 – Vegetation Species List.

9.11.9 Works on Public Land

(1) Where existing trees are retained all dead wood and potentially dangerous trees or tree limbs are removed. Where construction works impact on the health of a tree to initiate deterioration and/or death to the whole or part of the tree during the period of construction, the developer is to attend to the removal of that tree or part thereof under the direction of the delegated local government officer.

9.11.9.1 Single Dwelling Unit Verge Planting

(1) Verge planting which is wholly contained within 900mm of the front boundary will not require local government approval provided the planting meets the following conditions –

(a) planting is not higher than 500mm;

(b) planting does not obstruct the path or compromise user's safety;

(c) planting does not obstruct the vision of pedestrians or motorists when entering or exiting the property;

(d) planting is properly maintained;

(e) planting allows access to public utility service providers to carry out their work;

(f) garden bed edging is flush with the natural ground level;

(g) planting does not contain plants with thorns or spikes which are potentially dangerous to pedestrians or cyclists;

(h) any sprinklers are contained within 900mm of the front property boundary;

(i) landscaping located on a verge does not contain any permanent structures including footings, letter boxes, retaining walls, ornaments and the like;

(j) landscaping or planting is not located on local government parkland; and/or

(k) landscaping does not contain loose stones or pebbles as ground cover.

(2) Planting which is not wholly contained within 900mm of the front boundary will require local government approval.

9.11.9.2 Road Medians and Traffic Island Planting

(1) Medians and traffic islands which are not concrete in-filled are designed to accommodate planting by providing –

(a) a median kerb keyed a minimum of 135mm into the pavement;

(b) a 300mm concrete backing strip behind the kerb;

(c) adequate site preparation and soil depths with a minimum soil depth of 400mm deep friable organic soil;

(d) root barriers where the trunk diameter will be greater than 100mm;

(e) conduit for future water taps or irrigation where relevant;

(f) sub-soil drainage.

9.11.9.3 Verge Turfing

(1) Verge areas which are not paved or planted, are turfed with a minimum depth of 100mm friable organic soil as approved by the local government.

9.11.9.4 Round-a-bout Planting

(1) Planting on centre islands and adjacent to round-a-bouts is subject to vehicular and pedestrian sight distance which conforms to *AUSTROADS* – Part 6, Roundabouts and the *Road Landscape Manual* published by the Department of Main Roads, Queensland.

(2) Generally, planting in centre islands of round-a-bouts of radius 6 metres to 10 metres is restricted to a maximum height of 500mm above the roadway pavement where outside a 3 metre diameter centre zone.

(3) The planting height restriction for areas adjacent to round-a-bouts also applies to zones affected in accordance with the criteria in AUSTROADS, Part 6, section 4.2.7. Sight lines are based on a vehicle approach speed of 50km/hr, a manoeuvre speed of 28km/hr and a 4 second gap acceptance. A sight line of 55 metres is adopted within this area in which planting is limited in height to 0.5 metres above the pavement.

(4) No planting is permitted within 1.5 metres of the outside of the centre island circle of the round-a–bout.

(5) Refer to Diagram 1 for sight distance requirements for various size round-a-bouts.

Diagram 1 - Sight Distance Requirements for Round-a-bouts

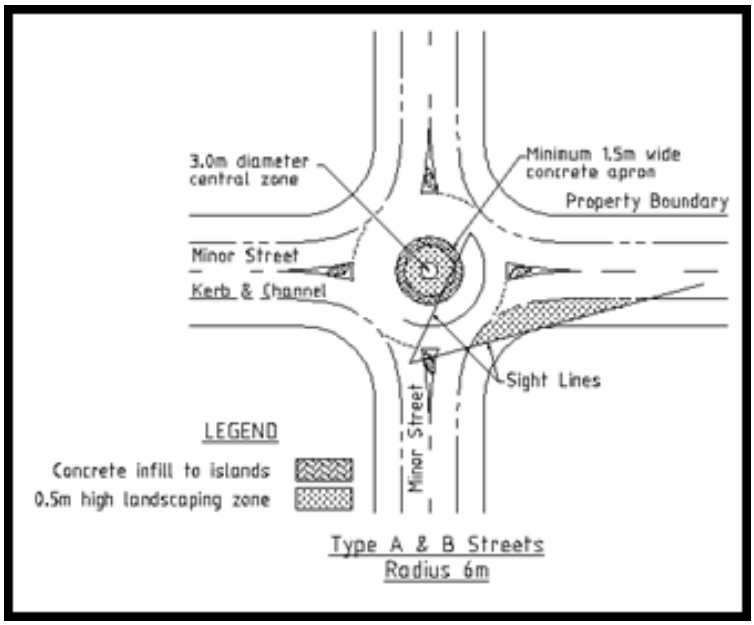

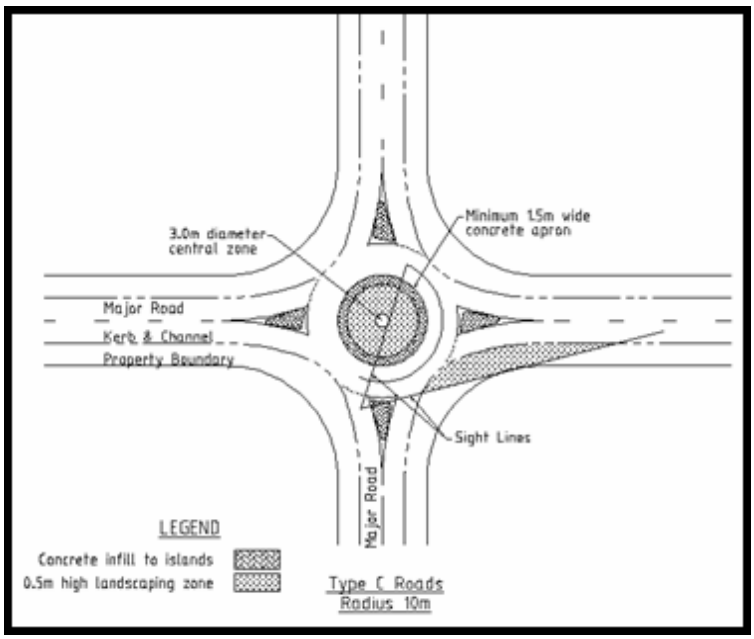

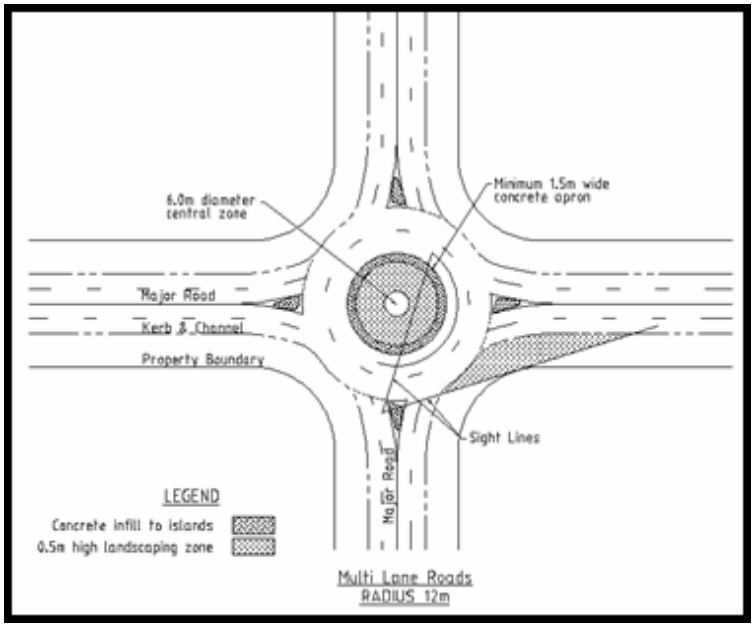

9.11.9.5 Irrigation Design

(1) Irrigation drawings and documentation are prepared by a person acceptable to the local government, having the following minimum experience/qualifications –

(a) A recognised independent irrigation consultant;

(b) A fully qualified certified irrigation designer.

(2) The principal requirements for irrigation design in the local government area are to ensure water conservation, minimal maintenance, healthy and sustainable plant growth and relevance to individual plant species needs.

(3) Where irrigation will form part of an on-going project, a masterplan is provided to the local government indicating the –

(a) extent of proposed irrigation works;

(b) areas proposed for sacrificial irrigation works;

(c) proposed water supply sources;
(d) proposed power supply points.

(4) Areas on public land which are to have permanent irrigation for which the local government will be responsible, are soil tested for suitability of the proposed plant species and moisture retention capabilities. Where the soil is found to be unsuitable, it is excavated for a depth of 400mm and backfilled with well draining friable organic soil which meets the respective specification for the proposed type of planting. Refer to *Australian Standard 4414: 2003 - Soils for landscaping and garden use*.

(5) Irrigation installation and equipment, which will be maintained by the local government, conforms to the local government approved specification and is connected with the local government's central automatically controlled irrigation system.

9.11.9.6 Treatment of Existing Vegetation

(1) All tree works are performed by a qualified arborist who is a member of the Australian Arborist Association or equivalent professional organisation and to *Australian Standard 4373: 1996 - Pruning of Amenity Trees*.

9.11.9.7 Entry Features

(1) Entry features to residential areas are basic structures confined to the entrance area only.

(2) Entry features are not to compromise public safety or public utilities.

(3) Entry features to residential areas are constructed of low maintenance materials that can be readily replaced and maintained. Standard brick and concrete are acceptable.

(4) Entry features are to have anti-graffiti treatments and have mowing strips both sides for ease of maintenance.

9.11.10 Pre-Construction

(1) Prior to the commencement of any site works a pre start meeting in held on site with the local government representative to determine the extent of tree protection and site stabilisation.

9.11.11 Completion and Maintenance Period

(1) At practical completion of all landscape works, the Principal Consultant conveys in writing to the local government that works are finished and inspection can be implemented.

(2) An On-Maintenance period for all the landscape works is initiated upon successful inspection and submission of As-Constructed information of completed works on public land as per the approved landscape documentation.

(3) As-Constructed documentation includes, but is not limited to the following information –

(a) Design Drawings, certified As-Constructed. Refer Chapter 2 – Documentation and General Conditions of this policy;

(b) Inspection and testing certification where applicable;

(c) Certification of foundation conditions, where applicable;

(d) Copies of test results on –
(i) compaction of fill, where required;
(ii) subsoil drain filter media grading, where applicable;
(iii) any concrete testing required by the local government;
(iv) any other job specific testing carried out or ordered by the local government.

(4) The documentation is presented in a logically assembled document including a table of contents confirming completeness.

(5) Should any of the above test results fail to meet the local government's requirements, the Landscape Architect is to include details of re-testing/rectification carried out.

(6) The duration of the On-Maintenance period is varied from a minimum of six months to a maximum of eighteen months depending on the scale of development and in order to ensure establishment/survival of planted species through varying seasonal conditions.

(7) On completion of the On-Maintenance period the Principal Consultant should notify the local government, to enable a final inspection to be conducted for Off-Maintenance approval.

(8) Where landscape works have not been maintained satisfactorily, the maintenance bond may be applied to rectify uncompleted maintenance works.

9.11.11.1 As-Constructed Information

(1) For works on public land, design drawings associated with the Operational Works – Landscape approval are amended, if necessary, to reflect the final As-Constructed works. This information is supplied to the local government on paper copies and, for irrigation works, the information is submitted on paper copies and as an AutoCAD drawing file.

9.11.11.2 Predicted Maintenance Costs

(1) Developments where land is proposed as a contribution for landscape purposes, such as a public park or streetscape in an urban centre and where the local government will be responsible for the maintenance and management of the area, the local government will assess the predicted on-going maintenance costs. This may result in recommendations for design changes to reduce any excessive maintenance or risk to persons and/or property.

this page purposely
left blank

Chapter 12 - Excavation and Fill

9.12.1 Purpose

The purpose of this chapter of the policy is to set out requirements under the planning scheme regarding the preparation and submission of technical reports associated with development applications for excavation and fill.

9.12.2 Applicabilit y

(1) This chapter of the policy applies to applications for –

(a) material change of use that involve excavation or fill;

(b) building work that involve excavation or fill;

(c) operational work that –
(i) involve excavation or fill; or
(ii) are for the purpose of excavation or fill.

9.12.3 Application Requirements

(1) An application involving excavation and/or fill requires the submission of the following information –

(a) A site analysis plan showing –
(i) the current ground levels of the premises based on –
a. contour levels at 0.5 metres;
b. spot levels at a maximum of 10 metre intervals;
(ii) existing vegetation;
(iii) proposed final contour levels at 0.25 metres;
(iv) existing waterways and overland drainage paths;
(v) details of any public utility infrastructure, particularly local government infrastructure within or adjoining the site;
(vi) location of easements on or adjoining the premises;
(vii) grades of slope between the road reserve and any existing or future building envelope(s);

(b) A hydraulic study including details regarding flood levels and impact on adjoining, upstream or downstream properties;

(c) Extent of new cut and/or fill and compaction measures proposed;

(d) Location and height of cut and/or fill in relation to adjoining premises;

(e) Details regarding the nature of proposed fill material;

(f) A geotechnical report, in accordance with section 9.12.4 of this chapter, confirming the stability of existing and/or recontoured land particularly when the existing or proposed slope is greater than 15 percent;

(g) Relevant detail of the suitability of the land, where earthworks are proposed, for the founding of buildings, roads and infrastructure in relation to aspects such as, but not limited to, acid sulfate soil, flooding, environmentally sensitive land and stormwater flowpaths;

(h) Details in relation to truck site access and haulage routes for delivery and removal of material from the site;

(i) Information in relation to the control of potential environmental emissions;

(j) Details of any earth retaining structures proposed, including construction materials, proposed landscaping treatment, stability, structural soundness and design life;

(k) Operational works for reconfiguration do not include timber earth-retaining structures;

(l) The extent and nature of any site contamination;

(m) Details regarding the potential for earthwork activity to create vibrations that could cause damage to nearby structures or buildings directly and indirectly;

(n) Details regarding vegetation to be retained and associated protection measures;

(o) Site analysis plan detailing the location of any existing infrastructure and future infrastructure proposed within the vicinity of the earthworks detailing the impact that excavation and/or fill will have on infrastructure;

(p) Details of stormwater drainage run-off, sedimentation and erosion control measures proposed.

9.12.4 Geotechnical Report

(1) The local government may request the following information from the applicant to assist the assessment of a development application involving land identified as difficult topography such as unstable or steep slopes –

(a) A geotechnical assessment addressing the site's physical and environmental suitability for the proposed development including –
  (i) a site analysis which identifies existing vegetation and geological information and contour lines to Australian Height Datum (AHD) at a maximum of 0.5 metre vertical intervals;
  (ii) an assessment of the impact that the proposed development would have on the stability of the premises and nearby premises.

(b) Design features necessary for incorporation into the development of the site to reduce the risk to life and property to an acceptable level, including –
  (i) access to the site;
  (ii) proposed excavation and fill;
  (iii) the design, location and method of construction of buildings, structures and infrastructure, including recommendations of design outcomes responsive to the premises' physical, environmental and visual characteristics;
  (iv) on-site wastewater and stormwater disposal;
  (v) removal of existing vegetation;
  (vi) any other changes to the natural surface or underground drainage systems;
  (vii) maintenance and other management practices to ensure long-term stability.

9.12.5 Calculating Slope from a Topographic Map

The *State Planning Policy Guideline: Mitigating the Adverse Impacts of Flood, Bushfire and Landslide* (*June 2003)*, Appendix 10, details the methodology for calculating the percent gradient of a slope from a topographic map.

9.12.6 Excavation and Fill Testing

(1) All excavation and fill testing is carried out in accordance with *Australian Standard 3798: 1996 - Guidelines on Earthworks for Commercial and Residential Developments*.

(2) The level of control is subject to approval of the local government. Tolerances on level are to ensure that the finished grade is within 0.5 percent of the design grade and that the resultant profile achieves its design functions.

(3) The specification applicable for earthworks construction on land controlled by the local government is in accordance with *Queensland AUS-SPEC # 1-Construction; Earthworks*, except as amended in this policy.

9.12.7 Clearing

(1) Clearing is in accordance with planning approvals, local government Local Laws and the *Environmental Protection Act 1994*.

(2) The specification applicable for clearing on land controlled by the local government is in accordance with *Queensland AUS-SPEC # 1-Construction; Clearing and grubbing*, except as amended in this policy.

9.12.8 Contaminated Land

(1) Where premises may have been subjected to contamination, a Site Contamination Report is prepared to the satisfaction of the Environmental Protection Agency (EPA). In this instance, the EPA is a concurrence agency to the development application.

(2) The development is undertaken in accordance with the requirements of the *Environmental Protection Act 1994* and the local government's *Contaminated Land Environmental Management Plan*.

this page purposely
left blank

Chapter 13 - Development Near Underground Infrastructure

9.13.1 Purpose

The purpose of this chapter of the policy is to clearly set out the location criteria including clearances required for safety and maintenance purposes between utility infrastructure services, other infrastructure and development including buildings and structures.

9.13.2 Applicabilit y

(1) This chapter of the policy applies to all development sites under the planning scheme where service provider utility infrastructure is –

(a) existing or proposed;

(b) on or adjacent to the subject premises.

9.13.3 General Requirements

Works associated with Class 1 to 10 buildings, structures, and special structures constructed or undertaken near, over, under or adjacent to existing or proposed utility infrastructure, are to comply with the applicable requirements of *AS/NZS 3500.2.2: 1996 - National Plumbing and Drainage – Sanitary plumbing and drainage – Acceptable Solutions*.

9.13.4 Location of Class 1 to 10 Buildings, Structures and Special Structures

(1) Class 1 to 10 buildings, structures, special structures and associated works are located to avoid interference with utility infrastructure services. Unless approved in writing by the local government, works are not located –

(a) over or within a dedicated easement;

(b) over or under sewer mains; or

(c) over or under stormwater drainage mains.

(2) Exceptions to this requirement are –

(a) Prefabricated garden sheds of lightweight construction, maximum size 3 metres by 3 metres, may be located over a 150mm diameter local government sewer, provided it is not within 1.5 metres of a maintenance hole or sewer access point;

(b) Prefabricated steel framed garages of lightweight construction up to 6 metres by 6 metres may be located above a 150mm diameter local government sewer, provided it is not within 1.5 metres of a maintenance hole or sewer access point and the soil report does not indicate a medium to high expansive soil;

(c) Sewers of 150mm diameter may be accepted under proposed buildings or structures if no feasible alternative is available in the opinion of the Manager of Redland Water and Waste.

(3) Minimum requirements are –

(a) Maintenance holes or access points are constructed outside and adjacent to a building and at any changes in direction;

(b) Local government access is available to maintenance holes or access points at all times.

(c) Replacement of the existing sewer with a pipe that achieves a minimal structural strength, such as ductile iron or similar, that has a future life in excess of 50 years at the discretion of the Manager Redland Water and Waste;

(d) A minimum of 300mm clearance from the top of the pipe to the underside of the footing. No load is placed on the pipe. Engineering details are provided by a registered professional engineer indicating the method proposed to avoid imposing a load on the pipe;

(e) Conditions of approval to include such methods that are required for the protection of the structure or building and its occupants;

(f) If appropriate, maintenance conditions not exceeding 24 months.

9.13.5 Footing Loadings

All footings/foundations from Class 1 to 10 buildings, structures and special structures do not impose a load onto any service provider utility infrastructure service.

9.13.6 Soil Properties

(1) Where works are carried out near, over, under or adjacent to utility infrastructure, account is taken of the soil properties of the premises.

(2) Where the premises contains potentially expansive soils, the applicant is required to submit with the development application a report by a Registered Professional Engineer of Queensland certifying the suitability of the proposal considering the soil properties of the premises.

9.13.7 Alterations, Repairs, Relocations or Replacements to Utility Infrastructure

(1) Any alterations, repairs, relocations or replacements to existing utility infrastructure services which are involved in or caused by any works of the proposal are made by Redland Water and Waste at no cost to Redland Water and Waste or the local government at the discretion of the Manager Redland Water and Waste.

(2) The developer is not to repair, relocate or replace existing utility infrastructure.

9.13.8 New Utility Infrastructure Installations

(1) New utility infrastructure installations constructed by the developer that are involved in, or caused by the proposal are made in accordance with local government conditions and at no cost to Redland Water and Waste or the local government at the discretion of the Manager Redland Water and Waste.

(2) Connections of new utility installations to existing infrastructure will be made by Redland Water and Waste.

Chapter 14 - Domestic Driveway Crossover

9.14.1 Purpose

The purpose of this chapter of the policy is to set out the requirements for the preparation and submission of plans for domestic driveway crossovers.

9.14.2 Applicabilit y

(1) A domestic driveway crossover is only applicable for a dwelling house, dual occupancy or a small lot house.

(2) Larger scale developments, for example multiple dwellings or industrial or commercial uses, comply with the Access and Parking Code and Chapter 5 – Road and Path Design of this policy.

9.14.3 Location and Design

(1) The location, profile, gradient, minimum and maximum width, and structural strength of a domestic driveway crossover conforms to –

(a) *Standard Drawing R-RSC-2 – Domestic Driveway Crossover for Kerb and Channel* in areas where kerb and channel exists; or

(b) *Standard Drawing R-RSC-16 – Domestic Driveway Crossover for Pipe Crossing* in areas where a roadway table drain exists; or

(c) *Australian Standard 2890.1: 2004 – Parking Facilities – Off-Street Car Parking*.

(2) A domestic driveway crossover is located more than 300mm from existing utility infrastructure, including access covers.

(3) Underground utility services beneath domestic driveway crossovers are protected in accordance with the local government's approved standard drawings R-RSC-9 and R-RSC-10. Advice regarding the location and depth of utility services may be obtained by phoning "Dial before you dig" on 1100.

(4) The location of a domestic driveway crossover does not conflict with drainage catchpits.

(5) It is the responsibility of the property owner to bear all costs which may be incurred in the event that existing infrastructure requires repair or relocation.

(6) In circumstances where the standard cross section cannot be achieved inside a premises with a maximum batter slope of 1 in 6 to the building alignment, the local government may approve the construction of an accessway inside a premises at a slope of 1 in 4 from the front property boundary to the building alignment.

(7) The finished edge and surface of all driveway crossovers do not create an uneven or slippery hazard for pedestrians.

(8) The adjoining verge earthworks are well compacted and flush with the driveway crossover surface.

(9) Edge kerbs are not permitted.

(10) A driveway crossover for one property does not encroach on the frontage of any adjacent property except by written agreement of the two adjacent property owners and subject to approval by the local government.

(11) The slope across the width of the driveway crossover, parallel to the property boundary, is approximately the same as the slope along the roadway until the crossover enters the premises. This requirement avoids abrupt changes in grade on the verge for pedestrian safety.

Chapter 15 - Access and Parking

9.15.1 Purpose

(1) The purpose of this chapter of the policy is to assist in the provision of safe and clearly defined off-street and on-street parking that meets requirements generated by the development including –

(a) access and egress routes;

(b) internal on-site vehicular movements and queuing areas;

(c) vehicle parking areas;

(d) service vehicle manoeuvring areas.

9.15.2 Applicabilit y

(1) This chapter applies to all development required to comply with the Access and Parking Code. This primarily includes development located in commercial, industrial and centre zones as well as larger scale residential development such as multiple dwellings, aged persons and special needs housing and apartment buildings.

(2) Where a stated Australian Standards conflicts with the local government's standard drawing, the standard drawing prevails.

9.15.3 On-Street Parking

(1) On-street parking conforms to *Australian Standard 2890.5: 1993 - Parking facilities- On-street parking* and the Access and Parking Code.

(2) Line marking and signage is to conform to *Australian Standard 2890.5: 1993 - Parking facilities- On-street parking* and the Queensland Department of Main Road's *Manual of Uniform Traffic Control Devices (MUTCD)*.

(3) Front-in angle parking is acceptable provided the proposal is in accordance with *Australian Standard 2890.5: 1993*. When this standard is not possible, reverse in parking is preferred for safety reasons.

9.15.4 Off-Street Parking

(1) Off street parking conforms with –

(a) the Access and Parking Code;

(b) *Australian Standard 2890.1: 2004 - Parking facilities- Off–street car parking*;

(c) *Australian Standard 2890.2: 2002 - Parking facilities- Off-street commercial vehicle facilities*.

(2) Where conflict exists, the local government's Access and Parking Code takes precedence.

9.15.5 Drivew ay Location

(1) Driveway crossovers for a multiple dwelling, apartment building, aged persons and special needs housing or a commercial or industrial development are located in accordance with –

(a) *Australian Standard 2890.1: 2004 - Parking facilities- Off–street car parking Section 3;*

(b) *Australian Standard 2890.2: 2002 - Parking facilities- Off–street commercial vehicles facilities Section 3;*

(c) the Access and Parking Code and this policy.

(2) A driveway crossover for one property does not encroach on the frontage of any adjacent property except by written agreement of the two adjacent property owners and subject to approval by the local government.

(3) The driveway crossover is located more than 300mm from any existing utility infrastructure access covers, drainage catch pits or other such infrastructure.

(4) Underground utility services beneath driveway crossovers are protected in accordance with the local government's approved standard drawings R-RSC-9 and R-RSC-10.

(5) Where vehicular entrance locations inadvertently conflict with drainage catchpits, it is the responsibility of the property owner to bear all costs which may be incurred in the event that the drainage infrastructure requires relocation.

Note -

Advice regarding the location and depth of utility services may be obtained by phoning "*Dial before you dig"* on 1100.

9.15.6 Driveway Crossover Design

(1) The design of driveway crossovers conforms with –

(a) the local government's standard drawings numbered R-RSC-2, R-RSC-3, R-RSC-4 and R-RSC-16;

(b) *Australian Standard 2890.1: 2004 – Parking facilities – Off–street car parking Section 3* and *Australian Standard 2890.2: 2002 – Parking facilities – Off-street commercial vehicle facilities Section 3.*

(2) The local government's standard drawings take precedence over Australian Standards except where they conflict with the Department of Main Roads requirements.

(3) The finished driveway crossover surface texture does not create an uneven or slippery hazard for pedestrians.

(4) The adjoining verge earthworks are well compacted and flush with the edge of the driveway crossover surface.

(5) Kerbs or similar profiling on the edge of driveway crossovers are considered a pedestrian hazard and are not acceptable.

9.15.7 Internal Accessways

(1) Internal accessways conform to –

(a) the Access and Parking Code;

(b) *Australian Standard 2890.1: 2004 – Parking facilities – Off–street car parking Sections 2 and 3* and *Australian Standard 2890.2: 2002 – Parking facilities – Off-street commercial vehicle facilities Sections 2 and 3.*

(2) Where a conflict exists, the local government's code and policy take precedence.

(3) Internal accessway kerb and channel has a minimum grade of 4 percent.

(4) Edge treatment for internal access-ways is barrier kerb and channel as per the local government's approved standard drawing R-RSC-6.

(5) California Bearing Ratio (CBR) testing does not replace the need for soil survey reports for foundation/structure design.

(6) The minimum standard for internal concrete road pavements is N25, 125mm thick slab with F72 reinforcement, supported on bar chairs and laid on a compacted gravel base course 100mm thick.

(7) Layout of construction joints and sectional details of joints are required on plans submitted with the application.

(8) Commercial and industrial development accessway edge treatment is barrier kerb and channel as per the local government's standard drawing R-RSC-6.

(9) Edge treatment for other uses may be varied where practicable.

9.15.8 Internal Lot Accessways

(1) Internal lot accessways are –

(a) incorporated into the design of reconfiguration developments with the provision of a 3 metre minimum width sealed driveway from the road reserve boundary to the building area of the lot;

(b) provided with underground utility services for water, communications and electrical connections, in separate conduits extending the length of the access driveway;

(c) truncated for pedestrian safety at the intersection of the driveway and road reserve in accordance with *Australian Standard 2890.1: 2004*;

(d) designed with exit sight distance conforming to *Australian Standard 2890.1: 2004*.

9.15.9 Queuing

(1) Requirements for vehicular queuing conforms to –

(a) the Access and Parking Code;

(b) Schedule 1 – Access and Parking, Table 4 – Minimum On-site Queuing Requirements;

(c) *AS 2890 Part 1 Section 3*; and *AS 2890.1: 1993 – Parking facilities – Off–street car parking Section 3.*

(2) Where a conflict exists, the Access and Parking Code takes precedence.

9.15.10 Vehicle Parking Areas and Structures

(1) Design of vehicular parking areas and structures conform to –

(a) *Australian Standard 2890 Parts 1 and 2*;

(b) the Access and Parking Code;

(c) *Australian Standard 2890.1: 1993 - Parking facilities- Off–street car parking* and *Australian Standard 2890.2: 2002 - Parking facilities- Off-street commercial vehicle facilities.*

(2) Edge treatment for parking and landscaping areas is barrier kerb and channel as per the local government's standard drawing R-RSC-6.

(3) Kerbs used as wheel stops are in accordance with *Australian Standard 2890.1: 1993 - Parking facilities-Off-street car parking, Section 2*.

9.15.11 Servicing and Manoeuvring Areas

(1) Design of servicing and maneuvering areas conform to –

(a) *Australian Standard 2890 Parts 1 and 2*;

(b) the Access and Parking Code;

(c) *Australian Standard 2890.1: 1993 - Parking facilities- Off–street car parking* and *Australian Standard 2890.2: 2002 - Parking facilities- Off-street commercial vehicle facilities.*

(2) Edge treatment for servicing and maneuvering areas is barrier kerb and channel as per the local government's standard drawing R-RSC-6.

(3) Provision is made for all vehicles to enter and exit commercial, industrial and larger scale residential developments in a forward gear.

Chapter 16 - Waste Management

9.16.1 Purpose

(1) To outline the circumstances in which waste management will be required as part of a development approval.

9.16.2 Applicabilit y

(1) The local government will require waste management in accordance with this policy as a condition of a development permit pursuant to the *Integrated Planning Act 1997* in respect of a development application for –

(a) a material change of use that is assessable development; or

(b) the reconfiguring of a lot that is assessable development.

9.16.3 Waste Storage - Residential

(1) Each residential dwelling unit and dwelling house has their own dedicated waste storage area, for one 140L or 240L waste wheelie bin and one 240L recycle wheelie bin, that –

(a) is located within the curtilage of the dwelling unit, not including single garages or carports;

(b) allows for containers to be moved from storage area to service point without travelling over steps or through dwelling areas, including garage;

(c) has a hardstand surface and screens bins from view;

(d) is no less than 800mm wide x 1500mm long x 1100mm high; or

(2) A centralised container storage area serving a number of dwelling units -

(a) is dedicated for the storage of waste and recycling containers and associated equipment only;

(b) is either an external waste and recycling storage enclosure that complies with section 9.16.6 or an internal waste and recycling storage room that complies with section 9.16.7;

(c) is large enough to store the number of waste and recycling containers, being bulk bins or wheelie bins, equivalent in volume to the appropriate type of residential premises in Table 1 – typical waste generation rates;

(d) allows for 0.5m space around containers for manoeuvrability and cleansing;

(e) has separate access for container retrieval and occupant use;

(f) has a smooth hardstand surface that will permit easy bin movement, not including asphaltic concrete;

(g) is fitted with bump rails to prevent bins from contacting walls;

(h) is both a storage area and a service point when bulk bins greater than 1.5m^3 are used;

(i) is both a storage area and a service point or is positioned within 20m of the service point when bulk bins less than 1.5m^3 or less are used;

(j) is not located immediately adjacent to living and eating areas of any unit or neighbouring property;

(k) complies with waste servicing section 9.16.9.

(3) For developments greater then three storey's in height –

(a) waste chutes, recycling containers and hoppers are provided for the transport of waste from each residential floor level to the internal waste and recycling storage room and are –
(i) accessible for use by all dwelling units on each floor;
(ii) hygienic and easily serviced;
(iii) insect and vermin proof;
(iv) constructed and located to minimise noise, odour and vibration impacts on uses, occupiers and neighbours of the premises;
(v) complies with internal waste and recycling rooms section 9.16.7 and waste chutes and hoppers section 9.16.8.

9.16.4 Waste Storage - Commercial Industrial and Other Uses

(1) A storage area(s) is provided for all waste and recycling containers, that -

(a) is large enough to store the number of waste and recycling containers, being bulk bins or wheelie bins, equivalent in volume to the appropriate type of premises in Table 1 – Typical waste generation rates;

(b) is dedicated for the storage of waste and recycling containers and associated equipment only;

(c) is either an external waste and recycling storage enclosure that complies with section 9.16.6 or an internal waste and recycling storage room that complies with section 9.16.7

(d) allows for 0.5m space around containers for manoeuvrability and cleansing;

(e) has separate access for container retrieval and occupant use;

(f) has a smooth hardstand surface that will permit easy bin movement, not including asphaltic concrete;

(g) is fitted with bump rails to prevent bins from contacting walls;

(h) is both a storage area and a service point when bulk bins greater than 1.5m^3 are used;

(i) is both a storage area and a service point of is positioned within 20m of the service point when bulk bins 1.5m^3 or less are used;

(j) is not located immediately adjacent to living and eating areas of any unit or neighbouring property;

(k) complies with waste servicing section 9.16.9.

9.16.5 Waste Storage - Mixed Use

(1) Residential dwelling units are provided with a centralised waste and recycling storage area that is separate and additional to a centralised waste and recycling storage area for the commercial use;

(2) Each residential and commercial waste and recycling storage area -

(a) is large enough to store the number of waste and recycling containers, being bulk bins or wheelie bins, equivalent in volume to the appropriate type of residential and commercial premises in Table 1 – Typical waste generation rates;

(b) is dedicated for the storage of waste and recycling container and associated equipment only;

(c) is either and external waste and recycling storage enclosure that complies with section 9.16.6 or an internal waste and recycling storage room that complies with section 9.16.7;

(d) allows for 0.5m space around containers for manoeuvrability and cleansing;

(e) has separate access for container retrieval and occupant use;

(f) has a smooth hardstand surface that will permit easy bin movement, not including asphaltic concrete;

(g) is fitted with bump rails to prevent bins from contacting walls;

(h) is both a storage area and a service point when bulk bins greater than 1.5m^3 are used;

(i) is both a storage area and a service point of is positioned within 20m of the service point when bulk bins 1.5m^3 or less are used;

(j) is not located immediately adjacent to living and eating areas of any unit or neighbouring property;

(k) complies with waste servicing section 9.16.10.

9.16.6 External Waste and Recycling Storage Enclosures

(1) For external waste and recycle storage enclosures -

(a) container area screened from residential and public assessable areas through design and landscaping;

(b) has a roller door or outwardly opening gates that can be bolted open greater than 90 degrees;

(c) if roofed, have a minimum ceiling height of 2.4m and be adequately ventilated;

(d) if intended to be both wash-down and storage enclosure, complies with waste container cleansing section 9.16.7.

9.16.7 Internal Waste and Recycling Storage Rooms

(1) For internal waste and recycling storage rooms -

(a) doors are close fitting, self closing and wide enough for bulk bin access and manoeuvrability;

(b) walls, doors and roof are constructed and lined with a non-combustible and impervious material with a smooth finish and a fire resistance of one hour;

(c) the junctions of walls with floors are covered and artificial lighting provided;

(d) door frames are made of metal, hardwood, or metal clad softwood and are rebated with a lock capable of being activated form within the room without a key at all times;

(e) a hose-cock and adequate length of hand hose of minimum internal diameter 12 mm is provided immediately outside the room;

(f) unless refrigerated below four degrees Celsius, the room has an approve mechanical exhaust system for ventilation or permanent, unobstructed natural ventilation openings direct to the external air not less one-twentieth (1/20th) of the floor area. One half of such openings shall be situated at or neat the floor level, and one half at or near the ceiling level;

(g) fitted with automatic sprinklers or other system for the control of fire which meets Australian Standards;

(h) are fly and vermin proof;

(i) has smooth flooring that is graded and drained to a trade waste outlet located outside to the waste room and as close to the doorway as possible, or otherwise to the satisfaction of the local government;

(j) is designed and constructed to prevent stormwater and surface water from entering the waste room;

(k) has all conduits concealed in the floor, wall or ceilings;

(l) refrigerated waste rooms are fitted with an approved alarm device that is located outside, but controlled only from within the waste room.

9.16.8 Waste Chutes and Hoppers

(1) Waste chutes -

(a) are cylindrical with a minimum diameter of 450mm;

(b) have a bottom edge that finishes at least 25mm below the level of the ceiling in the waste room, with a maximum 300mm between chute edge and any extension thereof and the top of the container;

(c) are vertical throughout the length up to the highest hopper;

(d) discharge centrally above the waste container or compactor in the waste room;

(e) continued in full bore above the roof of the building, or not less than 600mm above the highest hopper;

(f) are fully supported at each floor level;

(g) are continued in fire rated shafts in compliance with the appropriate standards;

(h) has chute pipes with access provided at appropriate levels and a nylon brush of similar appliance on a pulley system, for clearing obstructions and cleansing;

(i) has a ventilation system to ensure that air does not flow from the chute through service opening or impede the downward movement of waste;

(j) where the chute is not continued to the full height if the building, a vent of non-combustible material having a minimum diameter of 150mm is provided. Such vent is carried to a point of at least 2 metres above the eaves of the building or the eaves of any building within 10 metres;

(k) has a shutter fitted for closing off the chute in the case of fire or when the waste container is withdrawn. The shutter is self-closing, constructed of galvanized steel sheet or other approved metal and fitted with a fusible link for automatic operation in the case of a fire in the waste container or waste room.

(2) Waste hoppers -

(a) close off the opening in the chute when the hopper is opened for loading;

(b) automatically return to a closed position after use;

(c) are located between 1.0m and 1.5m above floor level;

(d) has a service opening that does not exceed 75% of the diameter if the chute;

(e) permit free flow of waste into the chute and do not project waste into the chute;

(f) are designed and constructed to enable easy cleansing, including a surround on the wall around the hopper of at least 300mm wide;

(g) has a floor surface below the hopper that is paved with a hard, impervious material with a smooth finish.

9.16.9 Waste Servicing

(1) For uses with ten waste and recycle wheelie bins or less provide –

(a) on-street servicing points for the containers using the kerbside dedicated to the use, if sufficient kerbside space is available;

(b) one metre of unobstructed kerbside length per wheelie bin, excluding driveways, carparks and landscaping.

(2) For uses with greater than ten waste and ten recycle wheelie bins; or with bulk bins provide –

(a) off-street servicing points for the containers where the entire refuse collection vehicle is positioned within the site;

(b) internal access roads that enable refuse collection vehicles to enter and exit the site in a forward gear and have adequate vertical clearance;

Note -

Ensuring that the waste collection vehicles enter and exit the site in a forward gear represents best practice waste collection.

(c) maximum surface gradient of 1:20 (5%) for container servicing and refuse collection vehicle manoeuvring;

(d) for wheelie bins, one metre of unobstructed internal kerbside length per wheelie bin, excluding driveways, carparks and landscaping;

(e) for bulk bins, and unobstructed internal servicing point that -
(i) is also a waste storage area; or
(ii) if bins 1.5m^3 or less are used, is located within 20m of the waste storage area; or
(iii) has a hardstand surface for bin movement that is smooth in texture, not including asphaltic concrete.

9.16.10 Waste Container Cleansing

(1) Cleansing of all waste and recycling containers is conducted to minimise impacts on the environment, occupiers and neighbours of the premises.

(2) A bin wash-down bay -

(a) is incorporated into the waste storage area or is located so that waste and recycling containers can be easily moved to the wash-down bay;

(b) has a hardstand area suitably drained to a trade waste outlet or otherwise to the satisfaction of the local government;

(c) has a hose and cock located within the vicinity of the bay.

(3) Where no on site waste/recycling bin cleansing facilities are provided, a written agreement is made with a private cleansing contractor for the purpose of cleansing the containers, to the satisfaction of the local government.

9.16.11 Waste Reduction During Construction

(1) Inclusion of recycled and recyclable materials is considered in the design wherever possible.

(2) At least 50 percent of the excavation, construction, demolition and green wastes are diverted from landfill to conserve resources and the process is outlined in a waste management plan. The waste management plan must specify the intended place for the disposal of each type of waste material. Note: no facility exists on the Southern Moreton Bay Islands or North Stradbroke Island for the disposal of commercial construction and demolition waste.

(3) A report is submitted to the local government once the development is commissioned, detailing the total waste generation of the development, tonnages diverted from landfill, through avoidance, reuse and recycling, and waste transported to landfill.

(4) Identify waste streams that can be reused or recycled, and provide the storage area for separating these materials on site, such as mulching green organics and timber for landscaping, reusing clean fill, or crushing concrete and reusing as road base.

9.16.12 Preparation of Waste Management Plans

9.16.12.1 Scope

(1) This section applies to any assessable development where the application and/or proposal are supported by a Waste Management Plan (WMP).

9.16.12.2 Objective

(1) To provide a framework for the preparation and assessment of Waste Management Plans (WMP's).

9.16.12.3 Rationale

(1) The local government and the community share the responsibility of ensuring that the environment is protected and that resources are not used to the detriment of future generations. The responsible management of solid waste that is generated during construction and for the life and occupation of the development can result in significant economic, social and environmental benefits. WMPs allow developers to achieve –

(a) more sustainable use of resources;

(b) reductions and cost savings of waste disposed to landfill;

(c) more efficient, cost effective and safe waste collection practices for the life of the development;

(d) improved community perceptions and relations.

9.16.12.4 Guiding Principle

(1) The waste management hierarchy is a framework that is specified in the *Environmental Protection (Waste Management) Policy 2000* for prioritising waste management practices to achieve the best environmental outcome. The following waste management practices form the hierarchy and are listed in the preferred order of adoption –

(a) waste avoidance – preventing the generation of waste or reducing the generation of waste. Examples include better purchasing choices, design around standard product sizes and avoiding over-ordering of materials;

(b) waste reuse – reusing waste without substantially changing its form. Examples include reusing concrete, timber, bricks, wall tiles, roof tiles or greenwaste for a secondary purpose;

(c) waste recycling – treating waste that is no longer usable in its present form and using it to produce new products. Examples include recycling cardboard and metal and substituting products made from virgin materials for products made from waste materials;

(d) energy recovery from waste – recovering and using energy generated from waste. Examples include processing greenwaste through a cogeneration plant to produce energy;

(e) waste disposal – treating and disposing of waste in a manner that causes least harm to the environment. Examples include ensuring hazardous wastes are correctly disposed using a specialist waste disposal company who will treat the waste prior to landfilling.

9.16.12.5 Documentation of Waste Management Plans

(1) Where a WMP is requested to support a development application or required as a condition of the development approval, the plan may include but need not be limited to the following –

(a) an introduction that briefly describes –
- (i) the project to which it applies;
- (ii) why it has been written;
- (iii) the structure and scope;
- (iv) the objectives to be achieved;

(b) a definitions and references section, where any specific terms, acronyms and references are listed and defined;

(c) identification of wastes during –
- (i) construction and demolition stages –
  - a. describe the activities that may generate waste, for example demolition of buildings, excavation, tree clearing, construction of buildings or landscaping;
  - b. list the types and estimated volumes of waste material generated from each activity, including any hazardous characteristics, refer to Table 2 – Example identification of waste in the construction stage;
  - c. using the practices described in the waste management hierarchy, list how waste materials will be dealt with, refer to Table 2 – Example identification of waste in the construction stage
  - d. detail the intended place for disposal of each type of waste material.

Note -

No facility exists on the Southern Moreton Bay Islands or North Stradbroke Island for the disposal of commercial construction and demolition waste.

- (ii) occupation stage –
  - a. describe the type and estimated weekly volumes of waste material to be generated;
  - b. using the practices described in the waste management hierarchy, list how waste materials will be dealt with, refer to Table 3 – Example identification of waste in the occupation stage;

(d) identification of areas for waste materials to be separated and stored on site during each stage. Separating waste on site during construction and demolition saves money in disposal costs, increases recycling opportunities and lowers use of raw materials;

(e) the indicators or other criteria on which the performance of the WMP will be assessed;

(f) staff training guidelines to ensure that all sub-contractors and labourers on the premises are aware of the WMP and what their responsibilities are.

Table 1 -Typical waste generation rates

Type of Use	Waste Generation	Recycling Generation
Multiple Dwelling	140L or 240L wheelie bin/unit/week or a bulk bin volume as per RCC Corporate Policy (POL-2836) Waste and Recycling Collection Services	240L wheelie bin/unit/fortnight or a bulk bin volume as per RCC Corporate Policy (POL-2836) Waste and Recycling Collection Services
Apartment Building	A wheelie bin or bulk bin volume as per RCC Corporate Policy (POL-2836) Waste and Recycling Collection Services	A wheelie bin or bulk bin volume as per RCC Corporate Policy (POL-2836) Waste and Recycling Collection Services
Tourist Accommodation - ■ Backpacker Accommodation ■ Boarding House/Guest House	40L/bed/week 60L/bed/week	20L/bed/week 20L/bed/week
Bulky Goods Showroom	20L/100m^2/day	10L/100m^2/day
Commercial Office	10L/100m^2/day	10L/100m^2/day
Hotel	5L/bed/day 50L/100m^2/bar area/day 10L/1.5m^2 dining area/day	50L/100m^2/bar and dining area/day
Refreshment Establishment	120L/100m^2/day	120L/100m^2/day
Retail Warehouse	20L/100m^2/day	10L/100m^2/day
Shop ■ less than 100m^2 floor area ■ greater than 100m^2 floor area ■ supermarket	50L/100m^2/day 50L/100m^2/day 240L/100m^2/day	25L/100m^2/day 50L/100m^2/day 240L/100m^2/day
Bulky Goods Showroom	40L/100m^2/day	10L/100m^2/day
All other premises	As directed by the local government	As directed by the local government

Note -

These figures are estimate only and should only be used for guidance purposes.

Table 2 - Example identification of waste in the construction stage

Construction Stage				
Activity that generates waste	**Type of waste material (examples)**	**Estimated volume (m^3)**	**Hazardous characteristics**	**Specify use of waste material**
Demolition of building	Doors, windows, fittings	10 in total	NA	Reuse for second-hand building materials
	■ hardwood timber ■ other timber	■ $2m^3$ ■ $3m^3$	NA NA	■ Reuse for floorboards, fencing, furniture ■ Reuse for formwork, bridging, blocking and propping
	Metals (ferrous)	$5m^3$	NA	Recycling through scrap metal merchant
	Roof tiles	$80m^3$	NA	Reuse through being crushed for landscaping and driveways
Excavation	Clean fill	$300m^3$	NA	Reuse on another construction site for fill
	Soil/rubble mix	$100m^3$		Disposal after separating recyclable materials out of mix
Tree clearing	Greenwaste	$100m^3$	NA	■ Recycling by chipping material for landscaping use ■ Energy generation, where greenwaste that cannot be chipped is transported to a waste energy facility
Construction	Bricks	$2m^3$	NA	Reuse at another building site
	Concrete	$100m^3$	NA	Reuse for filling, levelling and road base
	Paints	$0.5m^3$	Paint tins with greater than 5 percent liquid paint residue should not be disposed to landfill	■ Avoiding disposal by allowing local art groups to use leftovers ■ Disposal of paint tins with greater than 5 percent liquid paint residue to be via licensed regulated waste transporter and landfill

Table 3 - Typical waste and recycling container dimensions

Container Type	Volume	Height	Width	Lengths
Wheelie Bin	240L	110mm	580mm	740mm
Bulk bin	660L	1300mm	900mm	1400mm
Bulk bin	1100L	1500mm	1300mm	1400mm
Bulk bin	1.5m^3	1100mm	1000mm	2100mm
Bulk bin	2.3m^3	1200mm	1500mm	2100mm
Bulk bin	3.0m^3	1600mm	1500mm	2100mm
Bulk bin	4.5m^3	1700mm	1600mm	2100mm

Note –

These figures are estimates only and should only be used for guidance purposes.

Table 4 - Example identification of waste in the occupation stage

Occupation Stage			
Type of waste material (examples)	**Estimated weekly volume (m^3)**	**Proposed onsite storage and treatment facilities**	**Method of dealing with waste material**
Food waste	1.5m^3	Industrial bin in a dedicated waste storage area	Disposal to landfill by a waste transporter
Cardboard	5m^3	Waste compactor in a dedicated waste storage area	Recycling by a cardboard recycling company
Household recyclables	0.5m^3	Two wheelie bins in a dedicated waste storage area	Recycling by a glass recycling company
General waste (non-recyclable)	2.0m^3	Eight wheelie bins in a dedicated waste storage area	Disposal to landfill by a waste transporter

Non-RSC Standard Drawings

Note -

A number of the standard drawings referenced in the Redland Planning Scheme nave not been prepared by Council. Non-RSC standard drawings referred to in the planning scheme (see below) may be located at the following web addresses.

Referenced Plan Number	IPWEA (Institute of Public Works Engineers Australia)
R-0180	Flexibeam Guardrail
R-0181	Flexibeam Guardrail Components
G-0044	Fencing Tubular Steel Fencing with & without Chain Wire
G-0045	Fencing Weldmesh Fencing & Control Fence
D-0001	Index Standard Drawings Drainage
D-0010	Stormwater Access Chamber Details DIA 1050 to 2100
D-0011	Access Chamber Roof Slabs DIA 1050 to 2100
D-0012	Access Chamber Roof Slabs DIA 1500 Extended 600 and 900
D-0013	Access Chamber Roof Slab – Rectangular Standard Reinforcement
D-0014	Access Chamber Cast Iron Cover & Frame – Concrete Filled Cover
D-0015	Access Chamber Cast Iron Cover & Frame Bolt Down
D-0016	Access Chamber Step Irons
D-0017	Access Chamber Roof Slab – Rectangular Fabric Reinforcement
D-0050	Field Inlet and Overflow Gully Type 1 & Type 2
D-0067	Precast Stormwater Inlet
W-0010	Air Valve Pit DIA 50 and DIA 80 Air Valves

IPWEA plans referred to above can be found at the following web address:

http://www.ipwea.org.au/AM/Template.cfm?Section=Queensland_Publications&Template=/CM/HTMLDisplay.cfm&ContentID=3376

Referenced Plan Number	Department of Main Roads (QLD)
MR 1356	Timber and Tubular Steel Post and Installations Details

DMR plans referred to above can be found at the following web address:

http://www.mainroads.qld.gov.au/web/AttachStore.nsf/allobjects/Standard%20Drawings%20Roads%20Manual%20-%201356/$file/SDRM_1356.pdf

Referenced Plan Number	WSAA (Water Services Association of Australia)
WAT-1300	Valve and Hydrant Identification

WSAA plans referred to above can be found at the following web address:

http://www.wsaa.asn.au

Std. Dwg. No.	Descriptions
	Redland Shire Council Approved Standard Drawings
	IPWEAQ Drawings
R-0180	Flexibeam Guardrail, Layout and Installation
R-0181	Flexibeam Guardrail, Components
R-0084	Kerb Ramp
R-0131	Traffic Control Devices
R-0141	Subsoil Drainage Details at Medians/Islands
	Qld. Gov. Dept. of Main Roads Standard Drawings
	All D.M.R. Drawings listed in the IPWEAQ index standard drawing number R-0001 are approved, plus MR1446 – Ramped Pedestrian Crossing and MR 1447 – Ramped and Cut Through Pedestrian Crossings
	Redland Shire Council Drawings
R-RSC-2	Residential Driveway Crossover for Kerb and Channel
R-RSC-3	Commercial/Industrial/Multiple Dwelling Driveway Crossover Type A
R-RSC-4	Commercial/Industrial Driveway Crossover Type B
R-RSC-5	Concrete Footpaths
R-RSC-6	Kerbs and Channels Profiles and Dimensions Incl. Edge Restraints, Median & Invert
R-RSC-7	Kerb & Channel Drainage Connections
R-RSC-8	Footpath Profile Policy
R-RSC-9	Public Utilities in Road Reserves – Typical Service Corridors and Alignments
R-RSC-10	Public Utilities in Road Reserves – Typical Service Conduit Sections
R-RSC-11	Street Name Sign
R-RSC-12	Sub Surface Drainage
R-RSC-13	Water Service Conduits
R-RSC-15	Road Types and Minimum Road Widths
R-RSC-16	Domestic Driveway Crossover for Pipe Crossing
R-RSC-21	Intersection Concrete Invert Details

D	AMENDED	5/05	
C	AMENDED	1/02	
B	AMENDED	1/99	
A	ORIGINAL ISSUE	1/98	
REVISIONS		DATE	APPROVED

© REDLAND SHIRE COUNCIL

DISCLAIMER. The authors shall have no liability or responsibility to the user or any other person or entity with respect to any liability, loss or damage caused or alleged to be caused, directly or indirectly, by the adoption and use of these Standard Drawings including, but not limited to, any interruption of service, loss of business or anticipatory profits, or consequential damages resulting from the use of these Standard Drawings. Persons must not rely on these Standard Drawings as the equivalent of, or a substitute for, project-specific design and assessment by an appropriately qualified professional.

Redland SHIRE COUNCIL

INDEX
STANDARD DRAWINGS
ROAD/STREET

ROAD/STREET
Standard Drawing
R-RSC-1

A B C D

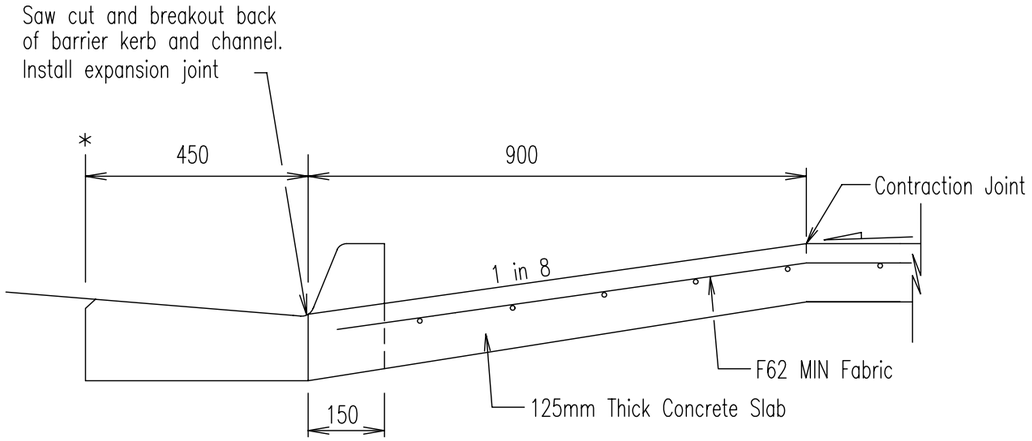

BARRIER KERB & CHANNEL – TYPE B1

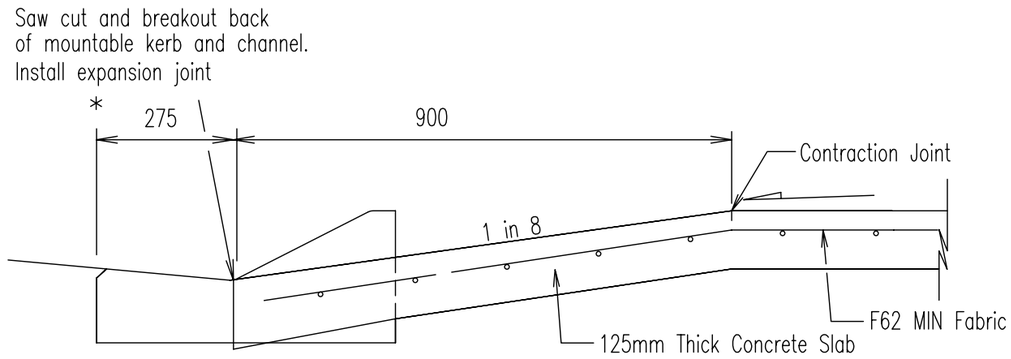

MOUNTABLE KERB & CHANNEL – TYPE M1

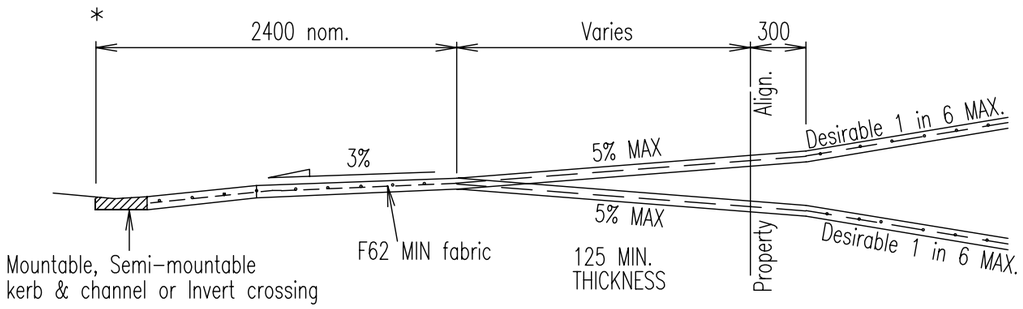

SECTION A–A

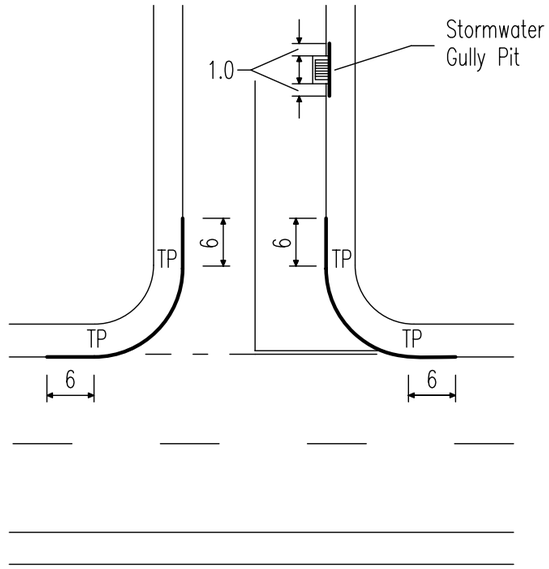

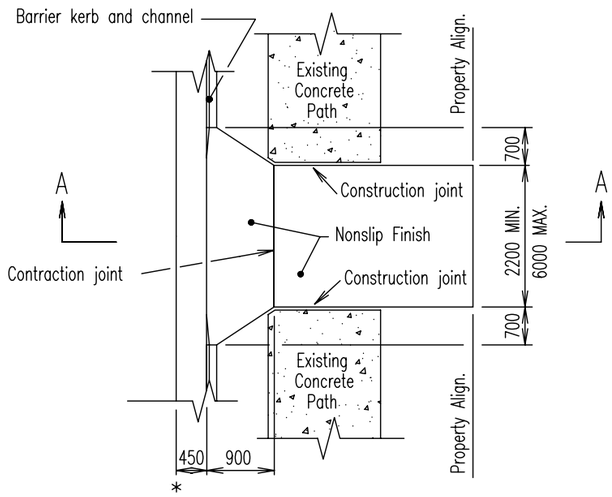

SLAB ABUTTING CHANNEL INVERT
BARRIER KERB AND CHANNEL

Prohibited Locations shown in a heavy line.
All Dimensions are in Metres.

LEGEND

* Lip Line for Setting Out

NOTES:

1. Crossings are not designed for commercial vehicles.
2. Reprofile and turf adjacent footpath to finish flush with driveway. Footpath earthworks adjoining concrete must be well compacted.
3. Where concrete paths exist, sawcut and grade smoothly to driveway crossover and join with expansion joint
4. Concrete surface tolerance to be $^{+5mm}_{-0mm}$, over 3 metre sections.
5. Concrete N25 in accordance with AS 1379 and AS 3600.
6. Reinforcement fabric to AS 4671, 50 top and edge cover, lap fabric 250.
7. Approved materials for construction :– Concrete or Paving blocks on 100mm minimum concrete with F62 mesh. Refer project drawings.
8. Expansion joints to be 10 thick, full depth closed cell cross linked polyethylene foam (85 – 150 kg/m)
9. Other kerb and channel types shall have the same construction treatment as shown on this drawing.
10. All reinforcing mesh shall be supported on bar chairs.
11. Driveways are not to be constructed within 1m of a stormwater gully pit.
12. Galvanised steel dowels, 12mm dia, 250mm long and spaced at 500mm are used when joining to concrete paths to ensure a flush joint is maintained
13. Reinforcing mesh to be cut at construction joint
14. All dimensions in millimetres.
15. Design Standard for Self–assessable development. Widths in excess of 6000mm (6 metres), will require a code assessable Development Application, (see Part 7 Division 4 – Domestic Driveway Crossover Code).

F	AMENDED	12/07	
E	AMENDED	7/05	
D	AMENDED	2/03	
C	AMENDED	1/02	
B	AMENDED	1/99	
A	ORIGINAL ISSUE	1/98	
REVISIONS		DATE	APPROVED

© REDLAND SHIRE COUNCIL

DISCLAIMER. The authors shall have no liability or responsibility to the user or any other person or entity with respect to any liability, loss or damage caused or alleged to be caused, directly or indirectly, by the adoption and use of these Standard Drawings including, but not limited to, any interruption of service, loss of business or anticipatory profits, or consequential damages resulting from the use of these Standard Drawings. Persons must not rely on these Standard Drawings as the equivalent of, or a substitute for, project–specific design and assessment by an appropriately qualified professional.

Redland SHIRE COUNCIL

DOMESTIC DRIVEWAY CROSSOVER FOR KERB AND CHANNEL

F

ROAD/STREET

Standard Drawing

R–RSC–2

A B C D E

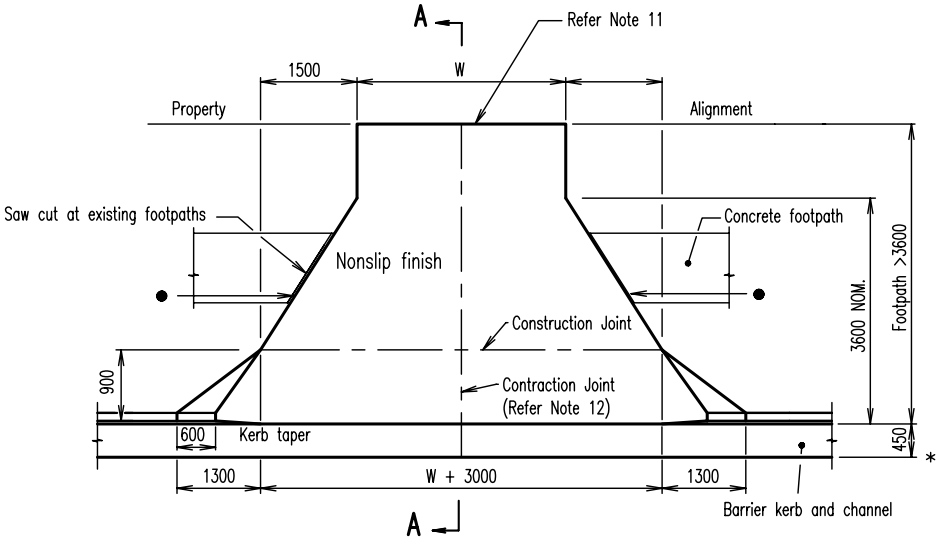

PLAN – WIDE FOOTPATHS

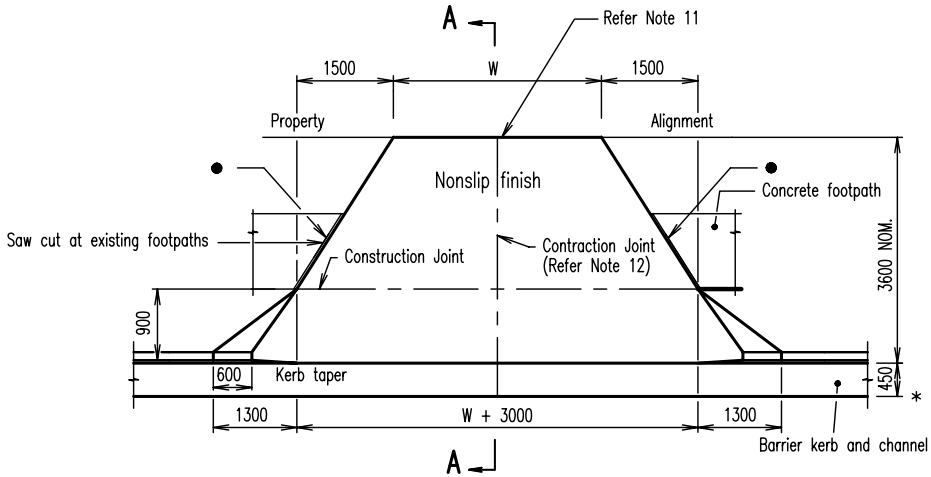

PLAN – 3.6m FOOTPATH

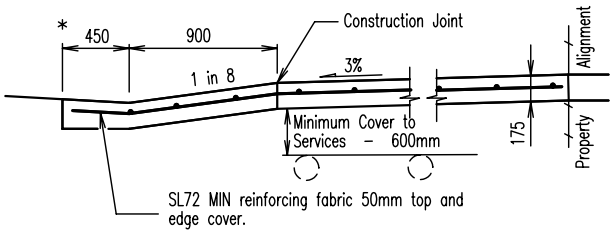

SECTION A – A

LEGEND

* Lip Line

● Expansion joints to be 10 thick, full depth closed cell cross linked polyethylene foam (85 – 150 kg/m³). Also refer Note 12.

NOTES:

1. Concrete N25 in accordance with AS 1379 and AS 3600.
2. Reinforcing fabric to AS 4671. Lap fabric 250mm.
3. Depths of concrete and reinforcing steel shown are the minimum requirements for good foundation conditions, and average traffic loading. Where this does not apply, depths of concrete and reinforcing shall be increased to suit specific conditions.
4. Design of crossings may vary, refer project drawings.
5. Dimension W, 3.0m One way, 5.5m Two way, refer specification or project drawings.
6. Reprofile adjacent footpath to match driveway,as directed by Redland Shire Council. Footpath earthworks adjoining concrete must be well compacted.
7. Existing footpath profile to be maintained where possible.
8. Compaction for subgrade 95% Standard to AS 1289.5.1.1.
9. Where subgrade is less than CBR 5 excavate and provide imported material to satisfaction of the Superintendent.
10. The driveway shall be concrete unless otherwise approved.
11. Gully pits may be provided on each side inside the property boundary when discharging to street underground drainage. Alternatively, a grated drain may be provided on the side of the property boundary. Refer project Drawings.
12. Galvanised steel slip dowels, 12mm dia, 250mm long and spaced at 500mm are used when joining to concrete paths to ensure a flush joint is maintained.
13. Contraction joints are required at 3 to 4.5m centres.
14. All reinforcing mesh shall be supported on bar chairs.
15. This drawing indicates the minimum standard required unless otherwise specified in the development approval.
16. All dimensions in millimetres.

D	AMENDED	7/05	
C	AMENDED	1/02	
B	AMENDED	1/99	
A	ORIGINAL ISSUE	1/98	
REVISIONS		DATE	APPROVED

© REDLAND SHIRE COUNCIL

DISCLAIMER. The authors shall have no liability or responsibility to the user or any other person or entity with respect to any liability, loss or damage caused or alleged to be caused, directly or indirectly, by the adoption and use of these Standard Drawings including, but not limited to, any interruption of service, loss of business or anticipatory profits, or consequential damages resulting from the use of these Standard Drawings. Persons must not rely on these Standard Drawings as the equivalent of, or a substitute for, project-specific design and assessment by an appropriately qualified professional.

Redland SHIRE COUNCIL

COMMERCIAL / INDUSTRIAL/ MULTIPLE DWELLING / APARTMENT BUILDING DRIVEWAY CROSSOVER (TYPE A)

ROAD/STREET

Standard Drawing

R–RSC–3

A B C D

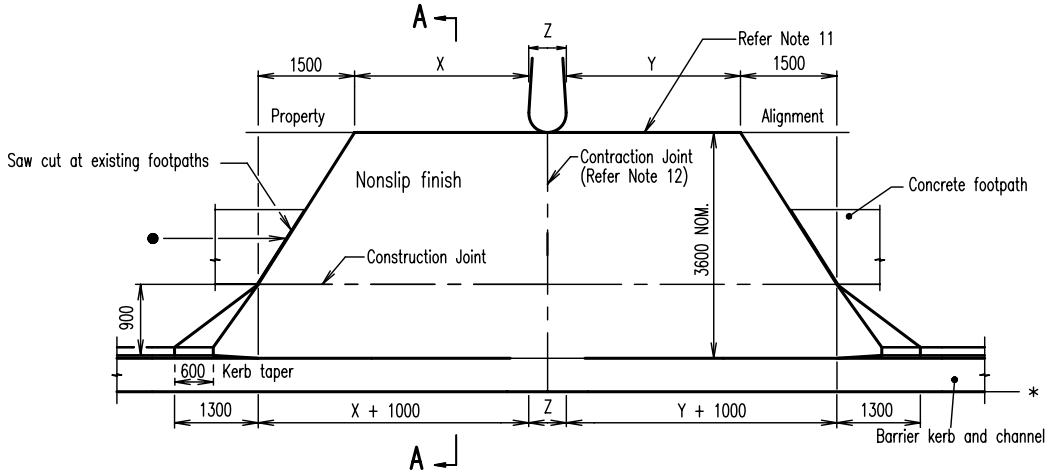

PLAN – 3.6m FOOTPATH

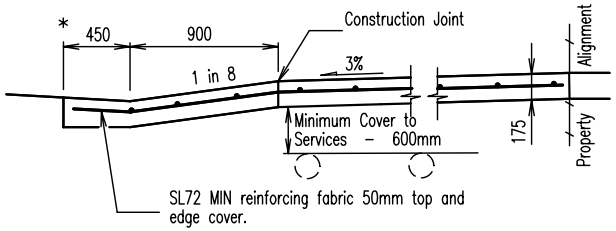

SECTION A – A

LEGEND

* Lip Line

● Expansion joints to be 10 thick, full depth closed cell cross linked polyethylene foam (85 – 150 kg/m³). Also refer Note 12.

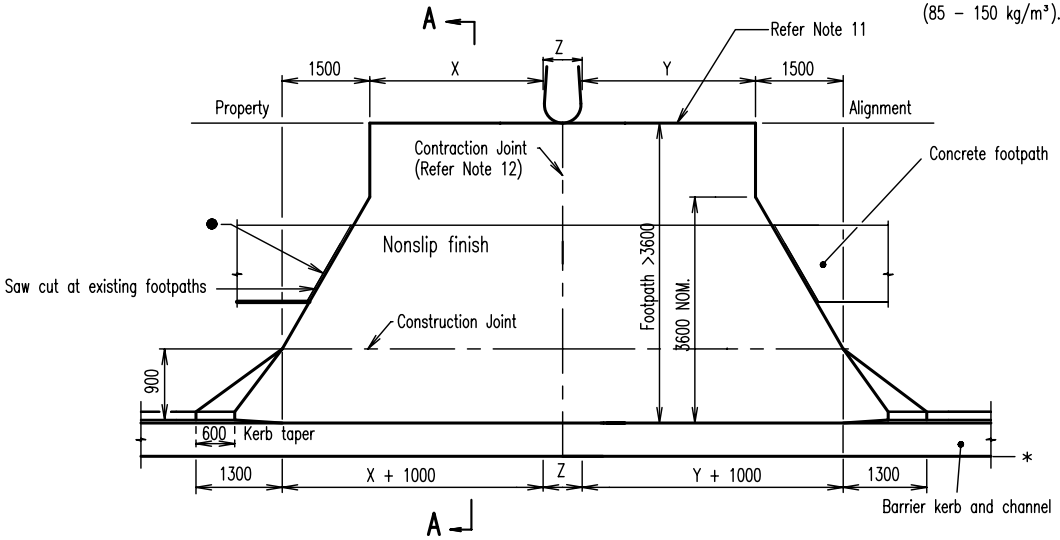

PLAN – WIDE FOOTPATHS

NOTES:

1. Concrete N25 in accordance with AS 1379 amd AS 3600.
2. Reinforcing fabric to AS 4671. Lap fabric 250mm.
3. Depths of concrete and reinforcing steel shown are the minimum requirements for good foundation conditions, and average traffic loading. Where this does not apply, depths of concrete and reinforcing shall be increased to suit specific conditions.
4. Design of crossings may vary, refer project drawings.
5. Dimensions X, Y, & Z , refer specification or project drawings. Unless otherwise specified X = 5500, Y = 4500 and Z = 1200
6. Reprofile adjacent footpath to match driveway, as directed by Redland Shire Council. Footpath earthworks adjoining concrete must be well compacted.
7. Existing footpath profile to be maintained where possible.
8. Compaction for subgrade 95% Standard to AS 1289.5.1.1.
9. Where subgrade is less than CBR 5 excavate and provide imported material to satisfaction of the Superintendent.
10. The driveway shall be concrete unless otherwise approved.
11. Gully pits may be provided on each side inside the property boundary when discharging to street underground drainage. Alternatively, a grated drain may be provided on the side of the property boundary. Refer project Drawings.
12. Galvanised steel slip dowels, 12mm dia, 250mm long and spaced at 500mm are used when joining to concrete paths to ensure a flush joint is maintained.
13. Contraction Joints are required in driveway at 3 to 4.5m centres.
14. All reinforcing mesh shall be supported on bar chairs.
15. This drawing indicates the minimum standard required unless otherwise specified in the development approval.
16. All dimensions in millimetres.

D	AMENDED	7/05	
C	AMENDED	1/02	
B	AMENDED	1/99	
A	ORIGNIAL ISSUE	1/98	
REVISIONS		DATE	APPROVED

© REDLAND SHIRE COUNCIL

DISCLAIMER. The authors shall have no liability or responsibility to the user or any other person or entity with respect to any liability, loss or damage caused or alleged to be caused, directly or indirectly, by the adoption and use of these Standard Drawings including, but not limited to, any interruption of service, loss of business or anticipatory profits, or consequential damages resulting from the use of these Standard Drawings. Persons must not rely on these Standard Drawings as the equivalent of, or a substitute for, project-specific design and assessment by an appropriately qualified professional.

Redland SHIRE COUNCIL

COMMERCIAL/INDUSTRIAL DRIVEWAY CROSSOVER (TYPE B)

Standard Drawing
R–RSC–4

A B C D

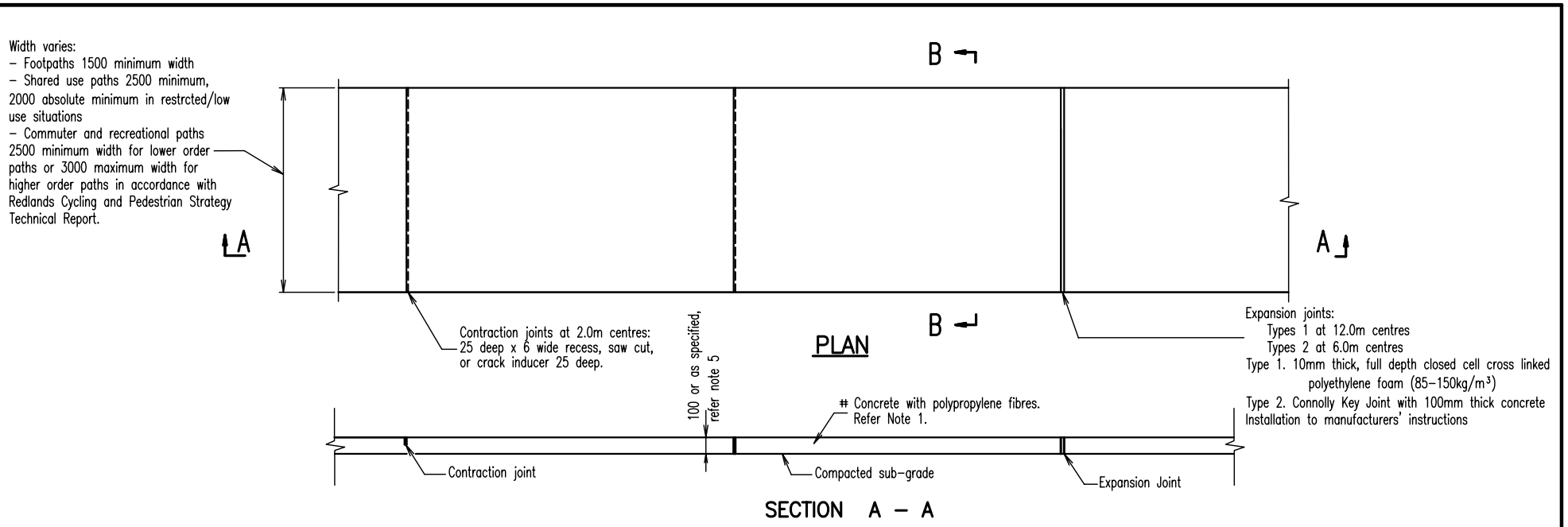

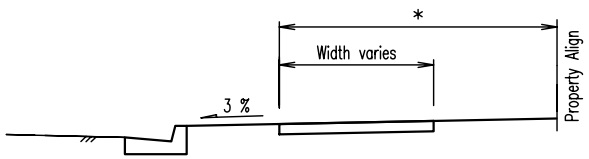

SECTION B–B

(Where kerb & channel exists)

FIBRE REINFORCED CONCRETE SPECIFICATION

The concrete shall be reinforced with a mixed dose of high performance polymer fibres and discreet graded fibrillated filament fibres. These fibres shall be provided as a coarse filament in an engineered contoured sinusoildal profile, of not less than 600 denier and discreet graded fibrillated filament fibres, of not greater than 6 denier. These fibres are to be manufactured from virgin polypropylene and added to the concrete, at the rate of 4.6kg per cubic metre. The 4.6kg shall consist of 3.8kg of HPP and 0.8kg of discrete graded fibrillated filament fibres.

LEGEND

* 2700 width for 4000 verge
Distance varies to provide adequate clearance to street light poles, trees and fixed objects on wider verges.

\# Alternative treatment without fibres, where specified by Council is SL62 reinforcing fabric, 50mm top edge cover, supported on bar chairs. Also refer Note 5.

NOTES

1. Concrete N25 in accordance with AS 1379 and AS 3600. with polypropylene fibres incorporated into the concrete mix Refer Fibre Reinforced Concrete Specification
2. All concrete to be broom finished.
3. Contraction/expansion joints, 2m MAX spacing.
4. Finished surface tolerance to be maximum +6mm −0mm relative to kerb level and crossfall specified.
5. Thickness to be increased to 125mm at residential vehicular crossovers and through parks and reserves. Provide a contraction joint at both ends of crossover
6. Concrete footpaths, adjoining existing driveways are to be transitioned over a minimum 5.0m length.
7. Galvanised steel slip dowels, 12mm dia, 250mm long and spaced at 500mm are used wehn joining to existing concrete paths to ensure a flush joint is maintained.
8. A street opening permit must be obtained from Council, seek approval of location and levels prior to excavation.
9. All dimensions in millimetres.

D	AMENDED	8/05	
C	AMENDED	1/02	
B	AMENDED	1/99	
A	ORIGINAL ISSUE	1/98	
REVISIONS		DATE	APPROVED

© REDLAND SHIRE COUNCIL

DISCLAIMER. The authors shall have no liability or responsibility to the user or any other person or entity with respect to any liability, loss or damage caused or alleged to be caused, directly or indirectly, by the adoption and use of these Standard Drawings including, but not limited to, any interruption of service, loss of business or anticipatory profits, or consequential damages resulting from the use of these Standard Drawings. Persons must not rely on these Standard Drawings as the equivalent of, or a substitute for, project-specific design and assessment by an appropriately qualified professional.

Redland SHIRE COUNCIL

CONCRETE FOOTPATHS AND SHARED USE PATHS

ROAD/STREET

Standard Drawing

R–RSC–5

A B C D

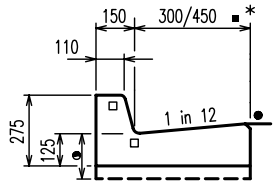

B1

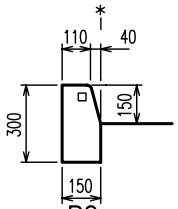

B2

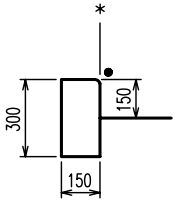

B3

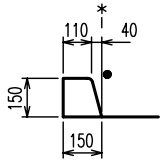

B4

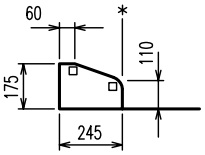

B5

BARRIER TYPE

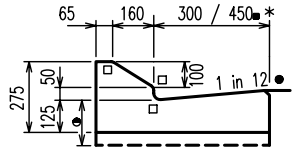

SM1

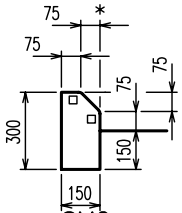

SM2

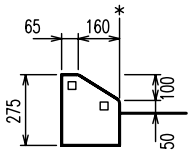

SM3

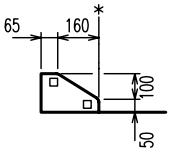

SM4

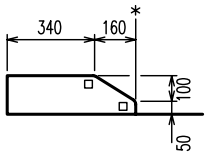

SM5

SEMI – MOUNTABLE TYPE

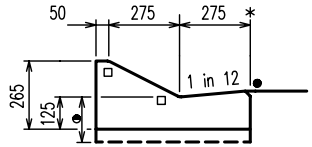

M1

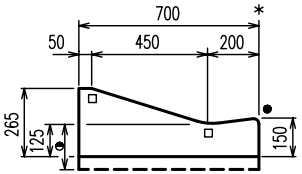

M2

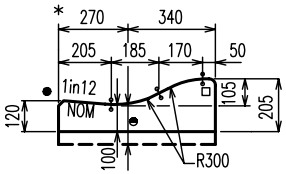

M3

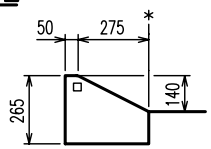

M4

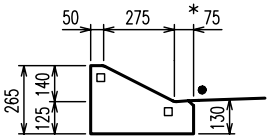

M5

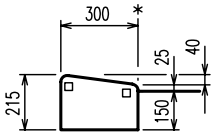

M6

MOUNTABLE TYPE

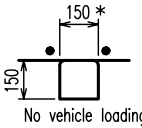

No vehicle loading

ER1

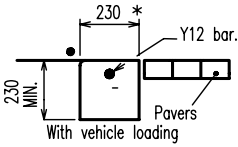

With vehicle loading

ER2

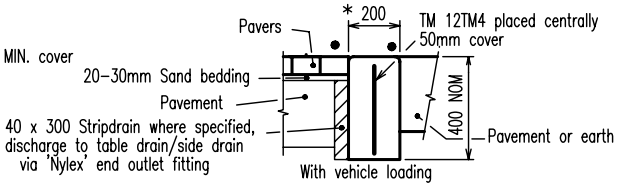

With vehicle loading

ER3

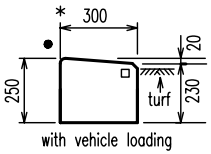

with vehicle loading

RSC–1

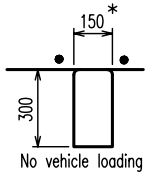

No vehicle loading

ER5

EDGE RESTRAINT

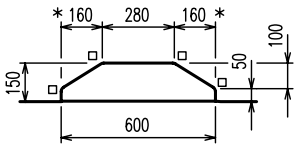

MEDIAN

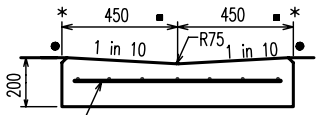

SL72 min reinforced fabric with
50mm top and edge cover

INVERT

LEGEND

- * Lip line for setting out.
- ▪ Channel, invert width – refer project drawings.
- ● 10mm Radius.
- ▫ 20mm Radius.
- ◓ 175 where specified for commercial and industrial applications, refer project drawings.

NOTES:

1. All materials and construction shall comply with AS 2876 except for dimensions on this drawing.
2. Concrete N25 MIN in accordance with AS1379 and AS 3600. Concrete shall contain fibrillated fibres, added at the rate of not less than 0.9kgs per m. The fibres shall not be more than 60 denier diameter and be made from 100% virgin polypropylene multifilament fibres. They shall not contain reprocessed olefin materials. fibres shall be homogeneously mixed throughout.
3. Reinforcement bars and trench fabric to AS 4671.
4. JOINTS: Contraction Joints to be cut through full depth of Kerb & Channel at 3m centres.
   : Expantion joints required at 30m centres and at tangent points of Kerb return. Provide 10mm thick full depth closed cell cross linked polyethylene foam (85–150kg/m³)
5. All kerbs, edge restraints and inverts are constructed on a 100mm thick CBR15 gravel base material which is to extend 150mm beyond the concrete edge
6. All dimensions in millimetres.

D	AMENDED	8/05	
C	AMENDED	1/02	
B	AMENDED	1/99	
A	ORIGINAL ISSUE	1/98	
REVISIONS		DATE	APPROVED

© REDLAND SHIRE COUNCIL

DISCLAIMER. The authors shall have no liability or responsibility to the user or any other person or entity with respect to any liability, loss or damage caused or alleged to be caused, directly or indirectly, by the adoption and use of these Standard Drawings including, but not limited to, any interruption of service, loss of business or anticipatory profits, or consequential damages resulting from the use of these Standard Drawings. Persons must not rely on these Standard Drawings as the equivalent of, or a substitute for, project-specific design and assessment by an appropriately qualified professional.

Redland SHIRE COUNCIL

KERBS AND CHANNELS PROFILES AND DIMENSIONS

INCL. EDGE RESTRAINTS, MEDIAN & INVERT

ROAD/STREET

Standard Drawing

R–RSC–6

A B C D

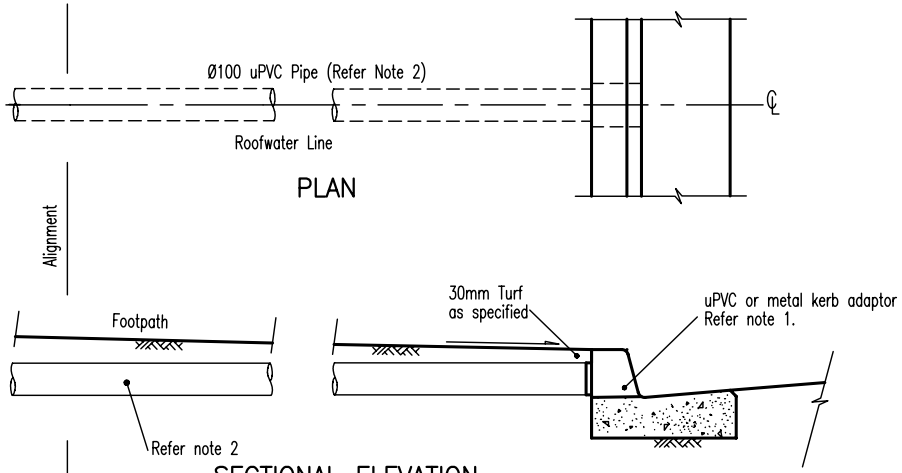

SECTIONAL ELEVATION
BARRIER KERB AND CHANNEL

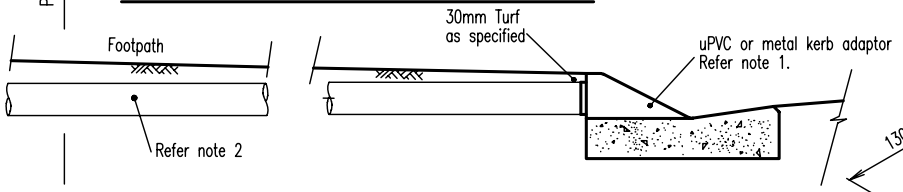

SECTIONAL ELEVATION
MOUNTABLE KERB AND CHANNEL

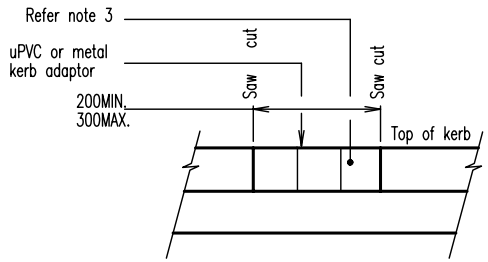

ELEVATION
EXISTING KERB AND CHANNEL

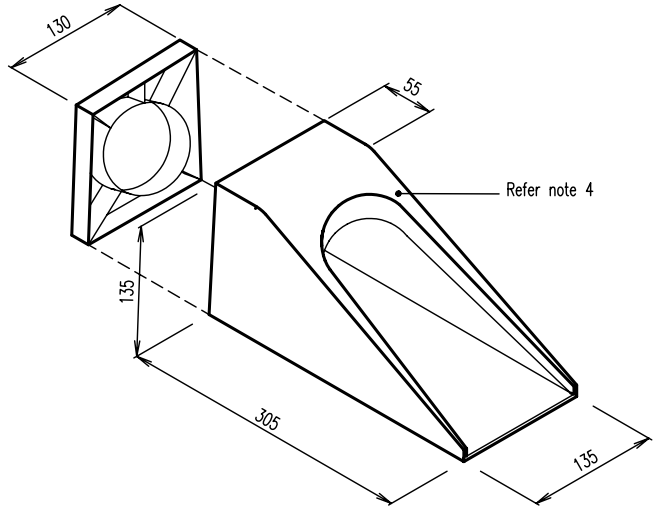

MOUNTABLE KERB ADAPTOR

Typical only Ø90 and Ø100 uPVC or metal

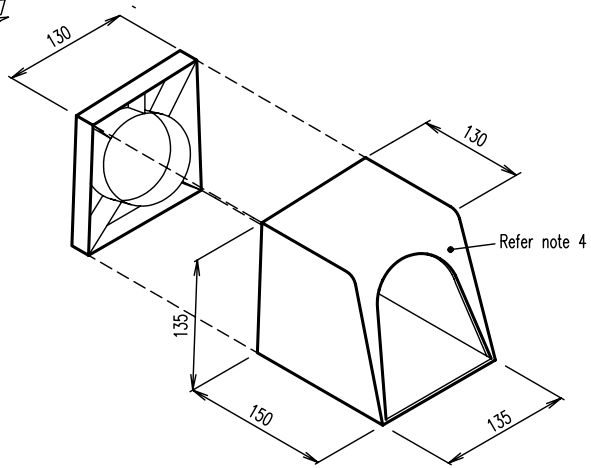

BARRIER KERB ADAPTOR

Typical only Ø90 and Ø100 uPVC or METAL

NOTES

1. Standard Ø100 uPVC or metal adaptor to suit barrier or mountable type kerb and channel.
2. Pipe across footpath to be laid with the maximum available cover, and with a minimum grade of 1 in 80. UPVC sewer pipe min. class S.H. or equivalent shall be used in residential development. 125 x175 x 4 RHS hot dipped galvanized may be used in Commercial and Industrial developments with appropriate Kerb Adaptor.
3. At existing kerb and channel saw cut kerb as necessary. Reinstate with N20/10 concrete in accordance with AS 1379 and AS3600 to clean concrete faces.
4. Use kerb adaptors that match kerb profile.
5. Refer project drawings/specifications for option to be adopted.
6. At new developments seal inlet to adaptor.
7. All dimensions in millimetres.

B	AMENDED	1/02	
A	ORIGINAL ISSUE	1/98	
	REVISIONS	DATE	APPROVED

© REDLAND SHIRE COUNCIL

DISCLAIMER. The authors shall have no liability or responsibility to the user or any other person or entity with respect to any liability, loss or damage caused or alleged to be caused, directly or indirectly, by the adoption and use of these Standard Drawings including, but not limited to, any interruption of service, loss of business or anticipatory profits, or consequential damages resulting from the use of these Standard Drawings. Persons must not rely on these Standard Drawings as the equivalent of, or a substitute for, project-specific design and assessment by an appropriately qualified professional.

Redland SHIRE COUNCIL

KERB AND CHANNEL DRAINAGE CONNECTIONS

ROAD/STREET
Standard Drawing
R-RSC-7

A B

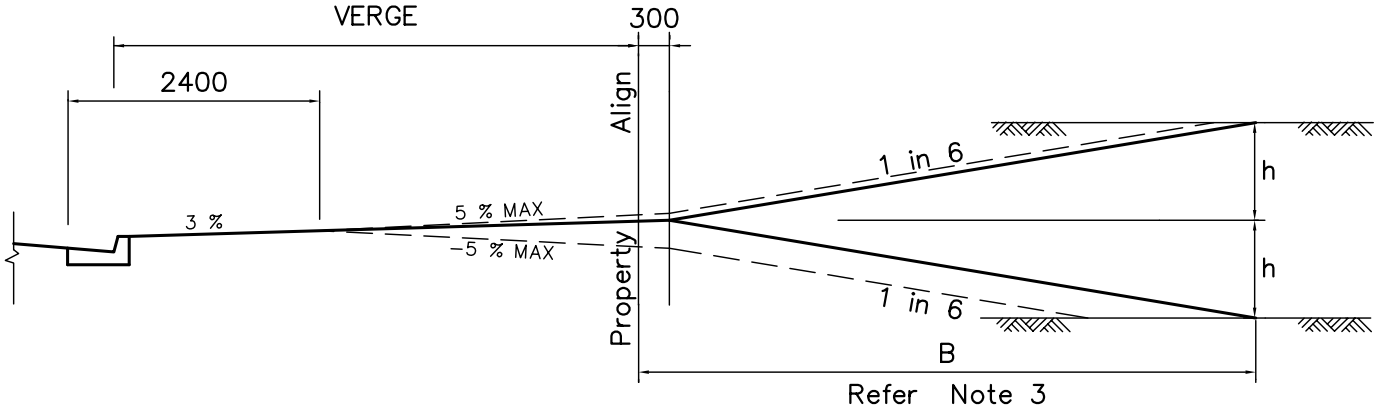

RESIDENTIAL FOOTPATH PROFILE & ADJOINING BATTER

Scale 1:50

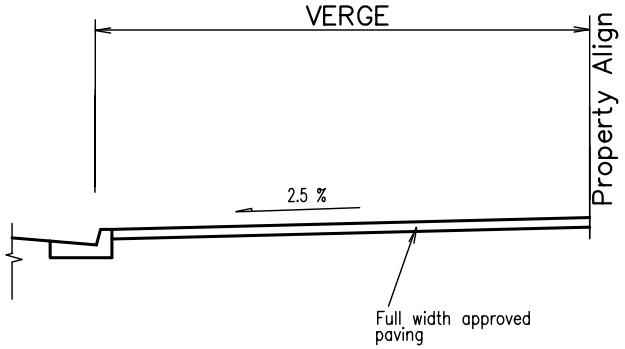

COMMERCIAL FOOTPATH PROFILE

NTS

NOTES

1. Where h < 750, a standard 3% footpath with 1 in 6 batter shall be adopted.
2. Where h > 750, a combination of 3% and + 5% Max. may be adopted for the footpath profile with 1 in 6 slopes in private property.
3. Where B > 6000 when adopting 1 in 6 batters they may be increased to 1 in 4 Max. with B constant at 6000.
4. Where h > 1500, 1 in 2 batters may be provided with access points to each property graded at 1 in 4.
   (Not to be adopted unless approved by the Manager Infrastructure Development.
5. Provide Topsoil and Turfing as specicfied.
6. All grades are to conform with regard to accessability to all members of the community.
7. Variations may be approved at the descretion of the Manager Infrastructure Develpment.
8. Paving type and pattern to be approved by Redland Shire Council.

B	AMENDED	1/99	
A	ORIGINAL ISSUE	1/98	
	REVISIONS	DATE	APPROVED

© REDLAND SHIRE COUNCIL

DISCLAIMER. The authors shall have no liability or responsibility to the user or any other person or entity with respect to any liability, loss or damage caused or alleged to be caused, directly or indirectly, by the adoption and use of these Standard Drawings including, but not limited to, any interruption of service, loss of business or anticipatory profits, or consequential damages resulting from the use of these Standard Drawings. Persons must not rely on these Standard Drawings as the equivalent of, or a substitute for, project-specific design and assessment by an appropriately qualified professional.

Redland SHIRE COUNCIL

FOOTPATH PROFILE POLICY

ROAD/STREET

Standard Drawing

R-RSC-8

A B

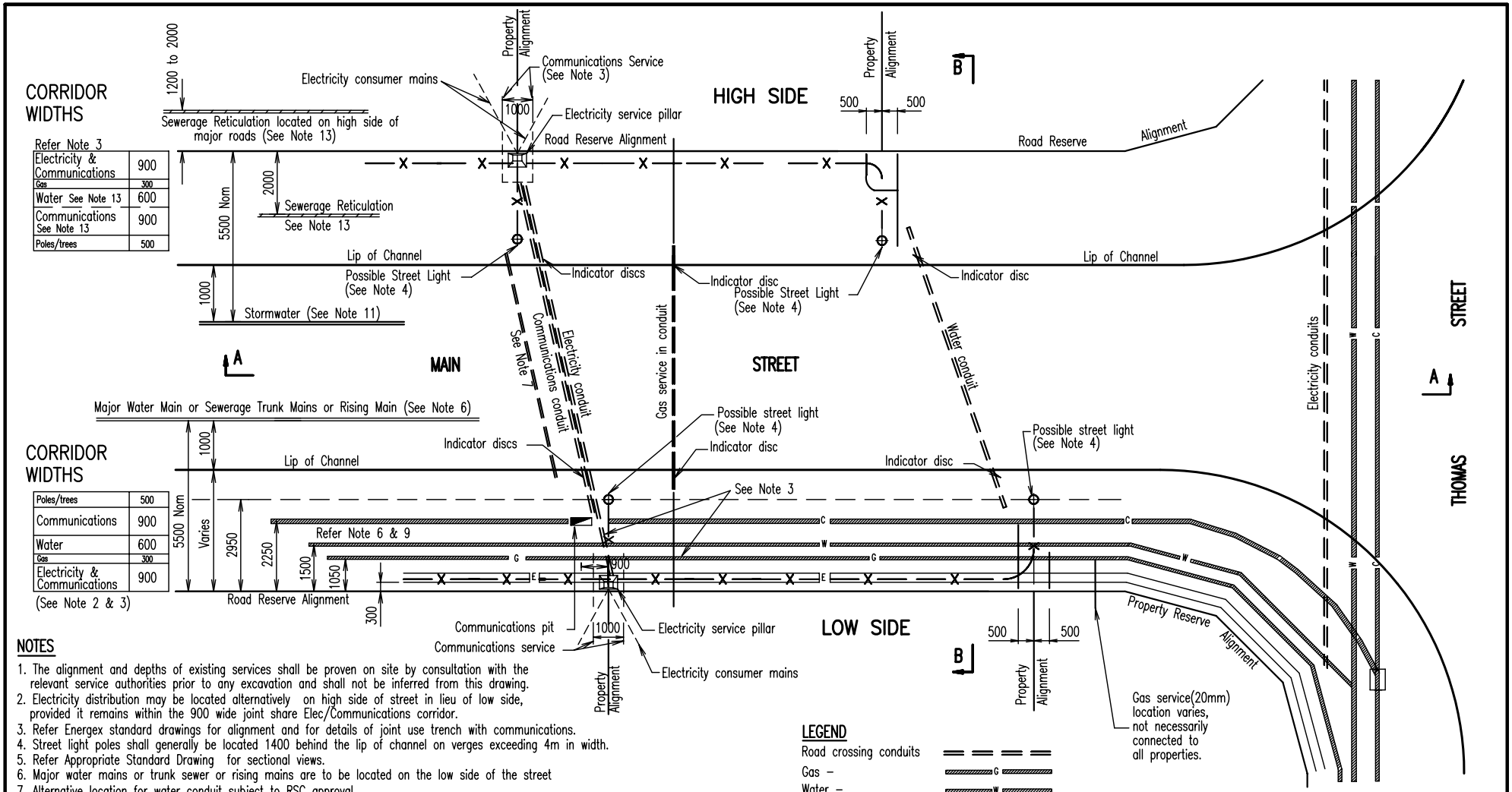

NOTES

1. The alignment and depths of existing services shall be proven on site by consultation with the relevant service authorities prior to any excavation and shall not be inferred from this drawing.
2. Electricity distribution may be located alternatively on high side of street in lieu of low side, provided it remains within the 900 wide joint share Elec/Communications corridor.
3. Refer Energex standard drawings for alignment and for details of joint use trench with communications.
4. Street light poles shall generally be located 1400 behind the lip of channel on verges exceeding 4m in width.
5. Refer Appropriate Standard Drawing for sectional views.
6. Major water mains or trunk sewer or rising mains are to be located on the low side of the street
7. Alternative location for water conduit subject to RSC approval.
8. Conduits to extend 600 beyond back of kerb or 300 beyond Concrete path where applicable.
9. Water mains are located on the low side of the street unless otherwise approved.
10. Trees not to be planted closer than 7000 from street lights.
11. Stormwater mains are located on the high side of the street under the kerb & channel where side inlet chambers are used.
12. Conduits to have a minimum 1000 separation.
13. Sewerage reticulation instead of Communications and Water is located on the verge on the high side of type A and B streets. (Road reserve widths of 18 metres or less). The location is 1200 to 2000 in private property on all higher order roads.
14. All dimensions in millimetres.

LEGEND

Road crossing conduits
Gas – G
Water – W
Sewerage – S
Communications – C
Electricity – E
Street light – X

REVISIONS		DATE	APPROVED
E	AMENDED	7/05	
D	AMENDED	11/03	
C	AMENDED	1/02	
B	AMENDED	1/99	
A	ORIGINAL ISSUE	1/98	

© REDLAND SHIRE COUNCIL

DISCLAIMER. The authors shall have no liability or responsibility to the user or any other person or entity with respect to any liability, loss or damage caused or alleged to be caused, directly or indirectly, by the adoption and use of these Standard Drawings including, but not limited to, any interruption of service, loss of business or anticipatory profits, or consequential damages resulting from the use of these Standard Drawings. Persons must not rely on these Standard Drawings as the equivalent of, or a substitute for, project-specific design and assessment by an appropriately qualified professional.

Redland SHIRE COUNCIL

PUBLIC UTILITIES IN ROAD RESERVES

TYPICAL SERVICE CORRIDORS AND ALIGNMENTS

ROAD/STREET
Standard Drawing
R–RSC–9
A B C D E

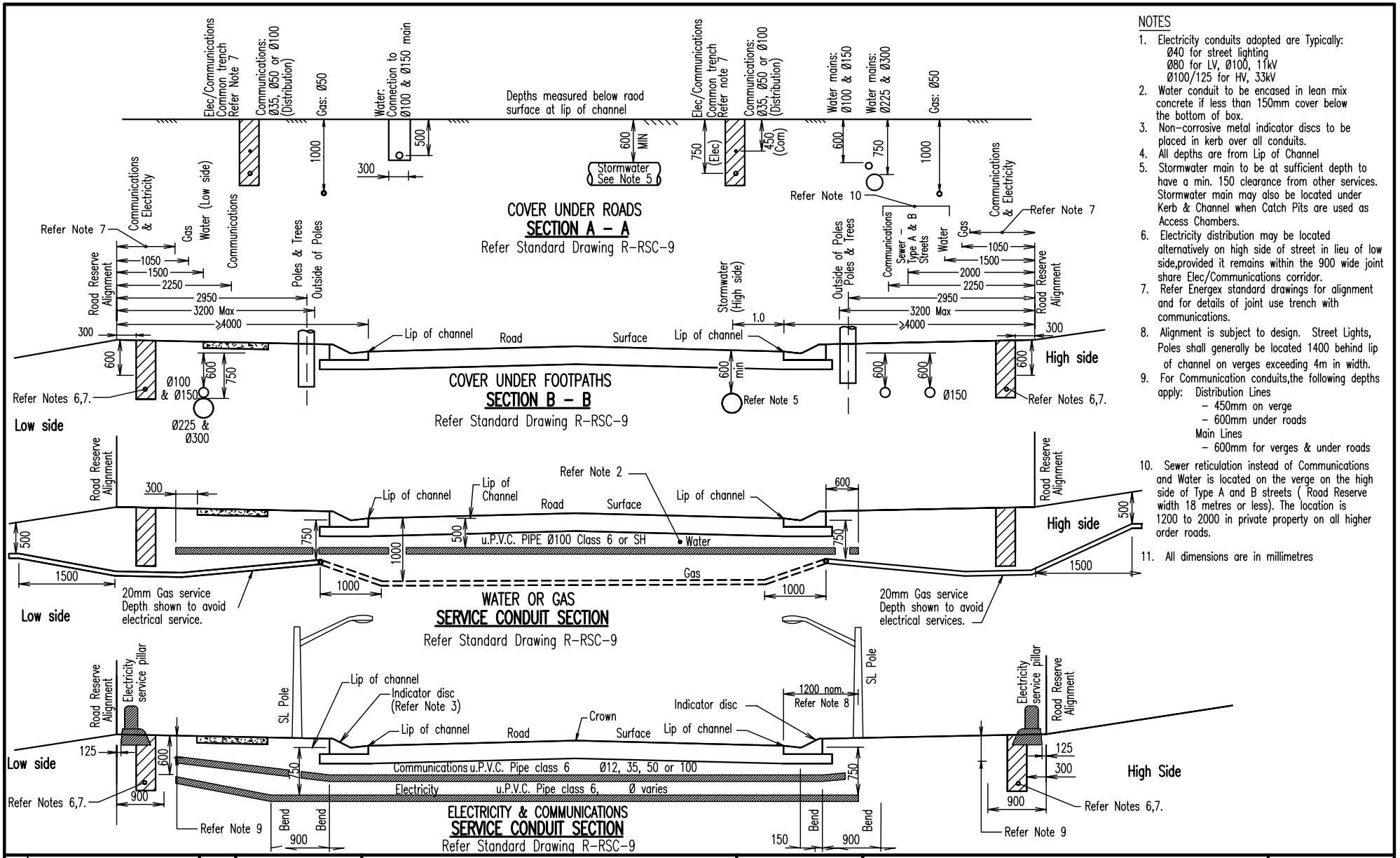

NOTES

1. Electricity conduits adopted are Typically:
   Ø40 for street lighting
   Ø80 for LV, Ø100, 11kV
   Ø100/125 for HV, 33kV
2. Water conduit to be encased in lean mix concrete if less than 150mm cover below the bottom of box.
3. Non-corrosive metal indicator discs to be placed in kerb over all conduits.
4. All depths are from Lip of Channel
5. Stormwater main to be at sufficient depth to have a min. 150 clearance from other services. Stormwater main may also be located under Kerb & Channel when Catch Pits are used as Access Chambers.
6. Electricity distribution may be located alternatively on high side of street in lieu of low side,provided it remains within the 900 wide joint share Elec/Communications corridor.
7. Refer Energex standard drawings for alignment and for details of joint use trench with communications.
8. Alignment is subject to design. Street Lights, Poles shall generally be located 1400 behind lip of channel on verges exceeding 4m in width.
9. For Communication conduits,the following depths apply: Distribution Lines
   – 450mm on verge
   – 600mm under roads
   Main Lines
   – 600mm for verges & under roads
10. Sewer reticulation instead of Communications and Water is located on the verge on the high side of Type A and B streets (Road Reserve width 18 metres or less). The location is 1200 to 2000 in private property on all higher order roads.
11. All dimensions are in millimetres

REVISIONS		DATE	APPROVED
E	AMENDED	7/05	
D	AMENDED	11/03	
C	AMENDED	1/02	
B	AMENDED	1/99	
A	ORIGINAL ISSUE	1/98	

© REDLAND SHIRE COUNCIL

SCLAIMER. The authors shall have liability or responsibility to the user or any other person or entity with respect to any liability, loss or damage caused or alleged to be caused, directly or indirectly, by the adoption and use of these Standard Drawings including, but not limited to, any interruption of service, loss of business or anticipatory profits, or consequential damages resulting from the use of these Standard Drawings. Persons must not rely on these Standard Drawings as the equivalent of, or a substitute for, project-specific design and assessment by an appropriately qualified professional.

Redland SHIRE COUNCIL

PUBLIC UTILITIES IN ROAD RESERVES
TYPICAL SERVICE CONDUIT SECTIONS

ROAD/STREET
Standard Drawing
R-RSC-10

A B C D E

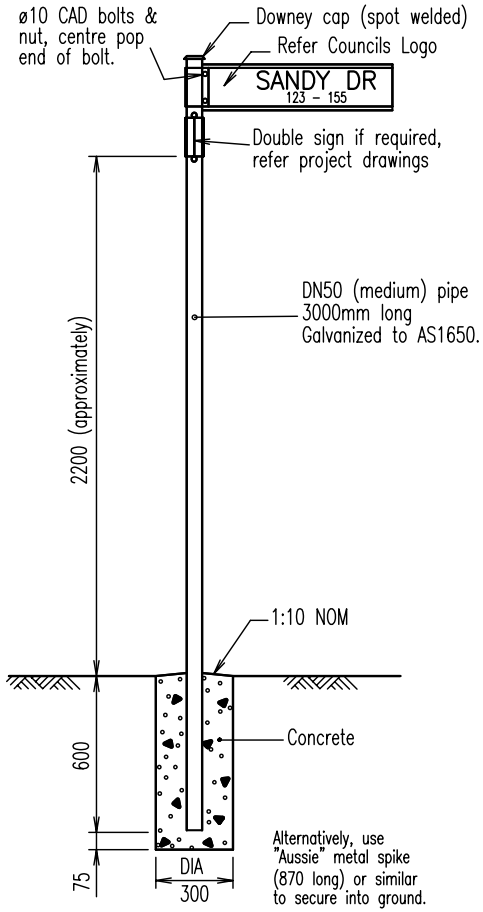

Table of Abbreviations	
Avenue	AV
Court	CT
Crescent	CR
Drive	DR
Esplanade	ESP
Lane	LA
Parade	PDE
Road	RD
Street	ST
Terrace	TCE

Other abbreviations to be approved by Superintendent.

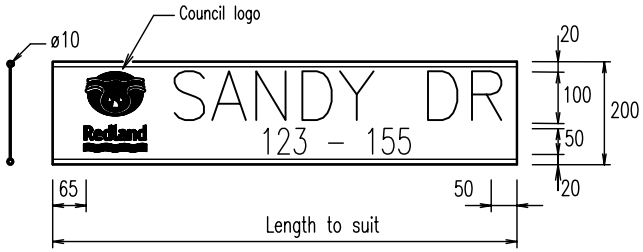

LEGEND

- ● Sign post is to be located 750mm behind nominal kerb line.
- ⊖ Sign post is to be located 2000mm MIN. – 4000mm MAX. from edge of seal, or as directed by the Superintendent.

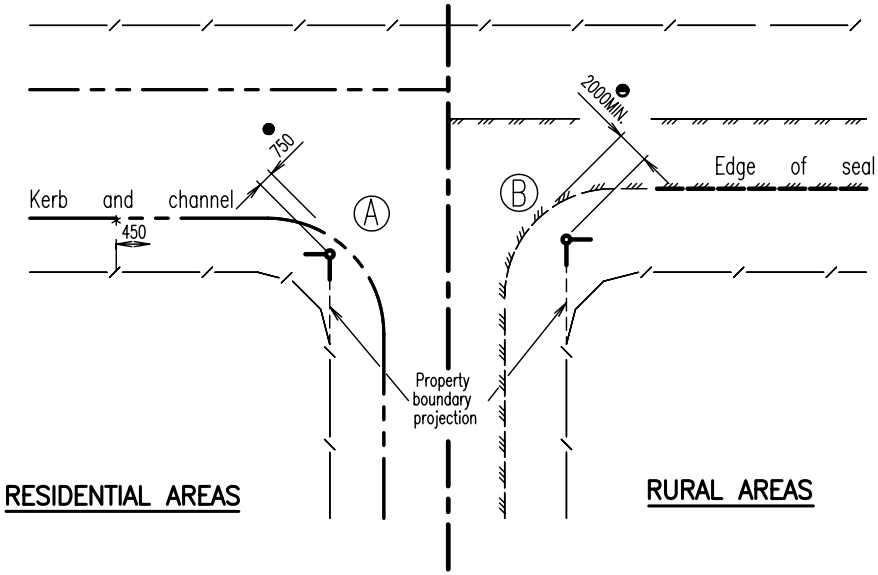

SIGN LOCATIONS

NOTES:

1. Street names must be approved by Council.
2. Name plates: 200mm wide and 3mm thick extruded aluminium or polypropylene section.
3. Bracket: Standard 200mm wide and 3mm thick alumimium extruded bracket (including 2 x ø6 CAD bolts & nuts). CAD bolts and nuts to AS 1897.
4. Letters & Numbers : Class 1 black on Class 1 white reflectorised background (both sides) to AS 1742.5
   Letters: 100mm high, Series B, medium spacing. (spacing may be varied to suit length of street name when approved by Superintendent.)
   Numbers: 50mm high, Series C, narrow spacing.
   All text to AS1744.
5. All signs are to be approved by the Superintendent prior to erection.
6. Signs to be positioned on the side of street/road that provides best visibility.
7. Concrete N20 in accordance with AS 1379 and AS 3600.
8. All dimensions in millimetres.

B	AMENDED	1/99	
A	ORIGINAL ISSUE	1/98	
	REVISIONS	DATE	APPROVED

© REDLAND SHIRE COUNCIL

DISCLAIMER. The authors shall have no liability or responsibility to the user or any other person or entity with respect to any liability, loss or damage caused or alleged to be caused, directly or indirectly, by the adoption and use of these Standard Drawings including, but not limited to, any interruption of service, loss of business or anticipatory profits, or consequential damages resulting from the use of these Standard Drawings. Persons must not rely on these Standard Drawings as the equivalent of, or a substitute for, project-specific design and assessment by an appropriately qualified professional.

Redland SHIRE COUNCIL

STREET NAME SIGN

ROAD/STREET
Standard Drawing
R-RSC-11

A B

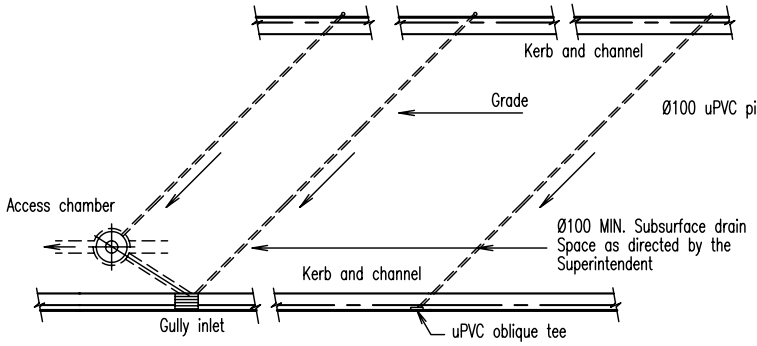

TYPICAL MITRE DRAIN LOCATIONS

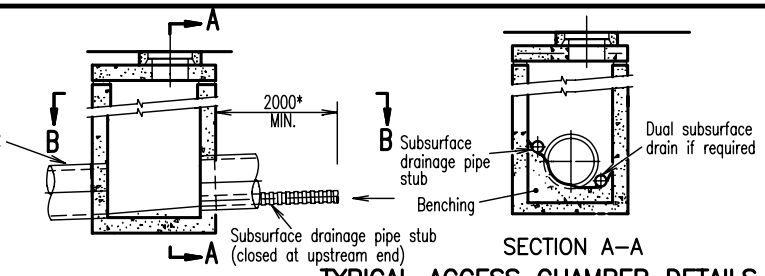

SECTIONAL ELEVATION

SECTION A–A

SECTION C–C

TYPICAL ACCESS CHAMBER DETAILS

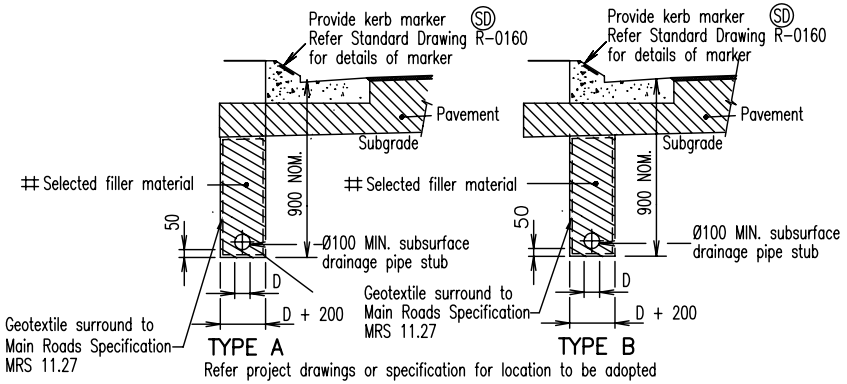

Refer project drawings or specification for location to be adopted

SUBSURFACE PAVEMENT DRAIN

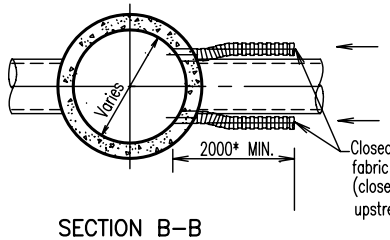

SECTION B–B

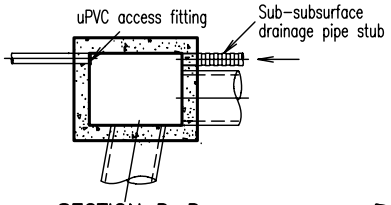

SECTION D–D

LEGEND

⊗ Refer note 7

* Typically 2m min length stub but to extend into mitre drains and clear of drainage structures.

Selected filler material to be 10 to 20mm uniform size crushed screenings.

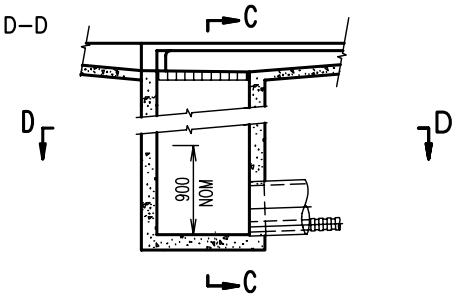

SECTIONAL ELEVATION

TYPICAL GULLY DETAILS

FILTER ON SLOTTED PIPE

A.S. SIEVE SIZE	% BY WT. PASS 'G
9.50 mm	100
4.75 mm	90 – 100
1.18 mm	45 – 80
300 µm	10 – 30
150 µm	0 – 10
75 µm	0 – 1

FILTER MATERIAL GRADING

Unless otherwise specified

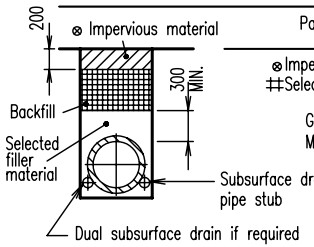

STORMWATER DRAINAGE TRENCHES WITH SUBSURFACE DRAINAGE

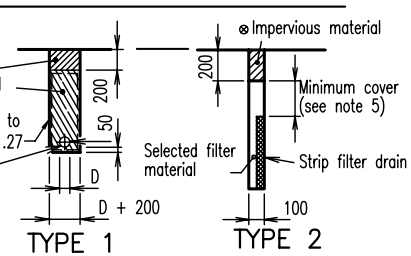

STANDARD SUBSURFACE DRAIN

NOTES:

1. All Subsurface drains, polyethylene corrugated slotted pipe to AS 2439.1, discharge at inlet pipe invert level unless detailed otherwise. 0.5% MIN grade.
2. Filter materials not complying with the specified grading requirements may be used when approved by the Superintendent. A geofabric may be used to line trenches where approved by the Superintendent.
3. Concrete anchors N20 in accordance with AS1379 and AS 3600.
4. At 'oblique tee' on subsurface drain cleaning points, the contractor may install Vinidex vertical fittings if approved by the Superintendent.
5. Minimum cover over subsurface drain pipe for various compactors unless approved otherwise:
   Hand held units – 100, Units < 15 tonnes – 200, Units > 15 tonnes – 300
6. 'D' = 100 NOM. unless otherwise specified.
7. Impervious material to be provided where subsurface drainage is not under a pavement. When impervious material is omitted the backfill / selected filter material shall extend to underside of pavement.
8. All Sub surface drainage pipes to be installed in approved filter fabric sock.
9. Location of Subsurface Pavement Drainange is to be in accordance with Type B unless otherwise approved.

B	AMENDED	02/05	
A	ORIGINAL ISSUE	1/02	
	REVISIONS	DATE	APPROVED

© REDLAND SHIRE COUNCIL

DISCLAIMER. The authors shall have no liability or responsibility to the user or any other person or entity with respect to any liability, loss or damage caused or alleged to be caused, directly or indirectly, by the adoption and use of these Standard Drawings including, but not limited to, any interruption of service, loss of business or anticipatory profits, or consequential damages resulting from the use of these Standard Drawings. Persons must not rely on these Standard Drawings as the equivalent of, or a substitute for, project-specific design and assessment by an appropriately qualified professional.

Redland SHIRE COUNCIL

SUBSURFACE DRAINAGE

ROAD/STREET Standard Drawing

R-RSC-12

A B

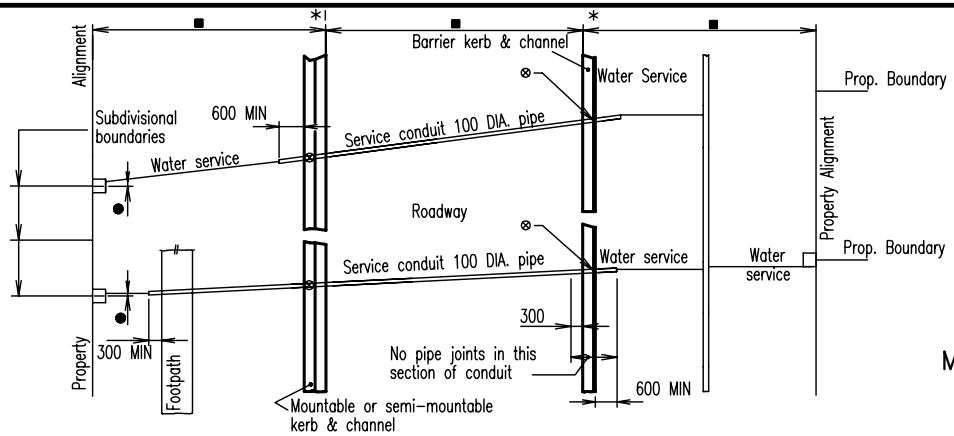

PLAN

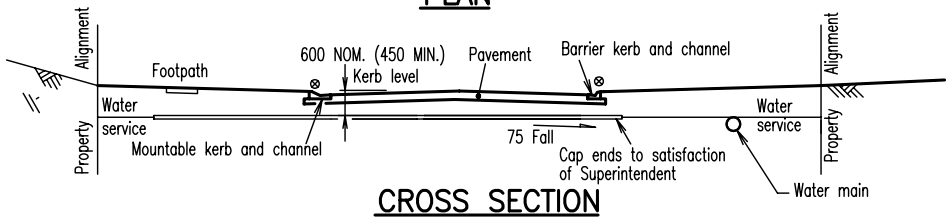

CROSS SECTION

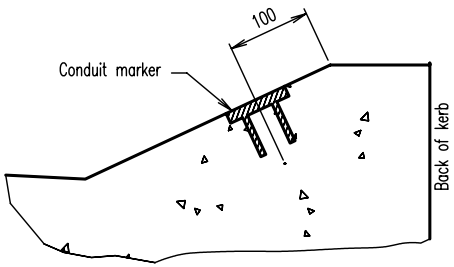

SECTION A–A
MOUNTABLE OR SEMI–MOUNTABLE KERB

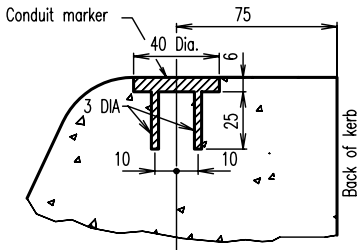

SECTION A–A
BARRIER KERB

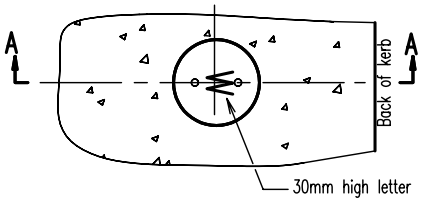

PLAN

BRASS OR STAINLESS STEEL SERVICE CONDUIT MARKER

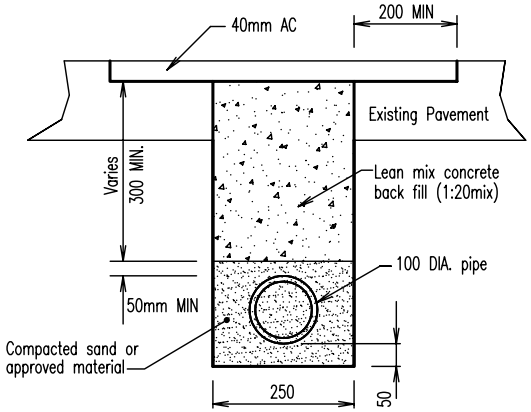

EXISTING ROAD CONSTRUCTION

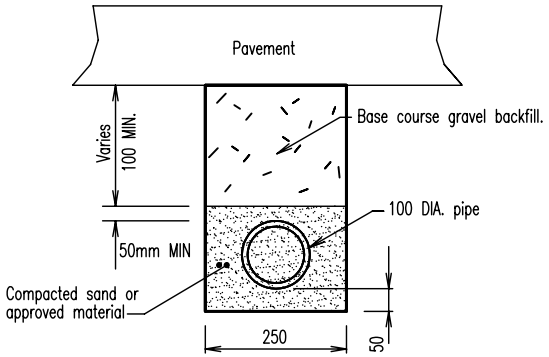

NEW ROAD CONSTRUCTION

TYPICAL SECTIONS – SERVICE CONDUITS

LEGEND

- ∗ Lip of Channel
- ⊗ Service conduit marker
- ■ Refer project drawings.
- ● Service conduit to be located in a straight line between opposite side property boundaries.
- —SC——— —— Service conduits (on project drawings).

NOTES:

1. Trimming and compaction of the subgrade to be completed and approved before excavation for service conduits is commenced. Excavated material shall be thrown on the footpath and not on the subgrade.
2. Service conduit pipe alternatives :– 100 DIA F.R.C. class 2. (2s)
   100 DIA uPVC, Class 6 or SH
3. Where concrete footpaths/cyclepaths exist or are planned, the service conduit is to extend past the far side of the path by 300mm.
4. Marker details may be varied if approved.
5. All dimensions in millimetres.

C	AMENDED	1/02	
B	AMENDED	1/99	
A	ORIGINAL ISSUE	1/98	
REVISIONS		DATE	APPROVED

© REDLAND SHIRE COUNCIL
DISCLAIMER. The authors shall have no liability or responsibility to the user or any other person or entity with respect to any liability, loss or damage caused or alleged to be caused, directly or indirectly, by the adoption and use of these Standard Drawings including, but not limited to, any interruption of service, loss of business or anticipatory profits, or consequential damages resulting from the use of these Standard Drawings. Persons must not rely on these Standard Drawings as the equivalent of, or a substitute for, project-specific design and assessment by an appropriately qualified professional.

Redland SHIRE COUNCIL

WATER SERVICE CONDUITS

ROAD/STREET
Standard Drawing
R-RSC-13
A B C

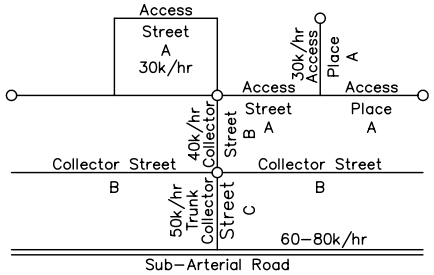

STREET CLASSIFICATIONS

NOTES

1. Median may be narrowed to 2.4 minimum away from intersections to ensure safe staging for pedestrians and cyclists.
2. All lanes adjacent to kerb and channel except or type A and B streets, are multipurpose Bicycle lanes, Breakdown lanes and may be used for Bus stops which can be indented where insufficeint width is available.

* The reserve width and carriageway configuration are variable and subject to road classification and planning layout requirements, including bikeway alignments and bus setdown areas.

\+ Bus Route

% Barrier Kerb & Channel

\# Residential Path and or bikeway on both verges

ø Excludes schools, commercial sites etc (Min frontage 50m)

Shared use path on verge

⊕ Bicycle lane on road pavement

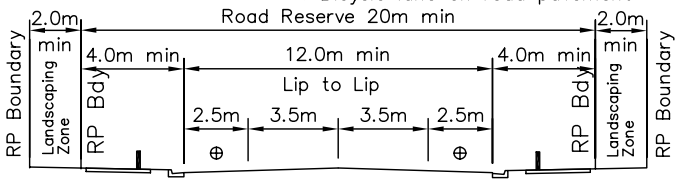

Max. 15 000 VPD

#%+* 2 LANE SUB–ARTERIAL ROAD – UNDIVIDED

ø (NO RESIDENTIAL FRONTAGE ACCESS)

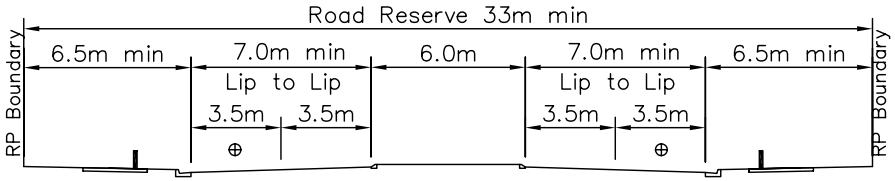

Max. 15 000 VPD

#%+* 2 LANE SUB–ARTERIAL ROAD – DIVIDED

(WITH FRONTAGE ACCESS)

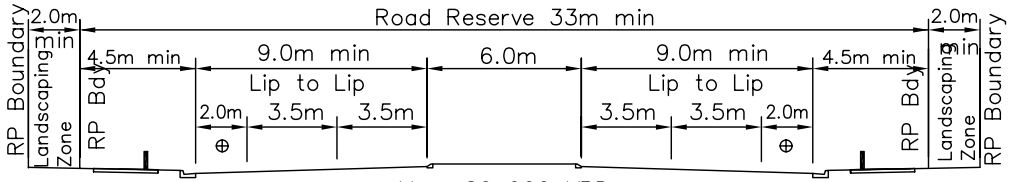

Max. 20 000 VPD

#%+* 4 LANE SUB–ARTERIAL ROAD – DIVIDED

ø (NO RESIDENTIAL FRONTAGE ACCESS)

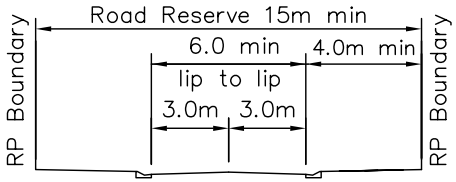

Max. 1000 VPD

RESIDENTIAL ACCESS PLACE & ACCESS STREET – TYPE A

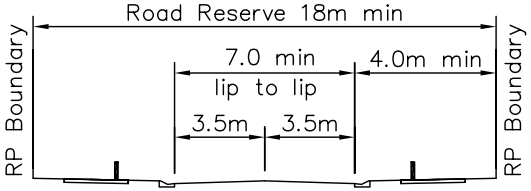

Max. 3000 VPD

RESIDENTIAL COLLECTOR STREET – TYPE B

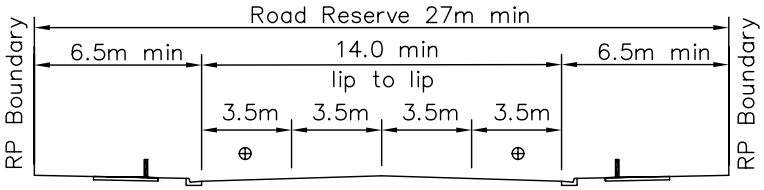

Max. 10 000 VPD

#%+* TRUNK COLLECTOR STREET – TYPE C

(WITH FRONTAGE ACCESS)

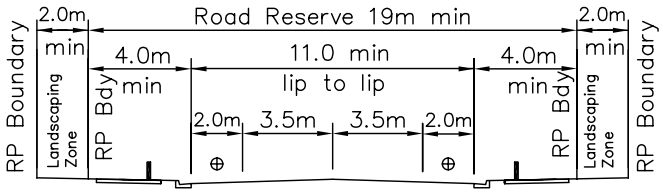

Max. 10 000 VPD

#%+* TRUNK COLLECTOR STREET – TYPE C

ø (NO RESIDENTIAL FRONTAGE ACCESS)

B	AMENDED	2/05	
A	ORIGINAL ISSUE	1/02	
REVISIONS		DATE	APPROVED

© REDLAND SHIRE COUNCIL

DISCLAIMER. The authors shall have no liability or responsibility to the user or any other person or entity with respect to any liability, loss or damage caused or alleged to be caused, directly or indirectly, by the adoption and use of these Standard Drawings including, but not limited to, any interruption of service, loss of business or anticipatory profits, or consequential damages resulting from the use of these Standard Drawings. Persons must not rely on these Standard Drawings as the equivalent of, or a substitute for, project–specific design and assessment by an appropriately qualified professional.

Redland SHIRE COUNCIL

ROAD TYPES AND MINIMUM ROAD WIDTHS

ROAD/STREET

Standard Drawing

R–RSC–15

A B

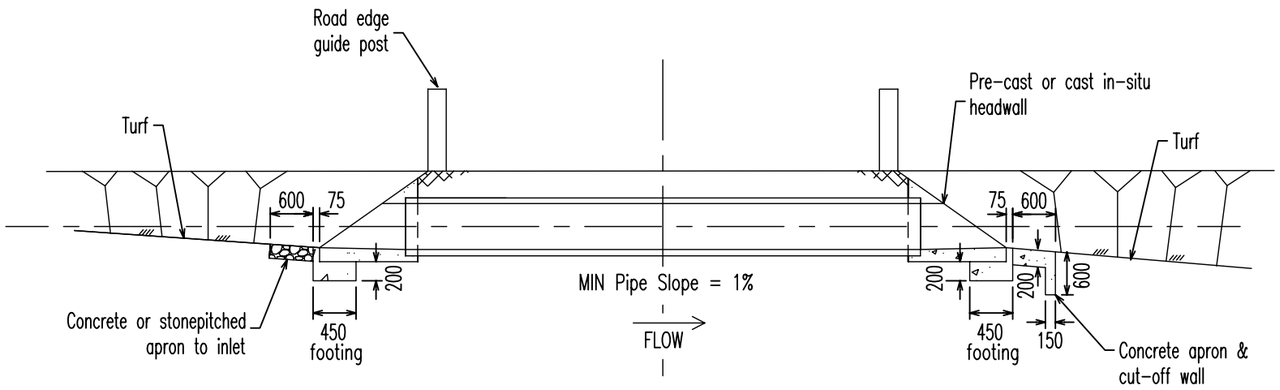

SECTION A–A

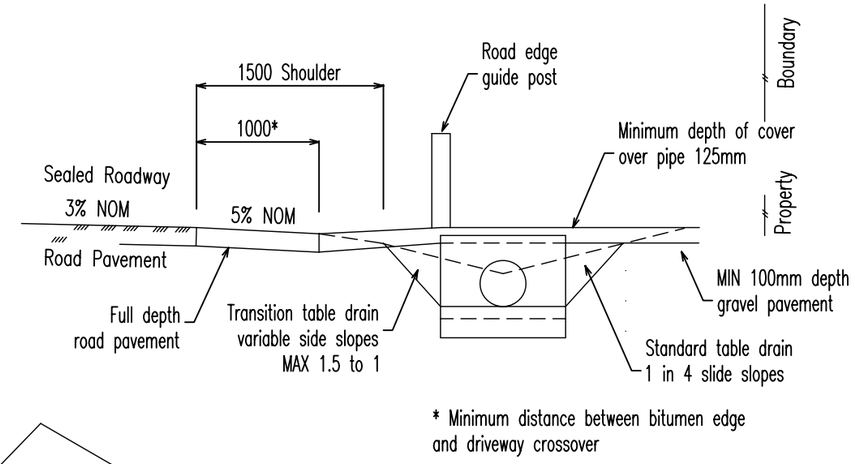

SECTION B–B

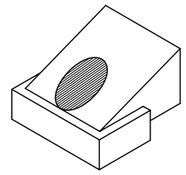

ISOMETRIC VIEW
TYPICAL HEADWALL

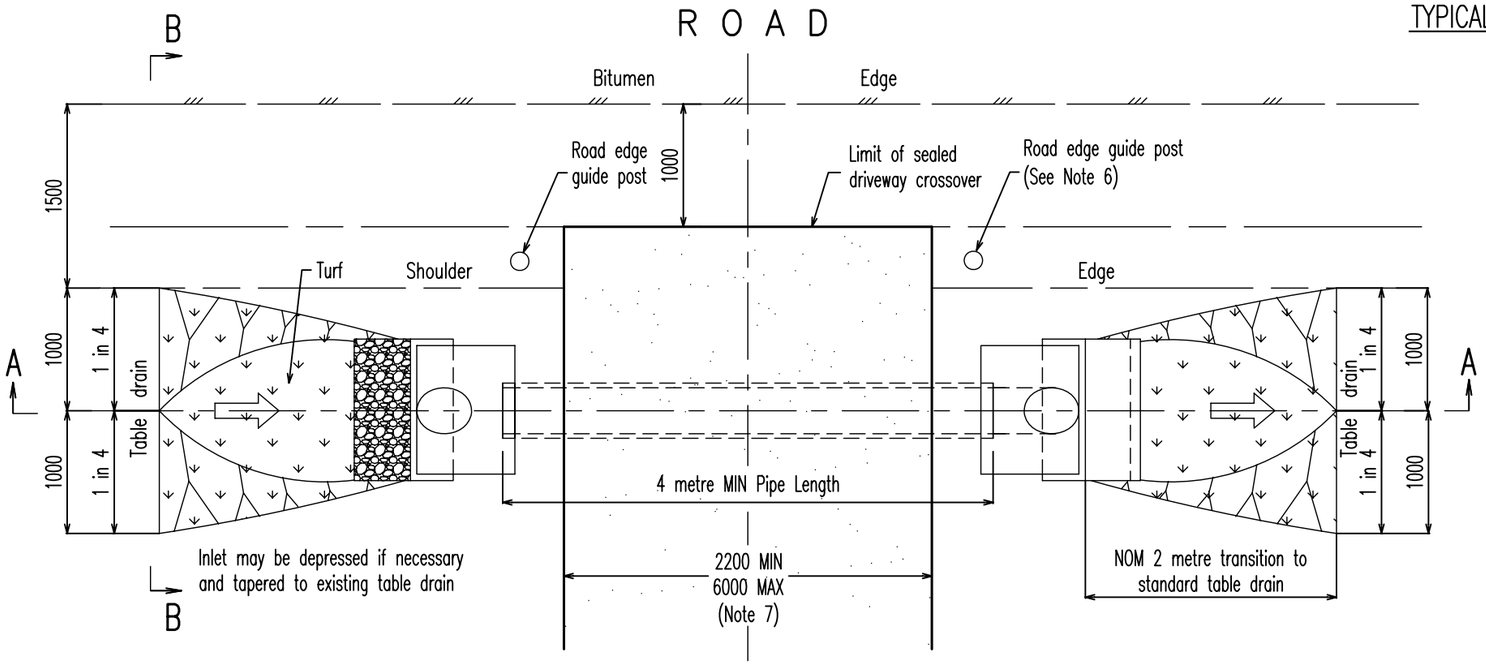

PLAN

NOTES:

1. The length of pipe may be increased provided approval is granted
2. Minimum pipe diameter - 300mm
   Maximum pipe diameter - 450mm
   Minimum pipe length - 4 metres
   Minimum pipe slope - 1%
3. Twin pipes may be used where approved.
4. Disturbed earthworks at inlet and outlet are to be protected by turfing.
5. The location of Rural Driveway Crossovers are to conform to AS2890.1 i.e. the absolute minimum vertical and horizontal stopping sight distance being :-

Frontage Road Speed (km/h)	Min Sight Distance
50	40m
60	55m
70	70m
80	95m

Driveway crossovers are to be located a mininmum of 30m from a road intersection.

6. Guide posts are to be located 1.2m from the bitumen edge of roadway
7. Design Standard for Self-assessable development. Widths in excess of 6000mm (6 metres), will require a code assessable Development Application (see Part 7 Division 4 - Domestic Driveway Crossover Code).

B	AMENDMENT	12/07	
A	ORIGINAL ISSUE	7/05	
REVISIONS		DATE	APPROVED

© REDLAND SHIRE COUNCIL
DISCLAIMER. The authors shall have no liability or responsibility to the user or any other person or entity with respect to any liability, loss or damage caused or alleged to be caused, directly or indirectly, by the adoption and use of these Standard Drawings including, but not limited to, any interruption of service, loss of business or anticipatory profits, or consequential damages resulting from the use of these Standard Drawings. Persons must not rely on these Standard Drawings as the equivalent of, or a substitute for, project-specific design and assessment by an appropriately qualified professional.

Redland SHIRE COUNCIL

DOMESTIC DRIVEWAY CROSSOVER FOR PIPE CROSSINGS

ROAD/STREET
Standard Drawing
R-RSC-16

A | B

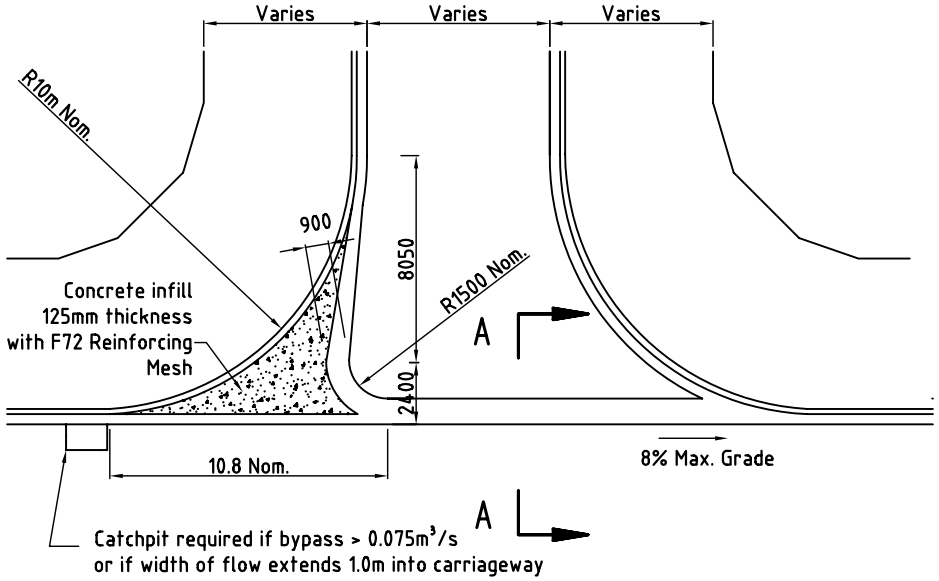

PLAN
Scale 1:200

INVERT DETAIL FOR BARRIER KERB & CHANNEL

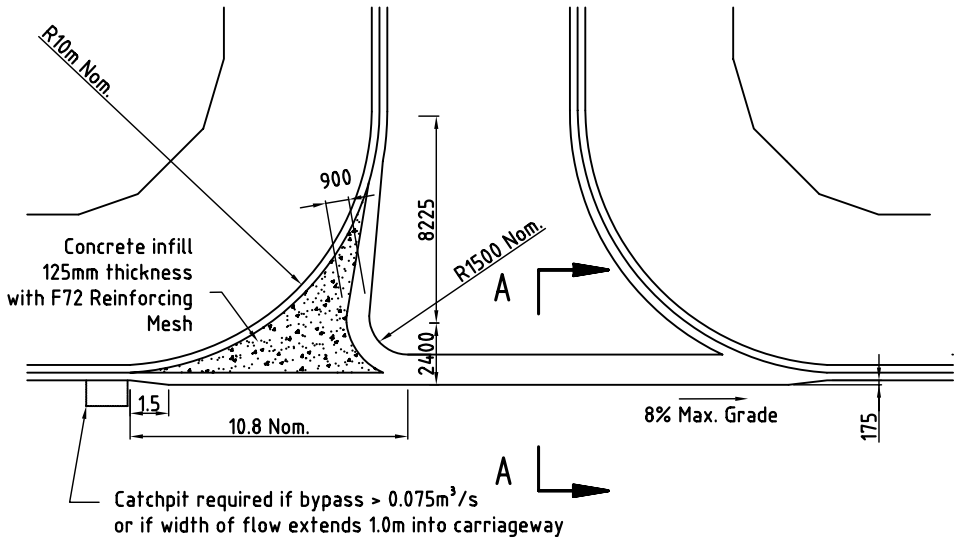

PLAN
Scale 1:200

INVERT DETAIL FOR MOUNTABLE TYPE KERB & CHANNEL

LEGEND

- * Lip line for setting out.
- ▪ Channel, invert width - refer project drawings.
- ● 10mm Radius.
- ▫ 20mm Radius.
- ◓ 175 where specified for commercial and industrial applications, refer project drawings.

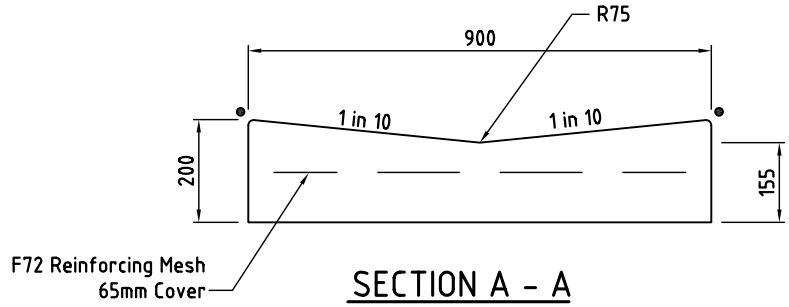

SECTION A - A
Scale 1:100

NOTES

1. All materials and construction shall comply with AS 2876 except for dimensionson this drawing.
2. All concrete S32 MIN (refer project documentation) in accordance with AS 1379 and AS 3600
3. Reinforcement bars to AS 1302, trench fabric to AS 1304.
4. JOINTS: Contraction Joints to be cut through full depth of Kerb & Channel at 3m centres.
   : Expantion joints required at 30m centres and at tangent points of Kerb return. Provide 10mm thick full depth closed cell cross linked polyethylene foam (85-150kg/m³)
5. All dimensions in millimetres.

A	ORIGINAL ISSUE	05/05	
	REVISIONS	DATE	APPROVED

© REDLAND SHIRE COUNCIL

DISCLAIMER. The authors shall have no liability or responsibility to the user or any other person or entity with respect to any liability, loss or damage caused or alleged to be caused, directly or indirectly, by the adoption and use of these Standard Drawings including, but not limited to, any interruption of service, loss of business or anticipatory profits, or consequential damages resulting from the use of these Standard Drawings. Persons must not rely on these Standard Drawings as the equivalent of, or a substitute for, project-specific design and assessment by an appropriately qualified professional.

Redland SHIRE COUNCIL

INTERSECTION
CONCRETE INVERT
DETAILS

ROAD/STREET
Standard
Drawing
R-RSC-21

A

Std. Dwg. No.	Descriptions
	Redland Shire Council Approved Standard Drawings
	IPWEAQ Drawings
D-0010	Access Chamber Details Dia. 1050–2100
D-0011	Access Chamber Roof Slabs Dia. 1050–2100
D-0012	Access Chamber Roof Slabs Dia. 1500 Extended 600 & 900
D-0013	Access Chamber Roof Slab Rectangular Standard Reinforcement
D-0014	Access Chamber Cast Iron Cover and Frame; C.I. Concrete Filled Cover
D-0015	Access Chamber Cast Iron Cover and Frame Bolt Down
D-0016	Access Chamber Step Irons
D-0017	Access Chamber Roof Slab – Rectangular Fabric Reinforced
D-0031	Excavation, Bedding and Backfilling of Precast Box Culverts
D-0050	Field Inlet and Overflow Gully Type 1 and Type 2
D-0064	Drainway Stormwater Inlet Components
D-0065	Precast Concrete Side Inlet Gully Components
D-0066	Precast Stormwater Inlet, Test Load Procedure
D-0067	Precast Stormwater Inlet, Construction Setting Out, Barrier/Mountable Kerb and Channel
D-0080	Inlets and Outlets to Stormwater Drains (Concrete)
D-0081	Inlets and Outlets to Stormwater Drains (Stonepitched)
D-0040	Sediment Control Devices, Sediment Fence, Entry/Exit Sediment Trap.
D-0041	Sediment Control Devices, Kerb and Field Inlets, Check Dams and Straw Bale Bank
	Redland Shire Council Drawings
D-RSC-2	Gully – Roadway Type – Precast Lintel Details
D-RSC-3	Gully – Roadway Type – Channel Lip in Line
D-RSC-4	Gully – Roadway Type – Precast Units; Anti – Ponding
D-RSC-6	Precast Gully and Access Chamber combination.
D-RSC-7	Sample As Constructed Plan – Stormwater & Roofwater Drainage
D-RSC-8	Stormwater Flow Dissipator – Typical Layout Details
D-RSC-9	Stormwater Flow Dissipator Unit Structure Details
D-RSC-10	Stormwater Flow Dissipator Gate, Trash Rack & Access Unit Details
D-RSC-11	Excavation, Bedding and Backfill
D-RSC-12	Lip in Line Catchpits – Hydraulic Capture Charts – Type M1 Kerb & Channel on Grade – 2400mm Lintel
D-RSC-13	Lip in Line Catchpits – Hydraulic Capture Charts – Type M1 Kerb & Channel on Grade – 3600mm Lintel
D-RSC-14	Lip in Line Catchpits – Hydraulic Capture Charts – Type B1 Kerb & Channel on Grade – 2400mm Lintel
D-RSC-15	Lip in Line Catchpits – Hydraulic Capture Charts – Type B1 Kerb & Channel on Grade – 3600mm Lintel
D-RSC-16	Lip in Line Catchpits – Hydraulic Capture Charts – Type M1 Kerb & Channel Sag Conditions – All Lintels
D-RSC-17	Lip in Line Catchpits – Hydraulic Capture Charts – Type B1 Kerb & Channel Sag Conditions – All Lintels
D-RSC-18	Field Inlet Pit Dome Type Cover (Non Pedestrian Areas)

C	AMENDED	2/05	
B	AMENDED	1/02	
A	ORIGINAL ISSUE	1/98	
REVISIONS		DATE	APPROVED

© REDLAND SHIRE COUNCIL

DISCLAIMER. The authors shall have no liability or responsibility to the user or any other person or entity with respect to any liability, loss or damage caused or alleged to be caused, directly or indirectly, by the adoption and use of these Standard Drawings including, but not limited to, any interruption of service, loss of business or anticipatory profits, or consequential damages resulting from the use of these Standard Drawings. Persons must not rely on these Standard Drawings as the equivalent of, or a substitute for, project-specific design and assessment by an appropriately qualified professional.

Redland SHIRE COUNCIL

INDEX

STANDARD DRAWINGS

DRAINAGE

DRAINAGE

Standard Drawing

D-RSC-1

A B C

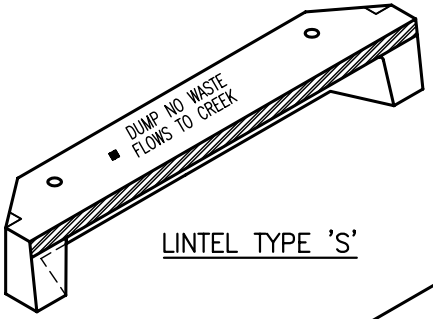

LINTEL TYPE 'S'

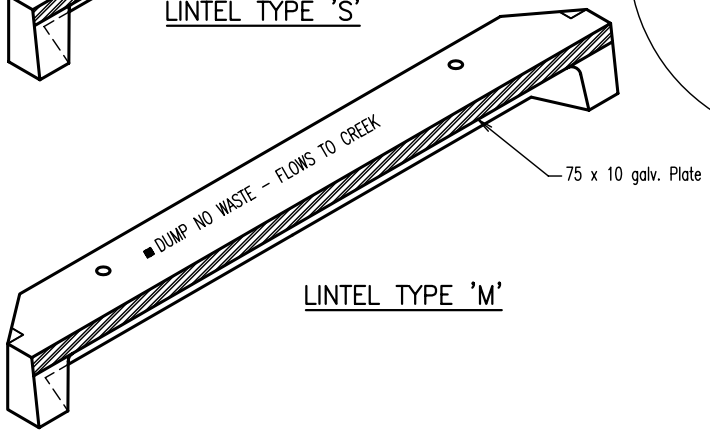

LINTEL TYPE 'M'

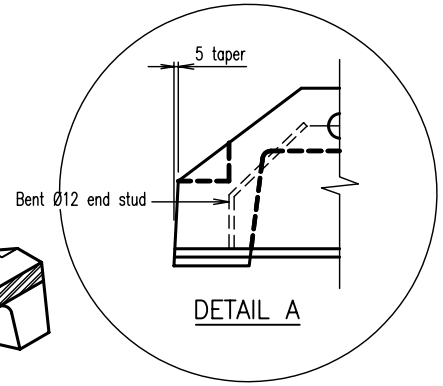

DETAIL A

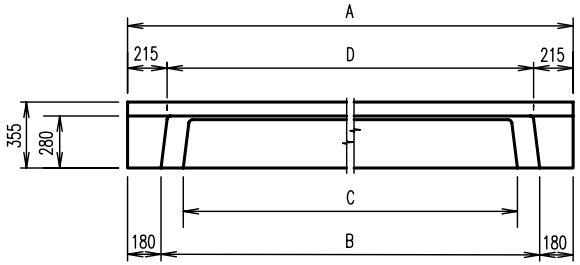

ELEVATION

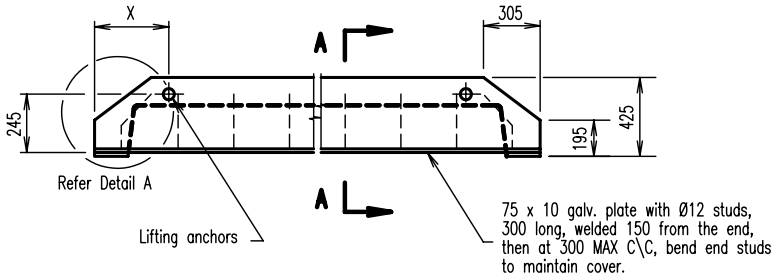

PLAN

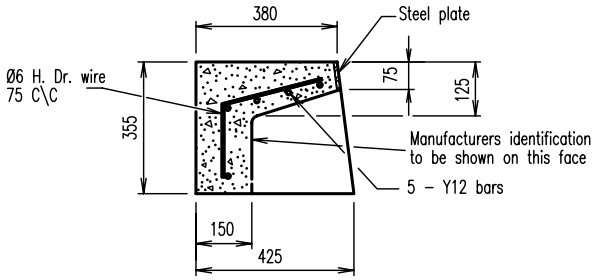

SECTION A–A

NOTES

1. The minimum design load rating shall be class C.
2. Concrete to be minimum grade N40 in accordance with AS 1379 and AS 3600.
3. Each lifting anchor to be "swiftlift" or equivalent 1.3 tonne, galvanized to AS 1214 and fitted to manufacturers specification.
4. Reinforcing steel Grade 400 to AS 1302. Place centrally, 40 MIN end cover.
5. All steel flats Grade 250 to AS 3678.
6. All welds to AS 1554.
7. H. Dr. wire to AS 1310.
8. Steel plate hot dip galvanized to AS 4680.
9. All dimensions in millimeters.

LEGEND

■ Text 40mm high letters imprinted 5mm into concrete.

LINTEL	A	B	C	D	X	MASS (kg)
S	2400	2040	1800	1970	400	445
M	3600	3240	3000	3170	690	550

B	AMENDED	1/02	
A	COUNCIL ISSUE	1/98	
	REVISIONS	DATE	APPROVED

© REDLAND SHIRE COUNCIL
DISCLAIMER. The authors shall have no liability or responsibility to the user or any other person or entity with respect to any liability, loss or damage caused or alleged to be caused, directly or indirectly, by the adoption and use of these Standard Drawings including, but not limited to, any interruption of service, loss of business or anticipatory profits, or consequential damages resulting from the use of these Standard Drawings. Persons must not rely on these Standard Drawings as the equivalent of, or a substitute for, project-specific design and assessment by an appropriately qualified professional.

Redland SHIRE COUNCIL

GULLY – ROADWAY TYPE PRECAST LINTEL DETAILS

DRAINAGE
Standard Drawing
D–RSC–2

A B

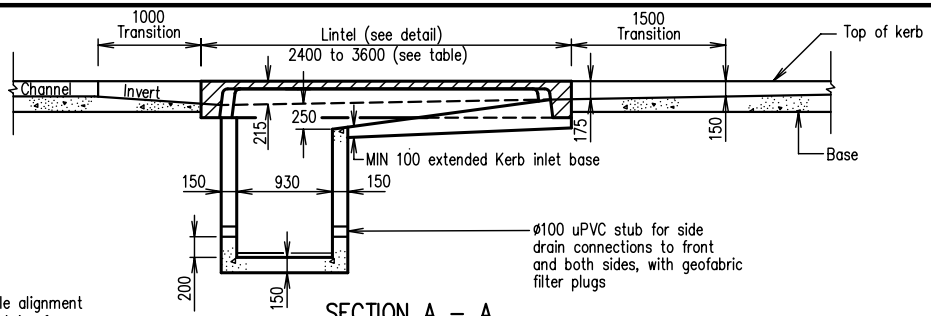

SECTION A – A

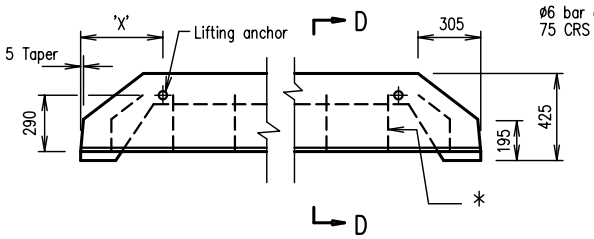

PLAN

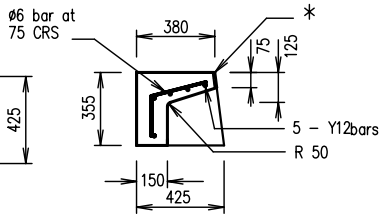

SECTION D – D

* 75 x 10 GALV. PL. with ø10 studs 300 long, weld on 150 from the end, then at 300 centres. Bend end studs to maintain cover.

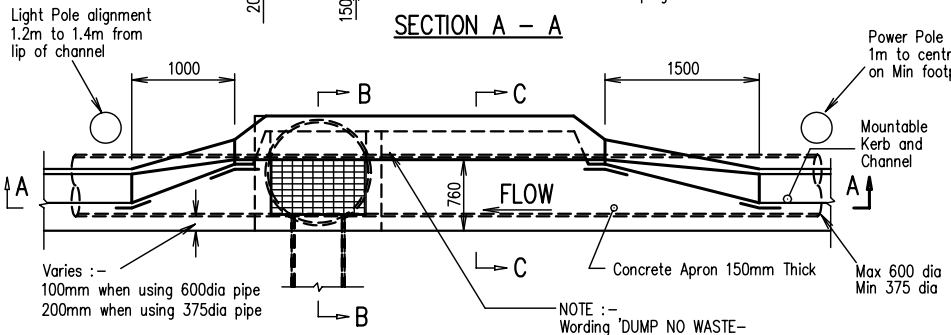

TYPICAL INLET ON GRADE

Type R (Flow from Right hand side)

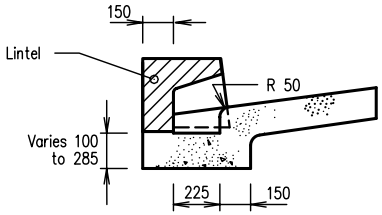

SECTION C – C

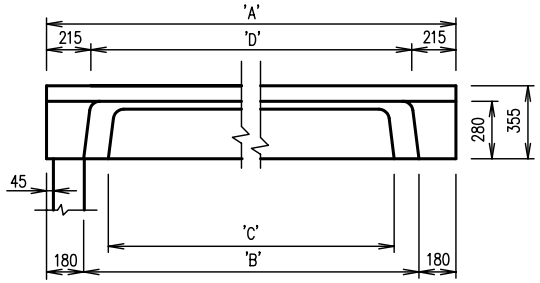

ELEVATION

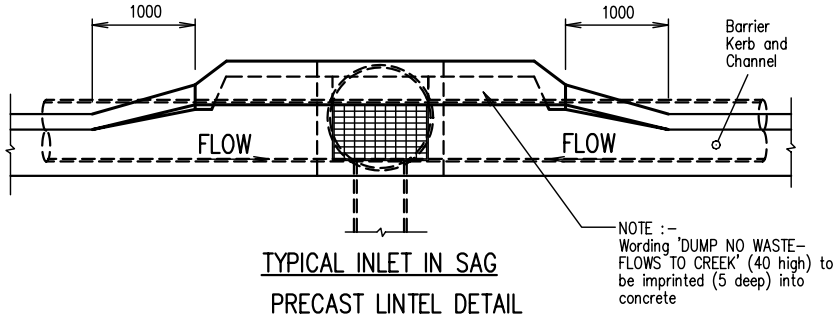

TYPICAL INLET IN SAG

PRECAST LINTEL DETAIL

TYPE	'A'mm	'B'mm	'C'mm	'D'mm	'X'mm	MASS(kg)
S (Small)	2400	2040	1800	1970	400	445
M (Medium)	3600	3240	3000	3170	690	550

When ordering specify as follows :– Type (length) and direction of flow.
e.g. Type SR (meaning 2400 long with flow from Right hand side)
Type MS (meaning 3600 long in Sag with flow from both directions)

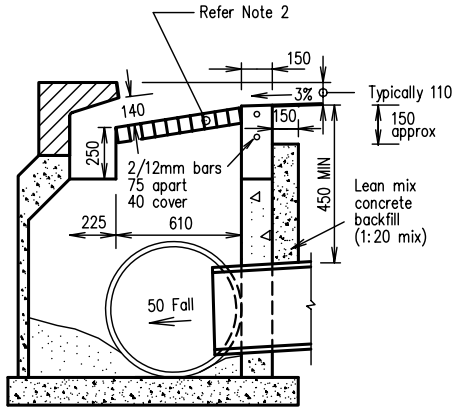

SECTION B – B

NOTES

1. The catchpit may be cast–in–situ or precast. This drawing indicates a cast–in–situ catchpit with a precast lintel.
2. 900 x 600 clear opening gully grate frame to be cast into concrete. Gully grate and frame to be Class D to AS3996 and have Australian Standardsmark certification cleary shown.
3. Precast concrete to be minimum Grade N40 and conform to AS 3600 and 1379.
4. Each lifting anchor to be "Swiftlift" or equivalent 1.3 tonne Galvanized (Conforming to AS 1214) and fitted to manufacturers specification.
5. Reinforcing placed centrally, 40 MIN end cover.
6. Reinforcement steel grade 400 to conform to AS 4671.
7. Casting to conform to AS 1830 and AS 1831.
8. Catchpits on Queensland Transport Infrastructure shall be subject to Queensland Transport approval.
9. RSC approved gully pit capacity charts with 10% blockage factor applies for on grade pits.
10. All dimensions in mm.

C	AMENDED	1/02	
B	AMENDED	1/99	
A	ORIGINAL ISSUE	1/98	
REVISIONS		DATE	APPROVED

© REDLAND SHIRE COUNCIL

DISCLAIMER. The authors shall have no liability or responsibility to the user or any other person or entity with respect to any liability, loss or damage caused or alleged to be caused, directly or indirectly, by the adoption and use of these Standard Drawings including, but not limited to, any interruption of service, loss of business or anticipatory profits, or consequential damages resulting from the use of these Standard Drawings. Persons must not rely on these Standard Drawings as the equivalent of, or a substitute for, project–specific design and assessment by an appropriately qualified professional.

Redland SHIRE COUNCIL

GULLY–ROADWAY TYPE CHANNEL LIP IN LINE

DRAINAGE

Standard Drawing

D–RSC–3

A B C

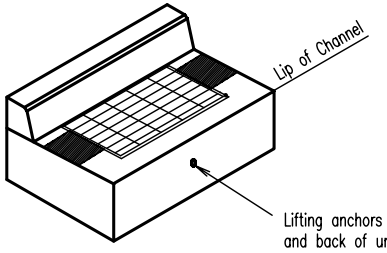

ISOMETRIC VIEW

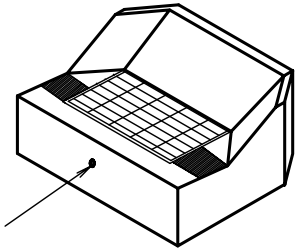

ISOMETRIC VIEW

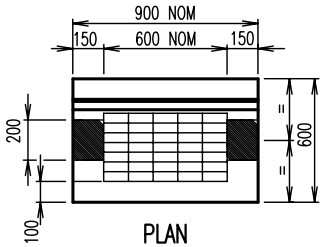

PLAN

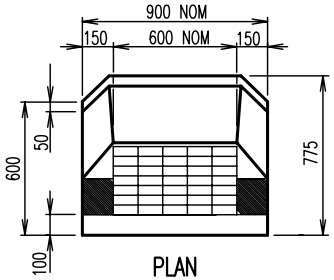

PLAN

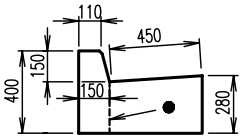

END ELEVATION

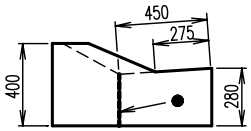

END ELEVATION

BARRIER KERB

MOUNTABLE KERB

ANTI-PONDING GULLIES

(No Lintel)

Refer note 12

COMPONENT	PRECAST GULLY
Proof Load	50 kN
Ultimate Load	75 kN

TABLE A
LOADING CRITERIA

LEGEND

■ Load test area (200 x 150), refer note 3.

● Manufacturers' identification to be shown on this face.

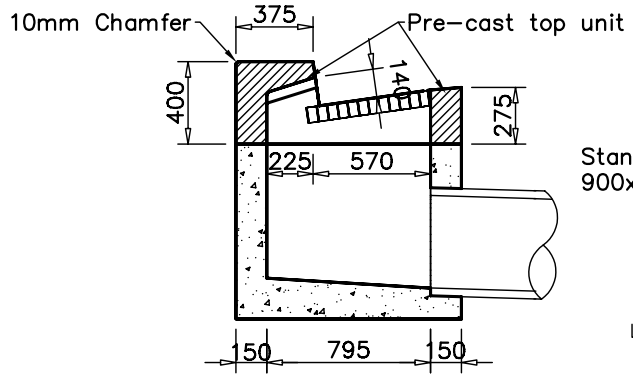

SECTION A–A

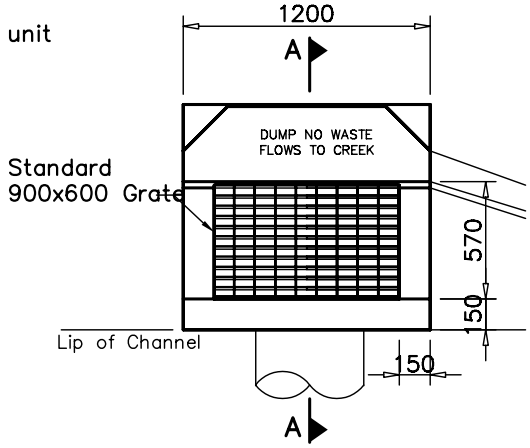

PLAN

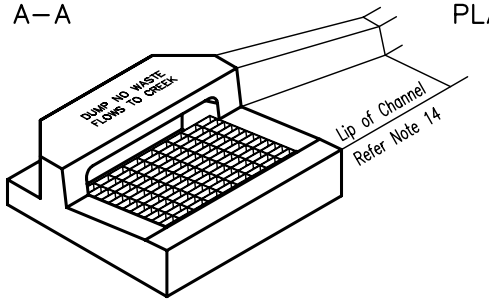

ISOMETRIC VIEW

ANTI–PONDING GULLY

(With Back Inlet)

NOTES

1. Concrete in accordance with AS 1379 & AS 3600, Castings to AS 1830.
2. Each lifting anchor to be "swiftlift" or equivalent 1.3 tonne, galvanised to AS 1214 and fitted to manufacturers' specification.
3. Reinforcement to AS 1302 shall be provided by the designer to obtain the strength required to pass the appropriate test criteria.
The load detailed in Table A shall be applied to each location, separate tests at each location.
4. All steel flats Grade 250 to AS 3678.
5. All welds to AS 1554.
6. H. Dr. wire to AS 1303.
7. Steel plate hot dip galvanised to AS 4680.
8. Grate and frame Class D to AS 3996.
9. Grate frame to be cast into concrete.
10. Precast concrete units must be approved by the Superintendent prior to use.
11. Provide 10mm mortar (1 cement : 3 fine sand) joint between gully pit and precast units.
12. Maximum depth to invert shall be 1000 if gully does not have a back inlet.
13. Precast units to be placed on cast in–situ Chamber. Chamber wall wall thickness to match unit.
14. Kerb and Channel to be transitioned over 750mm to match inlet of gully.
15. All dimensions in millimetres.

B	AMENDED	1/02	
A	ORIGINAL ISSUE	1/98	
REVISIONS		DATE	APPROVED

© REDLAND SHIRE COUNCIL
DISCLAIMER. The authors shall have no liability or responsibility to the user or any other person or entity with respect to any liability, loss or damage caused or alleged to be caused, directly or indirectly, by the adoption and use of these Standard Drawings including, but not limited to, any interruption of service, loss of business or anticipatory profits, or consequential damages resulting from the use of these Standard Drawings. Persons must not rely on these Standard Drawings as the equivalent of, or a substitute for, project–specific design and assessment by an appropriately qualified professional.

Redland SHIRE COUNCIL

GULLY – ROADWAY TYPE
PRECAST UNITS
ANTI–PONDING

DRAINAGE
Standard Drawing
D–RSC–4

A B

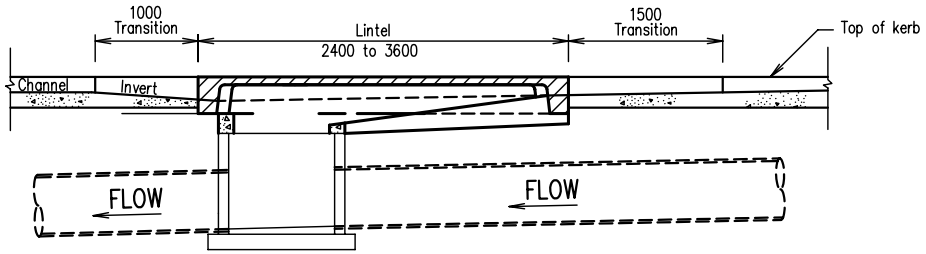

SECTION A – A

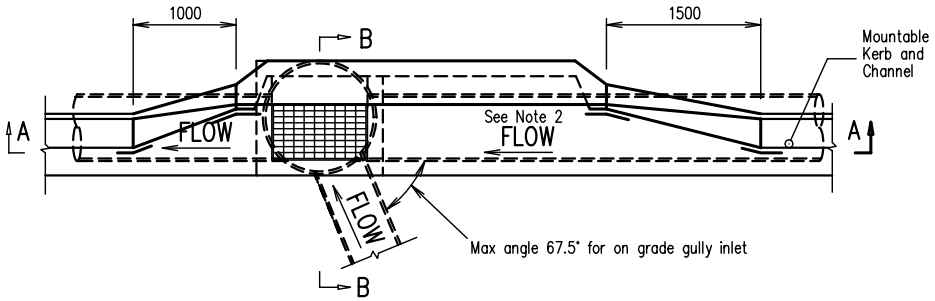

TYPICAL INLET ON GRADE

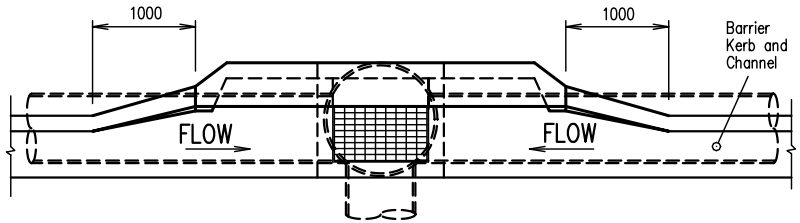

TYPICAL INLET IN SAG

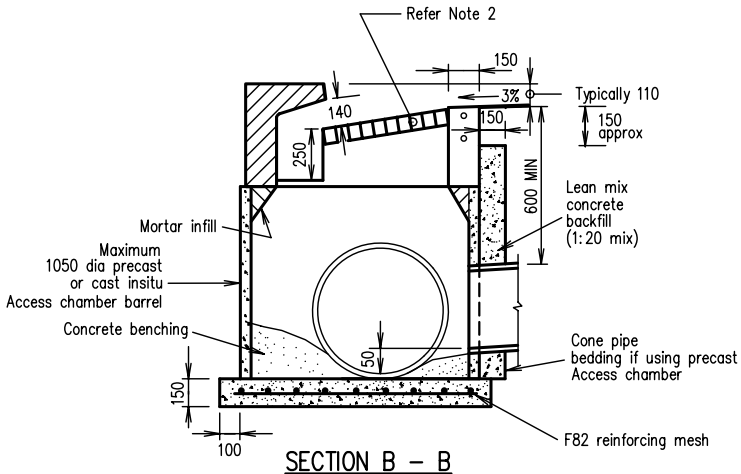

SECTION B – B

NOTES

1. The catchpit and or the access chamber barrel may be cast–in–situ or precast.
2. The maximum size pipe connected to the chamber is 600 mm diameter
3. 900 x 600 clear opening gully grate frame to be cast into concrete. Gully grate and frame to be Class D to AS3996 and have Australian Standards mark certification cleary shown. (Refer standard drawing R–RSC–3)
4. Precast concrete to be minimum Grade N40 and conform to AS 3600 and AS 1379.
5. Each lifting anchor to be "Swiftlift" or equivalent 1.3 tonne Galvanized (Conforming to AS 1214) and fitted to manufacturers specification.
6. Reinforcing placed centrally, 40 MIN end cover.
7. Reinforcement steel grade 400 to conform to AS 4671.
8. Casting to conform to AS 1830 and AS 1831.
9. Catchpits on Queensland Transport Infrastructure are subject to Queensland Transport approval.
10. RSC approved gully pit capacity charts with 10% blockage factor applies
11. All dimensions in mm.

A	ORIGINAL ISSUE	6/04	SM
	REVISIONS	DATE	APPROVED

© REDLAND SHIRE COUNCIL

DISCLAIMER. The authors shall have no liability or responsibility to the user or any other person or entity with respect to any liability, loss or damage caused or alleged to be caused, directly or indirectly, by the adoption and use of these Standard Drawings including, but not limited to, any interruption of service, loss of business or anticipatory profits, or consequential damages resulting from the use of these Standard Drawings. Persons must not rely on these Standard Drawings as the equivalent of, or a substitute for, project–specific design and assessment by an appropriately qualified professional.

Redland SHIRE COUNCIL

PRECAST GULLY INLET AND ACCESS CHAMBER COMBINATION

DRAINAGE

Standard Drawing

D–RSC–6

A

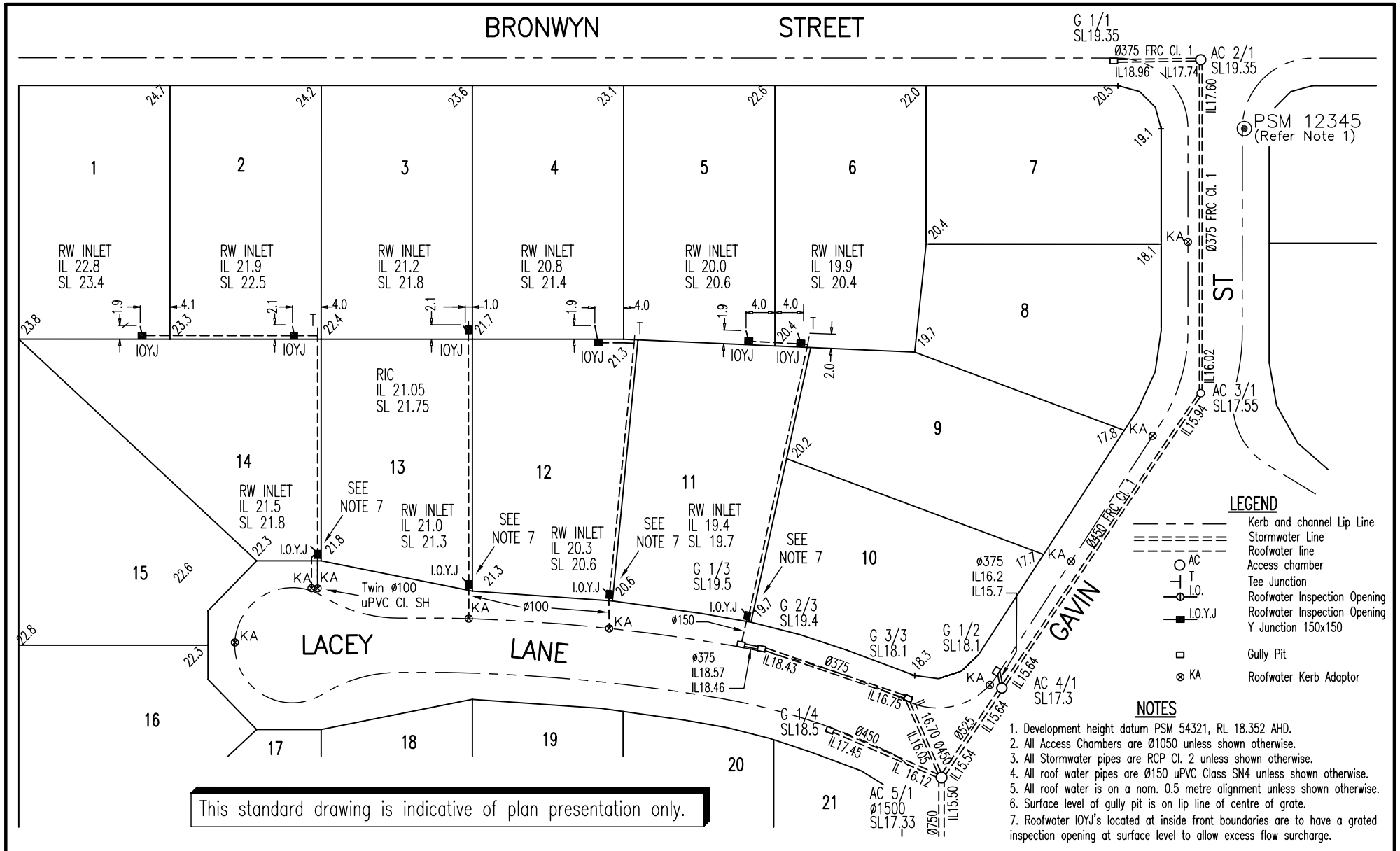

This standard drawing is indicative of plan presentation only.

LEGEND

- Kerb and channel Lip Line
- Stormwater Line
- Roofwater line
- AC — Access chamber
- T — Tee Junction
- I.O. — Roofwater Inspection Opening
- I.O.Y.J — Roofwater Inspection Opening Y Junction 150x150
- Gully Pit
- KA — Roofwater Kerb Adaptor

NOTES

1. Development height datum PSM 54321, RL 18.352 AHD.
2. All Access Chambers are Ø1050 unless shown otherwise.
3. All Stormwater pipes are RCP Cl. 2 unless shown otherwise.
4. All roof water pipes are Ø150 uPVC Class SN4 unless shown otherwise.
5. All roof water is on a nom. 0.5 metre alignment unless shown otherwise.
6. Surface level of gully pit is on lip line of centre of grate.
7. Roofwater IOYJ's located at inside front boundaries are to have a grated inspection opening at surface level to allow excess flow surcharge.

B	AMENDED	6/04	SM
A	ORIGINAL ISSUE	1/02	
REVISIONS		DATE	APPROVED

© REDLAND SHIRE COUNCIL

DISCLAIMER. The authors shall have no liability or responsibility to the user or any other person or entity with respect to any liability, loss or damage caused or alleged to be caused, directly or indirectly, by the adoption and use of these Standard Drawings including, but not limited to, any interruption of service, loss of business or anticipatory profits, or consequential damages resulting from the use of these Standard Drawings. Persons must not rely on these Standard Drawings as the equivalent of, or a substitute for, project-specific design and assessment by an appropriately qualified professional.

Redland SHIRE COUNCIL

SAMPLE AS CONSTRUCTED PLAN
STORMWATER & ROOFWATER DRAINAGE

DRAINAGE
Standard Drawing
D–RSC–7

A | B

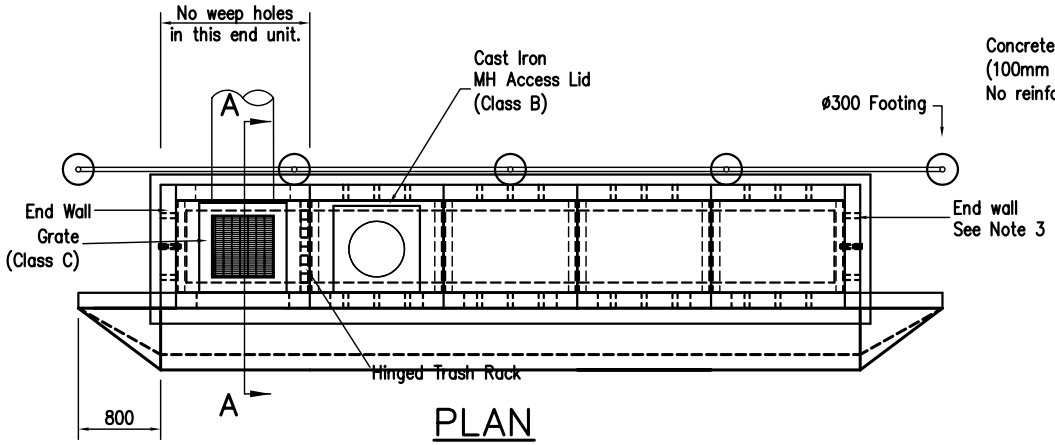

PLAN

Scale 1:50

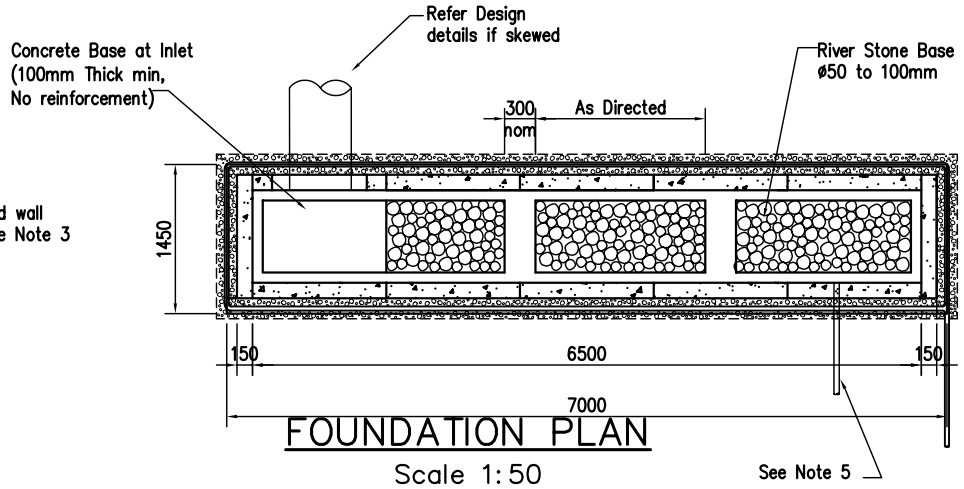

FOUNDATION PLAN

Scale 1:50

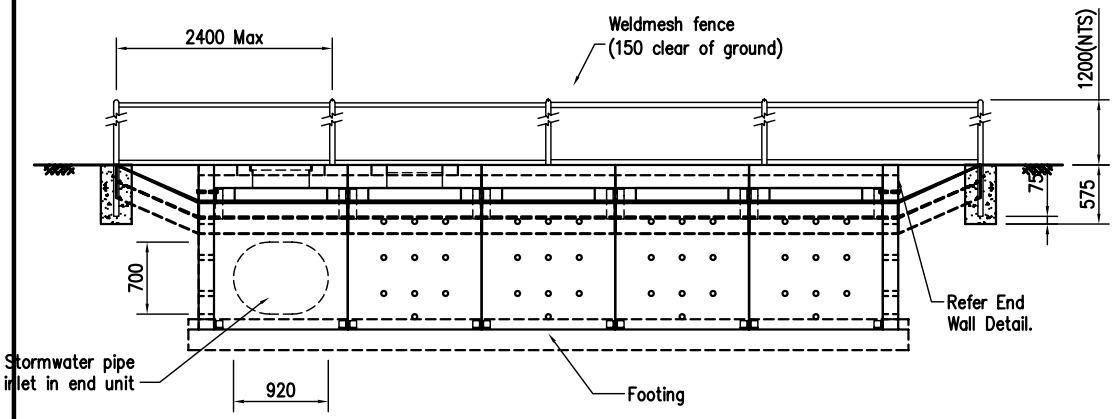

FRONT ELEVATION

Scale 1:50

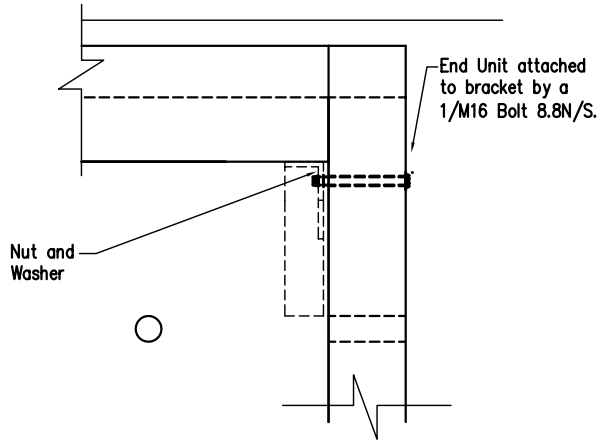

ENDWALL DETAIL

Scale 1:10

NOTES

1. Refer also standard drawings D-RSC-9 and D-RSC-10
2. Pre-cast concrete to be minimum grade N40 in accordance with AS1379 and AS3600
3. Reinforcing fabric to be in accordance with AS4671.
   All steel flats Grade 250 to AS3678
4. Both ends of assembled units to be enclosed by precast concrete end walls 150mm thick.
5. Provide 50mm dia (Nom) poly pipe outlet at approx 1% grade to outlet as directed on site

The number of units and length of the dissapator is determined by the outlet flow capacity from the units for the design storm required (usually 50% AEP) and the available width of outlet to create a wide sheet flow.

A	ORIGINAL ISSUE	6/04	SM
	REVISIONS	DATE	APPROVED

© REDLAND SHIRE COUNCIL

DISCLAIMER. The authors shall have no liability or responsibility to the user or any other person or entity with respect to any liability, loss or damage caused or alleged to be caused, directly or indirectly, by the adoption and use of these Standard Drawings including, but not limited to, any interruption of service, loss of business or anticipatory profits, or consequential damages resulting from the use of these Standard Drawings. Persons must not rely on these Standard Drawings as the equivalent of, or a substitute for, project-specific design and assessment by an appropriately qualified professional.

Redland SHIRE COUNCIL

STORMWATER FLOW DISSIPATOR
TYPICAL LAYOUT DETAILS
SHEET 1 OF 3

Standard Drawing
D-RSC-8
A

NOTES

1. Refer also standard drawings D-RSC-8 and D-RSC-10
2. All steel to be hot dip galvanised.
3. All concrete to be N40, with a minimum cover of 50mm to all reinforcement.

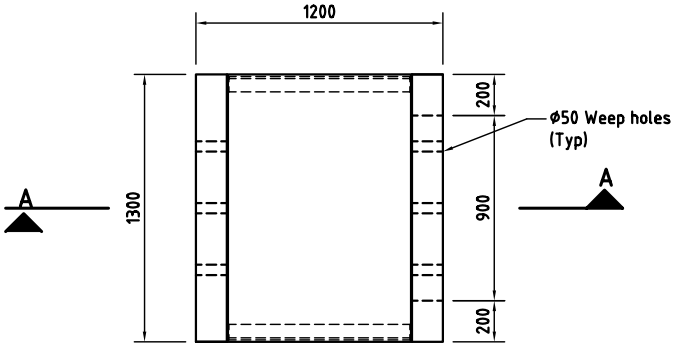

PLAN

Scale 1:25

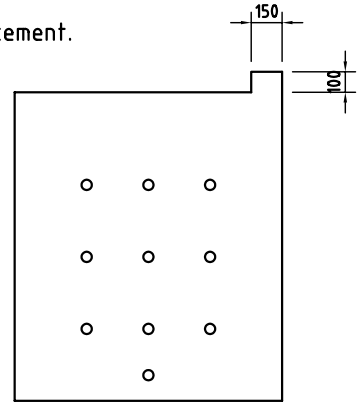

END WALL ELEVATION

Scale 1:25

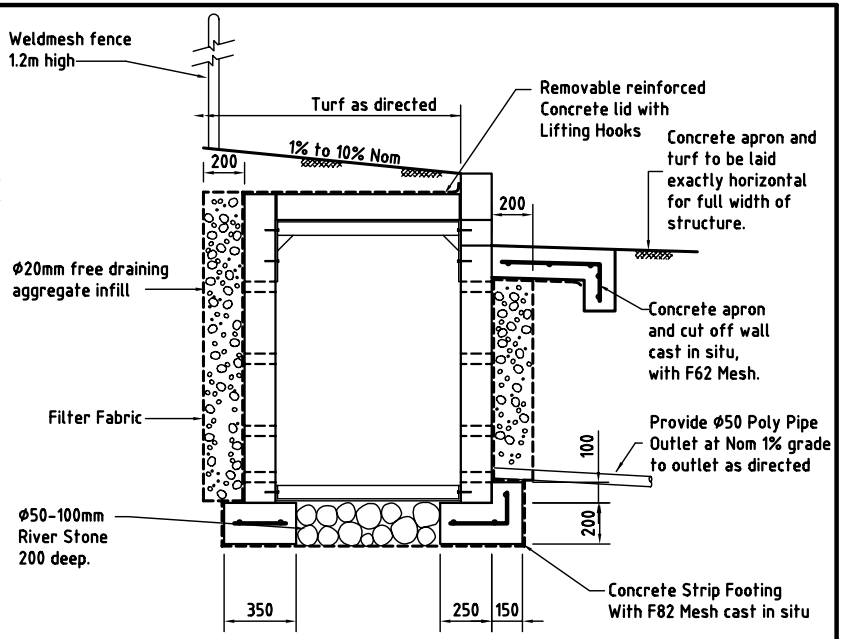

SECTION A-A

Scale 1:25

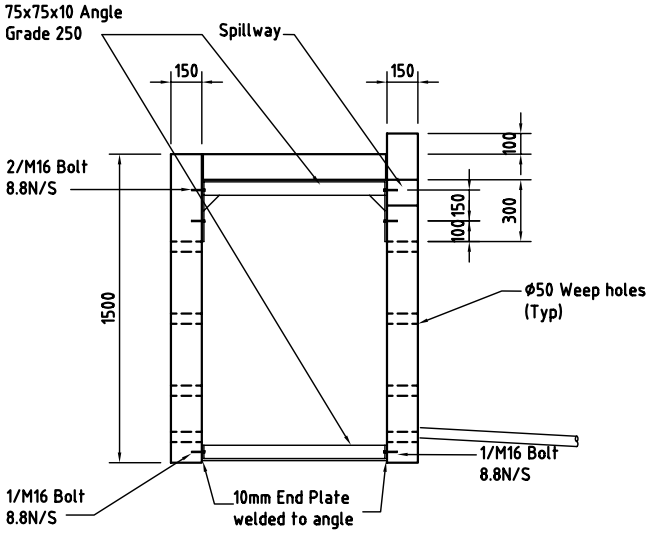

LHS ELEVATION

Scale 1:25

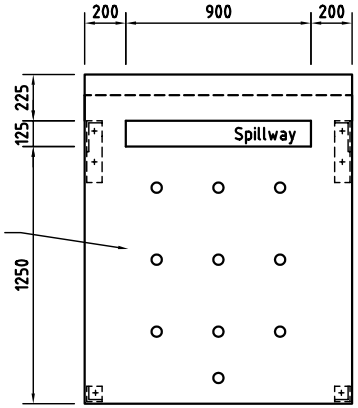

FRONT ELEVATION

Scale 1:25

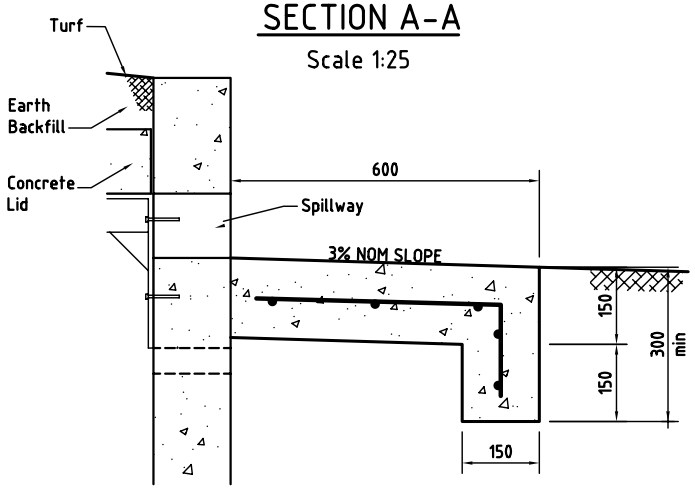

APRON DETAIL

Scale 1:25

A	ORIGINIAL ISSUE	6/04	SM
	REVISIONS	DATE	APPROVED

REDLAND SHIRE COUNCIL

DISCLAIMER The authors shall have no liability or responsibility to the user or any other person or entity with respect to any liability, loss or damage caused or alleged to be caused, directly or indirectly, by the adoption and use of these Standard Drawings including, but not limited to, any interruption of service, loss of business or anticipatory profits, or consequential damages resulting from the use of these Standard Drawings. Persons must not rely on these Standard Drawings as the equivalent of, or a substitute for, project-specific design and assessment by an appropriately qualified professional.

Redland SHIRE COUNCIL

STORMWATER FLOW DISSIPATOR UNIT STRUCTURE DETAILS

SHEET 2 OF 3

DRAINAGE
Standard Drawing

D-RSC-9

A

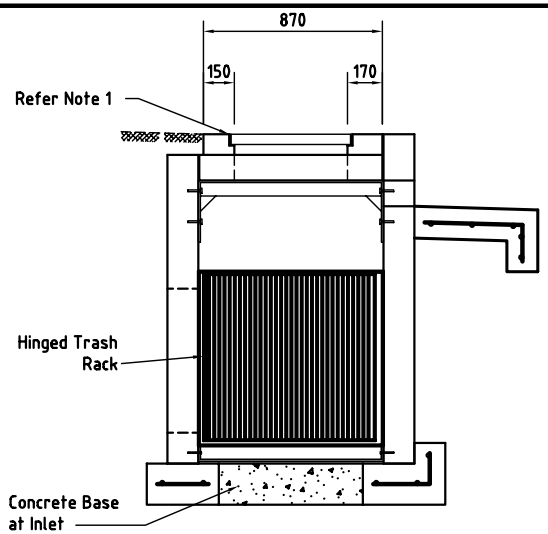

SECTION A-A

(Refer Sheet 1)

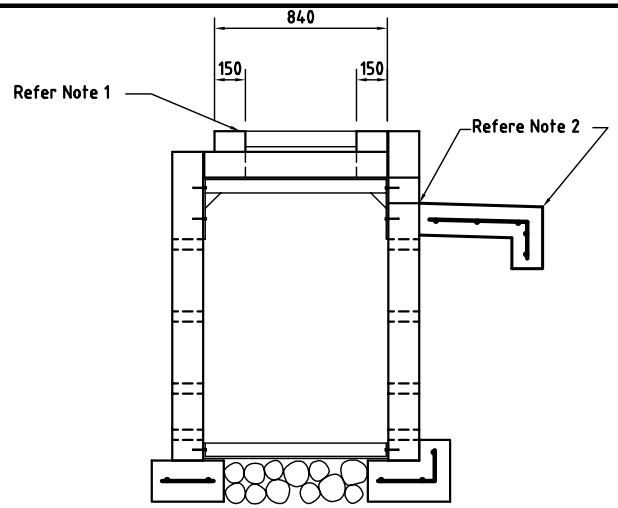

SECTION OF ACCESS UNIT

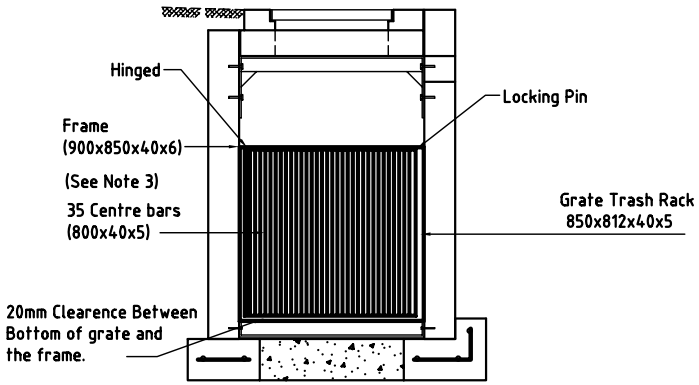

TRASH RACK DETAIL

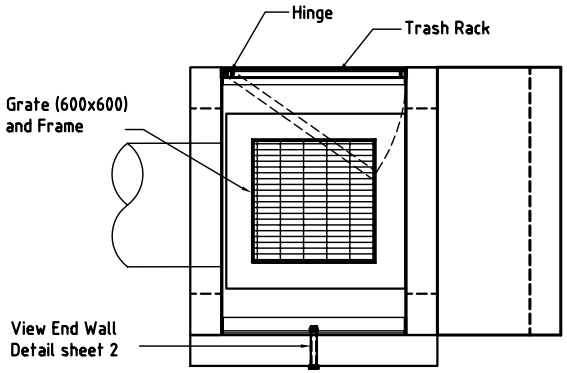

PLAN OF GRATE UNIT

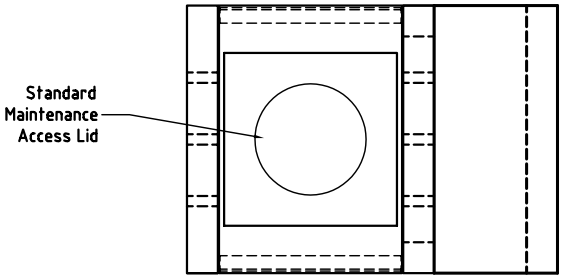

PLAN OF ACCESS UNIT

NOTES

1. Refer also standard drawings D-RSC-8 ans D-RSC-9
2. Access lid and grate to be installed at same level and grade as ground profile.
3. Lip of spillway outlet and lip of apron to be constructed exactly level for the full width of the structure.
4. The height of the trash rack may be varied to match the depth of the dissipator as required

Scale 1:25

A	ORIGNIAL ISSUE	6/04	SM
REVISIONS		DATE	APPROVED

© REDLAND SHIRE COUNCIL

DISCLAIMER. The authors shall have no liability or responsibility to the user or any other person or entity with respect to any liability, loss or damage caused or alleged to be caused, directly or indirectly, by the adoption and use of these Standard Drawings including, but not limited to, any interruption of service, loss of business or anticipatory profits, or consequential damages resulting from the use of these Standard Drawings. Persons must not rely on these Standard Drawings as the equivalent of, or a substitute for, project-specific design and assessment by an appropriately qualified professional.

Redland SHIRE COUNCIL

STORMWATER FLOW DISSIPATOR GATE, TRASH RACK & ACCESS UNIT DETAILS

SHEET 3 OF 3

DRAINAGE
Standard Drawing
D-RSC-10
A

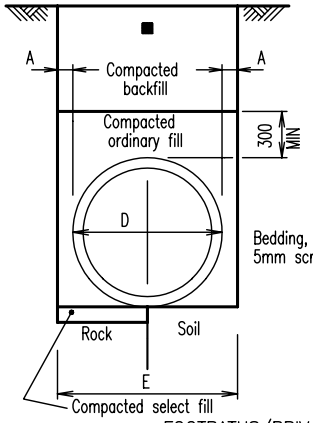

FOOTPATHS/PRIVATE PROPERTY

TYPE 1
Conforms to Support Type U AS 3725

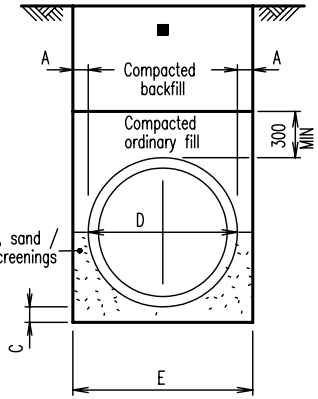

TYPE 2
Conforms to Support Type H1 AS 3725

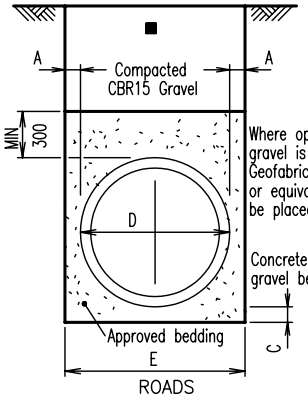

ROADS
TYPE 3
SAND SURROUND

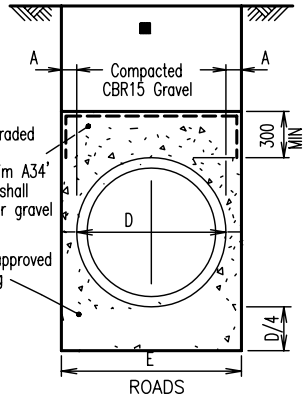

ROADS
TYPE 4
CONCRETE OR GRAVEL SURROUND

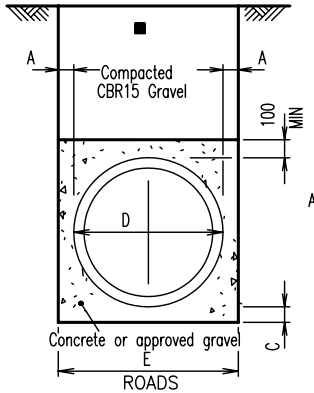

ROADS
TYPE 5
CONCRETE OR GRAVEL ENCASEMENT

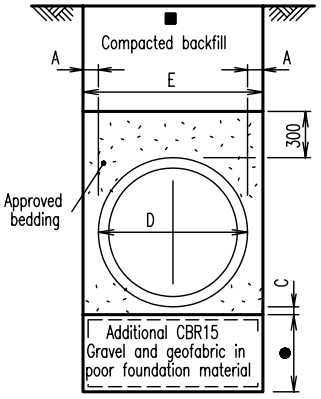

Footpath / Private Property / Roads
TYPE 6
BEDDING IN POOR GROUND

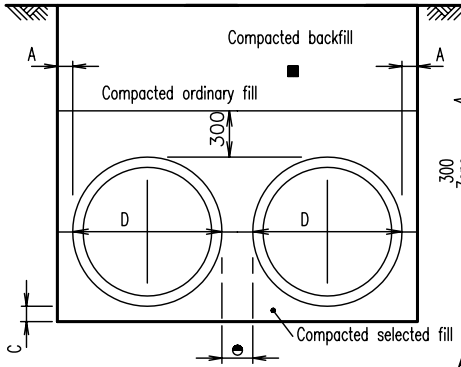

TYPE 7
BEDDING OF MULTIPLE PIPES
Conforms to Support Type H1

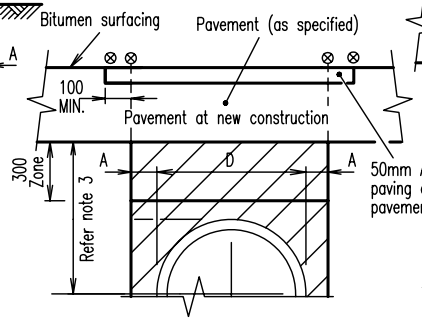

ALTERNATIVE A
AT NEW PAVEMENTS ON RESIDENTIAL STREETS & RURAL ROADS AND EXISTING SEALED PAVEMENTS

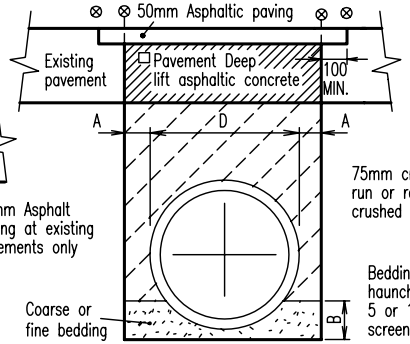

ALTERNATIVE B

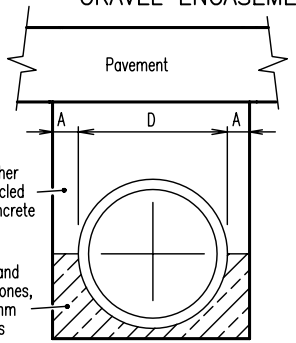

ALTERNATVE C

AT EXISTING SURFACED PAVEMENTS ON INDUSTRIAL, TRUNK COLLECTOR, SUB-ARTERIAL & ARTERIAL STREETS / ROADS

NOMINAL Ø culvert D(mm)	MINIMUM width A (mm)	HAUNCH depth B	Bedding depth C	Allowable width,E(m)	
				DES	MAX
300	300	36	100	1.0	1.1
375	300	45	100	1.1	1.2
450	300	53	100	1.1	1.3
525	300	61	100	1.2	1.5
600	300	69	100	1.3	1.6
750	300	85	100	1.5	1.8
900	300	103	100	1.6	1.9
1050	300	120	100	1.8	2.1
1200	300	135	100	2.0	2.2
1350	300	150	100	2.1	2.4
1500	300	169	100	2.3	2.7
1650	330	184	150	2.6	2.9
1800	360	200	150	2.8	3.1
1950	390	222	150	3.1	3.3
2100	420	239	150	3.4	3.5
2400	480	270	150	3.9	4.2
2700	540	303	150	4.3	4.6
3000	600	335	150	4.9	5.0

Bedding & Haunch material (Gravel, loam, sand or mixture) grading

AS Sieve Size	% Passing by mass	
	Type 1 – Pipes ≤ ø1200	Type 2 – Pipes > ø1350
19.0	100	98 – 100
9.5	–	35 – 50
4.75	–	5 – 10
2.36	40 – 100	0 – 2
0.425	15 – 70	0 – 1
0.075	3 – 30	0 – 1

LEGEND

- □ Pavement. Refer project documentation for detail
- ⊗ Saw cut at existing pavement
- ◓ Pipes : 300 when NOMINAL D < 600
  600 when NOMINAL D 600 – 1800
  900 when NOMINAL D > 1800
  Dimensions can be reduced to 150 MIN for non mechanical compaction of backfill
- ■ Refer Alternative A, B and C for backfill requirements at existing and new pavements.
- ● Depth to be approved by the Superintendent
- Gravel (MIN CBR15) backfill
- No fines concrete backfill (8 parts 10mm NOM size aggregate to 1 part cement).

NOTES:

1. Selected backfill in all cases shall be carried through to the wings and continued 300 thick for the length and height of wings.
2. Bedding compaction (Compacted selected fill / sand bedding)
   Cohesive material – 95% standard compaction
   Non-cohesive material – density index of 70 MIN, refer AS 1289.E5.1
   Sand – compact by flooding and use of vibrators.
3. Backfill compaction
   Compacted gravel layer under road pavement 95% standard compaction.
   Compacted CBR15 Gravel 90% standard compaction – below 300mm zone.
   Compacted backfill – at footpaths / private property 90% standard compaction.
   MAX. densities determined by standard compaction tests to AS 1289.5.1.1.
4. Refer project drawings for types and/or alternatives to be adopted.
5. Type U & Type H1 to conform to AS 3725.
6. Dimension A can be reduced to 150 MIN for non mechanical compaction of backfill
7. Pipes are to be designed to their correct strength class under all construction loads, dead loads and in-service loads.
8. All dimensions in millimetres.

A	ORIGINAL ISSUE	6/04	SM
	REVISIONS	DATE	APPROVED

© REDLAND SHIRE COUNCIL

DISCLAIMER. The authors shall have no liability or responsibility to the user or any other person or entity with respect to any liability, loss or damage caused or alleged to be caused, directly or indirectly, by the adoption and use of these Standard Drawings including, but not limited to, any interruption of service, loss of business or anticipatory profits, or consequential damages resulting from the use of these Standard Drawings. Persons must not rely on these Standard Drawings as the equivalent of, or a substitute for, project-specific design and assessment by an appropriately qualified professional.

Redland SHIRE COUNCIL

EXCAVATION, BEDDING AND BACKFILLING OF CONCRETE/ FIBRE REINFORCED DRAINAGE PIPES

DRAINAGE
Standard Drawing
D-RSC-11
A

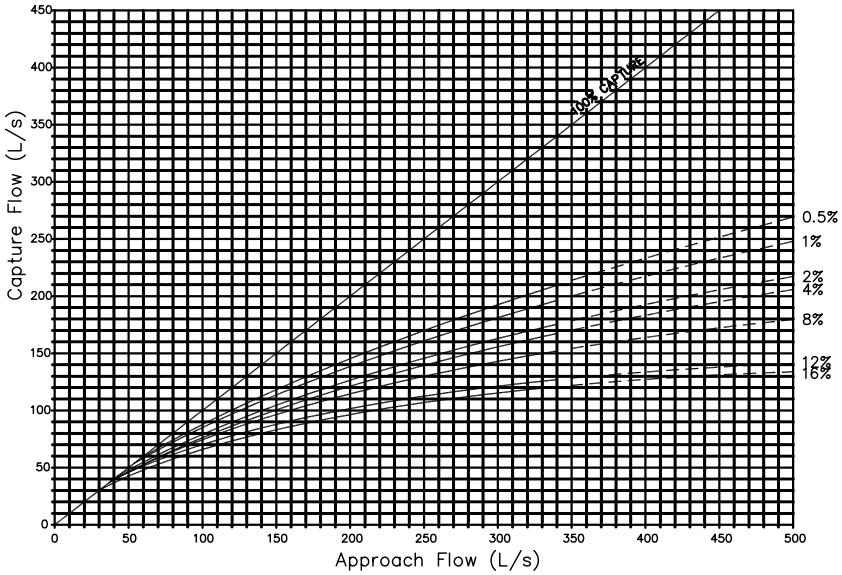

2.5% Road Crossfall

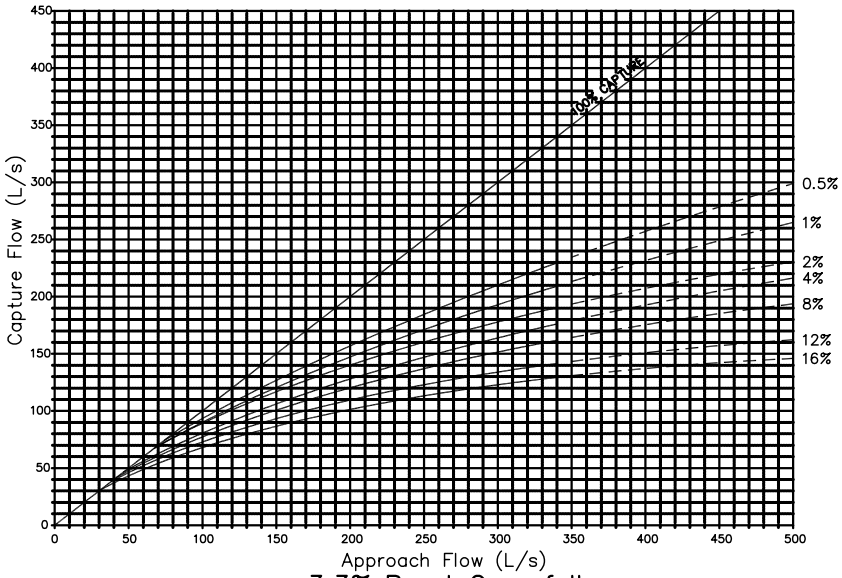

3.3% Road Crossfall

NOTES

1. CHARTS TO BE USED TO DETERMINE THE HYDRAULIC CAPTURE FOR RSC ROADWAY STORMWATER CATCHPITS. REFER STANDARD DRAWINGS D-RSC-3 AND D-RSC-6.
2. DATA BASED ON TESTING UNDERTAKEN AT URBAN WATER RESOURCE CENTRE, UNIVERSITY OF SOUTH AUSTRLALIA FOR BRISBANE CITY COUNCIL, GOLD COAST CITY COUNCIL AND QUEENSLAND DEPARTMENT OF MAIN ROADS, MARCH 2001 AND NOVEMBER 2002. (NO EXTRAPOLATION BEYOND THE LIMITS OF THE CHARTS SHOULD BE UNDERTAKEN.)
3. CAPTURE BASED ON MAXIMUM CHAMBER WATER LEVEL 150mm BELOW CHANNEL INVERT LEVEL.
4. 10% BLOCKAGE FACTOR APPLIED TO GRATE.

LEGEND

__%. KERB AND CHANNEL LONGITUDINAL SLOPE (S)

———— BASED ON ACTUAL DATA

- - - - - EXTRAPOLATED DATA

A	ORIGINAL ISSUE	6/04	SM
	REVISIONS	DATE	APPROVED

© REDLAND SHIRE COUNCIL

DISCLAIMER. The authors shall have no liability or responsibility to the user or any other person or entity with respect to any liability, loss or damage caused or alleged to be caused, directly or indirectly, by the adoption and use of these Standard Drawings including, but not limited to, any interruption of service, loss of business or anticipatory profits, or consequential damages resulting from the use of these Standard Drawings. Persons must not rely on these Standard Drawings as the equivalent of, or a substitute for, project-specific design and assessment by an appropriately qualified professional.

Redland SHIRE COUNCIL

LIP IN LINE CATCHPITS HYDRAULIC CAPTURE CHARTS TYPE M1 KERB AND CHANNEL ON GRADE, 2400mm LINTEL

DRAINAGE
Standard Drawing
D-RSC-12
A

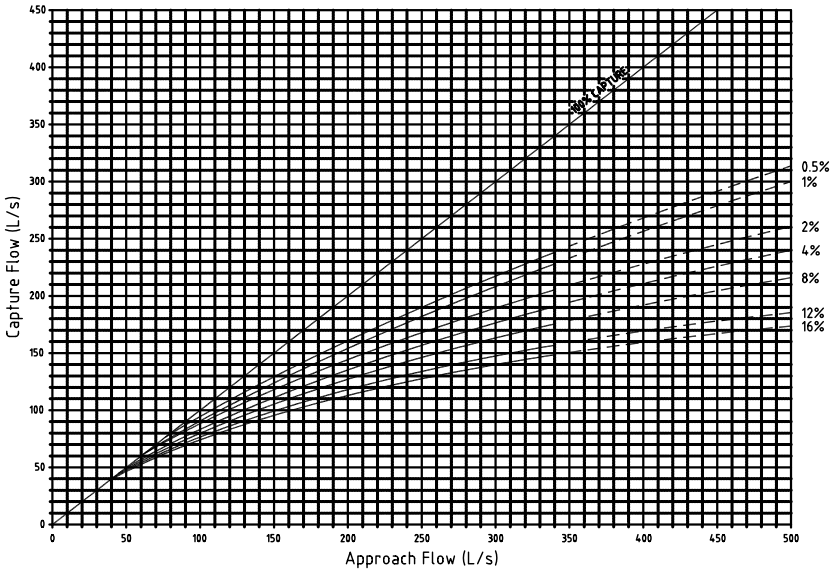

2.5% Road Crossfall

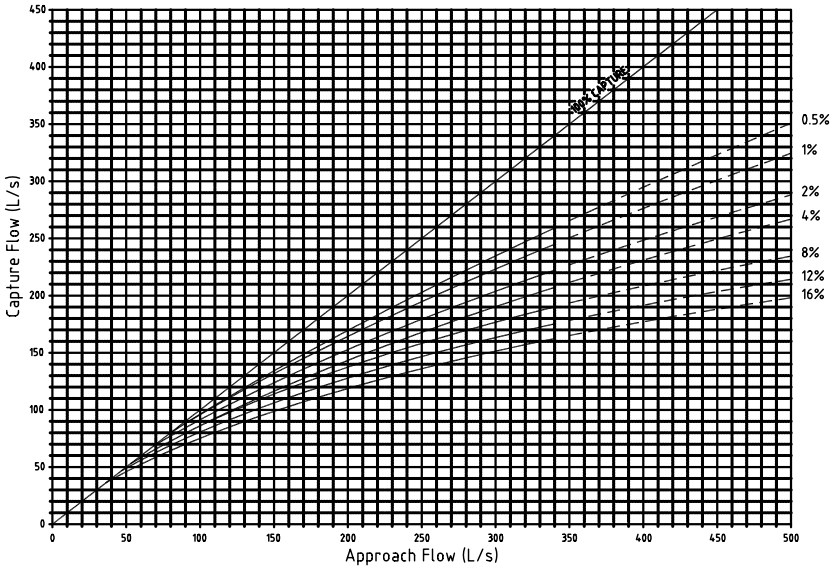

3.3% Road Crossfall

NOTES

1. CHARTS TO BE USED TO DETERMINE THE HYDRAULIC CAPTURE FOR RSC ROADWAY STORMWATER CATCHPITS. REFER STANDARD DRAWINGS D-RSC-3 AND D-RSC-6.
2. DATA BASED ON TESTING UNDERTAKEN AT URBAN WATER RESOURCE CENTRE, UNIVERSITY OF SOUTH AUSTRLALIA FOR BRISBANE CITY COUNCIL, GOLD COAST CITY COUNCIL AND QUEENSLAND DEPARTMENT OF MAIN ROADS, MARCH 2001 AND NOVEMBER 2002. (NO EXTRAPOLATION BEYOND THE LIMITS OF THE CHARTS SHOULD BE UNDERTAKEN.)
3. CAPTURE BASED ON MAXIMUM CHAMBER WATER LEVEL:
   150mm BELOW CHANNEL INVERT LEVEL FOR S_O = 0.5 TO 3%.
   350mm BELOW CHANNEL INVERT LEVEL FOR S_O > 3%
4. 10% BLOCKAGE FACTOR APPLIED TO GRATE.

LEGEND

___%.	KERB AND CHANNEL LONGITUDINAL SLOPE (S_o)
————	BASED ON ACTUAL DATA
- - - - -	EXTRAPOLATED DATA

A	ORIGINAL ISSUE	6/04	
REVISIONS		DATE	APPROVED

© REDLAND SHIRE COUNCIL

DISCLAIMER. The authors shall have no liability or responsibility to the user or any other person or entity with respect to any liability, loss or damage caused or alleged to be caused, directly or indirectly, by the adoption and use of these Standard Drawings including, but not limited to, any interruption of service, loss of business or anticipatory profits, or consequential damages resulting from the use of these Standard Drawings. Persons must not rely on these Standard Drawings as the equivalent of, or a substitute for, project-specific design and assessment by an appropriately qualified professional.

Redland SHIRE COUNCIL

LIP IN LINE CATCHPITS HYDRAULIC CAPTURE CHARTS TYPE M1 KERB AND CHANNEL ON GRADE, 3600mm LINTEL

DRAINAGE
Standard Drawing
D-RSC-13
A

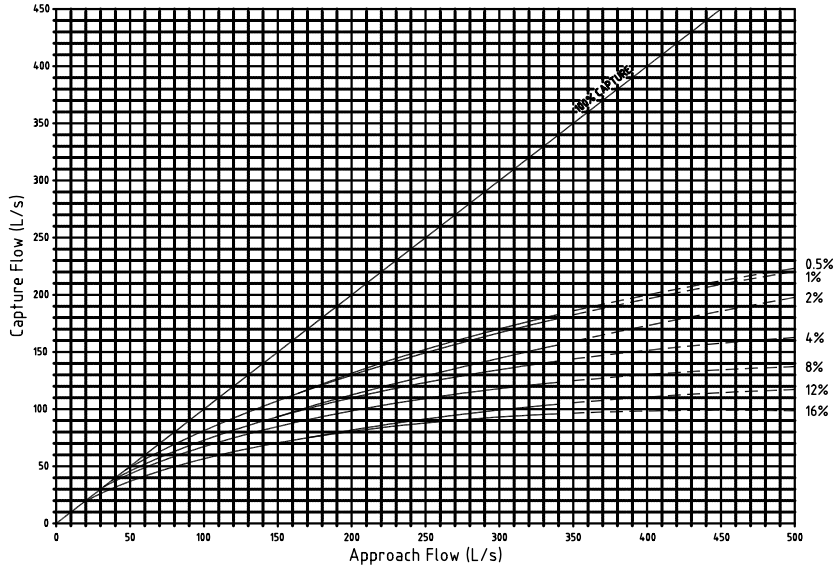

2.5% Road Crossfall

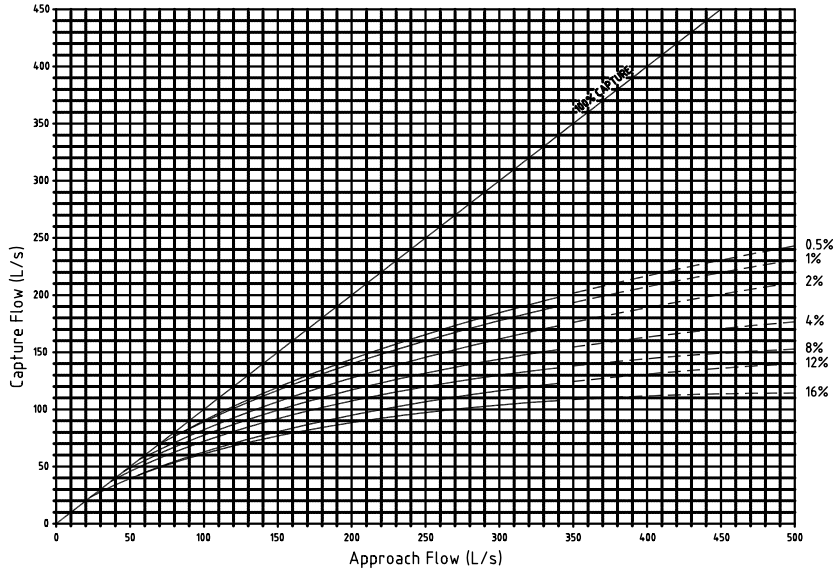

3.3% Road Crossfall

NOTES

1. CHARTS TO BE USED TO DETERMINE THE HYDRAULIC CAPTURE FOR RSC ROADWAY STORMWATER CATCHPITS. REFER STANDARD DRAWINGS D-RSC-3 AND D-RSC-6.
2. DATA BASED ON TESTING UNDERTAKEN AT URBAN WATER RESOURCE CENTRE, UNIVERSITY OF SOUTH AUSTRLALIA FOR BRISBANE CITY COUNCIL, GOLD COAST CITY COUNCIL AND QUEENSLAND DEPARTMENT OF MAIN ROADS, MARCH 2001 AND NOVEMBER 2002. (NO EXTRAPOLATION BEYOND THE LIMITS OF THE CHARTS SHOULD BE UNDERTAKEN.)
3. CAPTURE BASED ON MAXIMUM CHAMBER WATER LEVEL 150mm BELOW CHANNEL INVERT LEVEL.
4. 10% BLOCKAGE FACTOR APPLIED TO GRATE.

LEGEND

___%.	KERB AND CHANNEL LONGITUDINAL SLOPE (S_o)
————	BASED ON ACTUAL DATA
– – – – –	EXTRAPOLATED DATA

A	ORIGINAL ISSUE	6/04	SW
REVISIONS		DATE	APPROVED

© REDLAND SHIRE COUNCIL

DISCLAIMER. The authors shall have no liability or responsibility to the user or any other person or entity with respect to any liability, loss or damage caused or alleged to be caused, directly or indirectly, by the adoption and use of these Standard Drawings including, but not limited to, any interruption of service, loss of business or anticipatory profits, or consequential damages resulting from the use of these Standard Drawings. Persons must not rely on these Standard Drawings as the equivalent of, or a substitute for, project-specific design and assessment by an appropriately qualified professional.

Redland SHIRE COUNCIL

LIP IN LINE CATCHPITS HYDRAULIC CAPTURE CHARTS TYPE B1 KERB AND CHANNEL ON GRADE, 2400mm LINTEL

DRAINAGE
Standard Drawing
D-RSC-14
A

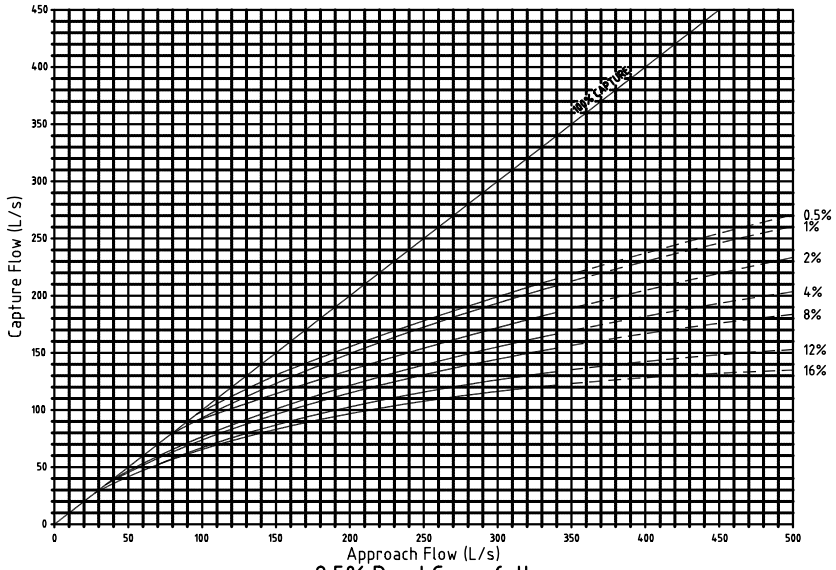

2.5% Road Crossfall

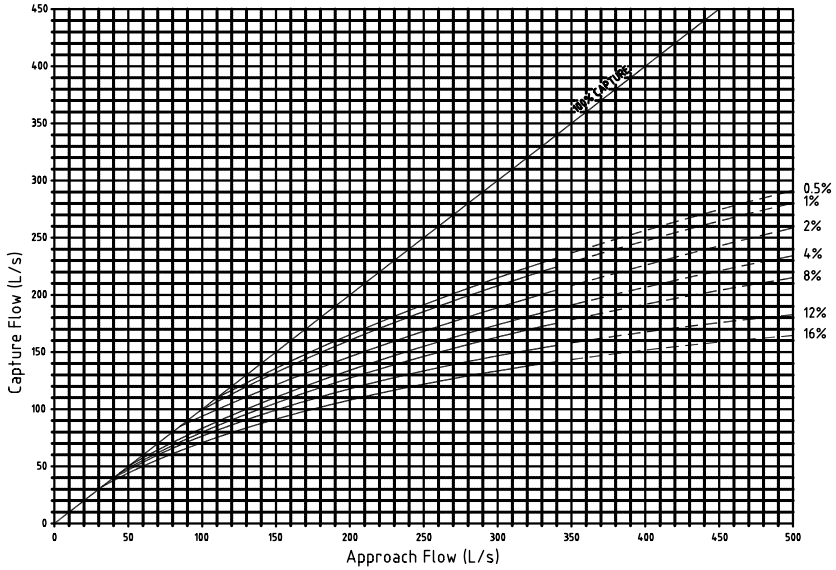

3.3% Road Crossfall

NOTES

1. CHARTS TO BE USED TO DETERMINE THE HYDRAULIC CAPTURE FOR RSC ROADWAY STORMWATER CATCHPITS. REFER STANDARD DRAWINGS D-RSC-3 AND D-RSC-6.
2. DATA BASED ON TESTING UNDERTAKEN AT URBAN WATER RESOURCE CENTRE, UNIVERSITY OF SOUTH AUSTRLALIA FOR BRISBANE CITY COUNCIL, GOLD COAST CITY COUNCIL AND QUEENSLAND DEPARTMENT OF MAIN ROADS, MARCH 2001 AND NOVEMBER 2002. (NO EXTRAPOLATION BEYOND THE LIMITS OF THE CHARTS SHOULD BE UNDERTAKEN.)
3. CAPTURE BASED ON MAXIMUM CHAMBER WATER LEVEL:
   150mm BELOW CHANNEL INVERT LEVEL FOR S_O = 0.5 TO 3%.
   350mm BELOW CHANNEL INVERT LEVEL FOR S_O > 3%
4. 10% BLOCKAGE FACTOR APPLIED TO GRATE.

LEGEND

___%.	KERB AND CHANNEL LONGITUDINAL SLOPE (S_o)
————	BASED ON ACTUAL DATA
- - - - -	EXTRAPOLATED DATA

A	ORIGINAL ISSUE	6/04	SM
	REVISIONS	DATE	APPROVED

© REDLAND SHIRE COUNCIL

DISCLAIMER. The authors shall have no liability or responsibility to the user or any other person or entity with respect to any liability, loss or damage caused or alleged to be caused, directly or indirectly, by the adoption and use of these Standard Drawings including, but not limited to, any interruption of service, loss of business or anticipatory profits, or consequential damages resulting from the use of these Standard Drawings. Persons must not rely on these Standard Drawings as the equivalent of, or a substitute for, project-specific design and assessment by an appropriately qualified professional.

Redland SHIRE COUNCIL

LIP IN LINE CATCHPITS HYDRAULIC CAPTURE CHARTS TYPE B1 KERB AND CHANNEL ON GRADE, 3600mm LINTEL

DRAINAGE
Standard Drawing
D-RSC-15
A

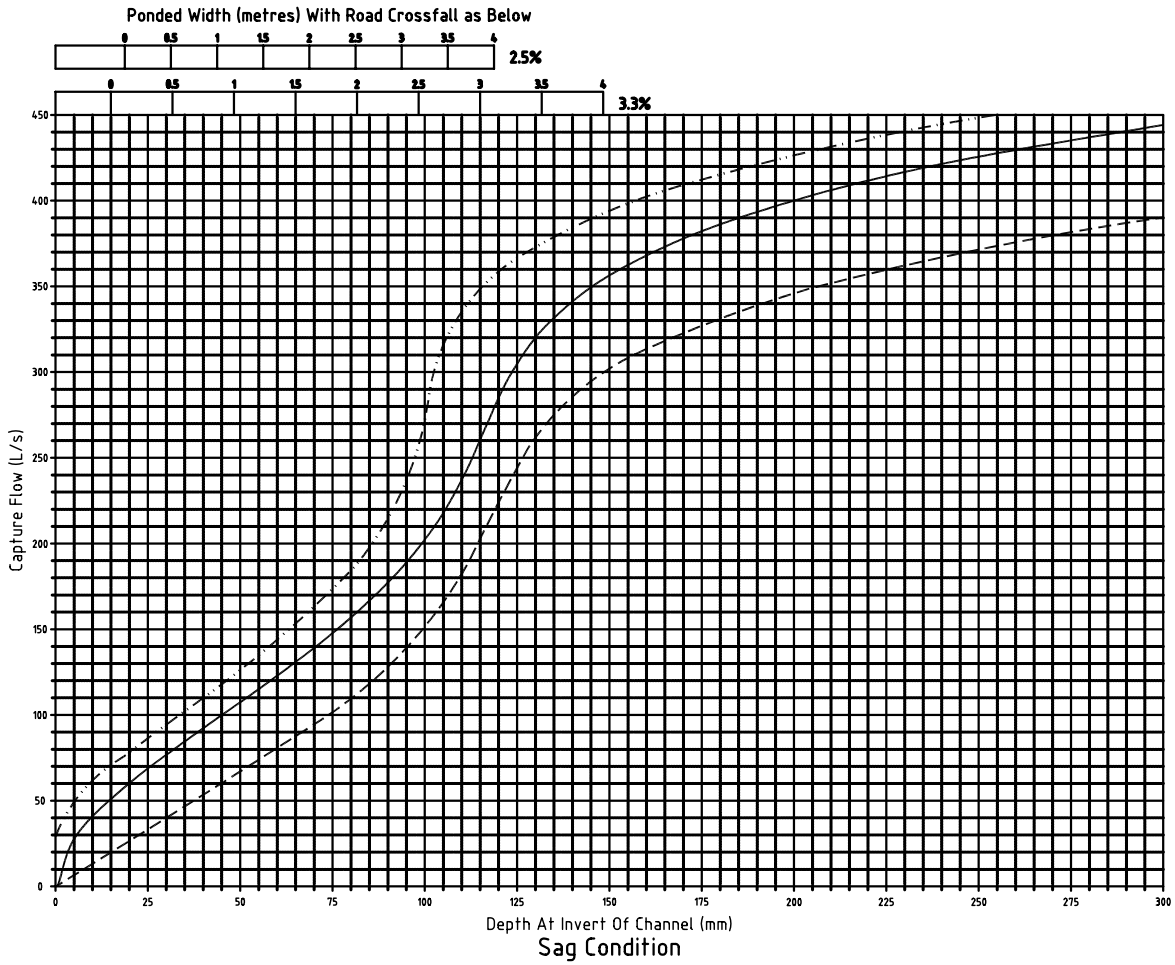

NOTES

1. CHARTS TO BE USED TO DETERMINE THE HYDRAULIC CAPTURE FOR RSC ROADWAY STORMWATER CATCHPITS. REFER STANDARD DRAWINGS D-RSC-3 AND D-RSC-6.
2. DATA BASED ON TESTING UNDERTAKEN AT URBAN WATER RESOURCE CENTRE, UNIVERSITY OF SOUTH AUSTRLALIA FOR BRISBANE CITY COUNCIL, GOLD COAST CITY COUNCIL AND QUEENSLAND DEPARTMENT OF MAIN ROADS, MARCH 2001 AND NOVEMBER 2002. (NO EXTRAPOLATION BEYOND THE LIMITS OF THE CHARTS SHOULD BE UNDERTAKEN.)
3. CAPTURE BASED ON MAXIMUM CHAMBER WATER LEVEL 150mm BELOW CHANNEL INVERT LEVEL.
4. 100% BLOCKAGE FACTOR APPLIED TO GRATE.

LEGEND

- - - - - 2400mm LINTEL
——— 3600mm LINTEL
—·—·— 4800mm LINTEL

A	ORIGINAL ISSUE	6/04	SM
	REVISIONS	DATE	APPROVED

© REDLAND SHIRE COUNCIL

DISCLAIMER. The authors shall have no liability or responsibility to the user or any other person or entity with respect to any liability, loss or damage caused or alleged to be caused, directly or indirectly, by the adoption and use of these Standard Drawings including, but not limited to, any interruption of service, loss of business or anticipatory profits, or consequential damages resulting from the use of these Standard Drawings. Persons must not rely on these Standard Drawings as the equivalent of, or a substitute for, project-specific design and assessmen by an appropriately qualified professional.

Redland SHIRE COUNCIL

LIP IN LINE CATCHPITS HYDRAULIC CAPTURE CHARTS TYPE M1 KERB AND CHANNEL SAG CONDITIONS, ALL LINTELS

DRAINAGE
Standard Drawing
D-RSC-16
A

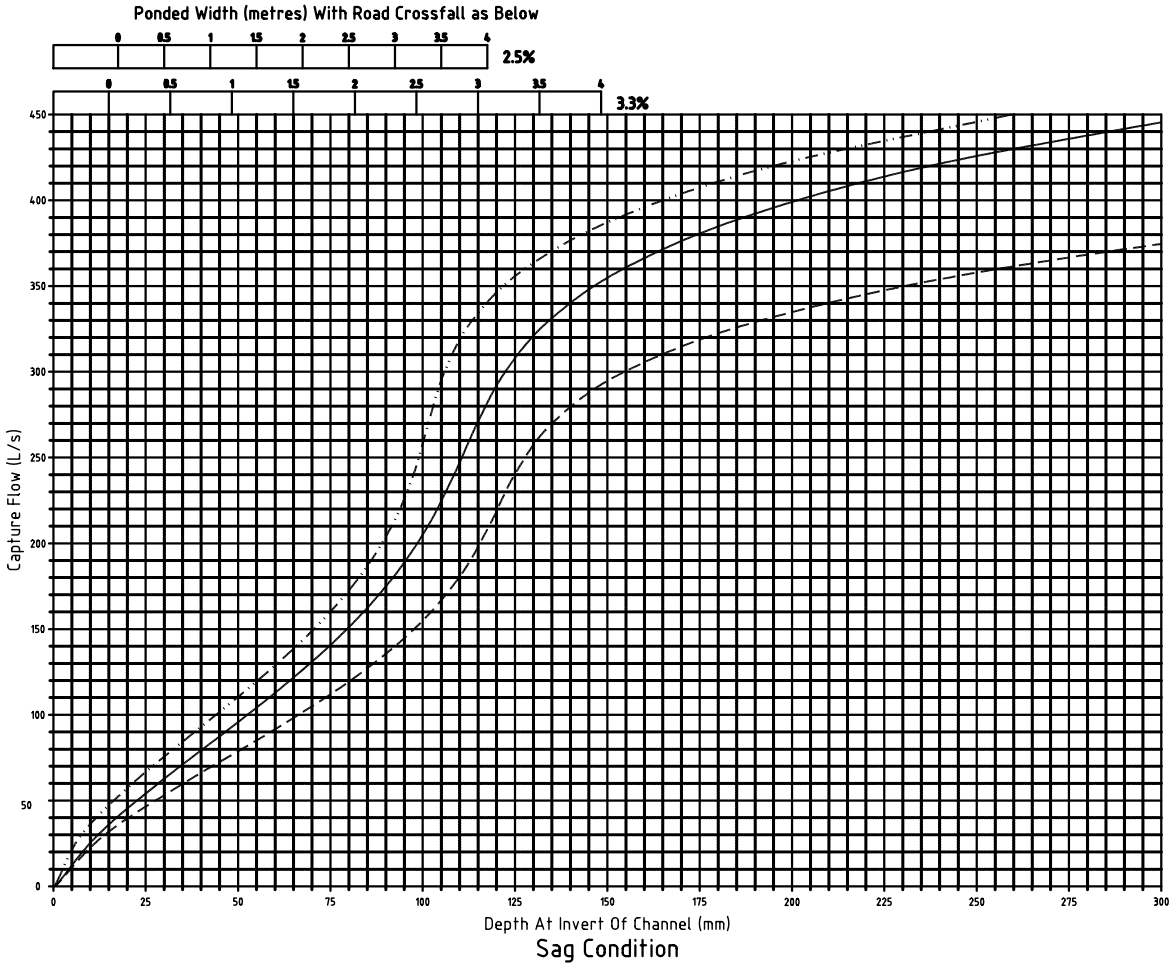

NOTES

1. CHARTS TO BE USED TO DETERMINE THE HYDRAULIC CAPTURE FOR RSC ROADWAY STORMWATER CATCHPITS. REFER STANDARD DRAWINGS D-RSC-3 AND D-RSC-6.
2. DATA BASED ON TESTING UNDERTAKEN AT URBAN WATER RESOURCE CENTRE, UNIVERSITY OF SOUTH AUSTRLALIA FOR BRISBANE CITY COUNCIL, GOLD COAST CITY COUNCIL AND QUEENSLAND DEPARTMENT OF MAIN ROADS, MARCH 2001 AND NOVEMBER 2002. (NO EXTRAPOLATION BEYOND THE LIMITS OF THE CHARTS SHOULD BE UNDERTAKEN.)
3. CAPTURE BASED ON MAXIMUM CHAMBER WATER LEVEL 150mm BELOW CHANNEL INVERT LEVEL.
4. 100% BLOCKAGE FACTOR APPLIED TO GRATE.

LEGEND

- - - - - 2400mm LINTEL
——— 3600mm LINTEL
—·—·— 4800mm LINTEL

A	ORIGINAL ISSUE	6/04	SM
	REVISIONS	DATE	APPROVED

© REDLAND SHIRE COUNCIL

DISCLAIMER. The authors shall have no liability or responsibility to the user or any other person or entity with respect to any liability, loss or damage caused or alleged to be caused, directly or indirectly, by the adoption and use of these Standard Drawings including, but not limited to, any interruption of service, loss of business or anticipatory profits, or consequential damages resulting from the use of these Standard Drawings. Persons must not rely on these Standard Drawings as the equivalent of, or a substitute for, project-specific design and assessment by an appropriately qualified professional.

Redland SHIRE COUNCIL

LIP IN LINE CATCHPITS HYDRAULIC CAPTURE CHARTS TYPE B1 KERB AND CHANNEL SAG CONDITIONS, ALL LINTELS

DRAINAGE
Standard Drawing
D-RSC-17
A

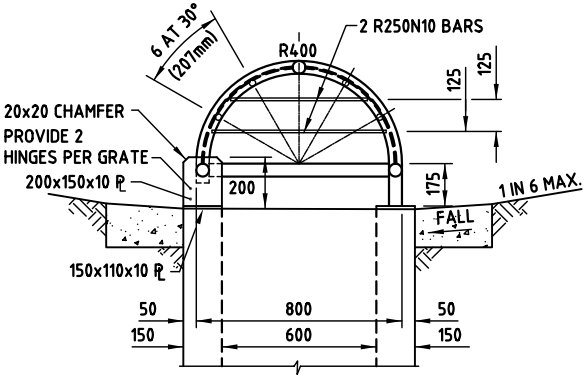

SECTION A–A

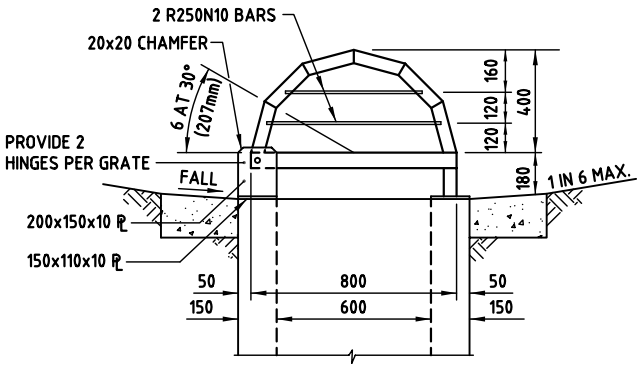

SECTION A–A

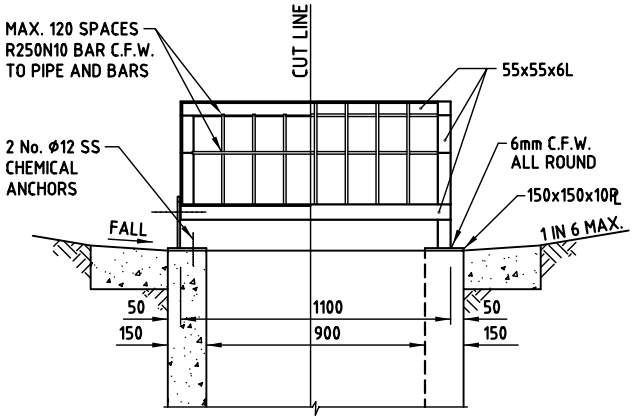

SECTION B–B

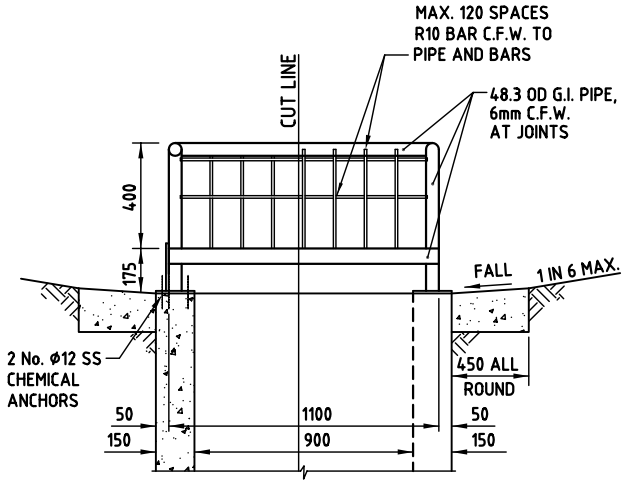

SECTION B–B

TYPE 1 – PIPE CONSTRUCTION

NOTES:

1. CONCRETE TO BE GRADE N25.
2. GRATE AND HINGES TO BE HOT DIPPED GALVANISED TO AS/NZS 4680 AFTER FABRICATION.
3. THE ISOMETRIC VIEW IS SIMILAR IN TYPE 1 AND TYPE 2.
4. PIPE INVERT LEVELS AS PER DRAINAGE DETAILS.
5. DIMENSIONS ARE IN MILLIMETRES UNLESS SHOWN OTHERWISE.
6. LOCATION OF DOME TYPE COVER TO BE APPROVED BY LOCAL GOVERNMENT

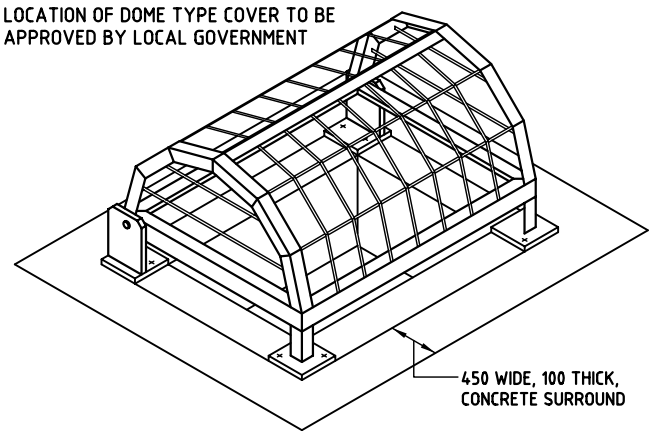

ISOMETRIC VIEW

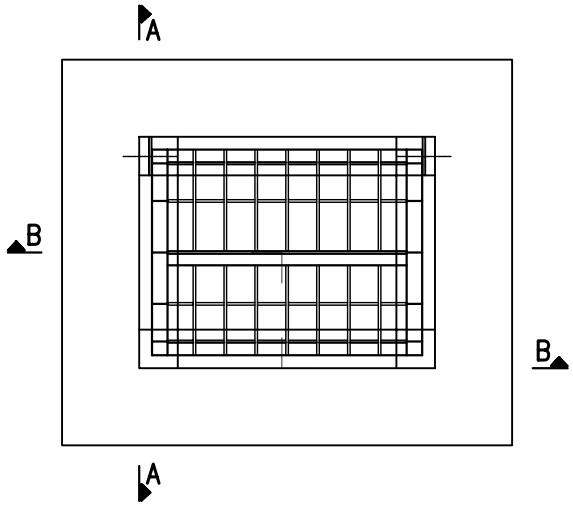

PLAN

TYPE 2 – ANGLE CONSTRUCTION

A	ORIGINAL ISSUE	02/05	
	REVISIONS	DATE	APPROVED

© REDLAND SHIRE COUNCIL

DISCLAIMER. The authors shall have no liability or responsibility to the user or any other person or entity with respect to any liability, loss or damage caused or alleged to be caused, directly or indirectly, by the adoption and use of these Standard Drawings including, but not limited to, any interruption of service, loss of business or anticipatory profits, or consequential damages resulting from the use of these Standard Drawings. Persons must not rely on these Standard Drawings as the equivalent of, or a substitute for, project-specific design and assessment by an appropriately qualified professional.

Redland SHIRE COUNCIL

FIELD INLET PIT
DOME TYPE COVER
(NON PEDESTRIAN AREAS)

DRAINAGE
Standard Drawing
D–RSC–18
A

REDLAND SHIRE COUNCIL APPROVED STANDARD DRAWINGS

STD. DWG. No.	DESCRIPTIONS
	IPWEAQ DRAWINGS
W-0010	AIR VALVE PIT – ø50 AND ø80 AIR VALVES
W-0030	BACKFLOW PREVENTION DEVICE SLAB AND POLE MOUNTED CUBICLE
W-0061	C.I. HYDRANT AND VALVE BOXES
	REDLAND SHIRE COUNCIL DRAWINGS
W-RSC-2	SAMPLE AS-CONSTRUCTED PLAN – WATER RETICULATION
W-RSC-3	WATER CONNECTIONS, SINGLE, DOUBLE AND GHOST ABOVE GROUND METER
W-RSC-4	WATER CONNECTIONS, SUBDIVISIONAL
W-RSC-5	TYPICAL WATER RETICULATION LAYOUT AT CUL-DE-SAC
	WATER SERVICES ASSOCIATION OF AUSTRALIA DRAWINGS (WSAA)
WAT-1102	TYPICAL MAINS CONSTRUCTION – RETICULATION MAIN ARRANGEMENTS
WAT-1103	TYPICAL MAINS CONSTRUCTION – DISTRIBUTION AND TRANSFER MAINS
WAT-1105	TYPICAL MAINS CONSTRUCTION – CONNECTION TO EXISTING MAINS
	EMBEDMENT / TRENCHFILL AND RESTRAINTS
WAT-1200	SOIL CLASSIFICATION GUIDELINES AND ALLOWABLE BEARING PRESSURES FOR ANCHORS AND THRUST BLOCKS
WAT-1201	EMBEDMENT AND TRENCHFILL – TYPICAL ARRANGEMENT
WAT-1202	STANDARD EMBEDMENT – ALL PIPE TYPES
WAT-1203	SPECIAL EMBEDMENTS – INADEQUATE AND POOR FOUNDATION
WAT-1204	SPECIAL EMBEDMENTS – CONCRETE GEOTEXTILE AND CEMENT STABILISED SYSTEMS
WAT-1205	THRUST BLOCK DETAILS – CONCRETE BLOCKS
WAT-1207	THRUST AND ANCHOR BLOCKS – GATE VALVES AND VERTICAL BENDS
WAT-1208	RESTRAINED JOINT SYSTEM – DN100 TO DN375 DI MAINS
WAT-1209	TRENCH DRAINAGE – BULKHEADS & TRENCHSTOP
WAT-1210	TRENCH DRAINAGE – TYPICAL SYSTEMS
WAT-1211	BURIED CROSSINGS – UNDER OBSTRUCTIONS
WAT-1212	BURIED CROSSINGS – MAJOR ROADWAYS
WAT-1213	BURIED CROSSINGS – RAILWAYS
WAT-1214	BURIED CROSSINGS – BORED & JACKED ENCASING PIPE DETAILS
	INSTALLATION PRACTICES / STRUCTURES
WAT-1300	VALVE AND HYDRANT IDENTIFICATION – IDENTIFICATION MARKERS & MARKER POSTS
WAT-1301	TYPICAL VALVE & HYDRANT INSTALLATION – VALVE ARRANGEMENT
WAT-1302	TYPICAL VALVE & HYDRANT INSTALLATION – HYDRANTS AND AIR RELIEF VALVES
WAT-1303	TYPICAL SURFACE FITTING INSTALLATION – GATE VALVE SURFACE BOXES – NON TRAFFICABLE
WAT-1304	TYPICAL SURFACE FITTING INSTALLATION – GATE VALVE SURFACE BOXES – TRAFFICABLE
WAT-1305	TYPICAL SURFACE FITTING INSTALLATION – HYDRANT SURFACE BOXES – TRAFFICABLE AND NON-TRAFFICABLE
WAT-1306	TYPICAL SURFACE FITTING INSTALLATION – HYDRANT SURFACE BOXES – TRAFFICABLE
WAT-1307	TYPICAL APPURTENANCE INSTALLATION – SCOUR ARRANGEMENTS
WAT-1308	TYPICAL APPURTENANCE INSTALLATION – VALVE CHAMBERS
WAT-1309	TYPICAL APPURTENANCE INSTALLATION – PRESSURE REDUCING VALVES (PRV)
WAT-1310	TYPICAL ABOVE GROUND INSTALLATIONS – AQUEDUCT
WAT-1311	AERIAL CROSSINGS – AQUEDUCT PROTECTION GRILLE
WAT-1312	AERIAL CROSSINGS – BRIDGE CROSSING CONCEPTS
WAT-1313	FLANGED JOINTS – BOLTING DETAILS

STD. DWG. No.	DESCRIPTIONS
	FABRICATION DETAILS
WAT-1400	STEEL PIPE JOINTING – BUTT WELDING OF JOINTS
WAT-1401	STEEL PIPE JOINTING – RUBBER RING JOINT SPIGOT BANDS
WAT-1402	TYPICAL STEEL PIPE JOINTING – WELDED PIPE COLLARS
WAT-1403	TYPICAL STEEL FABRICATION – BENDS
WAT-1404	TYPICAL STEEL FABRICATION – ACCESS OPENING FOR PIPES ≥ DN750
WAT-1405	TYPICAL STEEL FABRICATION – DISMANTLING AND FLEXIBLE JOINTS
WAT-1406	TYPICAL STEEL FABRICATION – VALVE CONNECTION & BYPASS
WAT-1407	DI INSTALLATION – VALVE BYPASS ARRANGEMENT FOR DI AND GRP PIPE
WAT-1408	EXTERNAL CORROSION PROTECTION – CEMENT LINED STEEL – FOR DN 300 TO DN 1200

D	AMENDED	6/02	
C	AMENDED	1/02	
B	AMENDED	1/99	
A	ORIGINAL ISSUE	1/98	
	REVISIONS	DATE	APPROVED

© REDLAND SHIRE COUNCIL

DISCLAIMER. The authors shall have no liability or responsibility to the user or any other person or entity with respect to any liability, loss or damage caused or alleged to be caused, directly or indirectly, by the adoption and use of these Standard Drawings including, but not limited to, any interruption of service, loss of business or anticipatory profits, or consequential damages resulting from the use of these Standard Drawings. Persons must not rely on these Standard Drawings as the equivalent of, or a substitute for, project-specific design and assessment by an appropriately qualified professional.

Redland SHIRE COUNCIL

INDEX

STANDARD DRAWINGS

WATER

WATER

Standard Drawing

W-RSC-1

A B C D

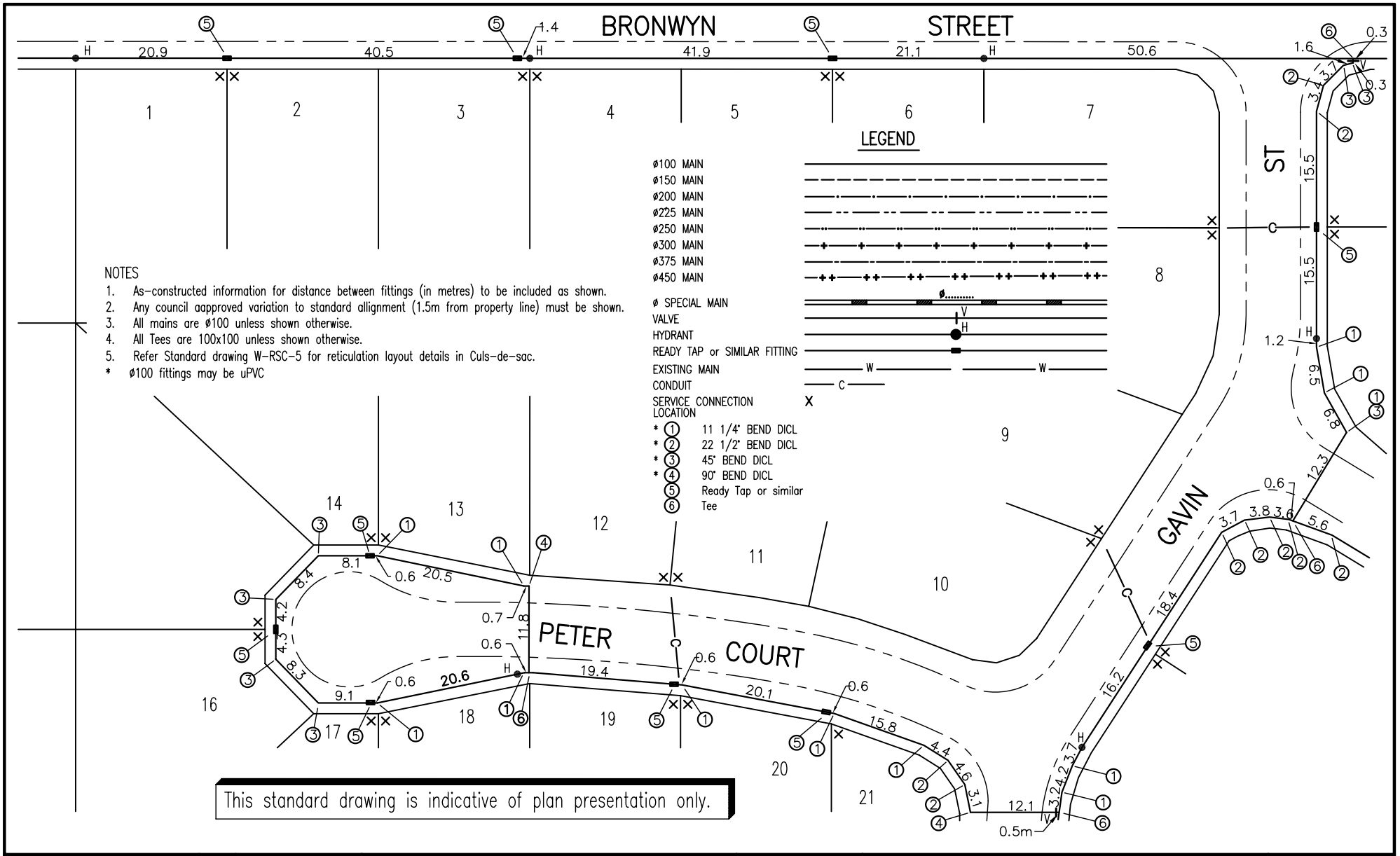

C	AMENDED	6/04	
B	AMENDED	1/99	
A	ORIGINAL ISSUE	1/98	
REVISIONS		DATE	APPROVED

© REDLAND SHIRE COUNCIL

DISCLAIMER. The authors shall have no liability or responsibility to the user or any other person or entity with respect to any liability, loss or damage caused or alleged to be caused, directly or indirectly, by the adoption and use of these Standard Drawings including, but not limited to, any interruption of service, loss of business or anticipatory profits, or consequential damages resulting from the use of these Standard Drawings. Persons must not rely on these Standard Drawings as the equivalent of, or a substitute for, project-specific design and assessment by an appropriately qualified professional.

Redland SHIRE COUNCIL

SAMPLE AS CONSTRUCTED PLAN WATER RETICULATION

WATER
Standard Drawing
W-RSC-2

A B C

MARK NO	DESCRIPTION
1.	20mm Water Meter. Dimensions to AS 3565 Fig 1.1
2B.	Meter tail piece with 20mm BSP suppllied with Water Meter (Pre drilled to suite wire seal)
3.	20mm male MI to 20mm OD capillary adaptor
3A.	Rt. angled 20mm lockable F & F ball valve
4.	20mm 90° gunmetal bend
6.	32 OD Polythene Type PE80B Class 16
9.	25mm x 32mm OD poly TPNFPR bonnet poly ferrule stop cock.
9a.	GM38 or Similar (Brass), 32 FI x 32 OD (Poly)
10.	20mm OD Type A annealed copper tube
12.	32mm OD poly x 20 MI BSP connector
14.	20mm FI to 20mm OD x 20mm OD capillary tee.
16.	20mm SP x 15 MI BSP PVC adaptor (Note – provided with thread to suit tap)
19.	75mm x 50mm x 900mm Hardwood Post, white in Colour.

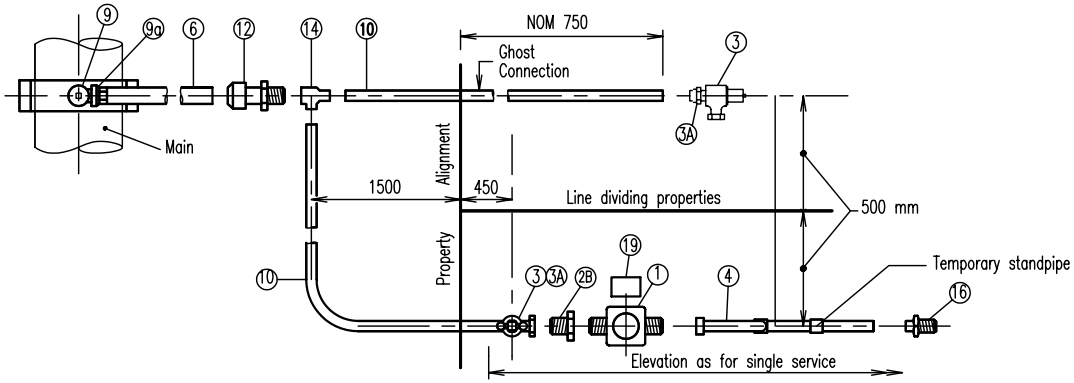

NEW NOM Ø20 SERVICE PLUS GHOST CONNECTION – PLAN

LONG SIDE CONNECTION

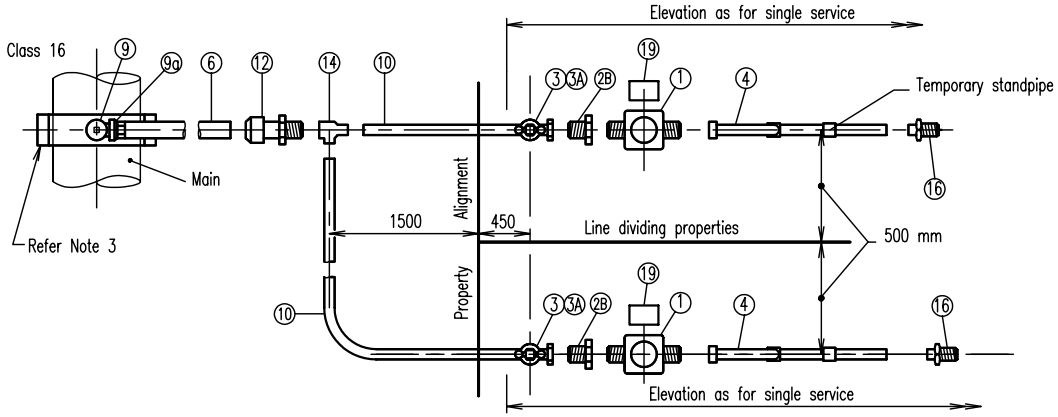

NEW NOM Ø20 DOUBLE SERVICE – PLAN

LONG SIDE CONNECTION

NOTES

1. Copper tubing and connectors
   (a) All copper tubing shall be in accordance with AS 1432.
   (b) All capillary and compression fittings shall be in accordance with AS 3688.
   (c) All capillary fittings shall have long engagement sockets.
2. Polythene pipe and connectors
   (a) All polythene pipe shall be MDPE Type PE80B Class 16 in accordance with AS 4130
   (b) All mechanical joint fittings shall be in accordance with AS 1460.
3. New mains are to have Readytap or similar connections. Existing mains are to have tapping bands.
4. Ghost connections shall be laid flat and buried.
5. All dimensions in millimetres.

D	AMENDED	1/02	
C	AMENDED	6/99	
B	AMENDED	1/99	
A	ORIGINAL ISSUE	1/98	
	REVISIONS	DATE	APPROVED

© REDLAND SHIRE COUNCIL

DISCLAIMER. The authors shall have no liability or responsibility to the user or any other person or entity with respect to any liability, loss or damage caused or alleged to be caused, directly or indirectly, by the adoption and use of these Standard Drawings including, but not limited to, any interruption of service, loss of business or anticipatory profits, or consequential damages resulting from the use of these Standard Drawings. Persons must not rely on these Standard Drawings as the equivalent of, or a substitute for, project-specific design and assessment by an appropriately qualified professional.

Redland SHIRE COUNCIL

WATER CONNECTIONS SINGLE, DOUBLE AND GHOST ABOVE GROUND METER

WATER

Standard Drawing

W–RSC–3

A B C D

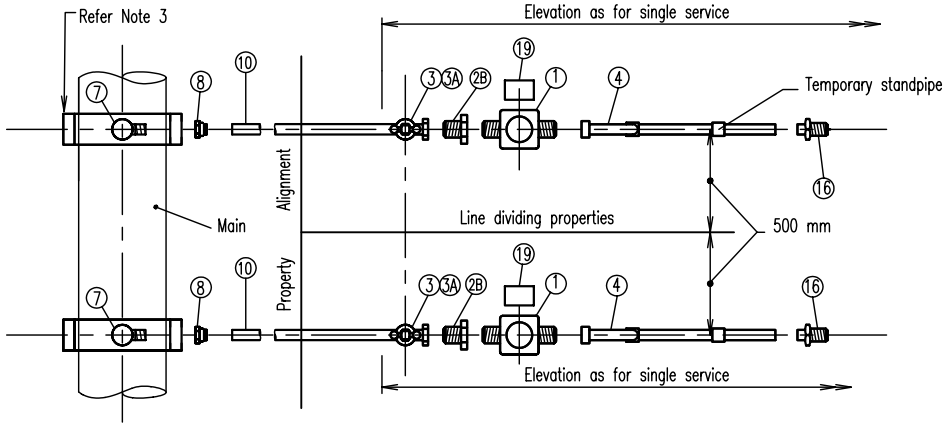

NEW NOM Ø20 DOUBLE SERVICE – PLAN

SHORT SIDE CONNECTION

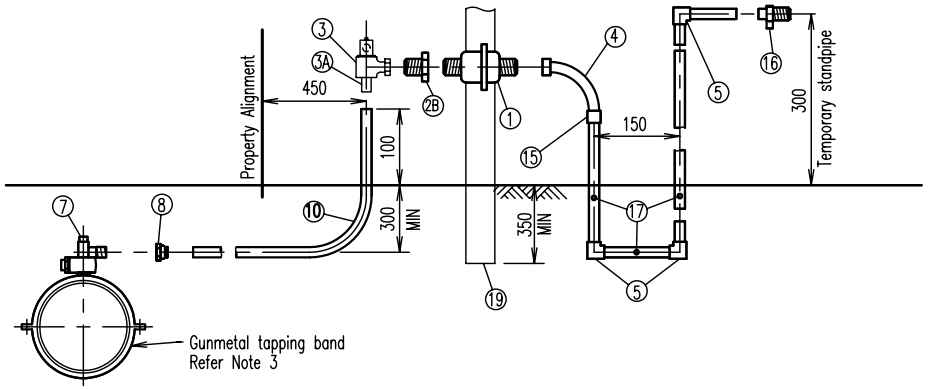

NEW NOM Ø20 SINGLE SERVICE – ELEVATION

SHORT SIDE CONNECTION

MARK NO	DESCRIPTION
1.	20mm Water Meter. Dimensions to AS 3565 Fig 1.1
2B.	As above ecept pre-drilled to suite wire seal.
3.	20mm male MI to 20mm OD capillary adaptor
3A.	Rt. angled 20mm lockable F&F ball valve
4.	20mm 90° gunmetal bend
5.	20mm 90° uPVC elbow solvent cement joint.
7.	20mm TPNFR ferrule stop cock
8.	20mm ferrule capillary adaptor.
10.	20mm OD Type A annealed copper tube
15.	25mm Cat. 18 Female iron connector
16.	20mm SP x 15 MI BSP PVC adaptor (Note – provide with thread to suite tap)
17.	20mm uPVC pipe or annealed copper tubing.
18.	Straight through 19mm DR brass ball valve (20mm male x 25mm male)
18A.	32 OD Polythene Type PE 80B class 16
19.	75mm x 50mm x 900mm Hardwood Post, White in Colour.

NOTES

1. Copper tubing and connectors
   (a) All copper tubing shall be in accordance with AS 1432.
   (b) All capillary and compression fittings shall be in accordance with AS 3688.
   (c) All capillary fittings shall have long engagement sockets.
2. Polythene pipe and connectors
   (a) All polythene pipe shall be MDPE Type PE80B Class 16 in accordance with AS 4130.
   (b) All mechanical joint fittings shall be in accordance with AS 1460.
3. New mains are to have Readytap or similar connections. Existing mains are to have tapping bands.
4. Ghost connections shall be laid flat and buried.
5. All dimensions in millimetres.

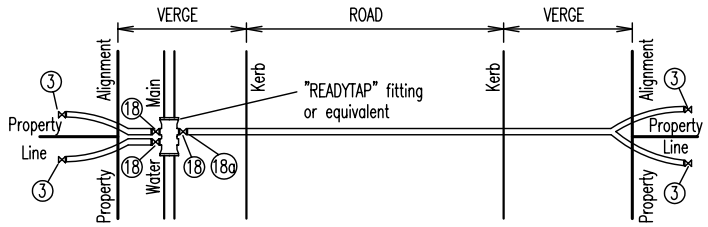

OPTIONAL FITTING

NTS

D	AMENDED	1/02	
C	AMENDED	6/99	
B	AMENDED	1/99	
A	ORIGINAL ISSUE	1/98	
REVISIONS		DATE	APPROVED

© REDLAND SHIRE COUNCIL

DISCLAIMER. The authors shall have no liability or responsibility to the user or any other person or entity with respect to any liability, loss or damage caused or alleged to be caused, directly or indirectly, by the adoption and use of these Standard Drawings including, but not limited to, any interruption of service, loss of business or anticipatory profits, or consequential damages resulting from the use of these Standard Drawings. Persons must not rely on these Standard Drawings as the equivalent of, or a substitute for, project-specific design and assessment by an appropriately qualified professional.

Redland SHIRE COUNCIL

WATER CONNECTIONS SUBDIVISIONAL

WATER

Standard Drawing

W–RSC–4

A B C D

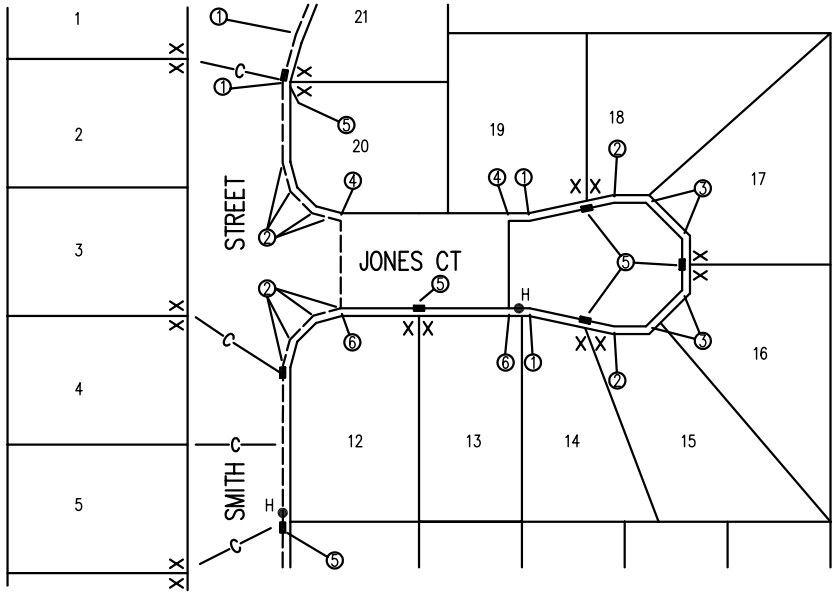

TYPICAL RETICULATION PLAN WHEN SERVICING MORE THAN 5 LOTS

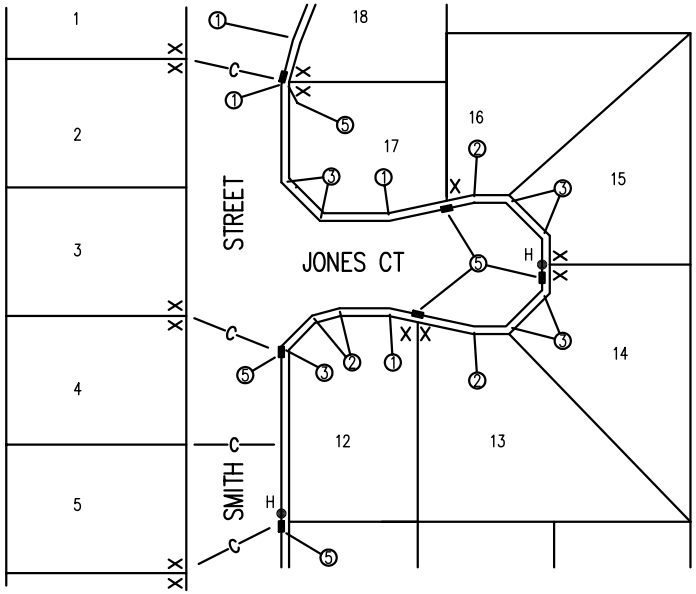

TYPICAL RETICULATION PLAN WHEN SERVICING 5 LOTS OR LESS

LEGEND

- ø100 MAIN
- ø150 MAIN
- ø200 MAIN
- ø225 MAIN
- ø250 MAIN
- ø300 MAIN
- ø375 MAIN
- ø450 MAIN
- ø SPECIAL MAIN
- VALVE
- HYDRANT
- READYTAP OR SIMILAR FITTING
- EXISTING MAIN
- CONDUIT
- SERVICE CONNECTION LOCATION

1. 11 1/4° BEND DICL
2. 22 1/2° BEND DICL
3. 45° BEND DICL
4. 90° BEND DICL
5. Readytap or Similar Fitting
6. Tee

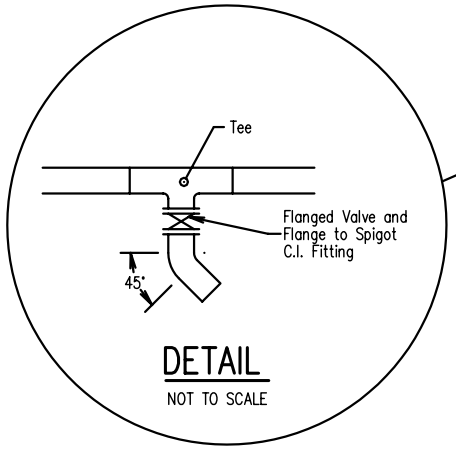

DETAIL

NOT TO SCALE

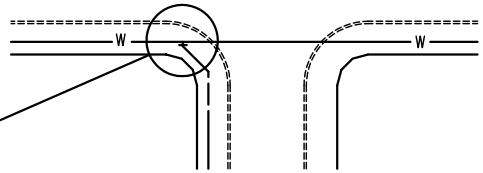

TYPICAL INTERSECTION DETAIL

NOT TO SCALE

NOTES

1. Any Council approved variation to standard alignment (1.5m from property line) must be shown.

D	AMENDED	6/04	
C	AMENDED	1/02	
B	AMENDED	1/99	
A	ORIGINAL ISSUE	1/98	
REVISIONS		DATE	APPROVED

© REDLAND SHIRE COUNCIL

DISCLAIMER. The authors shall have no liability or responsibility to the user or any other person or entity with respect to any liability, loss or damage caused or alleged to be caused, directly or indirectly, by the adoption and use of these Standard Drawings including, but not limited to, any interruption of service, loss of business or anticipatory profits, or consequential damages resulting from the use of these Standard Drawings. Persons must not rely on these Standard Drawings as the equivalent of, or a substitute for, project-specific design and assessment by an appropriately qualified professional.

Redland SHIRE COUNCIL

TYPICAL WATER RETICULATION LAYOUT AT CUL-DE-SAC

WATER

Standard Drawing

W-RSC-5

A B C D

REDLAND SHIRE COUNCIL APPROVED STANDARD DRAWINGS

STD. DWG. No.	DESCRIPTIONS
	IPWEAQ DRAWINGS
	ACCESS CHAMBERS (MAINTENANCE HOLES)
	ACCESS CHAMBERS
S-0020	1050mm NOM DIA – INSITU CONSTRUCTION
S-0022	1500mm NOM DIA – INSITU CONSTRUCTION
S-0024	RECTANGULAR, INCLUDING CAST IRON COVER AND FRAME
S-0025	CAST IRON COVER AND FRAME, CAST IRON CONCRETE FILLED COVER
S-0026	CAST IRON COVER AND FRAME, BOLT DOWN
S-0030	HOUSE CONNECTION BRANCHES
	PRESSURE MAINS
S-0070	PRESSURE MAIN DISCHARGE DETAILS
	PUMP STATIONS
	SUBMERSIBLE SEWAGE PUMPING STATION
S-0050	GENERAL ARRANGEMENT, 2000mm DIA.
S-0051	7.2m VENT POLE TERRAIN CAT 2 AND 3
S-0052	12.0m VENT POLE TERRAIN CAT 2 AND 3
S-0054	2000mm DIA, REINFORCEMENT, PRESSURE GAUGE ARRANGEMENT AIR RELEASE PIPEWORK DETAILS
S-0055	FABRICATED METALWORK SHEET 1
S-0056	FABRICATED METALWORK SHEET 2
S-0057	LIFT STATION SUBMERSIBLE, 1800mm DIA (0–20L/sec)
S-0058	PUMP STATION OVERFLOW
	SUBMERSIBLE SEWAGE PUMPING STATION
S-0059	GENERAL ARRANGEMENT, REINFORCEMENT, 2400mm DIA.
S-0060	ALUMINIUM COVERS AND FRAMES, 2400mm DIA.
	REDLAND SHIRE COUNCIL DRAWINGS
	AS CONSTRUCTED
S-RSC-2	SAMPLE AS CONSTRUCTED PLAN – SEWERAGE RETICULATION
	WATER SERVICES ASSOCIATION OF AUSTRALIA DRAWINGS (WSAA)
	PIPELINE LAYOUT
SEW-1101	DESIGN LAYOUTS – LONGITUDINAL SECTIONS
SEW-1102	DESIGN LAYOUTS – CONNECTION TO EXISTING SEWER SCHEDULE OF WORKS
* SEW-1103	PIPELAYING – TYPICAL ARRANGEMENTS
	EMBEDMENT / TRENCHFILL AND SUPPORT SYSTEMS
SEW-1200	SOIL CLASSIFICATION GUIDELINES AND ALLOWABLE BEARING PRESSURES FOR BULKHEADS
SEW-1201	EMBEDMENT AND TRENCHFILL – TYPICAL ARRANGEMENT
SEW-1202	STANDARD EMBEDMENT – FLEXIBLE AND RIGID PIPES
SEW-1203	SPECIAL EMBEDMENT – INADEQUATE FOUNDATIONS REQUIRING OVER EXCAVATION & REPLACEMENT

STD. DWG. No.	DESCRIPTIONS
SEW-1204	SPECIAL EMBEDMENT – SUPPORT UTILISING PILES
SEW-1205	SPECIAL EMBEDMENT – CONCRETE & STABILISED SUPPORTS
SEW-1206	TRENCH DRAINAGE – BULKHEADS AND TRENCHSTOP
SEW-1207	TRENCH DRAINAGE – TYPICAL SYSTEMS
	ACCESS STRUCTURES
SEW-1300	MAINTENANCE HOLES FOR SEWERS ≤ DN 300 – PRECAST TYPES P1 & P2
SEW-1301	MAINTENANCE HOLES FOR SEWERS ≤ DN 300 – CAST INSITU TYPES C1 & C2
SEW-1302	STANDARD MAINTENANCE HOLES – PIPE CONECTION DETAILS
SEW-1303	MAINTENANCE HOLES FOR SEWERS ≤ DN 300 – CHANGES IN LEVEL DETAILS
SEW-1304	MAINTENANCE HOLES FOR SEWERS ≤ DN 300 – TYPICAL CHANNEL ARRANGEMENTS
SEW-1305	MAINTENANCE HOLES – TYPICAL CHANNEL DETAILS
SEW-1306	MAINTENANCE HOLES – ALTERNATIVE DROP CONNECTIONS
SEW-1307	MAINTENANCE HOLES – STEP IRONS & LADDERS
SEW-1308	MAINTENANCE HOLES – TYPICAL MH COVER ARRANGEMENT
SEW-1309	MAINTENANCE HOLES – SEWERS DN 375 TO DN 750
SEW-1311	MAINTENANCE HOLES – DEPTH TO INVERT 6m TO 15m
SEW-1312	MAINTENANCE HOLES – DEPTH TO INVERT > 15m
SEW-1313	MAINTENANCE HOLE – CONNECTION DETAILS FOR DN 110 TO DN 450 PE PIPE
SEW-1314	MAINTENANCE SHAFTS – TYPICAL INSTALLATION
SEW-1315	MAINTENANCE SHAFTS – MS & VARIABLE BEND INSTALLATIONS
SEW-1316	MAINTENANCE SHAFTS – TMS AND CONNECTION INSTALLATIONS
SEW-1317	MAINTENANCE SHAFTS – TYPICAL MS COVER ARRANGEMENTS
	SPECIAL CROSSINGS / STRUCTURES ARRANAGMENTS
SEW-1400	BURIED CROSSINGS – SYPHON ARRANGEMENT
SEW-1401	BURIED CROSSINGS – RAILWAYS
SEW-1402	BURIED CROSSINGS – MAJOR ROADWAYS
SEW-1403	BURIED CROSSINGS – BORED AND JACKED ENCASING PIPE DETAILS
SEW-1404	AERIAL CROSSINGS – AQUEDUCT
SEW-1405	AERIAL CROSSINGS – AQUEDUCT PROTECTION GRILLE
SEW-1406	AERIAL CROSSINGS – BRIDGE CROSSING CONCEPTS
SEW-1407	VENTING SYSTEM – INDUCT VENT
SEW-1408	VENTING SYSTEM – EDUCT VENT
SEW-1409	WATER SEAL ARRANGEMENTS – MAINS TYPE
SEW-1410	WATER SEAL ARRANGEMENTS – MAINTENANCE HOLE SYSTEM
SEW-1411	WATER SEAL ARRANGEMENTS – TWIN MAINTENANCE HOLE SYSTEM
SEW-1412	EMERGENCY RELIEF STRUCTURES – TYPICAL ARRANGEMENT DN 150 TO DN 375
	CONNECTIONS TO EXISTING SYSTEMS
SEW-1500	INSERTION AND REPAIR SYSTEMS – CUT-IN METHODS
SEW-1501	INSERTION AND REPAIR SYSTEMS – INSERTION OF JUNCTIONS
SEW-1502	INSERTION AND REPAIR SYSTEMS – MAINTENACE STRUCTURES

* USE THIS STANDARD ONLY WITH THE PRIOR APPROVAL OF THE GENERAL MANAGER OF REDLAND WATER AND WASTE

C	AMENDED	1/04	
B	AMENDED	6/02	
A	ORIGINAL ISSUE	1/02	
	REVISIONS	DATE	APPROVED

© REDLAND SHIRE COUNCIL

DISCLAIMER. The authors shall have no liability or responsibility to the user or any other person or entity with respect to any liability, loss or damage caused or alleged to be caused, directly or indirectly, by the adoption and use of these Standard Drawings including, but not limited to, any interruption of service, loss of business or anticipatory profits, or consequential damages resulting from the use of these Standard Drawings. Persons must not rely on these Standard Drawings as the equivalent of, or a substitute for, project-specific design and assessment by an appropriately qualified professional.

Redland SHIRE COUNCIL

INDEX STANDARD DRAWINGS SEWERAGE

SEWERAGE Standard Drawing

S-RSC-1

A B C

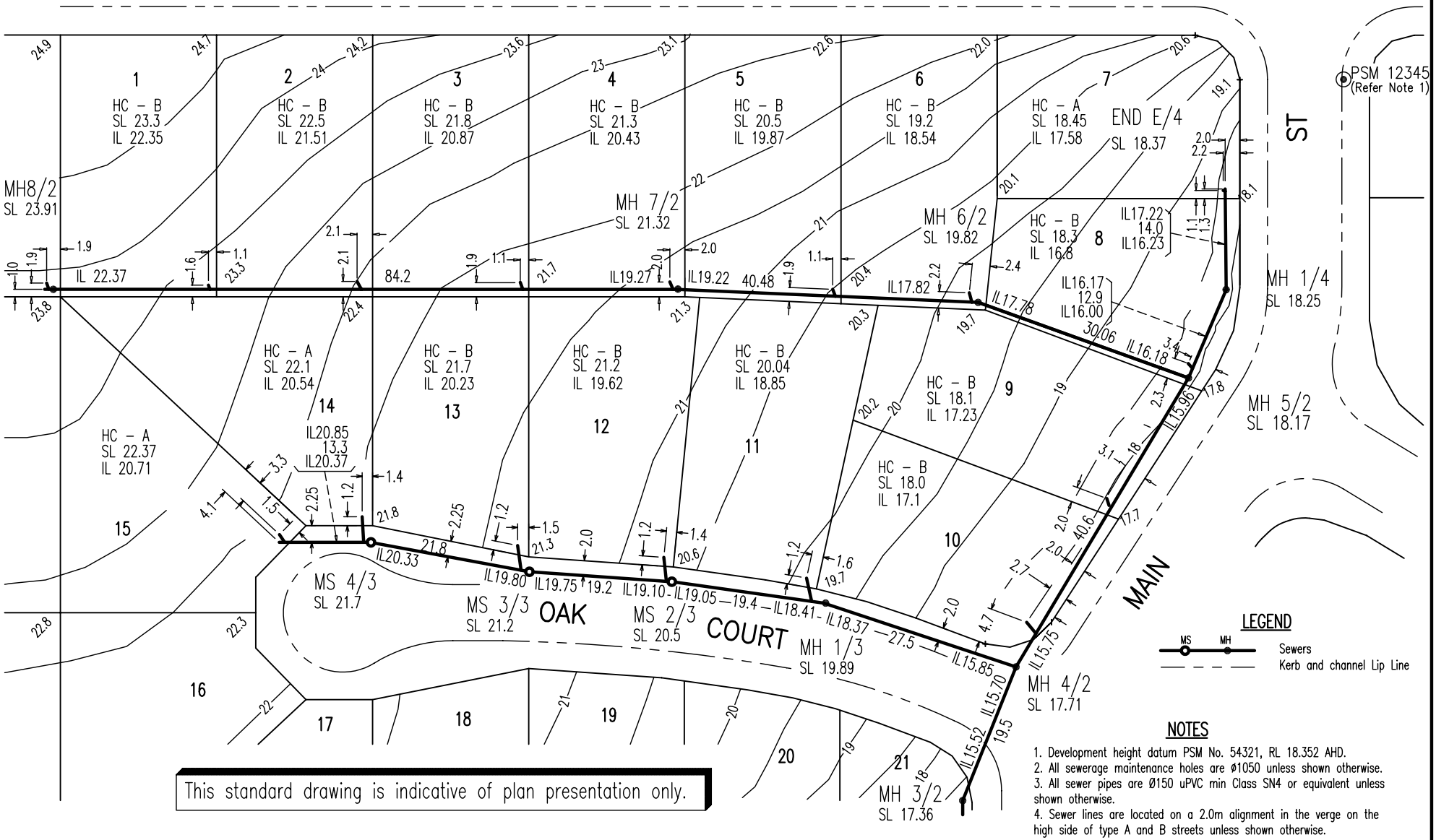

This standard drawing is indicative of plan presentation only.

NOTES

1. Development height datum PSM No. 54321, RL 18.352 AHD.
2. All sewerage maintenance holes are Ø1050 unless shown otherwise.
3. All sewer pipes are Ø150 uPVC min Class SN4 or equivalent unless shown otherwise.
4. Sewer lines are located on a 2.0m alignment in the verge on the high side of type A and B streets unless shown otherwise.

B	AMENDED	6/04	
A	ORIGINAL ISSUE	1/02	
REVISIONS		DATE	APPROVED

© REDLAND SHIRE COUNCIL

DISCLAIMER. The authors shall have no liability or responsibility to the user or any other person or entity with respect to any liability, loss or damage caused or alleged to be caused, directly or indirectly, by the adoption and use of these Standard Drawings including, but not limited to, any interruption of service, loss of business or anticipatory profits, or consequential damages resulting from the use of these Standard Drawings. Persons must not rely on these Standard Drawings as the equivalent of, or a substitute for, project-specific design and assessment by an appropriately qualified professional.

Redland SHIRE COUNCIL

SAMPLE AS CONSTRUCTED PLAN SEWERAGE RETICULATION

SEWERAGE
Standard Drawing
S–RSC–2

A B

Std. Dwg. No.	Descriptions
	Redland Shire Council Approved Standard Drawings
	Redland Shire Council Drawings
P-RSC-2	Bikepath Pavement Joints
P-RSC-3	Signs – Park Name Sign
P-RSC-4	Bikepath Slowdown Control Reverse Curve
P-RSC-5	Bikepath Slowdown Control Offset Chicane

B	ORIGINAL ISSUE	1/02	
A	ORIGINAL ISSUE	1/98	
REVISIONS		DATE	APPROVED

© REDLAND SHIRE COUNCIL

DISCLAIMER. The authors shall have no liability or responsibility to the user or any other person or entity with respect to any liability, loss or damage caused or alleged to be caused, directly or indirectly, by the adoption and use of these Standard Drawings including, but not limited to, any interruption of service, loss of business or anticipatory profits, or consequential damages resulting from the use of these Standard Drawings. Persons must not rely on these Standard Drawings as the equivalent of, or a substitute for, project-specific design and assessment by an appropriately qualified professional.

Redland SHIRE COUNCIL

INDEX

STANDARD DRAWINGS

PARKS

PARKS

Standard Drawing

P-RSC-1

A B

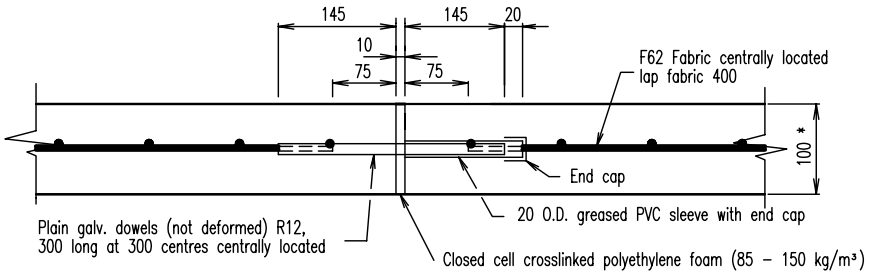

EXPANSION JOINT

Spacing 16m

* The thickness shall be 125 thick where there is likely vehicular traffic. (e.g. maintenance vehicles in parks etc.)

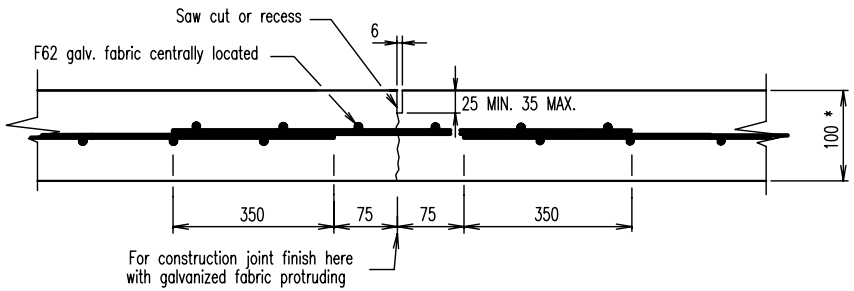

CONTRACTION JOINT

Spacing 4m

REINFORCED

NOTES:

1. Concrete N25 in accordance with AS 1379 and AS 3600.
2. Dowels Grade 250 steel to AS 1302. Fabric to AS 1304.
3. Galvanizing to AS 1650.
4. All dimensions in millimetres.

A	ORIGINAL ISSUE	1/98	
	REVISIONS	DATE	APPROVED

© REDLAND SHIRE COUNCIL

DISCLAIMER. The authors shall have no liability or responsibility to the user or any other person or entity with respect to any liability, loss or damage caused or alleged to be caused, directly or indirectly, by the adoption and use of these Standard Drawings including, but not limited to, any interruption of service, loss of business or anticipatory profits, or consequential damages resulting from the use of these Standard Drawings. Persons must not rely on these Standard Drawings as the equivalent of, or a substitute for, project-specific design and assessment by an appropriately qualified professional.

Redland SHIRE COUNCIL

BIKEPATH
PAVEMENT JOINTS

PARKS
Standard Drawing
P–RSC–2
A

NOTES

1. All Timber to be LOSP Treated Pine (Seasoned)
2. All Steelwork to be Hot Dip Galvanised
3. All Lettering to Sign Boards to be 100mm High Helvetica, Routed to max. depth 10mm and Painted in Yellow Gloss Acrylic.
4. All Timber to be Painted with Two Coats of Preservative Jarrah Stain or Intergrain Dark Cedar.
5. R.S.C. aluminium plaque (200x200) to be secured to rail using anti–theft screws and can only be removed using special tools.

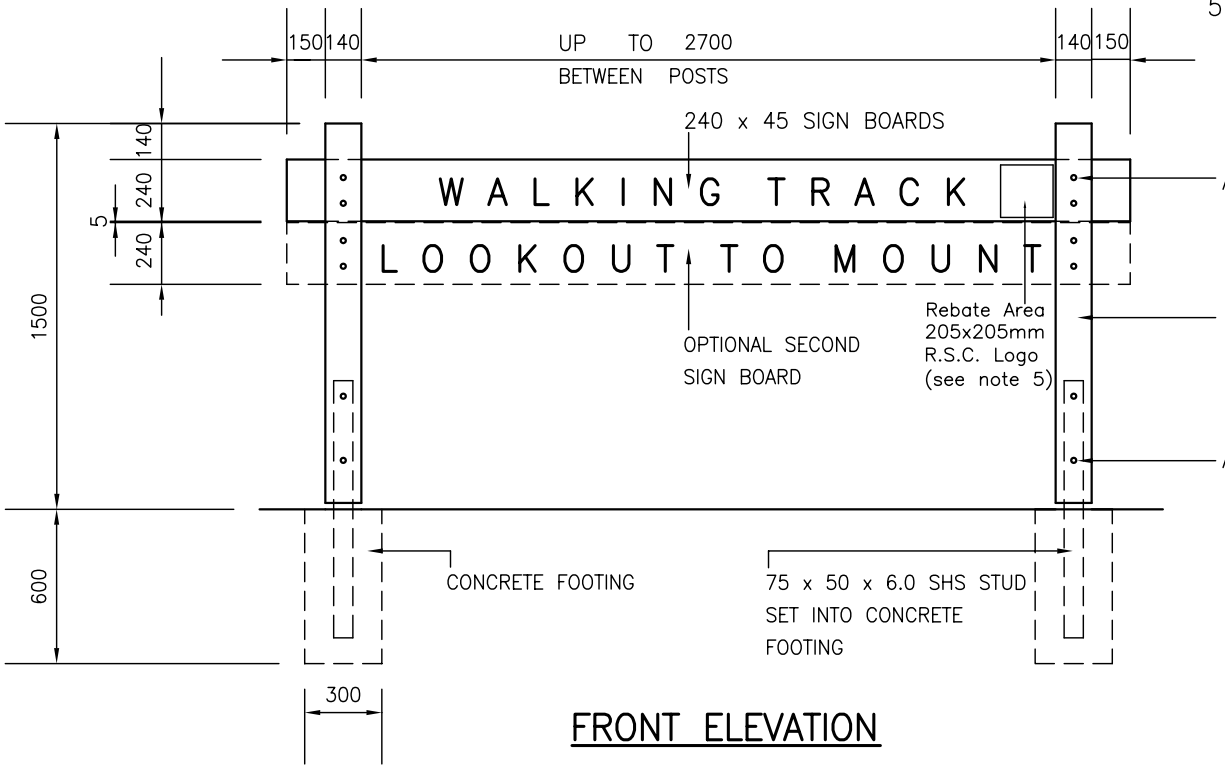

FRONT ELEVATION

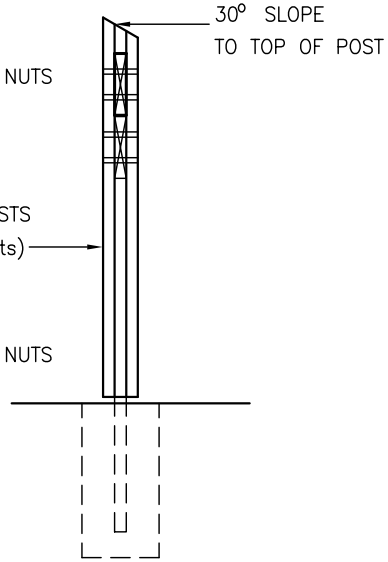

END ELEVATION

A	ORIGINAL ISSUE	1/98	
	REVISIONS	DATE	APPROVED

© REDLAND SHIRE COUNCIL

DISCLAIMER. The authors shall have no liability or responsibility to the user or any other person or entity with respect to any liability, loss or damage caused or alleged to be caused, directly or indirectly, by the adoption and use of these Standard Drawings including, but not limited to, any interruption of service, loss of business or anticipatory profits, or consequential damages resulting from the use of these Standard Drawings. Persons must not rely on these Standard Drawings as the equivalent of, or a substitute for, project–specific design and assessment by an appropriately qualified professional.

Redland SHIRE COUNCIL

SIGNS

PARK NAME SIGN

PARKS

Standard Drawing

P–RSC–3

A

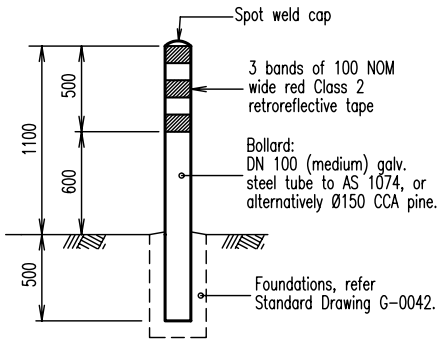

DETAIL A

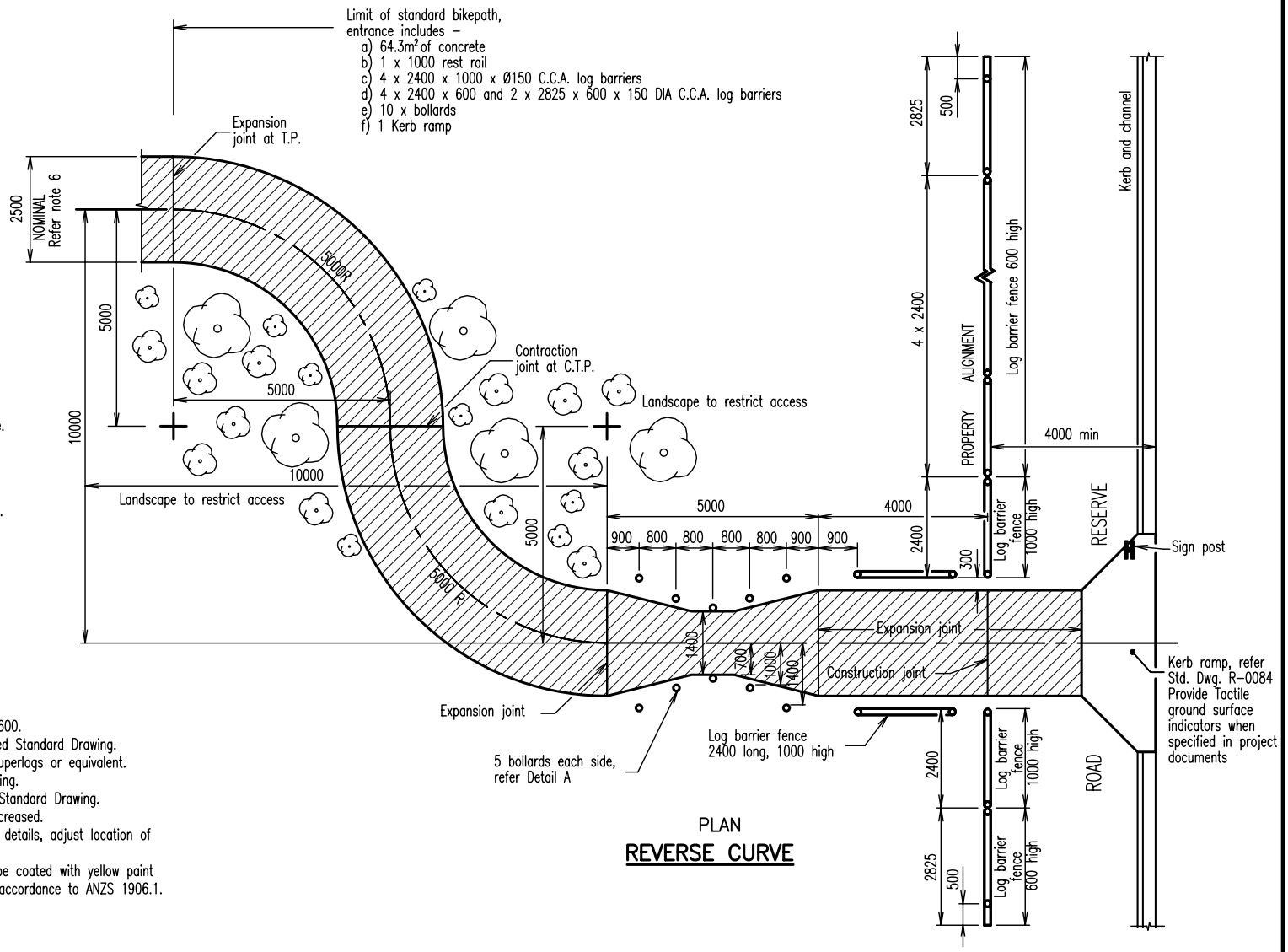

PLAN

REVERSE CURVE

NOTES

1. Concrete N25 in accordance with AS 1379 and AS 3600.
2. Concrete slab to be 100mm thick, refer RSC approved Standard Drawing.
3. C.C.A. log barrier to be 150mm diameter, Grade A superlogs or equivalent.
4. Kerb ramp details refer RSC approved Standard Drawing.
5. Rest rails, refer project drawings and RSC approved Standard Drawing.
6. The nominal 2500 bikepath width may need to be increased.
7. Refer RSC approved Standard Drawing for log barrier details, adjust location of posts and height to suit dimensions on this drawing.
8. Galvanized bollards and treated CCP pine logs shall be coated with yellow paint and 3 bands of red Retroreflective tape to be used in accordance to ANZS 1906.1.
9. Centre bollards shall not be used.
10. All dimensions in millimetres.

A	ORIGINAL ISSUE	1/02	
	REVISIONS	DATE	APPROVED

© REDLAND SHIRE COUNCIL

DISCLAIMER. The authors shall have no liability or responsibility to the user or any other person or entity with respect to any liability, loss or damage caused or alleged to be caused, directly or indirectly, by the adoption and use of these Standard Drawings including, but not limited to, any interruption of service, loss of business or anticipatory profits, or consequential damages resulting from the use of these Standard Drawings. Persons must not rely on these Standard Drawings as the equivalent of, or a substitute for, project-specific design and assessment by an appropriately qualified professional.

Redland SHIRE COUNCIL

BIKEPATH SLOWDOWN CONTROL REVERSE CURVE

PARKS

Standard Drawing

P-RSC-4

A

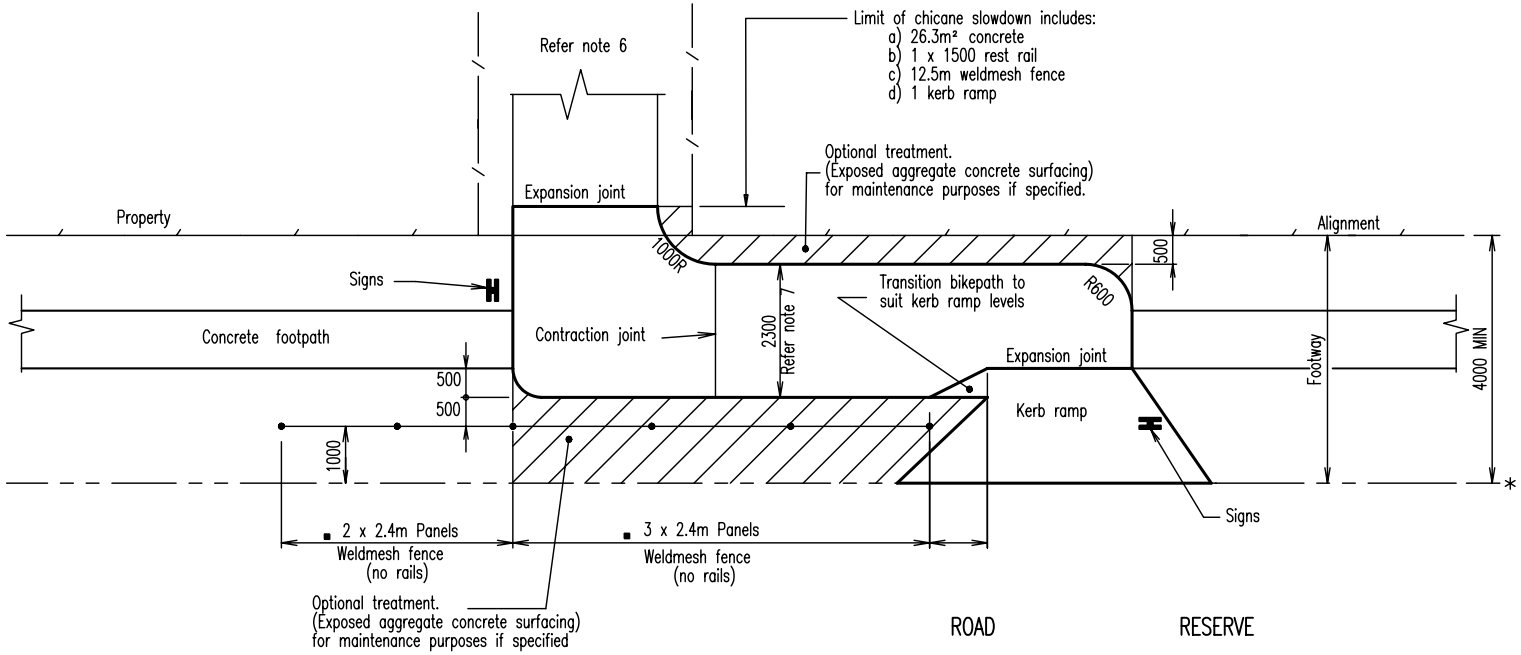

OFFSET CHICANE

- For use where reverse curve is not practical
- Recommended for areas with high primary school traffic

LEGEND

∗ Lip line

▪ Each section may be reduced by 1 panel, refer project drawings

● Unless otherwise specified

NOTES

1. Concrete N25 in accordance with AS 1379 and AS 3600.
2. Concrete slab to be 100mm thick, refer other RSC approved Standard Drawing.
3. Weldmesh fence details as per Standard Drawing G–0045.
4. Kerb ramp details as per RSC approved Standard Drawings. Provide Tactile ground surface indicators when specified in project documents.
5. The NOMINAL 2500 bikepath width may need to be increased for high use areas.
6. Bikepath width may need to be reduced to suit available footway. The preferred width is 2500; the absolute minimum width is 2000.
7. All dimensions in millimetres, unless shown otherwise.

A	ORIGINAL ISSUE	1/02	
	REVISIONS	DATE	APPROVED

© REDLAND SHIRE COUNCIL

DISCLAIMER. The authors shall have no liability or responsibility to the user or any other person or entity with respect to any liability, loss or damage caused or alleged to be caused, directly or indirectly, by the adoption and use of these Standard Drawings including, but not limited to, any interruption of service, loss of business or anticipatory profits, or consequential damages resulting from the use of these Standard Drawings. Persons must not rely on these Standard Drawings as the equivalent of, or a substitute for, project–specific design and assessment by an appropriately qualified professional.

Redland SHIRE COUNCIL

BIKEPATH SLOWDOWN CONTROL OFFSET CHICANE

PARKS
Standard Drawing
P–RSC–5
A

Planning Scheme Policy 10 - Outdoor Dining

10.1 Purpose

(1) The purpose of this policy is to support the Outdoor Dining Code in the assessment of outdoor dining on public land.

(2) To operate outdoor dining on public land, new and existing operators will be required to apply for and be granted a permit under local government's *Local Law and Subordinate Local Law No.20 – Commercial Use of Roads*.

(3) In addition to meeting the design elements outlined in the Outdoor Dining Code, operators will be required to take out and maintain public liability insurance of $10,000,000.

10.2 Context

Outdoor dining areas can contribute to the visual appeal and atmosphere of both public and private spaces within centres. Materials associated with outdoor dining can also enhance the colour and vitality of the areas in which they are located. To ensure outdoor dining makes a positive contribution without interfering with pedestrian movement, adjoining business interests and public safety, a certain degree of guidance is required in terms of location, design and operation of the use.

10.3 Policy and Standards Compliance

(1) All approved development application works undertaken for the purposes of outdoor dining are to conform with the requirements of the Outdoor Dining Code as well as, but not limited to –

(a) relevant Redland City Council Policy Procedures;
(b) relevant Redland City Council Guidelines;
(c) relevant Redland City Local Laws and Subordinate Local Laws;
(d) relevant Australian Standards;
(e) *Food Act 1981-1984* and the *Food Hygiene Regulation 1989*;
(f) Liquor Licensing requirements, if intending to serve liquor;
(g) the *Building Code of Australia*;
(h) *AUSTROADS*;
(i) other relevant design and construction standards.

10.4 Issuing of Permits

(1) A permit is required to operate outdoor dining on public land within the planning scheme area.

(2) To obtain a permit the applicant is required to demonstrate that the proposed outdoor dining area complies with the Outdoor Dining Code.

(3) For applications to be assessed and determined in a timely and effective manner, applicants are required to submit the information outlined in this policy. Failure to submit the listed information or incomplete information may result in time delays associated with processing applications.

(4) An application fee is charged for the assessment of an outdoor dining permit. Permits are required to be renewed annually unless a shorter period is specifically conditioned by the local government on the permit.

(5) A charge, adopted annually by the local government, is also required where proposing to use public land for outdoor dining. The revenue collected will assist in paying some of the costs of maintaining and enhancing public streetscape spaces in centres. In return, operators are essentially increasing their useable gross floor area (GFA) associated with their commercial operations.

(6) The annual charge is calculated on the basis of the area of public space being used for outdoor dining. Please refer to the local government's fees and charges for the applicable application fee and annual charge.

(7) Existing operators who have an existing approval will be granted a new approval in consultation with the local government.

10.5 How to Apply

(1) The local government is responsible for all aspects of assessing an outdoor dining permit, including the coordination of each stage of the application process, assessment of applications, issuing of permits and compliance with permit conditions.

(2) An application for outdoor dining is required to be associated with a business that operates an existing food premises.

(3) Applications for extension of a liquor license are made separately to the Liquor Licensing Division, Queensland.

10.5.1 Information required to be submitted when applying for an outdoor dining permit –

(1) Outdoor Dining Permit Application – An applicant is required to complete and submit a permit application in accordance with the provisions of *Local Law and Subordinate Local Law No.20 – Commercial Use of Roads*.

(2) Application Fee(s) – The fee as adopted by the local government is to be submitted with the development application and/or outdoor dining permit forms.

(3) Site Analysis Plan –

(a) the applicant is required to demonstrate an appreciation of the site, its context, and opportunities and constraints for the layout design of the site. The site opportunities and constraints should set the basis from which the outdoor dining design and layout is derived. This plan should be drawn to scale;

(b) the site analysis plan shall indicate –

(i) site dimensions –
- a. footpath width from outside face of kerb to the building line;
- b. location of building lines;
- c. width of the building frontage to which the outdoor dining area is associated;
- d. entry points to the building;

(ii) site features –
- a. existing trees and street furniture including bench seating, street lighting, bins, drinking fountains, bicycle racks, or planter boxes;
- b. existing awnings, overhangs and signage;

(iii) topography and services –
- a. footpath levels and cross falls;
- b. easements and existing services, including poles, service pits, stormwater catchment pits in kerb, fire hydrants, post boxes, public telephones, connection points;
- c. existing vehicle access points;

(iv) adjoining features and constraints –
- a. types of businesses on abutting properties and their building lines;
- b. type (such as parallel, diagonal, or rear in) and dimensions of any carparking provided on the road shoulder adjoining the footpath on which any outdoor dining area is to be located;
- c. existing pedestrian movement corridors through the site;
- d. any uses which may be sensitive to outdoor dining located in close proximity, such as automatic teller machines.

(4) Photograph(s) of the site – Photographs must clearly show the site of the proposed outdoor dining area, its footpath features and its proximity relative to adjoining buildings and streetscape elements.

(5) Site plan of the proposed outdoor dining area – A site plan at scale 1:100 should accurately show the area of the proposed outdoor dining area as well as the location and orientation of all proposed screens, overhangs, bollards, signage, tables, chairs, umbrellas and other street furniture. All elements shown on the plan are to be reflective of actual dimensional size.

(6) Photographs and details of furniture – Photographs and/or detailed architectural drawings of chairs, tables, screens, bollards, umbrellas and other furniture proposed for the outdoor dining area, including cooking devices, heating and cooling devices and lighting. Any logo signage to be used should be clearly detailed to scale.

(7) Insurance Requirements – A permit holder must take out and maintain public liability insurance for the outdoor dining area to the satisfaction of the local government. This requirement will be satisfied if the permit holder provides evidence to that they have taken out public liability insurance –

(a) in the name(s) of the permit holder;
(b) for the amount of $10,000,000 in respect of any single occurrence;
(c) that indemnifies the local government against all claims of any kind arising from any negligent act or actions by the permit holder or the permit holder's agents;
(d) provide a "Certificate of Insurance" from a licensed insurer or broker on an annual basis.

(8) Other information – In certain instances the local government may request information on additional matters. Such requirements would normally be identified at a pre-lodgement discussion with local government officers or through the information request period for a development application.

(9) Streetscape Design Guidelines –

(a) the application must demonstrate the ability of the proposal to satisfy the design requirements of streetscape manuals which pertain to the subject location;
(b) streetscape design guidelines exist for Cleveland, Capalaba and Point Lookout;
(c) please confirm with local government's Development Assessment Team by contacting 3829 8654 or 3829 8470 to ask whether or not the proposed location for outdoor dining needs to satisfy the requirements of a streetscape design manual.

10.6 Additional Approvals

(1) Liquor is not to be sold or supplied from a premises for consumption within an outdoor dining area unless a liquor licence has been obtained from the Liquor Licensing Division.

(2) It should be noted that the Liquor Licensing Division consults with the local government when making its decision to issue a liquor licence for a premises. In addition to considering the appropriateness of the premises for a liquor licence, the likelihood of any detrimental effect on the surrounding amenity attributed to noise, potential conflict with surrounding land uses, or potential behavioural impacts are also taken into consideration.

(3) The use of the subject premises for outdoor dining must be licensed and operated in accordance with the provisions of the *Food Act 1981-84* and the *Food Hygiene Regulations 1989*.

(4) Additional approvals may be required from the local government and/or State Government agencies if building works or operational works such as alterations to the footpath or the fixing of structures to the footpath pavement are desired for the outdoor dining activity.

(5) For instance, where fixed structures are to be erected on a road, which includes the public footpath, within an outdoor dining area, then a lease, licence or permit will be required to be issued by the Department of Natural Resources, Mines and Energy (NRM&E). In these instances the NRM&E will investigate the appropriateness of the issue of tenure after consultation with other

interested parties. It should be noted that separate application fees are payable to NRM&E should this process be necessary.

(6) NRM&E involvement is not required where no new fixed structures are required and all furniture and associated items used within the outdoor dining area are removed daily. This extends to items, which are screwed into surface templates inserted into the footpath. However, these items are to be unscrewed and removed from the footpath daily and the surface templates are to finish flush with level of the pavement to prevent a safety hazard.

(7) A road opening permit may be required from the local government for any works contained within the footpath or road reserve, and a separate application and fee will be applicable.

10.7 Maintenance and Operation

(1) The outdoor dining area shall only operate during the approved business hours of the subject food premises. All removable outdoor dining furniture, shade structures and other associated items should be removed from the footpath and stored in the premises outside trading hours.

(2) The footpath area is to be kept clean at all times at the expense of the permit holder in addition to local government cleaning operations. Appropriate refuse receptacles are to be provided for use by patrons, which are cleaned and emptied by the permit holder. Local government footpath receptacles are not to be used in association with an outdoor dining area for disposing of food wastes and the like. No liquid wastes are to be discharged onto the footpath or street drainage system. Outdoor dining areas shall also be equipped with a cigarette refuse receptacle and all planters must have drip trays.

(3) The permit holder is responsible for bearing the costs of any damage to the footpath, public utilities or existing infrastructure, which in the opinion of the local government has been caused by the outdoor dining activity.

(4) The location of outdoor dining furniture and associated items are to remain in accordance with approved plans and cannot be altered. All outdoor dining furniture (including plantings) must be maintained to a sound condition and be kept clean and presentable at all times. Furniture design should accord with the provisions of the Outdoor Dining Code.

(5) All outdoor dining furniture, including advertising and logo signage, to be used within a proposed outdoor dining area needs to be approved by the local government.

(6) Signage used in association with an outdoor dining area is to adhere to the provisions of the Advertising Devices Code.

(7) Outdoor dining furniture and associated items are to add visual interest to the streetscape though the use of compatible colours and materials – refer to Outdoor Dining Code. Logo signage should be discrete so as not to dominate the outdoor dining furniture or item on which it is displayed. Discrete logo signage on chairs, tables and planter boxes may be appropriate as an alternative to umbrellas and other shade devices. All logo signage to be used needs to be clearly detailed to scale as part of the application process and needs to be approved by the local government.

10.8 Enforcement

(1) The following enforcement procedures as detailed in *Local Law No.20 – Commercial Use of Roads* will be adopted by the local government should a permit holder/operator of an outdoor dining area on public land –

(a) breach the permit conditions and/or operate an outdoor dining area with an expired permit; or
(b) operate a new outdoor dining area without a permit being issued; or
(c) continually breach the permit conditions relating to the operation of the outdoor dining area.

(2) The basic enforcement procedures adopted by the local government include –

(a) issue of a verbal warning. Details are documented in the relevant file and/or action request;
(b) failing compliance with the verbal warning, a written "Notice to Comply" will be issued requiring the person to stop the contravention either by –
  (i) taking specified action within a specified time to remedy the contravention; or
  (ii) undertaking immediate action to remedy a contravention if it is necessary to avoid risks to public safety.

(3) Failing compliance with the "Notice to Comply", an "Infringement Notice" will be issued in accordance with *Local Law & Subordinate Local Law No.20 – Commercial Use of Roads*.

(4) Outdoor dining on private land is to comply with the conditions of a development permit. Enforcement of these conditions will follow the process outlined in the *Integrated Planning Act 1997.*

(5) Outdoor dining permits will be issued for a maximum period of 12 months or such shorter period as specifically prescribed in the permit.

(6) Upon expiry of a permit the operator will need to reapply to the local government for renewal of the permit.

10.9 Furniture Design Guide - Chairs (Indicative Examples Only)

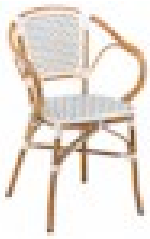

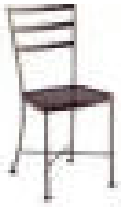

Outdoor Dining

10.10 Furniture Design Guide - Planter Boxes (Indicative Examples Only)

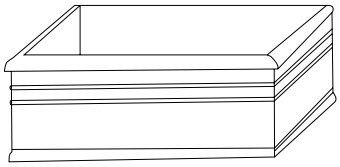

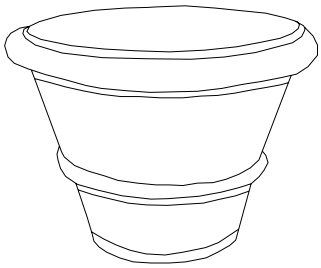

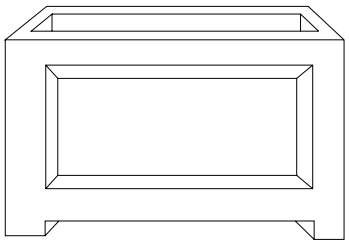

Note -

- All planters must have drip trays

10.11 Furniture Design Guide - Tables (Indicative Examples Only)

Outdoor Dining

10.12 Furniture Design Guide - Shade Devices (Indicative Examples Only)

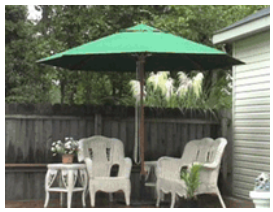

Outdoor Dining

this page purposely
left blank

Planning Scheme Policy 11 - Rural Lands and Uses

11.1 Purpose

The purpose of this policy is to set out the requirements for the preparation and submission of technical reports associated with development applications for rural type uses under the Redlands Planning Scheme.

11.2 Applicabilit y

This policy applies to all rural use development applications under the Redlands Planning Scheme.

11.3 Context

The City's rural areas have traditionally played a role in the diverse growth and development of Redland City, accommodating a range of rural and semi-rural activities. Rural areas are important economic generators and contribute to the primary and resource based industries of the City. These areas also play an important landscape and scenic amenity role, providing a contrast to urban areas, as well as permitting a range of rural lifestyle opportunities.

11.4 General Requirements

(1) Applications should provide information and an assessment regarding -

(a) planning and site selection;
(b) legislative requirements;
(c) building design, location and construction;
(d) noise, dust and odour generation and potential impacts both on-site and off-site, with particular regard to existing or likely future residents or other sensitive receptors in the area;
(e) likely impacts on water and soil contamination, erosion and salt accumulation, stormwater run-off and wastewater disposal;
(f) likely visual impacts, with particular regard to the existing and proposed character of the area;
(g) access, traffic generation and the adequacy and likely impact on the road network in the area;
(h) the disposal and management of wastes, including liquids and solids, produced by the proposed development;
(i) the identification and management of impacts associated with the development during both its construction and operational phases.

11.5 Agriculture and Intensive Agriculture

11.5.1 Land Capability

(1) Intensive agriculture uses are generally considered not appropriate on land covered by *State Planning Policy 1/92 - Development and the Conservation of Agricultural Land.*

(2) In any evaluation procedure, climate, terrain and soil are the primary determinants of a site's potential.

(3) The requirements for agricultural activities are as follows -

(a) the chemical nutrients removed by crops are replenished in the soil;
(b) the physical condition of the soil suited to the land utilisation type is maintained which usually means increasing, or at least maintaining, soil organic matter levels;
(c) there is no increase of soil acidity, or of toxic elements;
(d) soil erosion is controlled;
(e) there is no build up of weeds, pests and diseases.

(4) Types of limitations for agricultural uses include -

(a) factors limiting choice of crops or crop productivity -
(i) climate;
(ii) soil depth;

(b) factors limiting the use of agricultural machinery -
(i) topography;
(ii) soil workability;

(c) factors controlling land deterioration -
(i) water erosion;
(ii) flooding;
(iii) wind erosion.

11.5.2 Property Management Plan

(1) A Property Management Plan is required for the following uses -

(a) agriculture;
(b) forestry;
(c) intensive agriculture.

(2) The Property Management Plan contains -

(a) the area to be used for agricultural production;
(b) specialised machinery to be used;
(c) road access to and within the site;
(d) the location of any proposed dwelling;
(e) the economic impact and benefits of the proposal;
(f) annual water demand for the proposed operations and alternative sources of supply;
(g) the irrigation system and how any impact on waterways and groundwaters will be managed;
(h) drainage works to contain run-off that is likely to result in the contamination of surface or groundwaters;
(i) the impact of localised flooding;
(j) the location of groundwater, dam, river, creek or other water source;
(k) the potential impact of the use on groundwater levels and water quality, and methods to mitigate these impacts;
(l) details of potential odours and noise;
(m) possible exclusion zones around chemical or inflammable liquid storage;
(n) safety measures for spill contaminant and backup provisions;
(o) the quantity, use and management of chemicals and fertilisers;
(p) a property recovery plan and weed control;
(q) the source and adequacy of water to be used on site, including arrangements for water storage;
(r) the use or potential alienation of Good Quality Agricultural Land;
(s) the ability of the site to ecologically sustain the scale and nature of the uses or works being proposed;
(t) feed storage facilities;
(u) animal numbers and proposed methods and densities of enclosure;
(v) animal carcass disposal;
(w) pest, weed and predator control.

11.5.3 Guidelines

(1) Agriculture and Intensive Agriculture is carried out in accordance with any applicable Environmental Code of Practice prepared under s.548 of the *Environmental Protection Act 1994* or State Government endorsed policy.

(2) Current Codes of Practice and Policies include -

(a) *The Environmental Code of Practice for Agriculture* (QFF, 1998);
(b) *Sustainable Sugar Cane Growing in Queensland* (Canegrowers, 1998);

(c) *Sustainable Fruit and Vegetable Production in Queensland* (QFVG, 1998);
(d) *Queensland Dairy Farming Code of Practice* (DPI, 2000);
(e) *Environmental Code of Practice for Queensland Piggeries* (DPI, 2000);
(f) *Draft Policy on Sustainable Land-Based Aquaculture Industry Development*.

11.5.4 Vegetated Buffer Design

(1) Separation widths are recommended to minimise the potential of conflicting land uses.

(2) 'Vegetated buffers' can offer an alternative to this separation requirement. Vegetated buffers have advantages in that they -

(a) create habitat and corridors for wildlife;
(b) increase the biological diversity of an area, thus assisting in pest control;
(c) favourably influence the microclimate;
(d) are aesthetically pleasing;
(e) provide opportunities for recreational uses;
(f) contribute to the reduction of noise, odour and dust impacts.

(3) Research into pesticide spray drift has shown that vegetation buffers can prove effective barriers to spray drift where they meet the following criteria -

(a) includes a suitable watering system;
(b) have a minimum total width of 40 metres;
(c) contains random plantings of a variety of tree and shrub species of differing growth habits, at spacings of 4-5 metres for a minimum width of 20 metres;
(d) includes species with long, thin and rough foliage which facilitate the more efficient capture of spray droplets;
(e) provides a permeable barrier which allows air to pass through the buffer. A porosity of 0.5 is acceptable, where approximately 50 percent of the screen is air space;
(f) foliage is from the base to the crown;
(g) includes species which are fast growing and hardy;
(h) have a mature tree height 1.5 times the spray release height or target vegetation height, whichever is higher;
(i) have mature height and width dimensions which do not detrimentally impact upon adjacent cropped land;
(j) includes an area of at least 10 metres clear of vegetation or other flammable material to either side of the vegetated area.

(4) Applications for development, where vegetated buffers are proposed, require -

(a) a landscape plan indicating -
  (i) the extent of the buffer;
  (ii) the location and spacing of proposed and existing trees and shrubs;
  (iii) a list of tree and shrub species to be planted;

(b) details concerning means by which the buffer is to be maintained.

(5) Information on appropriate vegetation species is available in the publication *Trees and Shrubs* (DPI, 1991) or from NRM&E forestry extension officers.

(6) Other matters such as topography and direction of prevailing breezes should be considered when determining appropriate separation distances for development.

Note -

Vegetated buffer design criteria are based on research by the Centre of Pesticide Application and Safety, University of Queensland, Gatton College.

11.5.5 Minimising Land Use Conflict

(1) Land use strategies should, as far as practicable, aim to isolate agricultural uses likely to conflict with certain uses.

(2) Farm forestry and grazing are examples of rural land uses that are compatible with either adjoining areas of intensive agriculture or adjacent residential uses.

(3) In buffer areas between farmland and urban development, the aim is to limit development to uses that do not detract from the effective operation of the buffer area. Such uses should therefore be compatible with the adjoining agricultural areas and adjacent residential development.

(4) Examples of compatible uses, depending on the agricultural uses, include farm forestry, plant nurseries, horse trails, walking/cycling tracks, sport fields or other recreational activities.

(5) If the buffer area is created primarily to reduce conflict from agricultural chemical spray drift, some of these uses may not be compatible. In certain cases of land use conflict, it may be appropriate that minor loss of amenity is tolerated if the intrusion occurs on an infrequent basis without associated health risks.

11.6 Fauna Friendly Fencing

(1) Fences are one of the major obstacles to fauna movement. Fences erected across habitat areas and corridors create physical barriers to fauna movement and have the potential to disrupt the feeding, migration, breeding and social patterns of fauna within that area. Due to this, fencing erected in some areas is required to be 'fauna friendly'.

(2) A Fauna Friendly Fence is a fence that does not inhibit the movement of native fauna between properties. No single fence design can be classed as Fauna Friendly. Given the vast variety in animal size, shape and methods of mobility, a Fauna Friendly Fence needs to be defined relative to the area's particular fauna. Also, a fence that is friendly to one species is not necessarily friendly to all. As such, a koala friendly fence is not always a Fauna Friendly Fence.

(3) In the Redlands, if a kangaroo, koala or bandicoot can easily negotiate a fence then the fence would not be a barrier to most other native fauna. Such a fence would be considered to be Fauna Friendly.

(4) When choosing fencing materials, the environment in which it will be situated should be considered. The character of an area, whether it is of a rural, bush land or park nature, attracts residents to live within its boundaries and as such should be taken into account when designing fences.

(5) Wood, brick, metals and wire can be combined in a variety of designs to create an effective and unique fence while maintaining the character of the area. Barbed wire and electric fences of any description are definitely NOT fauna friendly!

Note -

Refer to Part 11 - Planning Scheme Policy 4 - Ecological Impacts for specific fauna friendly fencing criteria.

11.7 A Fence For All Purposes

(1) Property boundary definition, security, privacy and the containment of livestock can all be achieved while meeting the Fauna Friendly Fencing objectives.

(2) Property Definition -

(a) a constructed fence may not be necessary to define a property boundary. Consideration should be given to garden edges or low wooden posts to subtly define boundaries exposed to the public; or
(b) where this is not possible, a rural style fence of plain wire strands and wooden posts allows for the uninhibited movement of native fauna while defining boundaries.

(3) Privacy -

(a) the privacy of a property can be enhanced through the use of vegetation. A combination of native trees, shrubs and ground covers can effectively screen areas while enhancing the amenity and habitat value of the area;
(b) if the alignment of the property were such that privacy is a great concern, a more solid fence that meets Fauna Friendly Fencing criteria may be considered.

(4) Dogs -

(a) the presence of a dog does not deter native fauna from entering a property. To assist dogs and native fauna to live in harmony, dogs should be confined to an area in the immediate vicinity of the house. A fence erected around the house provides room for dogs to move, retains the dog near the house for added safety and security, and allows fauna to move freely through the remainder of the property;
(b) "Fauna proof" fencing should be used to separate dogs from other wildlife. The safest fauna proof fence is a solid, vertical, six-foot high fence, free of overhanging vegetation. Most fencing other than this would allow some fauna movement. Fencing made of products similar to chain wire can allow small animals to move through and can be climbed by koalas. Owners should be aware of this and be watchful of dogs when fauna is known to be on the property.

(5) Existing fences -

(a) the movement of animals through existing fences can be improved by planting a variety of native trees and shrubs along the fence line which fauna can use to climb over the fence until such time that a Fauna Friendly Fence can be erected;
(b) sections of the fencing could also be removed and replanted to integrate the fence and vegetation.

(6) Before constructing a fence first decide if it is needed. If so, make it fauna friendly. By choosing designs and materials carefully, fences can be created that are functional, individual and most importantly, fauna friendly.

(7) Redland City Council is dedicated to the protection of the City's fauna.

11.8 Forestr y

(1) The local government does not support native forestry developments within the planning scheme area due to such developments being highly unlikely to achieve protection, enhancement and maintenance of environmental values. The term native forestry includes the silviculture, management, and selective harvesting of trees from a native forest.

(2) Native forestry will lead to negative impacts on environmental values including -

(a) loss of habitat and habitat values;
(b) loss of indigenous vegetation;
(c) loss of ecological niche;
(d) disturbance of indigenous ecosystems;
(e) loss of nesting hollows;
(f) loss of trees that would be regarded as remnant vegetation;
(g) alteration of floristic diversity;
(h) impacts on indigenous animals and their behaviour.

(3) All forestry uses require a Private Forestry Management Plan to be prepared and submitted that details -

(a) the location, extent and species to be established as part of the use;
(b) the locations of all fire breaks, access tracks and watering points, and access points for fire fighting vehicles;

(c) an active monitoring program for the identification and removal of 'self-propagated' seedlings from outside the plantation area;
(d) management practices to be undertaken to ensure that maintenance and management activities on land containing slopes less than 1 in 3 do not impact on local environmental values.

(4) Alterations to forestry operations that may warrant re-submission to the local government include -

(a) changes to the type of operation, such as changing from selectively harvested and/or native species plantations to monocultures and/or clearfell operations; or
(b) changes in the scale of the operation - greater than 10 percent change in area of plantation; or
(c) changes in the species being used if changing from native plants to exotic.

(5) Current codes of practice and references -

(a) *Forest Harvesting Industry Code of Practice*, Department of Employment, Training and Industrial Relations, 2000, Brisbane.
(b) *Planning guidelines: Separating Agricultural and Residential Land Uses*, Department of Natural Resources, Mines and Energy, 1997, Brisbane.
(c) *Private Forestry Model Planning Framework*, Local Government Association of Queensland Inc, 2002.

Planning Scheme Policy 12 - Social and Economic Impact Assessment

12.1 Purpose

(1) Social and Economic Impact Assessment is a process of investigating the possible effects of a development proposal or project on one or all of the following -

(a) people's way of life - how they live, work, play and interact with one another on a day to day basis;
(b) the culture of the affected community - its shared beliefs, customs and values;
(c) the nature of the affected community - its cohesion, stability, character, services and facilities;
(d) the business function of the affected community.

(2) The purpose of the Social and Economic Impact Assessment is to -

(a) assist in establishing full facts about the development to support a well informed decision about the appropriateness of the development proposal;
(b) minimise adverse impacts and maximise beneficial impacts of the development;
(c) inform the community and facilitate participation by the community in the planning and development assessment process;
(d) facilitate the consideration of alternative development proposals;
(e) determine the need for such a proposal;
(f) enhance existing data to inform the planning and development assessment process.

(3) In preparing a Social and/or Economic Impact Assessment report, community consultation may also be requested. Planning Scheme Policy 2 - Community Consultation recommends how this consultation is to be undertaken.

(4) To enhance the smooth and efficient assessment of development proposals, applicants are encouraged to provide additional information up front as part of their development application in the form of a Social and/or Economic Impact Report and Social Impact Management Plan, if necessary.

(5) This policy has two parts -

(a) Social Impact Assessment;
(b) Economic Impact Assessment.

The local government may request either or both of these assessments dependent on the proposal.

12.2 Applicability of Social Assessment Policy

(1) Additional information, in the form of a Social Impact Assessment Report will be requested by the assessment manager and/or a referral agency to assist in assessing proposals that have the potential for significant community impacts.

(2) In determining whether a Social Impact Report will be requested, consideration will be given to -

(a) the scale, complexity, time frame and nature of the proposal;
(b) issues likely to be relevant to the proposal;
(c) the degree of significance of the identified issues, such as the number of people or size of the area likely to be affected;
(d) the communities likely to be affected by the proposal.

(3) Following is a list of circumstances where a Social Impact Assessment request could be made -

(a) when the development is not clearly envisaged or where there is some doubt as to whether the development is clearly envisaged by the planning scheme;

(b) when a development is likely to significantly alter the need for community facilities and/or services;
(c) when a development is likely to result in an unanticipated significant change to the existing character and identity of a community;
(d) when a development is likely to result in a significant change in population characteristics of the area affected by the development;
(e) when a development is likely to have a high level of controversy or political sensitivity;
(f) where the preparation of a structure plan, concept plan, master plan or plan of development is considered necessary by the local government or is required by the planning scheme in view of the scale, intensity or complexity of the development project;
(g) where a development is likely to impact on the health or safety of an area;
(h) where a development will result in reduced accessibility;
(i) development that may impact on particular target groups including indigenous people, children, aged people, people with disabilities and non-English speaking people;
(j) development resulting in a change in the hours or pattern of activity, psychological amenity or other factors associated with a use that may impact on the amenity of an area;
(k) development resulting in an imbalance of an activity or particular population group in an area, such as a licensed premises or aged housing;
(l) any other circumstances where the local government considers that a Social Impact Assessment is appropriate before a development can be adequately considered, or where there is likely to be significant community concern.

(4) Uses where additional information may be requested -

(a) major new housing estates such as urban expansion, infill or renewal sites that may result in significant changes to existing character and population, the development of large self-contained new communities, or developments that will significantly impact on the demand for community services and facilities infrastructure;
(b) the establishment of new, or significant alterations to existing, major institutions and public venues, including educational, health, defence, sporting and multi-purpose venues;
(c) the establishment of new centres, retail or commercial premises in out-of-centre locations, health care centres or significant alteration to existing centres;
(d) when a development involves public works associated with the development of the movement system where the works are likely to impact on neighbourhood accessibility, character and amenity;
(e) development of indoor and outdoor recreation facilities, such as amusement parks theme parks or sporting facilities;
(f) specialist housing, including aged persons housing, emergency housing and hostels;
(g) uses adjoining a community services facility;
(h) child care facility;
(i) establishment of educational facilities, community facilities including libraries and recreational facilities;
(j) industrial development that may impact on amenity or health such as through the generation of traffic, environmental emissions or safety issues;
(k) licensed premises such as hotel “General Licence” as defined under the *Liquor Act 1992*;
(l) places for youth activities;
(m) place of worship;
(n) tourist uses such as a tourist park or tourist accommodation.

12.3 Social Impact Report

(1) The Social Impact Report is intended to provide detailed information about the proposal, the potential community impacts, and the measures proposed to avoid or minimise adverse impacts. The report consists of two parts -

(a) the main text of the document that is written in a clear and concise manner that is readily understood by general readers;
(b) the appendices that contain detailed technical information.

Note -

The information requested by the assessment manager and/or referral agencies to be included in the Social Impact Report will vary for each individual development proposal. Applicants are encouraged to consult with the local government and/or the Department of Local Government and Planning prior to lodgement of an application likely to require a Social and/or Economic Impact Report for confirmation of the range of details to be included and issues to be addressed by the report.

(2) In determining the level of detail that should be included in the Social Impact Report, consideration is given to -

(a) how important the issues appear to be to the affected community;
(b) the likelihood of there being serious social consequences or potential future conflict if the matters are not addressed;
(c) the likelihood of the issues being impacted on by the proposed development;
(d) the examination of issues that are practical and achievable;
(e) how reasonable and appropriate the issues are to the development.

(3) This policy demonstrates the issues and degree of detail needed in a Social Impact Report. However, it should not be misconstrued that all these details will be requested for every application requiring a Social Impact Report. The matters to be addressed by the proponent will generally be selected from the following generic guidelines and tailored to the individual application's type and complexity.

(4) The report could include the following contents -

(a) Report Preparation;
(b) Summary and Conclusions;
(c) Scoping Potential Community Impacts;
(d) Document Existing Conditions;
(e) Predicting Community Impacts;
(f) Assessing Likely Impacts;
(g) Mitigating, Enhancing, Managing and Monitoring.

12.3.1 Report Preparation

Details of the educational qualifications and experience of the person preparing the Social Impact Report, including a list of Social Impact Reports they have completed.

12.3.2 Summary and Conclusions

(1) The summary is easily read but at the same time conveys a thorough understanding of the project and its community implications. The information may conveniently be arranged under the following headings -

(a) Site location - give a brief description of the site and surrounding areas including the location of associated infrastructure development and figures/maps of all locations;

(b) Project description - summarise the objectives of the project, proposals for the construction and operation of the project, and associated infrastructure developments;

(c) Alternatives to proposed development - summarise the features of alternatives investigated, and detail the reasons for choosing the preferred option;

(d) The existing social environment - summarise the features of the existing community relating to the proposed development and associated infrastructure;

(e) The predicted community impacts - summarise the range and level of potential impacts of the project, including cumulative impacts, both beneficial and detrimental, and any alternatives, on the existing or future community;

(f) The communities likely to be affected - outline the existing and future communities likely to be affected by the immediate and long term impacts of the project in a local, City-wide and/or regional context;

(g) The response proposed to deal with the predicted impacts - summarise the strategies and amendments proposed to minimise any adverse impacts and maximise the community benefit of the proposal, and the safeguards and management procedures proposed to minimise ongoing and/or future impacts on the community;

(h) The affected community's perspective of the proposed responses - summarise the process of gaining the community's perspective on these responses, their feedback and how this feedback has been considered;

(i) Documentation of the methods and rationale for the conclusions reached - summarise the process of determining the study recommendations;

(j) The measures taken to advise affected communities of the Social Impact Assessment results - summarise the consultation program utilised;

(k) Conclusions - summarise the key strategies and amendments to the proposal to address any adverse community impacts.

12.3.3 Scoping Potential Community Impacts

(1) The first step in Social Impact Assessment is to identify the scope of the assessment needed. This is done by consulting with key stakeholders in the community including minority and majority stakeholders to -

(a) identify issues likely to be relevant to the proposal;
(b) identify the communities likely to be affected by the proposal, including existing communities, adjacent communities, communities of interest, service providers, new communities, employees and visitors;
(c) determine the degree of significance of the identified issues, including the perspective of the affected communities.

(2) Ensure that this process is accessible to the full range of interest groups likely to be affected and take into account the needs of future generations who may be impacted on by the development.

(3) The extent of consultation required in scoping the assessment will be influenced by the significance of impacts anticipated if the development were to proceed.

12.3.4 Document Existing Conditions

(1) The second step in Social Impact Assessment is to document existing conditions, including historical trends, relevant to the issues identified in the first step. This will provide baseline data against which subsequent social changes can be assessed.

(2) Technical and consultative methods should be used in establishing the required data. The range of information that could be relevant is outlined in Table 1. This is not an exhaustive list and professional judgement is needed to ensure that only information relevant to the application should be provided.

(3) A guide to baseline information for documenting existing social conditions is shown over.

Table 1 - Relevant Information

Community Impact Type	Relevant Baseline Information On Existing Social Conditions
Accessibility (including visitability)	■ Existing patterns of access and mobility ■ Vehicular, pedestrian and bike movement ■ Public transport ■ Private vehicle ownership
Demographic change	■ Age distribution ■ Ethnicity ■ Nature of households and families ■ Income and employment ■ Growth forecasts
Community Issues	■ Perceptions of amenity ■ Cohesiveness of the community ■ Crime and safety levels/perceptions of safety ■ Places of local significance/local landmarks ■ Aspects of sense of place ■ Level of activity by community organisations ■ Existing cultural/social patterns and networks ■ Health statistics ■ Levels of and environmental emissions - air, noise, water, odour
Service and/or Facility	■ Availability and capacity of existing services and facilities, such as halls, churches, libraries, community centres, recreation facilities, education places, health services, social support services ■ Ability of the community to fund the development or expansion of new infrastructure ■ Opportunities for co-locating services/facilities ■ Known intentions of service/facility providers such as State Government
Cultural heritage and Indigenous issues	■ Important places ■ Cultural characteristics, events and practices ■ Cultural values
Development trends	■ Nature of development ■ Location ■ Effects of similar types of development in the area ■ Past development activity and trends
Economic trends	■ Employment/unemployment (current status and trends) ■ Nature and location of employment ■ Income ■ Local business development (current status and trends) ■ Nature of skills/level of education
Housing	■ Housing supply ■ Housing type ■ Tenure of housing, ownership, rental, private/public ■ Cost of housing (purchase and rental) ■ Housing to meet particular community, such as boarding houses, emergency housing
Groups with particular needs	■ Availability/capacity of services required to support the needs of people with particular needs, such as older people, people with disabilities, non-English speaking people, indigenous people, workers, residents and visitors

12.3.5 Predicting Community Impacts

(1) Predict the likely impacts of the development proposal and alternatives to the proposal, including a 'no development' scenario. This section should identify -

(a) the changes that would occur if the development went ahead;
(b) who is likely to be affected by the development and in what way;
(c) the changes that would occur if the development did not proceed;
(d) the community impacts likely to occur during the construction and operational phases of the development;
(e) any cumulative impacts.

(2) Historical trends affecting the community, and the experience of impacts arising from similar developments elsewhere should be taken into account as part of this step.

(3) The following provides a guide to matters to be considered in predicting community impacts -

(a) impacts on the population size and structure, such as where itinerant employees may be involved during the construction phase. This information should be assessed for both construction and operational phases;
(b) impacts on the social, cultural, economic and employment profile;
(c) impacts on current community service provision, capacity, changes in demand to infrastructure(hard and soft) and community access to these services;
(d) impacts on the demand for and accessibility to community services and facilities;
(e) impacts on community values, lifestyle and aspirations;
(f) impacts on places of social value such as local landmarks and other places of heritage significance, places of public activity and the character of the area, physical and social;
(g) impacts on the sense of place and identity;
(h) the ability of local people to participate in employment opportunities and local business and economic development opportunities;
(i) traffic and environmental emission impacts for construction and operational stages;
(j) impacts of lighting on existing and future neighbouring uses;
(k) impacts of lighting, landscaping, accessibility and other aspects of the design on perceptions of personal safety and crime levels;
(l) level of accessibility to the site, in the site and between sites;
(m) adequacy of access to public transport, pedestrian and bike facilities, as well as private vehicular access;
(n) housing choice and location appropriate to meet forecast housing need, including affordable housing and any specialised housing needs;
(o) impacts on housing cost;
(p) integration of the development with surrounding uses;
(q) implications for local government finances, both revenue and expenditure;
(r) impacts on crime levels and the perception of safety;
(s) issues involving the integration of incoming residents/employees with the existing community and community activities;
(t) the community likely to be affected and the nature of the effects;
(u) infrastructure likely to be affected and the nature of the effects;
(v) how long the impacts are likely to last;
(w) the level of social change that is likely to occur.

(4) Some typical community impacts of development that should be assessed include -

(a) alteration to housing choice and mix;
(b) availability of support services for people with particular needs, such as older people and people with disabilities;
(c) changes in community activity;
(d) changes to accessibility;
(e) changes to cultural activities and places;
(f) character and amenity impacts;
(g) community safety impacts;
(h) community severance;
(i) disempowering groups or individuals through change;
(j) changed levels of employment access and opportunities;

(k) financial gain/loss to the community;
(l) local economic and business development;
(m) health effects;
(n) impacts arising from inappropriate location and design;
(o) need for community services and/or facilities;
(p) population change;
(q) sense of place and identity impacts.

(5) These possible impacts are described by development type in Table 2.

Table 2 - Possible Impacts

Development Type	Possible Impacts / Issues
Areas undergoing transition and emerging communities	■ **Demographic change** ■ **Community issues**: character and amenity; sense of place and identity; community safety and health effects. ■ **Economic issues**: employment access and opportunities and local economic development. ■ **Housing**: housing choice and mix; housing supply; housing for special needs groups. ■ **Service and/or facility requirements**: need for community services and/or facilities. ■ **Groups with particular needs**: availability of support services. ■ **Other**: cumulative effects.
Community facilities (including community facility, places of worship, cultural centres, youth centres and child care centres)	■ **Community issues**: accessibility including visitability; character and amenity; community safety; and health effects. ■ **Cultural and heritage issues**: cultural activities and places; needs of indigenous people; and needs of non-English speaking people. ■ **Groups with particular needs**: needs of children and youth; needs of older people; and needs of people with disabilities. ■ **Service and/or facility requirements**: integration of services/facilities; and appropriateness of design and location. ■ **Other**: appropriateness of design and location.
Major Indoor and outdoor recreation facilities and public venues	■ **Community issues**: accessibility including visitability; character and amenity; sense of place and identity; community safety, and health effects. ■ **Service and/or facility requirements**: relationship to centres. ■ **Other**: appropriateness of location and design.
Housing development that significantly changes population	■ **Demographic Change** ■ **Community issues**: accessibility including visitability; character and amenity, sense of place/identity; and community severance. ■ **Cultural and heritage issues**: cultural activities or places. ■ **Economic issues**: employment access and opportunities; and local economic development. ■ **Housing issues**: housing choice and mix; housing appropriate to meet known needs; housing for special needs groups; housing supply; appropriateness of housing; and availability of support services if special needs groups are involved. ■ **Service and/or facility requirements** ■ **Other**: appropriateness of design and location.
Housing for special needs	■ **Community issues**: accessibility, including visitability. ■ **Housing issues**: availability of support services/facilities. ■ **Other**: appropriateness of design and location.

Development Type	Possible Impacts / Issues
Industrial premises new or expansion of existing	■ **Community issues**: accessibility, including vistability, character and amenity; community severance; community safety; and health effects ■ **Economic issues**: employment access and opportunities; and local economic development. ■ **Service and/or facility requirements** ■ **Other**: cumulative effects.
Infill development	■ **Demographic Change** ■ **Community issues**: accessibility (including visitability); character and amenity; sense of place/identity; community severance; community safety. ■ **Cultural and heritage issues**: cultural activities and places. ■ **Housing issues**: housing choice and mix; housing appropriate to meet known need; housing for special needs populations; housing supply; and appropriateness of housing. ■ **Service and/or facility requirements**: need for community services and/or facilities. ■ **Other**: cumulative effects.
Institutions, hospitals etc	■ **Community issues**: accessibility, including visitability; character and amenity; sense of place and identity; community safety; health effects; and integration with existing community. ■ **Service and/or facility requirements**: relationship to centres. ■ **Other:** appropriateness of location and design such as human scale.
Residential reconfiguration, or other large housing developments	■ **Demographic Change** ■ **Community issues**: accessibility, including visitability; character and amenity, sense of place/identity; and community severance. ■ **Cultural and heritage issues**: cultural activities or places. ■ **Housing issues**: housing choice and mix; housing appropriate to meet known needs; housing for special needs groups; housing supply; appropriateness of housing; and availability of support services if special needs groups are involved. ■ **Service and/or facility requirements** ■ **Other**: appropriateness of design and location.
Multiple dwellings or apartment buildings	■ **Demographic Change** ■ **Community issues**: accessibility, including visitability; character and amenity; sense of place/identity; and community severance. ■ **Cultural and heritage issues**: cultural activities or places. ■ **Housing issues**: housing choice and mix; housing appropriate to meet known needs; housing for special needs groups; housing supply appropriateness of housing; and availability of support services if special needs groups are involved. ■ **Service and/or facility requirements** ■ **Other**: appropriateness of design and location.

Development Type	Possible Impacts / Issues
Centre development	■ **Community issues**: accessibility, including visitability; character and amenity; sense of place and identity; community severance; and community safety. ■ **Cultural and heritage issues**: cultural activities and places; economic issues. ■ **Service and/or facility requirements**: integration of services/facilities; groups with particular needs. ■ **Other:** appropriateness of design and location.
Park Residential development	■ **Demographic Change** ■ **Community issues**: accessibility (including visitability); character and amenity; sense of place/identity; and community development severance. ■ **Cultural and heritage issues**: cultural activities or places. ■ **Service and/or facility requirements**
Indoor and outdoor recreation facilities	■ **Community issues**: accessibility, including visitability; character and amenity; sense of place and identity; community severance, and community safety. ■ **Cultural and heritage issues**: cultural activities and places. ■ **Economic issues**: employment access and opportunities; and local economic development. ■ **Groups with particular needs**
Tourist and entertainment developments (including motels, tourist accommodation)	■ **Community issues:** accessibility, including visitability, character and amenity; sense of place and identity; community developments severance; and community safety (including motels and pleasure activities). ■ **Cultural and heritage issues**: cultural activities and places. ■ **Economic issues**: employment access and opportunities, and local economic development. ■ **Service and/or facility requirements** ■ **Groups with particular needs**
Transport infrastructure (including roads, busway facilities)	■ **Community issues**: accessibility, including visitability, character and amenity; community severance; community safety; and health effects. ■ **Groups with particular needs**: children, and people with disabilities.
Community facilities such as youth centres	■ **Community issues**: accessibility, including visitability, character and amenity. ■ **Other**: appropriateness of design and location.

12.3.6 Assessing the Likely Impacts

(1) Assess the level of importance of the predicted impacts and examine the responses that could help avoid or minimise the negative impacts and promote the positive impacts of the development, taking into account alternative proposals.

(2) Considerations in determining the significance of community impacts include -

(a) the number of people likely to be affected;
(b) principles of social justice such as equity, access, fairness, inter-generational impacts;
(c) the extent to which the interests of the community as a whole are enhanced or sustained;
(d) the degree of change likely to arise as a result of the development relative to the existing circumstances;
(e) the duration of the impact;

(f) the importance of the objectives of the plan;
(g) the level of controversy anticipated;
(h) whether or not the impacts would represent a good planning outcome.

12.3.7 Mitigating, Enhancing, Managing and Monitoring

Provide documentation of, and justification for, the strategies proposed for mitigating, enhancing, managing and monitoring the predicted impacts. This could be through the completion of a Social Impact Management Plan.

12.4 Social Impact Management Plans

(1) Once a Social Impact Management Plan has been approved by the local government, the development will be carried out in accordance with this approved plan.

(2) A Social Impact Management Plan may be requested, in order to document measures to be implemented to manage the predicted impacts of a proposal. These can apply for the life of the project, including construction and operational stages. The plan should establish -

(a) requested levels of performance for the development;
(b) a monitoring regime for checking performance;
(c) strategies for rectifying any diversion from (a) and (b).

(3) The information requested by the assessment manager and/or referral agencies to be included in the Social Impact Management Plan will vary for each individual development proposal, and may deal with the management of one or a number of impacts. The content of the plan will vary depending on the nature and scale of the development, the characteristics of the site and the surrounding community, and the impacts generated by each proposal. This is necessary, as an approach used to deal with an impact on one site may not necessarily be appropriate for other sites due to different community characteristics.

(4) The plan details the management strategies to be implemented for identified impacts and may be requested to include all stages of development as well as monitoring, corrective actions and complaint response. The plan should also include specific performance indicators.

(5) The plan should demonstrate the commitments made to community impact management by specifying -

(a) all potential impacts;
(b) performance criteria establishing acceptable levels of impact;
(c) mitigating strategies for minimising identified impacts;
(d) monitoring and reporting processes to enable performance against the performance criteria to be measured;
(e) a contingency plan or corrective actions to be implemented if an undesirable or unforeseen level of impact occurs;
(f) procedures for monitoring and reporting and periodic review and updating of the plan.

12.5 Reference Material

(1) Useful references that may assist in preparing the Social Impact Report or Management Plan are the following documents which are available from the Local Government Association of Queensland -

(a) *Social Planning Guidelines for Queensland Local Government*, (Colin Menzies, 1996);
(b) *Social Impact Assessment for Queensland Local Government*, (Wendy Bell and Andrew Jones).

12.6 Applicability of Economic Impact Assessment Policy

(1) An Economic Impact Assessment Report may be required as part of a Social Impact Assessment process or in support of a development application involving -

(a) any commercial activity outside a centre above 250m^2 gross floor area; or
(b) any major development outside of the preferred zoning considered necessary by the local government.

Note -

For the purpose of this policy, a commercial activity includes all uses categorised under Commercial in the note attached to Part 9 - Schedule 3 - Dictionary.

(2) The purpose of the Economic Impact Assessment Report is to -

(a) provide information on the proposal;
(b) determine the potential economic impacts of the proposal;
(c) determine the community need and impact on the planning scheme.

(3) The Economic Impact Assessment Report will include -

(a) identification of the catchment of the retail and commercial development and the existing centres within the catchment;

(b) identification of the extent of existing commercial floor space and approved new commercial floor space in the area likely to be serviced by the proposed facility and in surrounding areas which could be affected by it. It should be ascertained whether the proposal would create an excess of commercial floor space in the catchment;

(c) estimation of the demand, or likely future demand, for commercial floor space in the catchment area;

(d) estimation of expenditure available within the defined catchment or study area;

(e) estimation of the turnover of existing centres within the catchment area which are likely to be affected by a new development;

(f) estimation of the turnover of the new development;

(g) identification of the changing trends in shopping and other behavior relating to community needs which may affect the proposal;

(h) estimation of the quantum of consumer retail spending available in the catchment area which will be diverted from the existing centre to the new retail development. This assessment will highlight the locational source of spending by zone and in more complex urban catchment areas specify the source of spending by zone.

this page purposely
left blank

Planning Scheme Policy 13 - Telecommunications Facilities

13.1 Purpose

(1) The purpose of this policy is to -

(a) encourage landowners and carriers to share infrastructure facilities or to co-locate, co-mast or co-site facilities where appropriate and practicable, in order to minimise adverse environmental and visual amenity impacts;
(b) encourage impact mitigation measures that protect community values, especially visual character values;
(c) encourage the adoption of best practice procedures by carriers in terms of innovative design, environmental management and work practices, to accord with good engineering and environmental standards;
(d) ensure that public safety is maintained.

13.2 Applicabilit y

This policy applies to all development applications for telecommunication facilities under the Redlands Planning Scheme.

13.3 Application Requirements

(1) Development applications for telecommunications facilities should be accompanied by the following information. If this information is not provided, it is likely that the local government will request the outstanding information during the information request period thus delaying the assessment of the proposal -

(a) a detailed explanation and justification of why the facility is required, giving reference to a coverage diagram which identified holes in coverage. Refer to Diagram 1 in Part 6 - Division 26 - Telecommunications Facilities Code;

(b) an evaluation of siting options, including feasibility of facility sharing, co-location or clustering or alternative locations, including documented evidence with other carriers or utility providers demonstrating that all possible options for co-location in the area have been investigated;

(c) a location map showing the subject site for the proposal;

(d) a site plan drawn to scale showing -
(i) the location, dimensions and boundary setbacks of the proposed facility;
(ii) the location of existing structures on the site and existing vegetation;
(iii) access and carparking areas;
(iv) landscaping areas;
(v) all proposed site works;

(e) a description of the proposal including -
(i) the type of facility and its role within the network;
(ii) the height and width of the facility and any associated structures;
(iii) the roof form and pitch of any equipment or storage buildings;
(iv) details of environmental impacts resulting from the development, and proposed revegetation, habitat enhancement and erosion control strategies;
(v) details of all council assets or infrastructure that will be affected by the proposed works;
(vi) the proposed construction materials, patterns, textures, and colours;
(vii) construction techniques;
(viii) timeframes in which the proposed works and site restorations will be performed;

(f) elevation drawings of proposed facilities or structures;

(g) an assessment of the facility's visual impact and how this impact has been addressed. This assessment should include a photo montage and/or an artist's impression of the proposed facility, as well as the following information -
  (i) the elevation, visual prominence and visual significance of the proposed facility;
  (ii) the height, scale, bulk, colour and external treatment of the proposed facility;
  (iii) the visual impact of the proposal on the surrounding area, in particular;
    a. views from established tourist routes and destinations;
    b. the streetscape of adjacent roadways;
    c. views from adjacent property;
  (iv) an analysis of the potential for the facility to cast shadows on adjoining properties, and the extent of any shadowing demonstrated by shadow diagrams;

(h) a demonstration of how the proposed telecommunication facility complies with -
  (i) the Telecommunications Facilities Code;
  (ii) the *Radiocommunications (Electromagnetic Radio Human Exposure) Standard 1999*, through the inclusion of accurate data on the predicted level of radio frequency radiation to be emitted from proposed facilities in addition to the background (existing) levels present on the site.

13.4 Design Considerations

13.4.1 Site selection and design

(1) Site selection and design considers -

(a) the impact of the proposed development on the historical, archaeological, architectural, anthropological, nature conservation and cultural and social values of the development site and adjoining land;

(b) the potential conflicts with other uses on the site, including -
  (i) access and movement throughout and to the site;
  (ii) the area where the site is located;
  (iii) present and future uses in the vicinity;

(c) appropriate design and construction techniques that facilitate sharing the site with other carriers;

(d) appropriate design measures to prevent erosion and the flow of sediments into the stormwater system during and after construction, especially on elevated land and hilltops;

(e) strategies to address impacts of noise and dust generated by the movement of heavy vehicles during construction, which impact on the environment and surrounding residents;

(f) prevention of aesthetic degradation, particularly in areas of environmental significance and heritage places, through proper removal of waste material generated during construction;

(g) provision of adequate access to the site and safe movement within the site, whilst minimising any impact on the environment;

(h) provision of sufficient parking space within the site boundary for service vehicles;

(i) mitigation of any potential unacceptable noise generated by the development through -
  (i) submission and preparation of a Noise Report by a suitably qualified and experienced person where impact on a sensitive receiving environment is likely to occur. This should include a statement of conformance with noise criteria specified in the *Environmental Protection Act 1994* or subordinate legislation of that Act;
  (ii) indication of location of potential noise sources and predicted noise levels at the nearest sensitive receiving environments;
  (iii) consideration of acoustic treatment for potential noise sources, including relocation of the source, and/or preservation of natural noise barriers;
  (iv) erection of barriers or other appropriate noise attenuation methods;

Note -

For further information refer to Part 11 - Planning Scheme Policy 5 - Environmental Emissions.

(j) mitigation of impacts such as instability, erosion of the land or other hazards caused by development on a site;

(k) mitigation of the impacts of the proposed location of structures, access to these structures and the associated vegetation clearing on the conservation value of significant natural features such as wetlands, waterway corridors, fauna habitats, fauna movement corridors or flora habitats;

(l) prevention of adverse impacts on sensitive Commonwealth lands.

13.4.2 Design and construction solutions

(1) Solutions to minimise impacts on visual amenity are considered, including -

(a) existing vegetation is not removed from the site except where vegetation interferes with the proper functioning of telecommunication facilities. The local government may give permission to remove such vegetation;

(b) the facility is located so that surrounding landforms can be utilised to screen the facility;

(c) proposals within sites that have been clear felled or denuded of natural vegetation are to be accompanied by a proposal for major landscaping and screening works. Additional landscaping is to be of a sufficient density and height within two years following construction to screen the facility (to the satisfaction of the local government), while maintaining personal security in the vicinity of the facility;

(d) the structure is painted where mounted on a building;

(e) the finish or colour of the structures is appropriate taking into account the natural backdrop and landscape setting, and reduces glare and reflectivity;

(f) the design of the structure complements the surrounding environment;

(g) the structure is limited to a reasonable height to achieve its function;

(h) when the structure is no longer required, the carrier agrees to remove the structure and reinstate the site.

13.4.3 Co-location

(1) The location and design of facilities involves -

(a) sharing of existing sites where this will be less visually obtrusive than multiple sites;

(b) location of telecommunications equipment on an existing building or structure, including antennae mounted on the roof of buildings or on the building facade where appropriate, or co-located with other compatible land uses;

(c) erection of new towers only in locations where the predominant land uses are utility installations, or in industrial zones, centre zones, rural non-urban zone or open space zone;

(d) location of telecommunications facilities clear of residential uses or other sensitive receiving environments.

13.4.4 Visual amenity

(1) Minimise adverse visual amenity impacts through appropriate -

(a) site selection, considering -

(i) the elevation, visual prominence and visual significance of the site;
(ii) the relative elevation of adjoining land;
(iii) whether the site adjoins, or is within the line of sight of existing or future residential areas;

(b) location of structures within the site;

(c) height, shape, form and bulk of the installation;

(d) materials, configuration, finish and colour of the installation;

(e) consideration of how the facility would appear from a street or other public place and how it would impact on the character of other development in the vicinity;

(f) consideration of how the facility would impact on the natural outlook of existing or proposed developments on nearby sites.

13.4.5 Public safety

(1) Site selection and design ensures -

(a) all measures are taken to ensure public health and safety;

(b) power output levels from any transceiver tower are as low as possible and do not exceed the maximum exposure limit set by *Australian Standard 2772.1 - Radio Frequency Radiation - Maximum Exposure Levels*;

(c) a report is to be prepared by a suitably qualified and experienced person to demonstrate compliance with *Australian Standard 2772.1 - Radio Frequency Radiation - Maximum Exposure Levels;*

(d) the site is able to be secured by security fencing, where it is necessary to prohibit access by the public and to maintain public safety;

(e) warning or information signs are erected where necessary.

Planning Scheme Policy 14 - Waterways, Wetlands and Moreton Bay

14.1 Purpose

(1) The purpose of this policy is to -

(a) provide information about the technical requirements of development within or adjoining areas shown on the Waterways, Wetlands and Moreton Bay Overlay;

(b) describe the relationship of outcomes in the Habitat Protection Overlay, and Landscape and Stormwater Management Codes to outcomes of the Waterways, Wetlands and Moreton Bay Overlay.

14.2 Application

(1) The policy applies to -

(a) development that is subject to the Waterways, Wetlands and Moreton Bay Overlay including development affected by -
(i) major and minor waterways;
(ii) coastal drainage areas;
(iii) Moreton Bay foreshore buffer;
(iv) freshwater wetlands;
(v) natural drainage lines;
(vi) Tingalpa reservoir;

(b) applications that are likely to result in adverse impact on waterway and wetland values;

(c) development that is -
(i) impact assessable;
(ii) has identified ecological or environmental values that require long-term management.

14.3 Interpretation

(1) Part 9 - Schedule 3 - Dictionary defines terms used in the policy.

(2) Appendix 1 - Glossary also defines terms used in the policy.

14.4 Waterway Management Objectives

(1) The Waterways, Wetlands and Moreton Bay Overlay, relevant codes and this policy seek to achieve three waterway management objectives -

(a) <u>riparian zone ecology</u> - within buffer zones the primary objective is to work with vegetation to achieve a structurally and ecologically stable zone of riparian vegetation that -
(i) maintains and improves water quality;
(ii) maintains and improves waterway and bank stability;
(iii) maintains and improves fauna and flora habitat.

(b) <u>water quality</u> - the primary water quality objective to be achieved by application of the policy is ecologically and structurally stable waterways that contribute to the maintenance and improvement of water quality as measured by water quality objectives[1].

[1] *Riparian Land Management Technical Guidelines Volume Two: On-ground Management Tools and Techniques*, Land and Water Resources Research & Development Corporation, November 1999.

A secondary objective is stormwater run-off that maintains or enhances waterway environmental values and measurable water quality objectives.

(c) waterway processes - the structural stability of the bed and banks of waterways are maintained or enhanced through the application of treatments that maintain or improve waterway environmental values and that replicate unmodified flow patterns.

(2) It is recognised that these objectives should be pursued in balance with the needs of managing water flow, in particular during flood events.

14.5 Waterway Buffer Zone Areas - Ecology

14.5.1 Buffer Zone Area - Function and Composition

(1) The following information will assist in achieving riparian zone ecological objectives -

(a) a well-established riparian vegetation community serves several functions including maintaining waterway channel bank stability, removing nutrients and pollutants from stormwater run-off, providing habitat for fauna and flora, and suppression of weed growth.

(b) the buffer zones shown on the Waterways, Wetland and Moreton Bay Overlay Map and described in the code are based on required distances for -
- (i) filtration of a number of pollutants contained in stormwater overland flows;
- (ii) bank stability;
- (iii) diversity of flora species;
- (iv) protection of fish habitat areas;
- (v) provision of wildlife corridors;
- (vi) maintaining suitable in-stream water temperatures, for aquatic flora and fauna;
- (vii) shading;
- (viii) maintenance of scenic amenity and landscape features.

(c) the Waterways, Wetlands and Moreton Bay Overlay Code defines two components of the waterway or wetland buffer zone area, namely -
- (i) a core riparian area;
- (ii) an outer riparian area.

(d) the riparian vegetation structure should comprise the following elements -
- (i) canopy - through trees;
- (ii) understorey - including shrubs and trees;
- (iii) groundcover species - that may include native herb species;
- (iv) vines.

(e) the structure, density and spacing of vegetation on the waterway channel bank will vary from site to site.

(f) canopy trees have the most significant effect on the stability of waterway channel banks, due to -
- (i) their above ground size and weight;
- (ii) the below-ground extent of their root systems that binds the earthen bank of the channel and counteracts the effect of stream bank erosion.

(g) In the absence of some of these components, others, such as canopy trees, will have more significance in influencing the stability of the banks.

14.5.2 Enhancement Activities in Buffer Zones

(1) When undertaking enhancement planting of riparian or foreshore vegetation in buffer zones, the recommended order of approaches is -

(a) *rehabilitation* including -
- (i) weed treatment and exclusion;
- (ii) regeneration of native species, incorporating exclusion fencing or tree protection;

(iii) monitoring of vegetation establishment and weed re-growth[2];

(b) *re-vegetation* including -
(i) selecting species appropriate to the site from Schedule 10 - Vegetation Species List;
(ii) utilising information about specific vegetation communities as detailed in -
a. Planning Scheme Policy 4 - Ecological Impacts;
b. *Vegetation Enhancement Strategy* (RSC, 2004);
c. *Remnant Native Vegetation Mosaics of Lands within Redland Shire* (LAMR, 2001);
(iii) monitoring of vegetation establishment and weed re-growth;

(c) *stabilisation* including -
(i) identifying the location and agent of waterway channel bank instability;
(ii) document the methods, incorporating a mix of soft engineering and re-vegetation, proposed to stabilise the bank in accordance with best-practice guidelines[1]&[5];
(iii) document methods for minimising impact on existing vegetation through work involved in instituting bank stabilisation techniques.

Notes -

- Local examples of stable and mature riparian vegetation, within the same waterway system, can be used as a guide to age and composition of riparian vegetation communities associated with a waterway system, and may constitute a starting point for rehabilitation, revegetation or stabilisation efforts.
- Junctions of waterways, bends and meanders in larger waterways are ideal places to commence rehabilitation and revegetation efforts due to the higher concentration of nutrients and seeds that are collected in these areas and that will act as a primary source for natural regeneration.

(2) In the case of enhancement activities in the waterway buffer zone, supplementary or replacement planting may be required, as identified through growth establishment and monitoring techniques conducted on site during the approved maintenance period.

(3) Where intensive agriculture activities, involving stock, are undertaken on a property adjacent to a waterway buffer zone, a permanent fence and gate are constructed to prevent intermittent access and allow for managed stock access to the buffer zone.

(4) The management objectives for stock access to the waterway buffer zone should be identified in the Property Management Plan prepared under Specific Outcome S7. of Part 6 - Use Codes, Division 16 - Intensive Agriculture.

14.5.3 Enhancement of Existing Constructed Waterbodies

(1) For the purposes of the Waterways, Wetlands and Moreton Bay Overlay Code, constructed waterbodies, such as dams, may form a component of a minor waterway or natural drainage line.

(2) Where these waterbodies lies within a waterway buffer zone the dam is retained.

(3) In the instance of a waterbody forming a component of a natural drainage line, the local government's preference is for retention of the waterbody, however some circumstance may require the modification of the dam.

(4) An ecological assessment report is undertaken and provides details of the function, any modification and treatment of the waterbody for conservation and community purposes.

(5) The ecological assessment report should consider the following conditions that apply in order to establish a safe usage zone around the waterbody perimeter -

(a) where the waterbody will not have public access –

(i) a temporary fence is erected for the full perimeter of the waterbody;

[2] Monitoring Regeneration – Fact sheet, Greening Australia (web site: www.greeningaustralia.org.au)

(ii) where this waterbody was historically associated with an agricultural activity, then the minimum setback distance for the perimeter fence should be 2 metres from the high level water mark. The temporary fence should be maintained in place for a minimum period equal to 12 months or the agreed on-maintenance period.

(iii) the temporary fence erected around the waterbody, should include no more than 2 formalised access points to the waters edge, with a length of 3-5 metres, and with the balance of the waterbody perimeter being rehabilitated or revegetated for a minimum set back distance of 2 metres to discourage access to the edge of the water;

(iv) at the end of the agreed on-maintenance period the temporary fencing is replaced by permanent fauna-friendly fencing which is aligned as directed by the local government.

(b) For waterbodies that will have public access -

(i) a permanent fauna-friendly fence is to be erected around the perimeter of the waterbody;

(ii) the fence around the waterbody is to be erected with a minimum setback distance of 4 metres from the high level water mark;

(iii) informative signage is erected at public access points, not less than 50 metres from the perimeter of the waterbody, specifying activities within the waterbody that are not-permitted due to the sensitivity of the waterway environmental values.

(6) For permanent fencing, lockable access points are provided for maintenance purposes.

Note -

- Refer to Planning Scheme Policy 9 - Infrastructure Works - Chapter 5, regarding design standards for the paving and design of formalised access points to the waterbody.
- Buffer zone enhancement requirements identified in this policy also incorporate those enhancement outcomes detailed in -
  - Planning Scheme Policy 4 - Ecological Impacts;
  - Planning Scheme Policy 9 - Infrastructure Works, Chapter 11 - Landscaping.

14.6 Water Quality of Receiving Waters

(1) The following information will assist in achieving water quality objectives.

14.6.1 Waterway Environmental Values and Water Quality Objectives

(1) All run-off to receiving waters should enhance and protect the water quality of receiving waters, being waterways, wetlands and Moreton Bay.

(2) The objective of enhancing and protecting water quality of receiving waters is achieved through *environmental values* and the application of *water quality objectives* to stormwater run-off.

(3) Waterway Environmental Values and Water Quality Objectives for fresh and marine waters are defined and scheduled under *Queensland Environmental Protection (Water) Policy, 1997*.

(4) By way of definition -

(a) *environmental values* are characteristics of waterways that the community considers are important to protect;

(b) *water quality objectives* are quantifiable measures of indicators, that can be physical, chemical or biological, that when consistently measured over time, will protect waterway environmental values. The measurable indicators of runoff are against water quality objectives to determine approval for discharge.

(5) Environmental values and water quality objectives for individual waterways in a Local Government area are determined in conjunction with catchment-specific waterway management plans (WMPs).

(6) To date waterway management plans have been produced and adopted for the following waterways -

(a) Tingalpa Creek, including all tributaries and headwater streams in Redland City;

(b) Eprapah Creek;

(c) Hilliards Creek.

(7) The environmental values and water quality objectives for these waterways and all other water catchments in the local government area are contained in Part 9, Schedule 11 - Water Quality Objectives.

(8) The main pollutants associated with stormwater run-off and their impact on waterways are[3] identified in Table 1.

Table 1 - Pollutants, Impacts and Water Quality Objectives

Pollutant	Impacts	Associated Water Quality Objectives
Nutrients (nitrogen, phosphorous)	Eutrophication, excessive nuisance plant growth	Total Nitrogen, Total Phosphorous
Sediment	Altered biological characteristics, altered hydraulic capability, turbidity, altered temperature regime	Turbidity, Suspended Sediment, Secchi Depth
Litter / gross pollutants	Depressed visual character, smothering of flora and fauna, potentially injurious to fauna	Litter / gross pollutants
Human or animal waste	Human health risk	Faecal coliforms
Oils and petroleum hydrocarbons	Mortality and sub-lethal effects on individual aquatic fauna, smothering of flora; mortality and sub-lethal effects on aquatic ecosystems; accumulation in sediments.	No visible or otherwise noticeable films or colouration on the water surface or through the water column.

(9) It is acknowledge that that some developments will be constrained in their ability meet discharge water quality objectives, due to either the nature of the site, including available area for stormwater treatment measures.

(10) These constraints may result in difficulty meeting water quality objectives for all key contaminants.

(11) In this circumstance, the assessment process will determine whether or not the development should be approved on water quality grounds.

(12) In some instances the local government may have undertaken water quality monitoring in waterways within or adjacent to the site. Contact the local government to verify if this information is available.

(13) The *Draft Queensland Water Quality Guidelines*[4] (QWQG) are numerical concentration levels or statements for indicators that protect a single or multiple environmental values.

(14) The QWQG include measures for range of indicators not included in Part 9, Schedule 11 - Water Quality Objectives of this planning scheme.

14.6.2 Management of Stormwater Run-off from Development to Receiving Waters

(1) To fulfil the requirements of the Stormwater Management Code and Planning Scheme Policy 11 - Infrastructure Works Policy, Chapter 6 - Stormwater Management, for conceptual design of stormwater treatment systems, it is recommended that applicants apply the *Guidelines for Pollutant Export Modelling in Brisbane Version 7 - Draft* (BCC 2003).

[3] This list is not exclusive and other pollutants associated with current or historic land use may be present in stormwater run-off.
[4] EPA, 2005. *Draft Queensland Water Quality Guidelines*, Queensland Environmental Protection Agency, Brisbane, Queensland.

Note -

- The local government has adopted these guidelines with the permission of Brisbane City Council.
- It is noted that Brisbane City Council's planning framework for water quality management as detailed in Chapter 1 of the Guidelines differs to that of Redland City Council. However the intent of this framework is similar to that of RSC and may be read as a guide.
- All information contained in Chapters 2-7 of the *Guidelines for Pollutant Export Modelling* is relevant to Redland City. However, all references to Brisbane City Council Water Quality Objectives must be substituted to refer to Redland City Council Water Quality Objectives.

14.6.3 Design Standards for Water Sensitive Urban Design (WSUD) Infrastructure

(1) For the purpose of water sensitive urban design technical guidelines refer to *draft Water Sensitive Urban Design Guidelines: Stormwater*, (BCC, 2003)

Note -

- The local government is preparing similar guidelines which are due for completion in 2006.
- The BCC guidelines are adopted as an interim measure.
- The BCC guidelines are applicable to requirements contained in both the Landscape Code and Stormwater Management Code for development on Southern Moreton Bay Islands.

14.6.4 Methods for Stormwater Monitoring

(1) Water quality monitoring of stormwater outflows through infrastructure is a recommended method of measuring compliance with water quality objectives.

(2) In addition to other requirements of the stormwater management plan, it is recommended that a water quality monitoring program be implemented during the operational works phase and on-maintenance stages.

(3) The water quality monitoring program should include -

(a) water quality indicators such as total nitrogen, total phosphorous, suspended solids / turbidity, and dissolved oxygen;

(b) one or more test site(s) within the development area or at the legally identified discharge point(s) for stormwater and, if adjacent to a waterway, one site within the receiving waters nearest to the discharge zone;

(c) frequency of sampling - monthly during the agreed on-maintenance period;

(d) documentation / recording - written copies of water quality records for each sampling event that is maintained by the party responsible for stormwater management.

14.7 Waterway Channel Processes

(1) The information presented in this section will assist in achieving objectives for waterway channel processes.

14.7.1 Background

(1) Waterways, excluding wetlands, are dynamic features of the landscape that are continuously moving, spatially and temporally, within broad floodplain corridors under the influence of run-off from the surrounding catchment and in response to the geomorphological characteristics of the catchment and artificial changes such as straightening of bends, creation of barriers to flow and high-energy stormwater inputs among others.

(2) Erosion processes within the waterway channel occur under natural conditions as a result of the interaction of water flows and the physical bed and banks of the waterway.

(3) Natural erosion processes often have negative impacts when infrastructure is created within the floodplain corridor or when erosion and sedimentation processes disturb ecosystem processes.

(4) Waterways in urban areas often demonstrate instability through active erosion of the bed and banks of waterway channels as a result of highly modified catchment run-off conditions, altered flooding and flow regime and location of infrastructure within or crossing waterway channels.

(5) Identifying erosion processes is a fundamental precursor to successful rehabilitation or revegetation of riparian buffer zones.

(6) The following section describes different types of bank erosion.

14.7.2 Types of Bank Erosion

(1) There are several forms of erosive process in waterway channels that result in erosion and unstable bed and banks of waterways.

(2) The most common forms of waterway bank erosion and a brief description of their appearance, include[5] -

(a) sub-aerial erosion - the major types of sub-aerial erosion are related to vegetation and climatic conditions, including - .
  (i) wind thrown trees - where trees are knocked over and their root balls detach from the bank, results in sediment delivery to the waterway and erosion of the bank in the space where the root ball was located;
  (ii) weather conditions that lead to the wetting and prolonged drying of bank soil often make the soil more erodible. Vegetation coverage and shading reduce the exposure and drying of banks and reduce cracking of soil through the action of plant roots;
  (iii) erosion of soil on waterway banks through the action of rain splash is exacerbated by the absence of vegetation, mulch and leaf litter coverage. A well-vegetated waterway bank significantly reduces erosion by this means;
  (iv) the action of flood water triggers erosion through the mechanism of slaking. This form of erosion is more common where the bank is rapidly immersed by water and where there is poor root reinforcement;
  (v) the action of trampling of banks by introduced hard hoofed animals reduce plant coverage and increases exposure leading to bank erosion by other agents.

(b) scour - vegetation on the waterway bank plays a significant role in reducing scour erosion that is largely associated with moderate to high velocity flows and flooding, where banks are temporarily submerged. Dense coverage by grasses and smaller shrubs and stands of trees can reduce the effects of scouring. Excessive scouring is associated with significant silt and sediment deposition in waterway channels and on flood plains.

(c) mass failure - this form of erosion is generally the most visible as it consists of whole blocks of material that slide or topple into the channel. Gravity is the primary causative agent in mass failure, acting on the slope, soil properties and vegetation of the bank.

(3) The types of erosion vary depending on the waterway reach type -

(a) in upland creeks, being natural drainage lines, first-order streams and some minor streams, sub-aerial erosion is often the dominant category of erosion;

(b) in mid-basin streams being second-order, third and fourth-order streams, minor and major waterways, sub-aerial erosion in combination with scour is often the dominant category of erosion;

(c) in lowland streams, being fourth and fifth order streams with steeply sloping banks, mass failure is often the dominant erosion category, particularly where there has been a history of human or stock access and consequent removal of vegetation.

[5] *Riparian Land Management Technical Guidelines*, Volume One, Chapters 6 and 7, Land & Water Resources Research & Development Corporation, November 1999.

14.7.3 Contributing to Waterway Stability

(1) Addressing waterway, bed and bank, instability should be undertaken using a continuum of approaches with a first preference on application of ecological engineering, or natural channel design, methods.[6]

(2) Further intervention, or hard engineering, at the least preferred end of the continuum, is appropriate only where soft engineering methods are not able to contain the hydraulic pressures placed on the waterway, or where damage to infrastructure is threatened by hydraulic process.

(3) Where remedial action or intervention is required in the waterway channel to address active erosion, this should be based on identification and assessment of the agents of erosion, such as high velocity, flows, bank height or structure, obstacles to flow, removal of bank vegetation, altered flow regime.

(4) Applying ecological engineering, or natural channel design, methods will contribute to the maintenance or achievement of waterway environmental values as presented in this policy.

Note -

It is recommended that an applicant proposing to undertake in-stream treatments to address waterway instability, liaise with the local government to ensure that proposals are compatible with implementation of Waterway Management Plans and waterway rehabilitation plans.

14.8 Restoring In-Stream Habitat

(1) Restoration of waterway in-stream habitats with rocks, woody debris and aquatic plants is encouraged.

(2) The composition and arrangement of these should be considered on a site by site basis to minimise impacts on erosion and potential for flooding and damage to downstream infrastructure.

(3) The placement of in-stream habitat materials is undertaken with consideration to existing hydraulic characteristics such as channel capacity and stream flow velocities.

(4) The principles associated with restoring in-stream habitats in waterways are contained in *Riparian Land Management Technical Guidelines, Volume One* (Land and Water Resources Research and Development Corporation, 1999).

14.9 Specific Requirements for Wetlands - Freshwater and Coastal and Tidal Affected Areas

(1) Due to the differing hydraulic characteristics of wetlands specific attention should be applied to stormwater run-off and weed control impacts.

(2) Re-vegetation in buffer zones of tidal areas should be guided by the 'tidal influence points' shown on the Waterways, Wetlands and Moreton Bay Overlay.

(3) These points are approximate only and reference to surrounding vegetation, upstream and downstream of the site, will determine the type of species used in re-vegetation activities.

14.10 Management of Weeds in Receiving Waters and Buffer Zone Areas

(1) Aquatic weeds, declared and environmental, under the *Land Protection (Pest and Stock Route Management) Act, 2002* are a concern where infestations, through transmission, result in infestations in waterways elsewhere in the local government area.

[6] Natural Channel Design Guidelines, Brisbane City Council, November 2003.

(2) Weed species identified in Part 9 - Schedule 12 - Weed Species List are eradicated from within the buffer zone areas of waterways, wetlands and Moreton Bay foreshore areas.

(3) The eradication of weed species is carried out in accordance with the requirements of Planning Scheme Policy 9 - Infrastructure Works, Chapter 11 - Landscaping.

14.11 Infrastructure in Buffer Zone Areas

(1) Where infrastructure is constructed within the buffer zone areas, its location and construction does not compromise the stability, or contribute to instability, of waterway banks.

(2) Stormwater quality treatment infrastructure is located outside the core buffer zone area;

(3) The management of stormwater where discharged in the buffer zone area is carried out in accordance with requirements of the -
   (a) Stormwater Management Code;
   (b) Planning Scheme Policy 9 - Infrastructure Works, Chapter 6 - Stormwater Management.

References

Land & Water Resources Research & Development Corporation, 1999, *Riparian Land Management Technical Guidelines, Volume One*, Land & Water Resources Research & Development Corporation.

EPA, 2005, *Draft Queensland Water Quality Guidelines*, Queensland Environmental Protection Agency, Brisbane, Queensland.

Brisbane City Council, 2005, *draft Water Sensitive Urban Design Guidelines: Stormwater*, Brisbane City Council.

Brisbane City Council, 2003, *Natural Channel Design Guidelines*, Brisbane City Council.

14.12 Appendix 1- Glossary

The following additional administrative terms have been used in this policy.

Coastal Drainage Area - This term applies to waterways on the Southern Moreton Bay Islands and North Stradbroke Island. Applies to permanent flowing creeks and streams, standing waterbodies and wetlands as well overland flow paths.

Marine Vegetation - For the purpose of this policy, has the definition contained in Section 8 of the *Fisheries Act, 1994*.

Dam - For the purpose of this policy, has the definition contained in Schedule 4 of the *Water Act, 2000*.

this page purposely
left blank

Planning Scheme Policy 15 – Landslide Hazard

15.1 Purpose

(1) The purpose of this policy is to –

(a) give guidance relating to the identification of potential slope instability areas;

(b) set out the requirements for preparation and submission of development applications, including technical reports, on land within designated Landslide Hazard Management Area;

(c) provide information relating to good engineering practices in regards to hillside development to assist applicants, engineers and planners in the design and application of appropriate type and form of developments that best reflects the capability of the land.

15.2 Applicabilit y

(1) This policy applies to all development applications under the Planning Scheme on land within a designated Landslide Hazard Management Area in accordance with the Landslide Hazard Overlay Map.

15.3 What is a Landslide?

(1) A landslide is the movement of a mass of rock, debris or earth down a slope. They are the result of shear failure of the soil and/or rock materials that make up the hill slope and they are driven by gravity.

15.4 Formulating a Development Proposal

(1) Every year in Australia landslides damage many houses and cause millions of dollars of damage to the natural and built environment including buildings, roads, railways and pipelines. Historical records indicate some 50% of all landslides recorded are a result of alteration to slopes by human activity.

(2) The planning and design of future development comprising building or other works on sloping sites should consider the relevance of the slope instability to the type of development proposed and if required the implementation of effective and timely remedial measures. Specific geotechnical requirements will depend on the hazard rating category as discussed in Section 15.6.

(3) As a general rule:

(a) development is not encouraged in High or Very High Landslide Hazard Management Areas. Where it can be demonstrated that development can not be located outside of the High or Very High Landslide Hazard Management Areas the development is subject to rigorous analysis and restrictions apply. Good hillside practices must be adopted and for the majority of situations a risk assessment with respect to landsliding will be required, Remedial measures may be required to reduce or control the risk of slope instability to acceptable levels.

(b) development in Moderate Landslide Hazard Management Areas may only be considered where appropriate restrictions apply. Good hillside practices must be adopted. A risk assessment with respect to landsliding would be prudent.

(c) development is practicable in areas with a Low or Very Low Landslide Management Area without specific restrictions related to landslide hazard. Good hillside practices should be adopted.

(4) It is strongly recommended that applicants arrange a pre-lodgement meeting with Council to discuss the inherent landslide hazards of a site identified as within the Landslide Hazard Management Area prior to the lodgement of a development application.

15.5 Landslide Hazard Mapping

(1) A regional qualitative study to establish hazard ratings with respect to landslide potential has been carried out for the Redland City area as detailed on the Landslide Hazard Overlay Map. The assessment of the hazard ratings was carried out in accordance with *SPP1/03 Guidelines – Mitigating the Adverse Impacts of Flood, Bushfire and Landslide* and is consistent with the procedures detailed in the paper entitled *"A Method of Zoning Landslide Hazards"* prepared by McGregor and Taylor.

(2) The implications of the hazard rating are given in Table 1. This serves as a tool for both planners and developers to determine the appropriate layouts, type and form of development that best reflects the capability of the land.

Table 1 – Implications of hazard classification

Hazard Rating	Description	Implications
VH (Very High)	The event is expected to occur	Extensive investigation, planning and implementation of treatment options essential to reduce risk to acceptable levels.
H (High)	The event will probable occur under adverse conditions	Detailed investigation, planning and implementation to treatment options essential to reduce risk to acceptable levels.
M (Moderate)	The event could occur under adverse conditions	May be acceptable provide treatment plan is implemented to maintain or reduce risk level.
L (Low)	The event might occur under very adverse conditions	Can be accepted. Treatment to maintain of reduce risk level should be defined.
VL (Very Low)	The event is conceivable but only under exceptional circumstances	Accepted. Managed by routine procedures.

(3) for individual sites within a designated Landslide Hazard Management Area, where slope instability is of concern, or areas that may impact on a Landslide Hazard Management Area as a result of the proposed development similar procedures can be applied for refinement of these hazard ratings, identification of unfavourable site conditions and control or manage such areas with regards to the proposed development.

15.6 Requirements for Preparation/Submission of Development Applications

(1) In accordance with the Landslide Hazard Overlay Code site specific assessment is required when a premises is affected by land designated a Moderate, High or Very High Landslide Management Area.

(2) If an applicant can NOT show reasonable cause that their proposed development is located outside land designated as a Moderate, High or Very High Landslide Management Area, and does not contribute to slope instability if such areas, the applicant must achieve the intentions of the Section 15.6.1 to 15.6.3 for the appropriate Landslide Management Area. Reasonable cause will be subject to the approval of Redland City Council, and may require supporting documentation by a suitably experienced geotechnical professional.

(3) In many cases most of the above information on site conditions may be common logic, supplemented by adoption of good hillside practices, or can be obtained during a walk-over survey by a suitably experienced geotechnical professional. However, it may be necessary to supplement the site observations by subsurface investigations such as boreholes or test pits.

(4) In some cases Landslide Hazard Management Areas may vary across the site. If this occurs, the requirements for preparation and submission of a development application should adopt the

higher hazard rating. In order to justify a lower Landslide Hazard Management Area rating, the developer must demonstrate that the proposed development is located a safe distance away from the areas of higher rating and does not contribute to increase slope stability.

15.6.1 Development within a VERY HIGH Landslide Management Area

(1) The following identifies the level of professional input that should be incorporated in the assessment, planning and design of proposed developments to suitably identify, control and manage risks associated wit development on, or with the potential to impact on, land designated as a Very High Landslide Hazard Management Area:

(a) carry out a detailed geotechnical engineering report prepared by a suitably qualified geotechnical professional (RPEQ qualifications). At a minimum the geotechnical engineering report should comprise:
- (i) an extensive site investigation including subsurface investigation with groundwater measurements over at least one wet season;
- (ii) frequency of investigation locations should be no less than 1 location per 30m x 30m grid with an assessment of material strength by appropriate in-situ or laboratory testing. Investigations should establish a comprehensive geotechnical model over the whole site;
- (iii) installation of groundwater monitoring points with measurements over at least one typical wet season and comparison of groundwater levels to rainfall events should be made;
- (iv) a review of potential hazards; and
- (v) analysis of slope stability using a suitable model appropriate for the conditions.

(b) where analysis of slope stability (see above) indicates an unfavourable factor of safety, it is necessary to assess the risks to the community with regards to loss of life, injury and damage to infrastructure.

(c) undertake comprehensive siting for the development with regards to potential hazards, including restricting design of major structures and unfavourable earthworks in Very High Landslide hazard Management Areas where possible.

(d) Extensive design input is required from a qualified Practicing Engineering professional, including adoption of good hillside construction practices as provided in this policy.

(e) The design must be reviewed and certified by an experienced, suitably qualified geotechnical professional (RPEQ qualifications).

(f) Planning and implementation of a program of regular maintenance of slopes, cleaning of drainage course and monitoring of slope for signs of distress.

15.6.2 Development within a HIGH Landslide Management Area

(1) The following identifies the level of professional input that should be incorporated in the assessment, planning and design of proposed developments to suitably identify, control and manage risks associated with development on, or with the potential to impact on, land designated as a High Landslide Management Area:

(a) carry out a detailed geotechnical engineering report by an experienced qualified geotechnical professional. At a minimum the geotechnical engineering report should compromise:
- (i) a site investigation including subsurface investigation with groundwater measurements;
- (ii) frequency of investigation locations should adequately cover the site and slope in question to provide sufficient information to establish a comprehensive geotechnical model over the whole site, with assessment of material strength by appropriate in-situ laboratory testing;
- (iii) installation of groundwater monitoring points with measurements over at least one typical wet season and comparison of groundwater levels to rainfall events should be made;
- (iv) a review of potential hazards; and
- (v) analyse slope stability using a suitable model appropriate for the site conditions.

(b) Where analysis of slope stability (see below) indicates an unfavourable factor of safety, it is necessary to assess the risks to the community with regards to loss of life, injury and infrastructure.

(c) Undertake appropriate siting for the development with regards to potential hazards, including restricting/reducing design of major structures and unfavourable earthworks in high landslide hazard areas where possible.

(d) Considerable design input from a qualified Practicing Engineering professional, including adoption of good hillside construction practices as provided in this policy.

(e) The design must comply with recommendations detailed on the geotechnical engineering report.

(f) Planning and implementation of a program of regular maintenance of slopes, cleaning of drainage courses and monitoring of slope for signs of distress.

15.6.3 Development within a MODERATE Landslide Management Area

(1) The following identifies the level of professional input that should be incorporated in the assessment, planning and design of proposed developments to suitably identify, control and manage risks associated with development on, or with the potential to impact on, land designated as a Moderate Landslide Hazard Management Area:

(a) Carry out a geotechnical engineering report by an experienced, qualified geotechnical professional. At a minimum the geotechnical engineering report should comprise:
   (i) site walkover survey with investigations as required establishing a geotechnical model over the whole site. This may require moderate subsurface investigation and/or testing to provide subsoil material properties;
   (ii) review potential hazards; and
   (iii) assessment pf slope stability using a suitable model appropriate for the site conditions.

(b) Consider the risks to the community with regards to injury or loss of life and damage to infrastructure and mitigate unacceptable risks.

(c) Design input from a qualified Practicing Engineering professional, including adoption of good hillside construction practices as provided in this policy.

(d) The design must comply with the recommendations detailed in the geotechnical engineering report.

15.7 Characteristics of Landslides

15.7.1 What types of landslides occur?

(1) Once a landslide is triggered, the material is transported in three forms;
   (a) by sliding along a failure surface;
   (b) by falling down a steep slope; and
   (c) by flowing as a suspended mass, usually in water for example a mudslide or debris flow.

(2) Landslides may be classified into the following main types:

Translational Sliders: where failure occurs on a planar surface or surfaces, usually natural defects in the material such as fissures, joints or bedding. Material within the slide can remain relatively undisturbed.

Creep Sliders: where failure occurs as a gradual downslope progression (often extremely slow rates) of slope material. The slide area may appear relatively undisturbed and identification of the slide is often reliant on surface features.

Rotational Sliders: where failure occurs through the material substance commonly on a concave surface. Material within the slide is considerably disturbed.

Topple: where failure occurs from the end over end motion of rocks on a down slope. Often resulting from closely spaced sub-vertical jointed rock outcrops.

Falls: where movement is by free-falling or rolling of fragments on steep slopes with outcrops of closely jointed rock.

Flows: where, after failure along a planar or concave surface, the material is transformed into a viscous fluid consisting of soil and rock particles suspended in water.

Complex: where there is a combination of one or more of the above mechanisms.

Figure 1 – Commons types of landslides

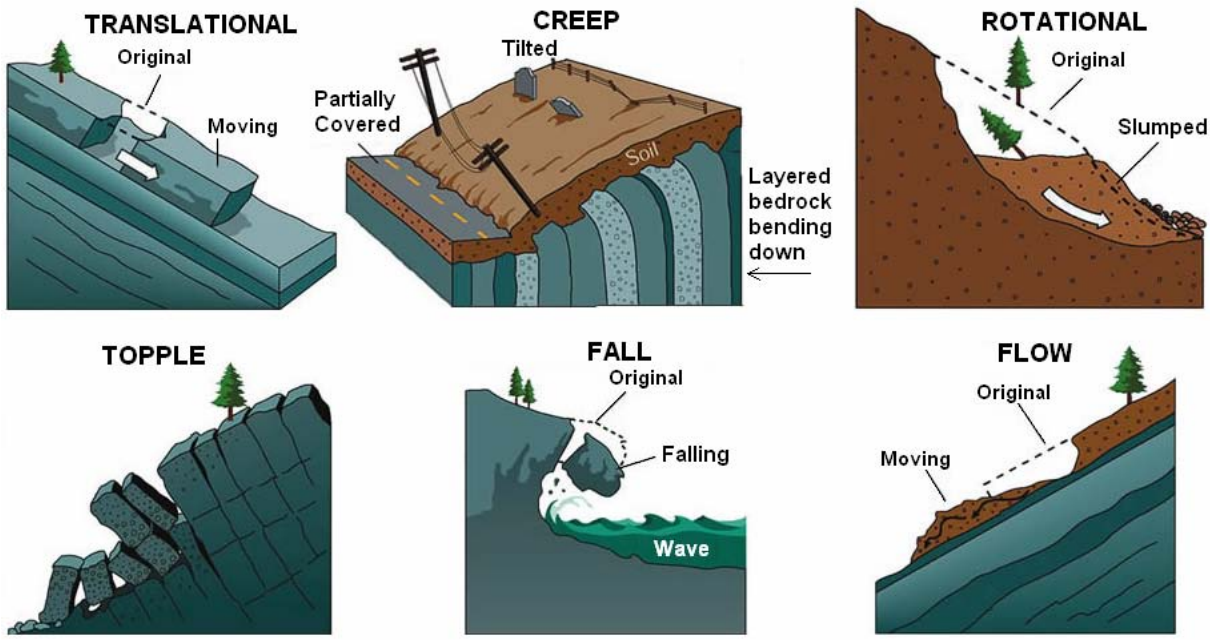

The above figure is courtesy of the Geosciences Australia Web-site. (www.ga.gov.au)

(3) The rate of landslide movement varies from extremely slow (millimetres for centimetres per year) to a sudden and extremely rapid (metres per second) as with rock fall or debris flow. Sudden and rapid events are the most dangerous because the lack of warning, the speed at which they can travel down the slope and the force impact.

15.7.2 <u>What causes landsliding?</u>

(1) The stability of sloping ground is controlled by three main factors:
- (a) the angle of the ground surface;
- (b) the strength of the materials below the ground surface; and
- (c) the level of water within the slope.

(2) In Australia intense rainfall is by far the most common trigger of landslides.

Several factors combine to define the complex relationship between the physical environment and land instability, however two basic conclusions can be drawn into the likelihood of their occurrence. Firstly, it is likely that landslides will occur in areas where they have occurred in the past, and secondly they are likely to occur in areas exhibiting similar conditions to these areas.

(3) Landslides can be triggered by both natural causes or by human activity.

(a) Natural causes may include:
- (i) saturation of slope material from rainfall or seepage;
- (ii) undercutting of cliffs and banks by erosion;
- (iii) prying loose of rock masses from vegetating growth within joints; and
- (iv) vibrations caused by earthquakes.

(b) Human activities may include:
- (i) the modification of slopes by cut and fill activities associated with construction;
- (ii) interference with or changes to natural drainage;
- (iii) leaking pipes (water, sewer);
- (iv) changes to materials;
- (v) the removal of vegetation;
- (vi) mining activities; and
- (vii) vibrations from heavy traffic, blasting or excavation.

15.7.3 Identification of potential slope instability

(1) In comparison to many other countries, much of Australia is subject to minimal landslide activity. Generally we receive little rainfall and the landscape has minimal influence from the processes of uplift.

(2) There are however certain areas that are more commonly affected by landslides. Such areas typically comprise cliffs, steep colluvial deposits, or gentler slopes of unstable geology subjected to prolonged or intense rainfall events. Landslide prone areas commonly comprise:
- (a) coastal cliffs;
- (b) existing or old landslides;
- (c) any sloping ground in an area known to have a landslide problem;
- (d) areas at or on the base of slopes;
- (e) within or at the base of minor drainage hollows; and
- (f) and the base or top of cut and fill slopes.

(3) In the natural environment the progressive development of hill slopes by weathering and erosion involves a gradual incision of the stream beds into higher ground and results in the formation of slope surfaces that are essentially uniform, convex or planar. The occurrence of natural landslides on these slopes produces an irregular profile, often concave, accompanied by features reflecting the disturbance that has taken place. In the case of recent landslides these features are usually sharp and distinct. With time, the effects of weathering and erosion modify these features which become indistinct but usually can be recognised by close observation. Individually the features may not be related to landsliding but the presence of several features at one location indicates that some mass movement of material may have occurred.

(a) Features that indicate existing natural slope instability include:
- (i) irregular surfaces: areas of hummocky ground and depressions indicating disturbed material;
- (ii) benches: anomalous flat areas in uniform sloping areas;
- (iii) scars: areas where vegetation has been stripped during slope movement;
- (iv) scarps: linear features showing the location of vertical displacement of the ground surface;
- (v) cracks: linear features showing lateral displacement of the ground surface;
- (vi) debris mounds: deposits of loose soil and rock on or at the base of slopes;
- (vii) disturbed vegetation: tilted trees; and
- (viii) seepage: presence of springs and sense vegetation regrowth.

(b) Features that indicate that some lateral mass movement of material may have occurred in areas that have been developed include:
- (i) cracking or tilting of walls and retaining structures;
- (ii) cracking or slumping of embankment slopes;
- (iii) cracking and fall of material from excavated slopes;
- (iv) broken/fractured water pipes and underground facilities;
- (v) tilted powerlines, retaining walls and fences (or offset); and
- (vi) sunken or cracked road surfaces.

15.8 Implementing Good Hillside Practices

15.8.1 What guidelines apply to development applications?

(1) Examples of Good and Poor Hillside Engineering Practice are given in Table 1 and Figure 2 below.

Table 1 – Guidelines for hillside construction practice

	GOOD ENGINEERING PRACTICE	*POOR ENGINEERING PRACTICE*
ADVICE		
GEOTECHNICAL ASSESSMENT	Obtain advice from a qualified, experienced geotechnical consultant at early stage of planning and before site works.	Prepare detailed plan and start site works before geotechnical advice.
PLANNING		
SITE PLANNING	Having obtained geotechnical advice, plan the development with the risk arising from the identified hazards and consequences in mind.	Plan development without regard for the Risk.
DESIGN AND CONSTRUCTION		
HOUSE DESIGN	Use flexible structures which incorporate properly designed brickwork, timber or steel frames, timber or panel cladding. Consider use of split levels. Use decks for recreational areas where appropriate.	Floor plans which require extensive cutting and filling. Movement intolerant structures.
SITE CLEARING	Retain natural vegetation wherever practicable.	Indiscriminately clear the site.
ACCESS & DRIVEWAYS	Satisfy requirements below for cuts, fills, retaining walls and drainage. Council specifications for grades may need to be modified. Driveways and parking areas may need to be fully supported on piers.	Excavate and fill for site access before geotechnical advice.
EARTHWORKS	Retain natural contours wherever possible.	Indiscriminant bulk earthworks.
CUTS	Minimise depth. Support with engineered retaining walls or batter to appropriate slope. Provide drainage measures and erosion control.	Large scale cuts and benching. Unsupported cuts. Ignore drainage requirements
FILLS	Minimise height. Strip vegetation and topsoil and key into natural slopes prior to filling. Use clean fill materials and compact to engineering standards. Batter to appropriate slope or support with engineered retaining wall. Provide surface drainage and appropriate subsurface drainage.	Loose or poorly compacted fill, which if it fails, may flow a considerable distance including onto property below. Block natural drainage lines. Fill over existing vegetation and topsoil. Include stumps, trees, vegetation, topsoil, boulders, building rubble etc in fill.
ROCK OUTCROPS & BOULDERS	Remove or stabilise boulders which may have unacceptable risk. Support rock faces where necessary.	Disturb or undercut detached blocks or boulders.
RETAINING WALLS	Engineer design to resist applied soil and water forces. Found on rock where practicable. Provide subsurface drainage within wall backfill and surface drainage on slope above. Construct wall as soon as possible after cut/fill operation.	Construct a structurally inadequate wall such as sandstone flagging, brick or unreinforced blockwork. Lack of subsurface drains and weepholes.
FOOTINGS	Found within rock where practicable. Use rows of piers or strip footings oriented up and down slope. Design for lateral creep pressures if necessary. Backfill footing excavations to exclude ingress of surface water.	Found on topsoil, loose fill, detached boulders or undercut cliffs.
SWIMMING POOLS	Engineer designed. Support on piers to rock where practicable. Provide with under-drainage and gravity drain outlet where practicable. Design for high soil pressures which may develop on uphill side whilst there may be little or no lateral support on downhill side.	
DRAINAGE		
SURFACE	Provide at tops of cut and fill slopes. Discharge to street drainage or natural water courses. Provide general falls to prevent blockage by siltation and incorporate silt traps. Line to minimise infiltration and make flexible where possible. Special structures to dissipate energy at changes of slope and/or direction.	Discharge at top of fills and cuts. Allow water to pond on bench areas.
SUBSURFACE	Provide filter around subsurface drain. Provide drain behind retaining walls. Use flexible pipelines with access for maintenance. Prevent inflow of surface water.	Discharge roof runoff into absorption trenches.
SEPTIC & SULLAGE	Usually requires pump-out or mains sewer systems; absorption trenches may be possible in some areas if risk is acceptable. Storage tanks should be water-tight and adequately founded.	Discharge sullage directly onto and into slopes. Use absorption trenches without consideration of landslide risk.
EROSION CONTROL & LANDSCAPING	Control erosion as this may lead to instability. Revegetate cleared area.	Failure to observe earthworks and drainage recommendations when landscaping.
DRAWINGS AND SITE VISITS DURING CONSTRUCTION		
DRAWINGS	Building Application drawings should be viewed by geotechnical consultant	
SITE VISITS	Site Visits by consultant may be appropriate during construction/	
INSPECTION AND MAINTENANCE BY OWNER		
OWNER'S RESPONSIBILITY	Clean drainage systems; repair broken joints in drains and leaks in supply pipes. Where structural distress is evident see advice. If seepage observed, determine causes or seek advice on consequences.	

Extract from "Landslide Risk Management Concepts and Guidelines", Australian Geomechanics Society Journal, Volume 37 No. 2, May 2002, p43.

Figure 2 – Illustration of good and poor hillside practices

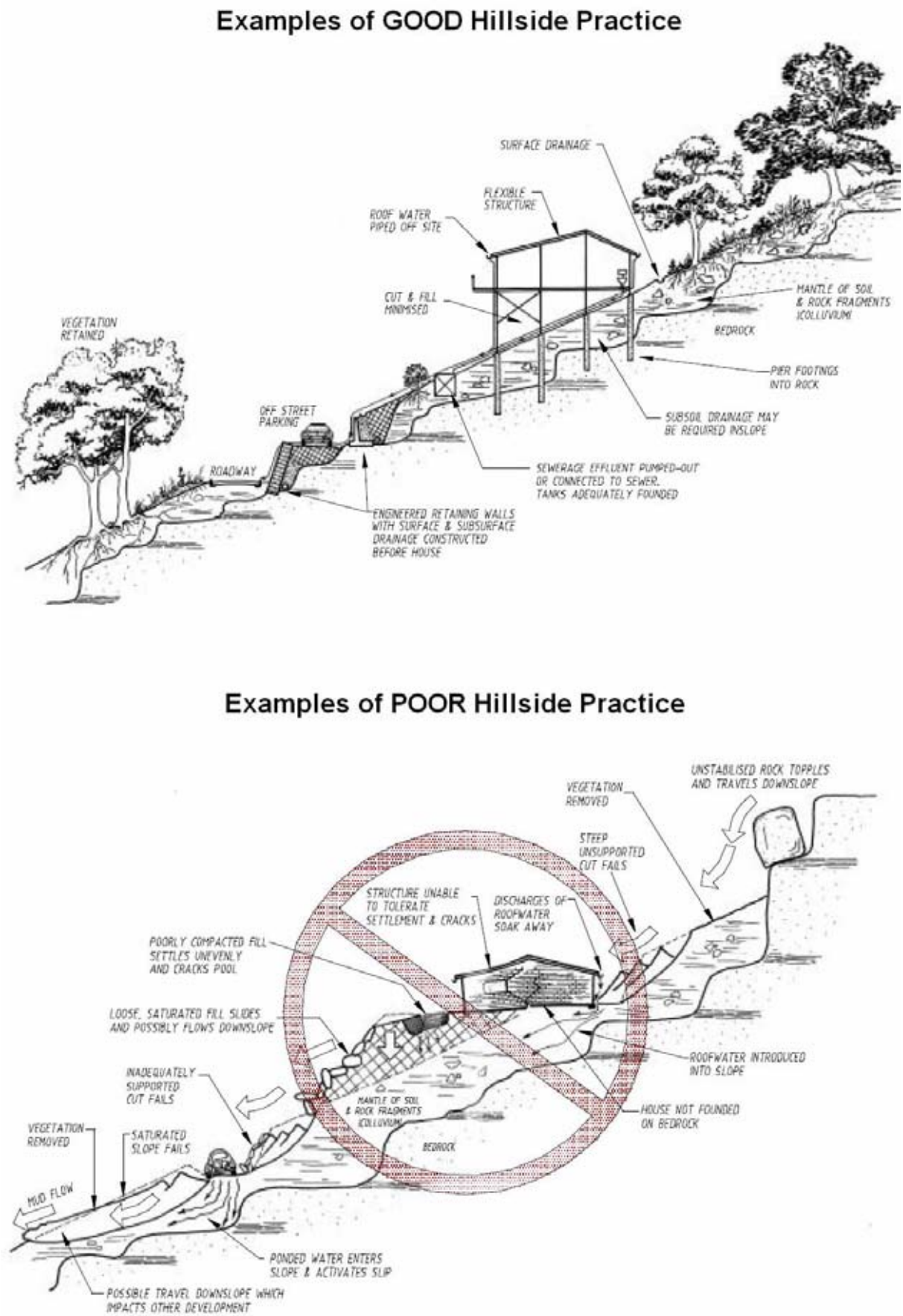

Extract from "Landslide Risk Management Concepts and Guidelines", Australian Geomechanics Society Journal, Volume 32 No. 2, May 2002, P44.

15.8.2 What guidelines apply to road design over sloping ground

(1) Roads on side slopes usually are formed by a combination of cut and fill operations. The design must incorporate effective drainage, and should incorporate good practices:

(2) The road cut slope design should incorporate:

(a) The adoption of batter slopes appropriate to the engineering properties of the different materials exposed in the cut face. As a general rule batters in soil should be 2H:1V, in poor rock 1H:1V and in good rock 0.5H to 1V.

(b) Where cuttings in rock are proposed, road alignments should be planned as not to coincide with major jointing orientations of the rock.

(c) The higher cut faces should include the provision of benches at vertical intervals of not greater than 10m. These benches are required to catch fallen material, to control drainage and to provide access for maintenance of the cut face.

(d) The provision of formed surface drains at the top of the cut slope, on the benches and at the toe of the cut slope.

(e) The provision of slope protection, slope treatment or slope support in areas of potential concern. Slope protection against erosion may utilise a cover of topsoil and grass. On steeper slops treatment of erodible and closely joined rock is commonly by a cover mesh and shotcrete with rock bolts providing treatment of areas with adversely oriented joining. In areas of greater concern slope support can be provided by an engineered retaining wall. The design of the wall depends on the site conditions and cut dimensions but could include gabion crib, masonry and reinforced concrete wall designs.

(3) The road fill embankment design should incorporate:

(a) The removal of all unsuitable material including trees, vegetation and topsoil from embankment foundation.

(b) The preparation of the embankment foundation by the formation of terraces across the slope. These terraces should be at least 2m wide with a maximum height of 0.6m.

(c) The installation of drainage, if required, in the foundation. This drainage may involve trench drains in areas of local seepage or a drainage blanket in an area that is generally wet.

(d) The embankment fill should be placed in an engineered manner. Placement of earth fill should be in layers – each not thicker than 300mm and compacted by roller to not less than 95% relative to Standard Compaction.

(e) The design of compacted earth fill slopes in soil should be no steeper than 1.5H:1V, and may often be lower subject to retained height, soil strength and maintenance considerations. Surface protection should be my grass or rock.

(f) The provision of drainage at the crest and toe of the embankment as formed drains leading to an identified disposal area.

(4) Examples of how to maintain slope stability for road design is illustrated in Figure 3.

Figure 3 – Possible methods of maintaining stability in road design

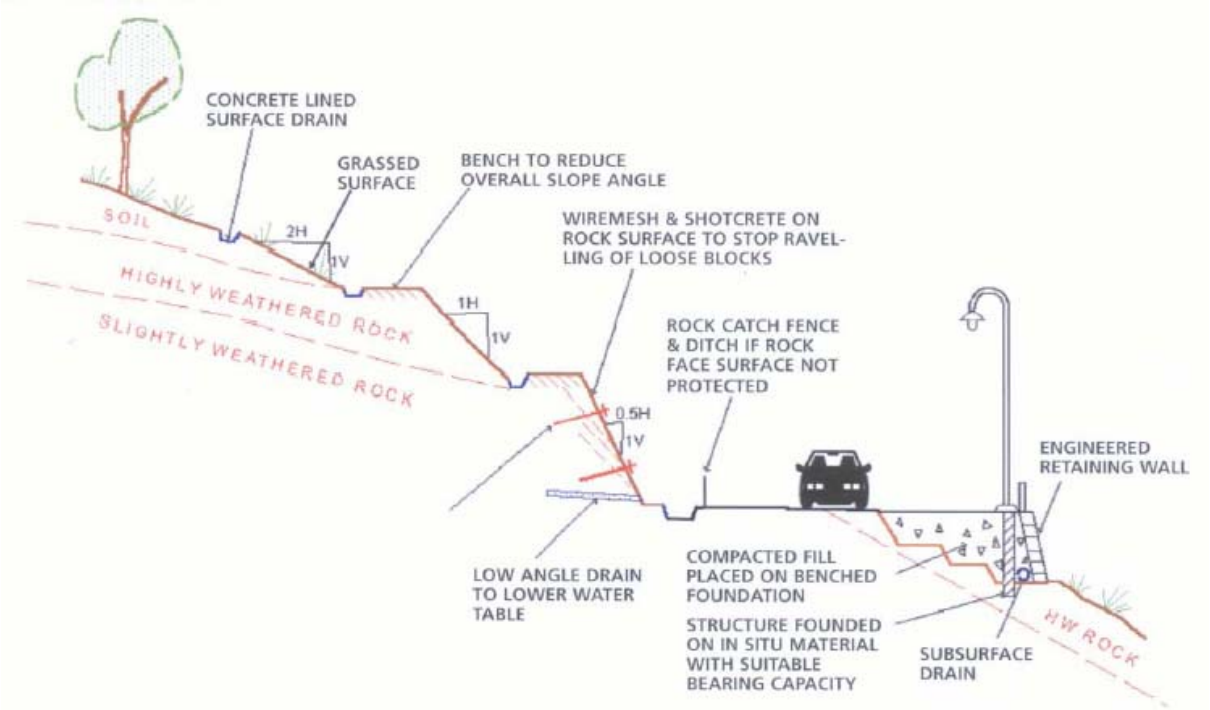

15.9 References

- Queensland Government, State Planning Policy 1/03 “Mitigating the Adverse Impacts of Flood, Bushfire and Landslide” (SPP1/03), May 2003.
- Queensland Government, State Planning Policy 1/03 Guideline “Mitigating the Adverse Impacts of Flood, Bushfire and Landslide” (SPP1/03), June 2003.
- Australian Geomechanics Society Sub-Committee on Landslide Risk Management, “Landslide Risk Management Concepts and Guidelines”, Australian Geomechanics Journal, Volume 37 No, 2, May 2002.
- McGregor and Taylor “A Method of Zoning Landslide Hazards”, Australian Geomechanics Journal, Volume 36 No. 3. Sept 2001.

Planning Scheme Policy 16 – Safer by Design

16.1 Purpose

(1) The purpose of this policy is to

(a) Support statements from Redland City Council's Corporate Plan 2006-2010 and the Redlands Planning Scheme;

(b) Create safe and secure urban environments by incorporating Crime Prevention Through Environmental Design (CPTED) principles into planning, design, construction, management and maintenance of the urban environment;

(c) Promote and integrate safety and security measures in the planning, design and construction of development applications under the Redlands Planning Scheme, council capital works programs and the management of the public realm;

(d) Raise awareness of CPTED/Safe Design principles and applications;

(e) Reduce opportunities for crime, fear of crime and promote social well-being;

(f) Optimise the community's use of public space.

16.2 Context

(1) The intent of this policy is to maintain Redland City's status as a safe place to live, work and visit by enhancing perceptions of safety and improving quality of life. Under the Corporate Plan and Redlands Planning Scheme, Redland City Council aims to enhance safety and security in a range of public, semi-public and privet spaces. This policy assists developers, designers, planners and property owners to understand and implement the principles of safe design.

16.3 Policy and Standards Compliance

(1) All approved works undertaken for a range of uses are to adhere to the principles of the Safer by Design Policy as well as, but not limited to –

(a) relevant Redland City Council Policy Procedures;

(b) relevant Redland City Council Guidelines;

(c) relevant Redland City Local Laws and Subordinate Local Laws;

(d) relevant Australian Standards;

(e) the Building Code of Australia;

(f) other relevant design and construction standards.

16.4 "Safer by Design" Principles

(1) Safe design or CPTED is the "…application of a range of design initiatives and principles to a…location…to minimise the potential for that site to facilitate and support criminal behaviour. CPTED is based on the premise that proper design and effective use of the physical environment can produce behavioural effects that will reduce the incidence and fear of crime thereby improving quality of life" (Crowe, 1991). There are four fundamental principals of CPTED which apply to various land use types:

(a) surveillance
(b) access control
(c) territorial reinforcement
(d) management and maintenance

(2) Surveillance

(a) The monitoring of activities aids in the detection of illegitimate users. Surveillance can be natural (e.g. observers), organised (e.g. security patrols) or mechanical (e.g. security cameras). High levels if surveillance (particularly natural surveillance) decrease the anonymity of illegitimate users and maximise feelings of safety for legitimate users.

(i) Concealment reduction and clear sight lines

a. When legitimate users can see what is around them and illegitimate users have no opportunities for concealment, natural surveillance is optimal. Surveillance is applicable to all spaces, but some principals to consider are:

- Alleyways and predictable routes are designed and constructed with clear sightlines and traverse short distances so that there is no entrapment zones for users
- Corner mirrors can increase lines of sight on blind corners
- Building entrances and windows should be oriented toward the street to enhance opportunities for natural surveillance

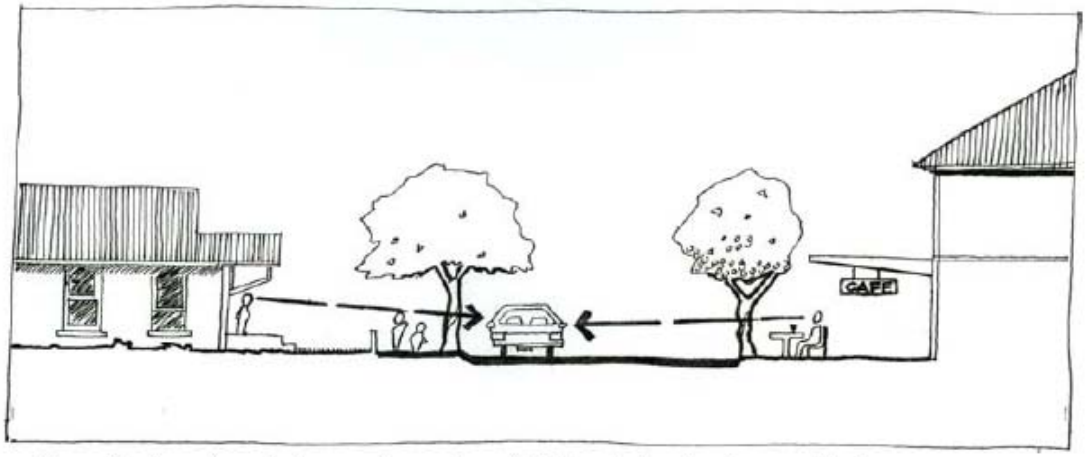

Figure 1. *A number of observers have clear sight lines to the streetscape allowing for natural surveillance*

(ii) Lighting

a. Lighting can improve real and perceived levels of safety. Appropriate lighting makes legitimate users aware of their surroundings while minimising opportunities for concealment. Considerations for effective lighting include:

- Lighting should comply with Australian Standard 1158 Public Lighting Code
- Lighting design and placement is to illuminate potential areas of concealment and is to project illumination so that a human face is easily discernable from a suggested distance of 15 metres
- Lighting is to render people, colours, vegetation and objects correctly. i.e. 'white' light. Particular attention should be given to pathways. driveways and common external spaces
- Placement of lighting and plants should not conflict with the provision of a safe pedestrian environment
- Building/pathway entrances and exits should be well lit
- Lighting should be provided only where the need or high public use is evident

- The type and structure of the lighting should be dependent on need, location and other environmental factors
- Natural surveillance in car parks can be enhanced with lighting but relevant Australian Standards for high use car parks, disability access and larger car parks must be considered where relevant

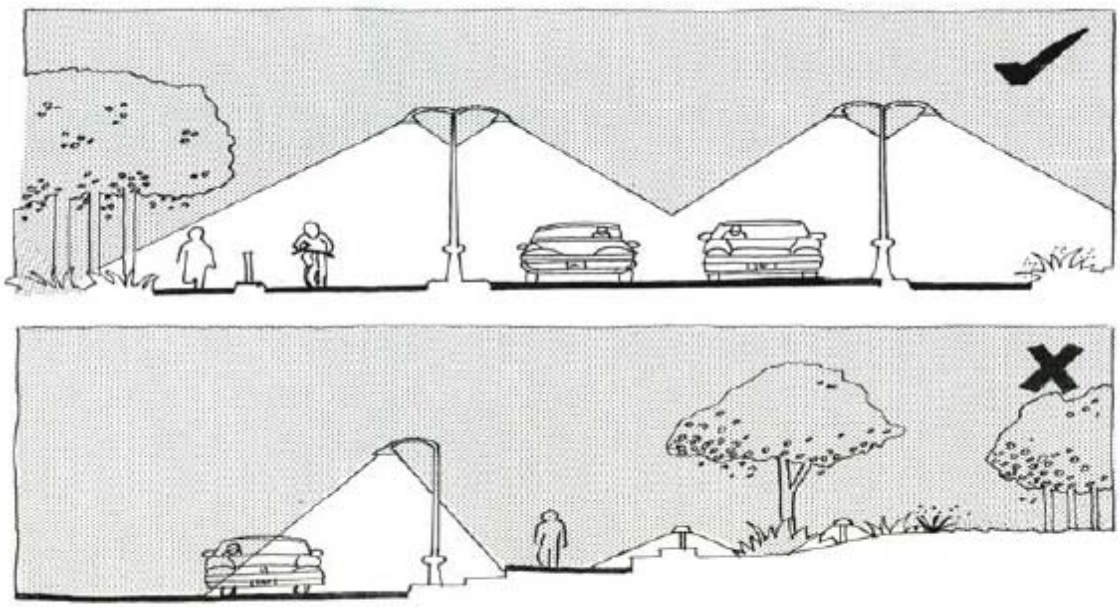

Figure 2. Lighting design is to provide safe levels of visibility

(iii) Vegetation

a. Vegetation enhances the amenity of public places but inappropriate location of plant material can potentially jeopardise real and perceived levels of safety. For vegetation to contribute to natural surveillance the following should be taken into account:

- Trees located near pathways, car parks, driveways, street corners and at the entry to buildings are to be maintained with a clear trunk to a suggested height of 1 metre. Understorey planting is to be groundcovers to a suggested height of 500mm
- Planting along pedestrian paths is to be restricted to groundcovers and shrubs at a suggested height of 500mm and within a suggested 2 metres on either side of the path
- A regular maintenance regime must be undertaken so that vegetation is not overgrown, rubbish is removed and the area looks cared for and respected

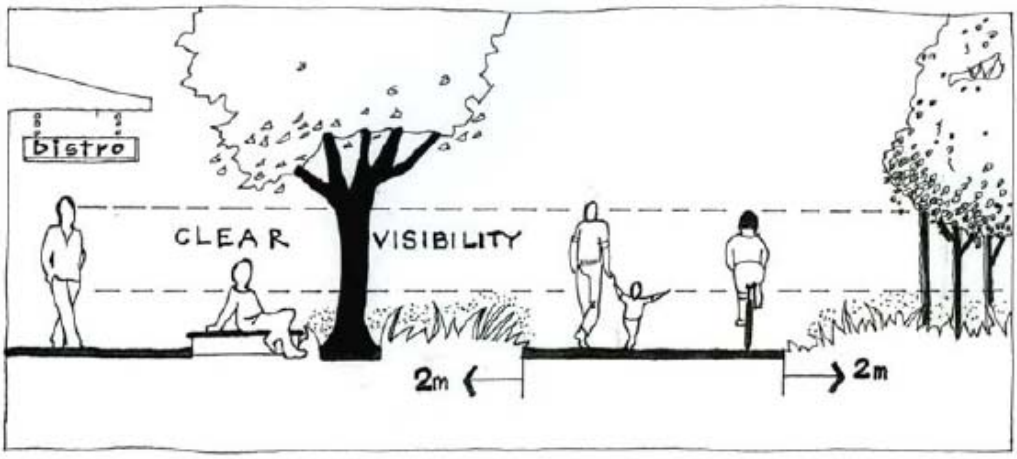

Figure 3. Vegetation should not obscure sight lines and movement

(3) Access Control

(a) Access control is achieved with design features that guide legitimate users through a space, highlight entrances/exits and deny offenders access to targets.

(b) Access control can also incorporate "target handling' or the physical securing of buildings and places to deter offenders. Amenity must be balanced with target hardening measures because excessive target hardening, such as excessive use of bars or gates, can create a fear of crime and impact upon community well-being.

(i) Movement and access

a. Safe movement and access promote the use of a space and reduce vulnerability to crime. For example:

- Ensure there are no entrapment zones in the area, allowing users to move freely throughout the space and easily exit if necessary
- Avoid movement predictors such as alleyways
- Public access to the rear of buildings should be restricted. Secluded pathways should not be located at the rear of buildings. If this is not achievable enhanced visibility and lighting should be considered
- All entries and exits should be accessible and visible
- Avoid excessive entry and exit points that provide escape routes for potential offenders
- Avoid natural ladders (such as balconies or structures) that aid access to private spaces
- Multi-level car parks should have direct access to each level of the building
- Multi-level car parks in mixed-use shopping centres should have lift access to each level of the car park independent of the shopping centre to accommodate after hours users of the car park

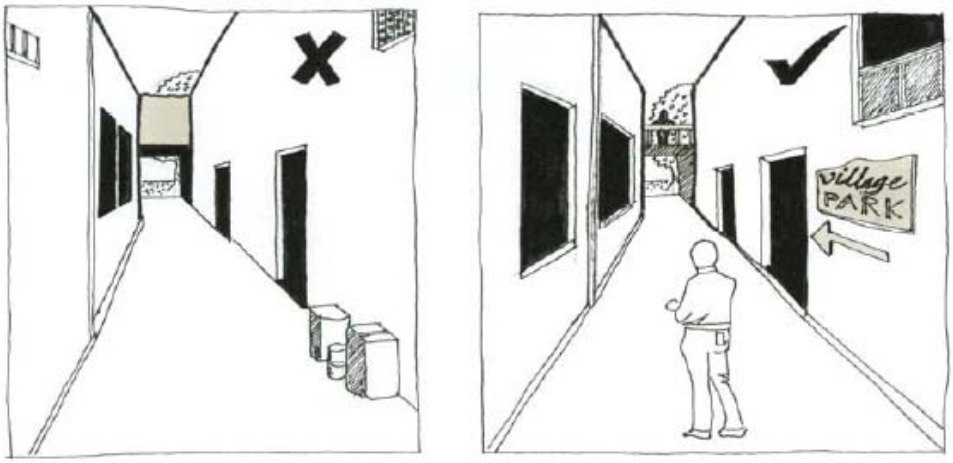

Figure 4. Movement predictors should be avoided but where this is not possible legible connections should be maximised

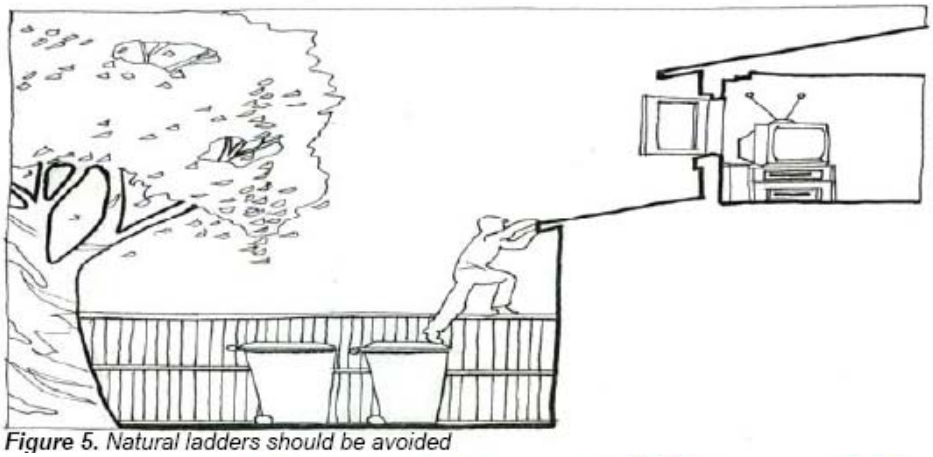

Figure 5. Natural ladders should be avoided

(ii) Way-finding and signage

a. Symbols, cues and signage assist legitimate users to safely navigate through an area and remove reasons for illegitimate users to be in the designed space.

- Signage should be in accordance with Australian Standard 1428.1 Design for Access and Mobility and in areas such as multi-level public car parks include textures and distinct colours to assist way finding
- Signage should indicate where assistance can be located (e.g. telephones, public transport)
- Signage should be legible from a suggested distance of 10 metres
- Regular signposting along main pedestrian routes is necessary for continuity and reinforcement of way-finding
- Directional and assistance signage and maps should be illuminated if the space is used at night

Figure 6. *Clear signage and legible connectivity assists in way-finding*

(iii) Fencing and gates

a. Fencing can effectively control access but if not appropriately designed and constructed can reduce opportunities for natural surveillance. The following should be considered:

- Acoustic barriers that have openings for pedestrian connectivity should have vandal-resistant permeable gates and side barriers so that visibility and safe access for users into the adjoining space is assured
- Play areas in parks should be located so they are visible from adjoining properties. Low permeable fencing can deter illegitimate users from the play area
- Gates should be designed with some permeability to permit surveillance of alleyways

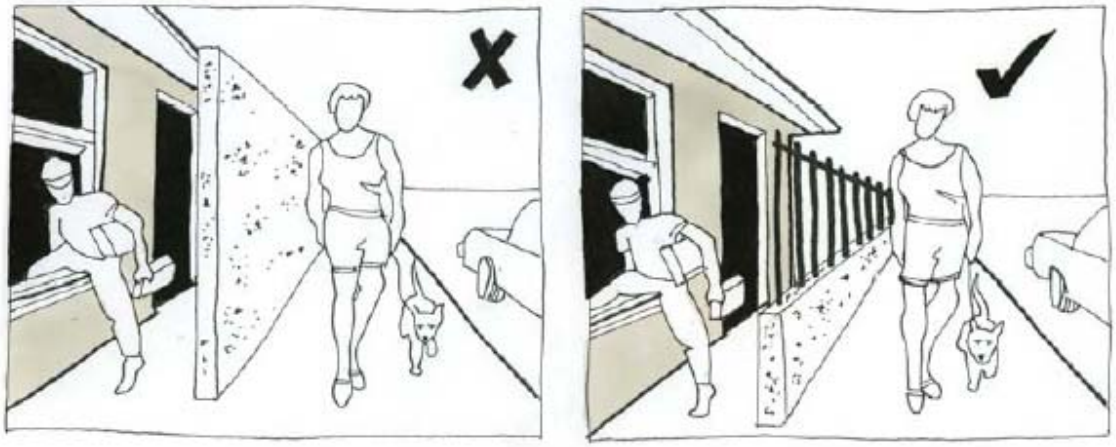

Figure 7. Solid fencing prevents visibility but permeable or semi-permeable fencing promotes natural surveillance

(iv) Target hardening

a. Target hardening involves entry control systems such as:

- Access control measures at entry and exit points
- Allowing residents-only access to private car parks
- Security films on windows near doorways
- Security screens and grilles
- Alarm systems
- Security blocks

(4) Territorial Reinforcement

(a) Well-designed physical features should delineate private, semi-private and public space. This clarifies ownership of an area while assisting in the timely detection of illegitimate users.

(i) Clear definition of boundaries

a. The design and layout of an area should define ownership and the intended use of space so that illegitimate use of the area is apparent to observers and so is less likely to occur. A range of techniques can be used to define boundaries, ownership and intended use:

- Signage, particularly located at decision points
- Physical barriers (fences) and subtle barriers (vegetation)

- Environmental cues such as changes in surface material, grade/elevation and lighting levels
- Personalising and marking territory though creating distinctive entries to private spaces

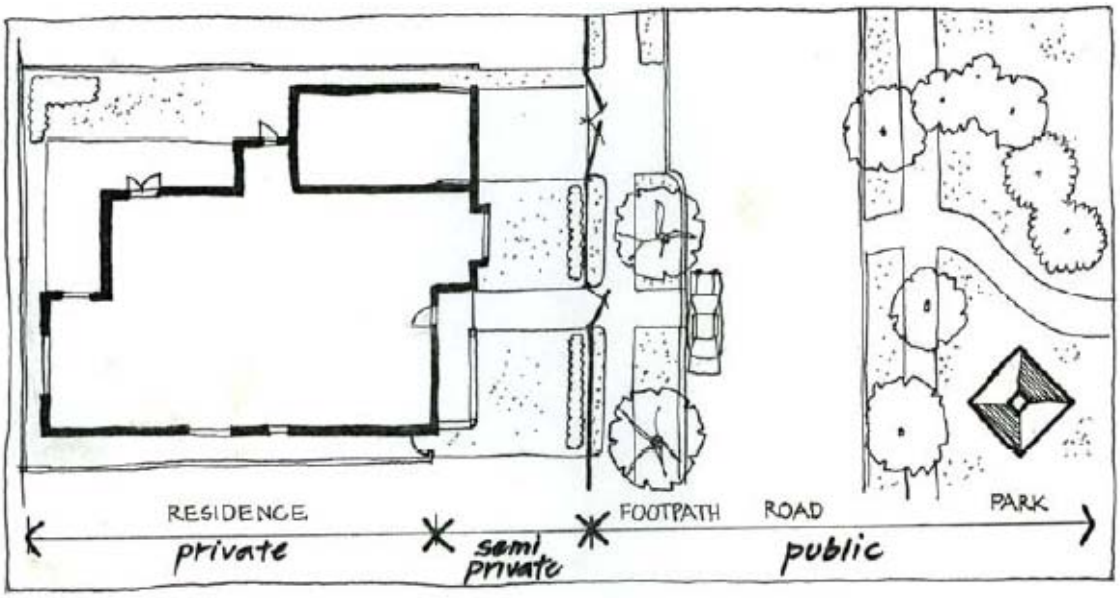

Figure 8. Clearly marking the distinction between private, semi-private and public space allows for territorial reinforcement

(5) Management and Maintenance

(a) Spaces with are well managed and maintained enhance feelings of safety, reduce illegitimate use, and increase legitimate use. Management and maintenance indicate ownership and guardianship and can be a territorial reinforcement measure.

(i) Activity mix and generation

a. The combination of a range of activities and uses in a precinct has the potential to encourage legitimate use and enhance natural surveillance. Generating activity mix prevents the concentration of vulnerable activities (such as hotels and bars) and facilitates the use of space at various times.

- Encouraging public spaces to be used during the day and night
- Avoiding potentially conflicting uses
- Balancing potentially crime generating activities (such as licensed premises) with other uses
- Promoting ground level activity

(ii) Maintenance

a. Prompt maintenance and repair indicates ownership and guardianship with prevents crime and antisocial behaviour. Easily maintained materials should be considered in the design and construction stages of a development. This can be achieved through:

- The use of robust and durable materials such as stainless steel wherever possible
- Selecting easy-to-maintain surfaces such as tiles and darker coloured paint
- Providing contact details for the public to report vandalism or damage to facilitate prompt repair

16.5 Application

(1) This is applicable to all material change of use as determined by the Redlands Planning Scheme, capital works programs initiated by Council and management of the public realm.

(2) Examples of land uses and public spaces where the application of safe design principals are particularly relevant are:

(a) Residential areas (multiple dwellings)
(b) Open spaces such as parks
(c) Industrial and commercial land use
(d) Neighbourhood and street design
(e) General building design
(f) Educational institutions and care facilities
(g) Service stations
(h) Car parks
(i) Public transport hubs and stations
(j) Placement of ATMs and public phones
(k) Pedestrian underpasses and overpasses to transport corridors
(l) Entertainment venues and places of worship
(m) Shopping centres and town/activity centres
(n) Public amenities
(o) Pathways, alleyways and laneways

Planning Scheme Policy 17 – Streetscape Design Manuals

17.1 Purpose

(1) The purpose of this policy is to support the provisions of the Redlands Planning Scheme, specifically the Major Centre Zone Code in the assessment of development applications that are required to undertake streetscape works improvements.

(2) The Streetscape Design Manuals provide specification and guidance to developers in satisfying the works requirements under the Redlands Planning Scheme and to achieve the creation of a high quality, unified and consistent streetscape adjacent to their developments and across the Centres.

17.2 Applicabilit y

(1) This policy is applicable to the assessment of development applications within the Cleveland and Capalaba Principal Activity Centres (with the extent of the centre area as defined in the individual streetscape design manuals).

(2) The Streetscape Design Manuals called up under this policy include:
   (a) Capalaba Principal Activity Centre Streetscape Design Manual;
   (b) Cleveland Principal Activity Centre Streetscape Design Manual.

17.3 Policy and Standards Compliance

(1) This policy functions as a planning instrument for assessment of applicable new developments under the *Integrated Planning Act 1997* (IPA).

(2) The policy provides support to achieving the specific outcomes of applicable codes in the Redlands Planning Scheme.

Note -

- Council from time to time may establish new Streetscape Design Manuals for different identified centres within the local government area, when it is deemed necessary.
- The manuals will also establish the specifications for the local government in its function of Streetscape asset replacement and maintenance.

this page purposely
left blank

Part 12 - Planning Scheme Notations

Division 1 - Amendments

12.1.1 Planning Scheme Amendments

(1) Table 1 provides a list of annotations for planning scheme amendments showing the provisions affected by each amendment.

Table 1 - List of Planning Scheme Amendments

Amendment No. -	Date Adopted -	Effective Date -
Part	**Planning Scheme Policy**	**Notes**
Part 11 Planning Scheme policies	**Policy 16 – Safer by Design –** adopted by Council and came into force on 29th August 2007.	
	Policy 17 – Streetscape Design Manuals – adopted by Council and came into force on 28th November 2007.	
	Policy 15 – Landslide Hazard – adopted by Council on 20th August 2008 and came into force on 8th September 2008.	Incorporated into RPS V.2
	Policy 9 – Infrastructure Works – Waste Management (amendments) – adopted by Council on 20th August 2008 and came into force on 8th September 2008.	Incorporated into RPS V.2

Amendment No. - 1A	Date Adopted - 2nd July 2008	Effective Date - 2nd July 2008	
Part	**Division/ Schedule/ Planning Scheme Policy**	**Page(s) remove**	**Page(s) insert**
Part 4 Zones	**Division 3 – Conservation Zone** Expansion of 4.3.3 (2) [pg 2] Explanatory notations in column 2 of the level of assessment table [pg 8] Additional assessment criteria for Home Business use [pg 3] **Division 5 – Emerging Urban Community Zone** Expansion of 4.5.3 (2) [pg 2] Explanatory notations in column 2 of the level of assessment table [pg 8-9] Additional assessment criteria for Home Business use [pg 4] Self Assessable Private Swimming Pool provision [pg 9] The exempt provision for swimming pools was removed and replaced with a self-assessable provision. **Division 6 – Environmental Protection Zone** Expansion of 4.6.3 (2) [pg 2] Explanatory notations in column 2 of the level of assessment table [pg 7-8] Additional assessment criteria for Home Business use [pg 3] Self Assessable Private Swimming Pool provision [pg 8] **Division 8 – Investigation Zone** Expansion of 4.8.3 (2) [pg 2] Explanatory notations in column 2 of the level of assessment table [pg 7-8] Additional assessment criteria for Home Business use [pg 4] Self Assessable Private Swimming Pool provision [pg 8] **Division 9 – Island Industry Zone** Private Swimming Pool exempt provision removed [pg 9] **Division 10 – Local Centre Zone** Expansion of 4.10.3 (2) [pg 2] Explanatory notations in column 2 of the level of assessment table [pg 9-10] Additional assessment criteria for Home Business use [pg 4] Self Assessable Private Swimming Pool provision [pg 10] **Division 11 – Low Density Residential Zone** Expansion of 4.11.3 (2) [pg 2] Explanatory notations in column 2 of the level of assessment table [pg 3, 8-9] Additional assessment criteria for Home Business use [pg 4] Self Assessable Private Swimming Pool provision [pg 9] **Division 13 – Marine Activity Zone** Private Swimming Pool exempt provision removed [pg 10]	**Note:** Amendments 1A and 1B resulted in an entirely new reprint of the Redland Planning Scheme as Version 2. (RPS V.2)	

Amendment No. - 1A	Date Adopted - 2nd July 2008	Effective Date - 2nd July 2008

Part	Division/ Schedule/ Planning Scheme Policy	Page(s) remove	Page(s) insert
Part 4 Zones	**Division 14 – Medium Density Residential Zone** Expansion of 4.14.3 (2) [pg 2] Explanatory notations in column 2 of the level of assessment table [pg 5, 14-15] Additional assessment criteria for Home Business use [pg 6] Self Assessable Private Swimming Pool provision [pg 15] **Division 15 – Neighbourhood Centre Zone** Private Swimming Pool exempt provision removed [pg 12] **Division 17 – Park Residential Zone** Expansion of 4.17.3 (2) [pg 2] Explanatory notations in column 2 of the level of assessment table [pg 3, 7-8] Additional assessment criteria for Home Business use [pg 4] Self Assessable Private Swimming Pool provision [pg 8] **Division 21 – Rural Non-Urban Zone** Expansion of 4.21.3 (2) [pg 2] Explanatory notations in column 2 of the level of assessment table [pg 4, 9-10] Additional assessment criteria for Home Business use [pg 4] Self Assessable Private Swimming Pool provision [pg 10] **Division 22 – SMBI Centre Zone** Additional assessment criteria for Home Business use [pg 5] Private Swimming Pool exempt provision removed [pg 11] **Division 22 – SMBI Residential Zone** Deletion of various General Codes from the Level of Assessment Table [pg 3, 7] Expansion of Overall Outcome 4.23.7(e)(ii)(c) [pg 11] Expansion of Specific Outcome S5.2 and Probable Solution P5.2 [pg 19] Additional assessment criteria for Home Business use [pg 3] Private Swimming Pool exempt provision removed [pg 8] **Division 24 – Urban Residential Zone** Expansion of 4.24.3 (2) [pg 2] Explanatory notations in column 2 of the level of assessment table [pg 4, 9-10] Additional assessment criteria for Home Business use [pg 4] Self Assessable Private Swimming Pool provision [pg 10]		

Amendment No. - 1A	Date Adopted - 2nd July 2008	Effective Date - 2nd July 2008

Part	Division/ Schedule/ Planning Scheme Policy	Page(s) remove	Page(s) insert
Part 4 Zones	**All Zones** **Excavation and Fill** - Exempt provisions have been amended to clarify that the exempt criteria is applicable to „total' disturbance. Modify exempt provision Exempt If - (1) disturbing less than 50m³ of soil; (2) of a height/depth not exceeding 300mm measured from ground level.		
Part 5 Overlays	**Division 3 – Bushfire Hazard** Insert note in Section 5.3.2 Levels of assessment for development affected by Bushfire Hazard Overlay – [pg 2] Insert Acceptable Solution A1.(2) [pg 7] **Division 5 – Extractive Resources** Insert Self-Assessable section 5.5.8 Modify Table of Assessment 5.5.4 **Division 6 – Flood Prone, Storm Tide and Drainage Constrained Land** Insert note in Section 5.6.2 Levels of assessment for development affected by the Flood Prone, Storm Tide and Drainage Constrained Land Overlay – [pg 2] Modify Table of Assessment 5.6.4 Expand scope of Column 2 of Table of Assessment 5.6.4 **Division 7 – Habitat Protection** Insert note in Section 5.7.2 Levels of assessment for development affected by the Habitat Protection Overlay - [pg 2] Insert Acceptable Solution A1.(d) [pg 8] Modify Table of Assessment 5.7.4 Expand scope of Column 2 of Table of Assessment 5.7.4 **Division 9 – Protection of the Poultry Industry** Insert note in Section 5.9.2 Levels of assessment for development affected by the Protection of the Poultry Industry Overlay - [pg 2] **Division 10 – Road and Rail Noise Impacts** Insert note in Section 5.10.2 Levels of assessment for development affected by the Flood Prone, Storm Tide and Drainage Constrained Land Overlay - [pg 2] Incorporate Domestic Additions as exempt where not a habitable room. [pg 4] Incorporate On-site Raising or Relocation as exempt where for raising only [pg 4]		

Amendment No. - 1A	Date Adopted - 2nd July 2008	Effective Date - 2nd July 2008

Part	Division/ Schedule/ Planning Scheme Policy	Page(s) remove	Page(s) insert
Part 5 Overlays	**Division 12 – Waterways, Wetlands and Moreton** Insert note in Section 5.12.2 Levels of assessment for development affected by the Flood Prone, Storm Tide and Drainage Constrained Land Overlay – [pg 2] Modify Table of Assessment 5.12.4 Expand scope of Column 2 of Table of Assessment 5.12.4		
Part 5 Overlays	**ALL ZONES - with the exception of Flood Prone, Storm Tide and Drainage Constrained Land Overlay.** **Excavation and Fill** - Exempt provisions have been amended to clarify that the exempt criteria is applicable to „total' disturbance. Modify exempt provision Exempt If - (1) disturbing less than 50m³ of soil; (2) of a height/depth not exceeding 300mm measured from ground level.		
Part 6 Use Codes	**Division 11 - Dwelling House Code** Insert title in 6.11.1 [pg 1] „Building Act 1975 (as amended) Alternative Provisions to Queensland Development Code Part 12 (section 6.11.2);' Insert section 6.11.2 - „Building Act, 1975 (as amended) Alternative Provisions to Queensland Development Code Part 12 [pg 1] Restructure and modify Self-Assessable section 6.11.5 [pg 2] Reformat and modify Probable Solutions section within 6.11.6 [pg 3-5] Reformat and modify Specific Outcomes section within 6.11.6 [pg 3-5] Reformat and modify Table 1 [pg 6] Insert Table 2 [pg 6]		
Part 7 Other Development Codes	**Division 3 - Domestic Additions Code** Insert title in 7.3.1 [pg 1] Building Act 1975 (as amended) Alternative Provisions to Queensland Development Code Part 11 and 12 (section 7.3.2)' Insert section 7.3.2 - „Building Act 1975 (as amended) Alternative Provisions to Queensland Development Code Part 11 and 12 [pg 1] Restructure and modify Self-Assessable section 7.3.5 [pg 2] Reformat and modify Probable Solutions section within 7.3.6 [pg 3-4] Reformat and modify Specific Outcomes section within 7.3.6 [p3-4] Reformat and modify Table 1 [pg 5] **Division 4 - Domestic Driveway Crossover Code** Relax Self-Assessable width criteria - 7.4.4 A1(3)a [pg 2] Relax Probable Solution criteria - 7.4.5 P1 (i)(i) [pg 3]		

Amendment No. - 1A	Date Adopted - 2nd July 2008	Effective Date - 2nd July 2008

Part	Division/ Schedule/ Planning Scheme Policy	Page(s) remove	Page(s) insert
Part 7 Other Development Codes	**Division 5 - Domestic Outbuilding Code** Insert title in 7.5.1 [pg 1] „Building Act, 1975 (as amended) Alternative Provisions to Queensland Development Code Part 11 and 12 (section 7.5.2)' Insert section 7.5.2 - Building Act 1975 Alternative Provisons to Queensland Development Code Part 11 and 12 [pg 1]' Restructure and modify Self-Assessable section 7.5.5 [pg 2] Reformat and modify Probable Solutions section within 7.3.6 [pg 3-4] Reformat and modify Specific Outcomes section within 7.3.6 [pg 3-4] Reformat and modify Table 2 [pg 4] **Division 7 - On-Site Raising or Relocation** Insert title in 7.7.1 [pg 1] „Building Act 1975 (as amended) Alternative Provision to Queensland Development Code part 11 and 12 (section 7.7.2)' Insert section 7.7.2 - Building Act 1975 (as amended) Alternative Provisions to Queensland Development Code Part 11 and 12 [pg 1] Restructure and modify Self-Assessable section 7.7.5 [pg 2] Reformat and modify Probable Solutions section within 7.7.6 [pg 3-4] Reformat and modify Specific Outcomes section within 7.7.6 [pg 3-4] Reformat and modify Table 1 [pg 5] **Division 8 – Private Swimming Pool** Insert title in 7.8.1 [pg 1] „Building Act, 1975 (as amended) Alternative Provisions to Queensland Development Code Part 11 and 12 (section 7.8.2)' Insert section 7.8.2 – Building Act 1975 (as amended) Alternative Provisions to Queensland Development Code Part 11 and 12 [pg 1] Insert Self Assessable Table (section 7.8.5) [pg 2] Reformat and modify Specific Outcomes and Probable Solutions section 7.8.6 [pg 2]		
Part 8 General Codes	**Division 2 – Centre Activity** Delete Acceptable Solution A1.(4) [pg 2] Remove from Acceptable Solution A1.(1) [pg 2] (g) Open Space Zone **Division 4 – Commercial Industry Activity** Delete Acceptable Solution A1.(4) [pg 2] Remove from Acceptable Solution A1.(1) [pg 2] © Marine Activity Zone		

Amendment No. - 1A	Date Adopted - 2nd July 2008	Effective Date - 2nd July 2008

Part	Division/ Schedule/ Planning Scheme Policy	Page(s) remove	Page(s) insert
Part 8 General Codes	**Division 5 - Development Near Underground Infrastructure Code** Expand Self-Assessable Provisions [pg 2] Self-Assessable Notations [pg 2] Insert Note Replace „access ways' with „maintenance holes and pits'[pg 2-4]		
Part 9 Schedules	**Schedule 3 – Dictionary** Division 2 – Administrative Terms Insert Alternative Provision [pg 3]- Modify Domestic Addition definition to insert and replace with (b) and (c) [pg 6] Excavation and Fill Omit – associated with building work' in the exclusion clause at the end of the definition. Minor Building Work [pg 10] Omit - criteria (c) for a private swimming pool Replace - criteria (b) for particular zones and for measurement of increasable gross floor area Minor Heritage Building Work [pg 10] Omit "alteration, demolition, removal or addition to an item listed in Schedule 4 – Heritage Place Register where the work" Insert "building work that" Insert (a); **or** (b); **or** (c)		

Amendment No. - 1B	Date Adopted - 27th August 2008	Effective Date - 8th September 2008

Part	Division/ Schedule/ Planning Scheme Policy	Page(s) remove	Page(s) insert
Part 1 Introduction	**Division 2** – Planning Scheme Structural Elements Insert Section 1.2.5 (9)(g)(ii) Amend the wording of section 1.2.5 (9)(g)	**Note:** Amendments 1A and 1B resulted in an entirely new reprint of the Redland Planning Scheme as Version 2. (RPS V.2)	
Part 4 Zones	**Division 3** - Amend provision in S3.1 and P3.1 **Division 6** - Amend provision in S3.1 and P3.1. **Division 12** - Expansion of 4.12.8 - Specific Outcome 2.1 **Division 15** - Relocation of Specific Outcome S1.3 into Overall Outcome 2(a)(ii) and omit Probable Solution P1.3. **Division 17** - Remove provisions within S2.2. Amend provision in S2.2. Insert a word in P2.2(1) **Division 24** - Amend level of assessment table for Reconfigurations - Column 2. Insert Notation in Column 2; Insert provision in Inconsistent Use and Other Development Table. **All Zones** - Replace Specific Outcomes in Zone Codes **Division 1** – Commercial Industry Zone Remove S6.4 and P6.4, and replace with an amended S6.4 and P6.4 **Division 2** – Community Purposes Zone Remove S5.6 and P5.6, and replace with an amended S5.6 and P5.6 **Division 4** – District Centre Zone Remove S5.4 and P5.4, and replace with an amended S5.4 and P5.4 **Division 5** – Emerging Urban Community Zone Remove S5.3 and P5.3, and replace with an amended S5.3 and P5.3 **Division 7** – General Industry Zone Remove S6.4 and P6.4, and replace with an amended S6.4 and P6.4 [pg 20] **Division 8** – Investigation Zone Remove S5.3 and P5.3, and replace with an amended S5.3 and P5.3 **Division 9** – Island Industry Zone Remove S5.4 and P5.4, and replace with an amended S5.4 and P5.4 **Division 10** – Local Centre Zone Remove S5.4 and P5.4, and replace with an amended S5.4 and P5.4 **Division 12** – Major Centre Zone Remove S6.4 and P6.4, and replace with an amended S6.4 and P6.4 **Division 13** – Marine Activity Zone Remove S6.4 and P6.4, and replace with an amended S6.4 and P6.4 **Division 15** – Neighbourhood Centre Zone Remove S5.4 and P5.4, and replace with an amended S5.4 and P5.4 **Division 16** – Open Space Zone Remove S6.5 and P6.5, and replace with an amended S6.5 and P6.5		

Amendment No. - 1B	Date Adopted - 27th August 2008	Effective Date - 8th September 2008	
Part	**Division/ Schedule/ Planning Scheme Policy**	**Page(s) remove**	**Page(s) insert**
Part 4 Zones	**Division 18** – Point Lookout Centre Zone Remove S5.4 and P5.4, and replace with an amended S5.4 and P5.4 **Division 20** – Point Lookout Tourist Zone Remove S5.5 and P5.5, and replace with an amended S5.5 and P5.5 **Division 21** – Rural Non-Urban Zone Remove S5.3 and P5.3, and replace with an amended S5.3 and P5.3 **Division 22** – SMBI Centre Zone Remove S5.3 and P5.3, and replace with an amended S5.3 and P5.3 **Division 23** – SMBI Residential Zone Remove S5.3 and P5.3, and replace with an amended S5.3 and P5.3 *The following provisions have been amended with same intent but differ in structure or wording to the provisions to above.* **Division 3** – Conservation Zone Remove S5.5 and P5.5, and replace with an amended S5.5 and P5.5 **Division 6** – Environmental Protection Zone Remove S5.5 and P5.5, and replace with an amended S5.5 and P5.5 **Division 11** – Low Density Residential Zone Remove S5.4 and P5.4, and replace with an amended S5.4 and P5.4 **Division 14** – Medium Density Residential Zone Remove S5.3 and P5.3, and replace with an amended S5.3 and P5.3 **Division 17** – Park Residential Zone Remove S5.3 and P5.3, and replace with an amended S5.3 and P5.3 **Division 19** – Point Lookout Residential Zone Remove S5.3 and P5.3, and replace with an amended S5.3 and P5.3 **Division 24** – Urban Residential Zone Remove S5.5 and P5.5, and replace with an amended S5.5 and P5.5 Remove criteria regarding landslide risks to community infrastructure and slope, soil and substructure constraints from the Specific Outcomes from a number of zones. The specific outcomes and probable solutions regarding development located on land with a slope steeper than 15 percent (1 in 7) are now dealt with in the Landslide Hazard Overlay Code. **Division 1 – Commercial Industry** Remove S5.2 (1) and (2), P5.2 (1), (2) and Note in the Assessable Development table [pg 23] Remove S6.7 (1)(b), P6.7 (1)(b) and Note in the Assessable Development table [pg 25]		

Amendment No. - 1B	Date Adopted - 27th August 2008	Effective Date - 8th September 2008	
Part	**Division/ Schedule/ Planning Scheme Policy**	**Page(s) remove**	**Page(s) insert**
Part 4 Zones	**Division 2 – Community Purposes** Remove S4.2, P4.2 and Note in the Assessable Development table [pg 22] Remove S5.7 (1)(b), P5.7 (1)(b) and Note in the Assessable Development table [pg 25] **Division 3 – Conservation** Remove S1.3 (1) and (2), P1.3 (1), (2) and Note in the Assessable Development table [pg 15] Remove S5.6 (1)(b), P5.6 (1)(b) and Note in the Assessable Development table [pg 20] **Division 4 – District Centre** Remove S4.3, P4.3 and Note in the Assessable Development table [pg 20] Remove S5.8 (1)(b), P5.8 (1)(b) and Note in the Assessable Development table [pg 23] **Division 5 – Emerging Urban Community** Remove S4.2, P4.2 and Note in the Assessable Development table [pg 16] Remove S5.4 (1)(b), P5.4 (1)(b) and Note in the Assessable Development table [pg 18] **Division 6 – Environmental Protection** Remove S1.3 (1) and (2), P1.3 (1), (2) and Note in the Assessable Development table [pg 12] Remove S5.6 (1)(b), P5.6 (1)(b) and Note in the Assessable Development table [pg 17] **Division 7 – General Industry** Remove S5.2 (1) and (2), P5.2 (1), (2) and Note in the Assessable Development table [pg 18-19] Remove S6.7 (1)(b), P6.7 (1)(b) and Note in the Assessable Development table [pg 21] **Division 8 – Investigation** Remove S4.2, P4.2 and Note in the Assessable Development table [pg 15] Remove S5.4 (1)(b), P5.4 (1)(b) and Note in the Assessable Development table [pg 17] **Division 9 – Island Industry** Remove S4.2 (1) and (2), P4.2 (1), (2) and Note in the Assessable Development table [pg 21] Remove S5.5 (1)(b), P5.5 (1)(b) and Note in the Assessable Development table [pg 23] **Division 10 – Local Centre** Remove S4.3, P4.3 and Note in the Assessable Development table [pg 18] Remove S5.8 (1)(b), P5.8 (1)(b) and Note in the Assessable Development table [pg 21] **Division 11 – Low Density Residential** Remove S4.3 (1) and (2), P4.3 (1), (2) and Note in the Assessable Development table [pg 17] Remove S5.5 (1)(b), P5.5 (1)(b) and Note in the Assessable Development table [pg 19] **Division 12 – Major Centre** Remove S5.3 (1) and (2), P5.3 (1), (2) and Note in the Assessable Development table [pg 32] Remove S6.11 (1)(b), P6.11 (1)(b) and Note in the Assessable Development table [pg 35]		

Amendment No. - 1B	Date Adopted - 27th August 2008	Effective Date - 8th September 2008	
Part	**Division/ Schedule/ Planning Scheme Policy**	**Page(s) remove**	**Page(s) insert**
Part 4 Zones	**Division 13 – Marine Activity** Remove S5.2 (1) and (2), P5.2 (1), (2) and Note in the Assessable Development table [pg 22] Remove S6.8 (1)(b), P6.8 (1)(b) and Note in the Assessable Development table [pg 26] **Division 14 – Medium Density Residential** Remove S4.3 (1) and (2), P4.3 (1)(a),(b) and (2) and Note in the Assessable Development table [pg 27-28] Remove S5.4 (1)(b), P5.4 (1)(b) and Note in the Assessable Development table [pg 29] **Division 15 – Neighbourhood Centre** Remove S4.3, P4.3 and Note in the Assessable Development table [pg 22] Remove S5.8 (1)(b), P5.8 (1)(b) and Note in the Assessable Development table [pg 24] **Division 16 – Open Space** Remove S5.4, P5.4 and Note in the Assessable Development table [pg 18] Remove S6.6 (1)(b), P6.6 (1)(b) and Note in the Assessable Development table [pg 20] **Division 17 – Park Residential** Remove S4.2 (1) and (2), P4.2 (1)(a),(b) and (2) and Note in the Assessable Development table [pg 15] Remove S5.5 (1)(b), P5.5 (1)(b) and Note in the Assessable Development table [pg 17-18] **Division 18 – Point Lookout Centre** Remove S4.5, P4.5 and Note in the Assessable Development table [pg 19] Remove S5.8 (1)(b), P5.8 (1)(b) and Note in the Assessable Development table [pg 22] **Division 19 – Point Lookout Residential** Remove the second dot point in the Note of S2.5, and P2.5 (2)(c) in the Assessable Development table [pg 16] Remove S4.5, P4.5 and Note in the Assessable Development table [pg 20] Remove S5.6 (1)(b), P5.6 (1)(b) and Note in the Assessable Development table [pg 22] **Division 20 – Point Lookout Tourist** Remove S4.5, P4.5 and Note in the Assessable Development table [pg 20] Remove S5.6 (1)(b), P5.6 (1)(b) and Note in the Assessable Development table [pg 22] **Division 21 – Rural Non-Urban** Remove S4.2 (1) and (2), P4.2 (1), (2) and Note in the Assessable Development table [pg 18] Remove S5.4 (1)(b), P5.4 (1)(b) and Note in the Assessable Development table [pg 20 **Division 22 – SMBI Centre** Remove S4.5, P4.5 and Note in the Assessable Development table [pg 21] Remove S5.7 (1)(b), P5.7 (1)(b) and Note in the Assessable Development table [pg 24] **Division 23 – SMBI Residential** Remove S4.3, P4.3 and Note in the Assessable Development table [pg 18] Remove S5.4 (1)(b), P5.4 (1)(b) and Note in the Assessable Development table [pg 19-20]		

Amendment No. - 1B	Date Adopted - 27th August 2008	Effective Date - 8th September 2008

Part	Division/ Schedule/ Planning Scheme Policy	Page(s) remove	Page(s) insert
Part 4 Zones	**Division 24 – Urban Residential** Remove S4.2 (1) and (2), P4.2 (1)(a), (b) and (2) and Note in the Assessable Development table [pg 21] Remove S5.6 (1)(b), P5.6 (1)(b) and Note in the Assessable Development table [pg 23-24]		
All Zones	Insert ***High Impact Industry*** Use (newly defined) into Inconsistent Use Tables. A new „High Impact Industry' definition has been developed to include a number of industrial activities that are considered hazardous or high risk and generally inappropriate for Redland City.		
Part 4 Selected Zones	Omit criteria from Level of Assessment Tables for Small Lot House Omit *has a minimum frontage of 14 metres* Insert *has a minimum frontage of 10 metres* The following zones have been amended – Medium Density Residential - Division 14, Point Lookout Residential - Division 19, Urban Residential - Division 24		
Part 5	**Division 7 –Habitat Protection Overlay** Insert provisions in Self Assessable table. [pg 8] Insert Notation. [pg 8] Amend Provision S1.2 (1)(e)(i). **Division 13 – Landslide Hazard Overlay** Insert new Landslide Hazard Overlay Code Add new Landslide Hazard Overlay Mapping **Division 8 -Heritage Place and Character Precinct** Overlay Modify selected areas for State and Local significant heritage listings. Add further sites for Local Heritage significant listings.		
Part 6 Use Codes	Replace Specific Outcomes and Probable Solutions in Use Codes for waste and recycling. **Division 1 – Aged Persons and Special Needs Housing** Remove and replace S8 (1)(e) and insert P8 (1)(e) [pg 6-7]; and Insert S11 (2)(a) and (b) and P11 (2) and Note [pg 8] **Division 18 – Multiple Dwelling** Insert S11 (2)(a) and (b) and P11 (2) and an additional dot point in the Note [pg 7-8] **Division 24 – Service Station** Insert S5.2 (1)(c) and insert P5.2 (1) [pg 4] **Division 4 – Apartment Building** Remove and replace S8 (1)(e) and insert P8 (1)(d) [pg 6]; and Insert S11 (2)(a) and (b), (3) and P11 (2) and (3) [pg 7]		

Amendment No. - 1B	Date Adopted - 27th August 2008	Effective Date - 8th September 2008	
Part	**Division/ Schedule/ Planning Scheme Policy**	**Page(s) remove**	**Page(s) insert**
Part 6 Use Codes	**Division 9 – Drive Through Restaurant** Insert S4.3 (1)(c) and P4.3 (1) (a) and (b) and Note [pg 4] **Division 10 – Dual Occupancy** Insert S10 (2)(a) and (b) and P10 (2) [pg 7] **Division 17 – Mobile Home Park** Remove and replace S8 (1)(c) and P8 (1) [pg 5]; and Insert S10.1 (2)(a) and (b) and P10.1 (2) and Note [pg 6 **Division 28 – Tourist Accommodation** Remove and replace S5 (1)(a) and (b) and P5 (1) [pg 6] **Division 29 – Tourist Park** Remove and replace S4.2 (1) and P4.2 (1)(a) and (b) [pg 5] **Division 11 – Dwelling House** Insert S7 (2) and P7 (2) [pg 5] **Division 25 – Small Lot House** Insert S10 (2) and insert P10 (2) [pg 7]		
Part 6 Use Codes	Remove Self Assessable provisions in Use Codes Remove Acceptable Solutions that require buildings and structures where located on land with a slope steeper than 15 percent (1 in 7) to be Code Assessable. **Division 2 – Agriculture** Remove A1(1)(b) from the Self-Assessable Development table in Section 6.2.4 [pg 2] **Division 11 – Dwelling House** Remove A1(7) from the Self-Assessable Development table in Section 6.11.4 [pg 2] **Division 25 – Small Lot House** Remove A1(6) from the Self-Assessable Development table in Section 6.25.4 [pg 2]		
Part 7 Other Development Codes	**Division 1 - Advertising Devices** Amend note in section 7.1.2 [pg 1] Amend Acceptable Solution 7.1.4 A1(2)(b)(iii) and A1(1)(c) [pg 2] Insert a new specific outcome in section 7.1.5 as S1 and P1 and remove P2 (1)(c) [pg 3] **Division 6 - Excavation and Fill Code** Remove S1(1)(c)(ii) and P1(1)(b)(i) and notation at end of provision. **Division 11 - Reconfiguration Code** Insert Probable Solution provision (i) within P2.1.2b [pg10] Remove reference to Schedule 5 - Table 2 in P3.1. [pg 14] Insert „frontage to depth ratio' Specific Outcome and Probable Solution in S3/P3. [pg 14] Insert the word „minor' at beginning of provisions S3/P3 [pg 14] Insert Specific Outcome provision S3(2)(c) [pg 14] Insert Table 1 from Schedule 5 lot sizes. [pg 19-23] Amend content of Table 1. [pg 19-23]		

Amendment No. - 1B	Date Adopted - 27th August 2008	Effective Date - 8th September 2008

Part	Division/ Schedule/ Planning Scheme Policy	Page(s) remove	Page(s) insert
Part 8 General Codes	**Division 1 – Access and Parking** Remove P8 (1)(b) and (c) and replace with amended criteria [pg 11] **Division 3 – Centre Design** Shift Specific Outcome S1.1 to Probable Solution P1.1, and develop and insert Specific Outcome criteria S1.1.		
Part 9 Schedules	**Schedule 1 – Access and Parking** Remove all references to RCV (Refuse Collection Vehicle) and replace with WCV (Waste Collection Vehicle) Amend Table 1 – Minimum On-Site Vehicle Parking Requirements [pg 1-7] Amend Note 5 of Table 8 – Design Dimensions for Service Aisles and Loading/Unloading Bays [pg 9] Amend provision in Table 1 - Minimum On-Site Vehicle Parking Requirements - Residential Uses. [pg 2] Amend provision in Table 1 - Minimum On-Site Vehicle Parking Requirements - Industrial Uses. [pg 5] Warehouse Parking Notation Insert Notation. [pg 5] **Schedule 3 – Dictionary** Division 1 – Uses Amend Dwelling House definition. [pg 3] Amend Small Lot House definition. [pg13] Insert new definition - High Impact Industry Division 1 – Administrative terms Insert definitions for Waste Management purposes. [pg 5, 6,14, 17] Insert definitions for Waste Management in „Terms Defined in Legislation'. [pg 18,19,21] Amend *Advertising Device* definition. [pg 1] Remove Temporary Advertising Device definition. [pg 16] Insert „Plan Area' definition [pg 13] **Schedule 3 – Heritage Places Register** Insert new Local Heritage listings in Table 1 – Mainland and Table 2 – North Stradbroke Island. [pg 1-3] Modifications and general formatting of Local and State listing descriptions, property names and locations in Table 1 – Mainland, Table 2 – North Stradbroke Island, and Table 3 – Southern Moreton Bay Islands **Schedule 5 – Lot Sizes** Relocate Table 1. [pg 1-5] Omit „Lot Type' column from Table 2. **Schedule 8 – Specific Advertising Devices** Amend Table 1 [pg 1] Amend Table 2		

Amendment No. - 1B	Date Adopted - 27th August 2008	Effective Date - 8th September 2008	
Part	**Division/ Schedule/ Planning Scheme Policy**	**Page(s) remove**	**Page(s) insert**
Mapping	Amendments were made to the following Overlay Maps: Bushfire Heritage Waterways Bushland Habitat Flood State Koala The following new overlay was introduced into the mapping – Landslide Hazard Cadastral and zoning changes were made to 484 individual properties.		

Amendment No. - Administrative Amendment 1	Date Adopted - 24th February 2010	Effective Date - 12th March 2010	
Part	**Division/ Schedule/ Planning Scheme Policy**	**Page(s) remove**	**Page(s) insert**
Mapping	Amendments were made to the following Overlay Maps: • Flood Prone, Storm Tide and Drainage Constrained Land The overlay map was amended for the property located at 184 Thorneside Road, Thorneside (Lot 1 RP 99635). The extent of the storm tide line over the subject land has been reviewed in line with current survey information for the property. As a result, the line indicating the extent of the overlay on the property has been amended to reduce the affected area.	No text change	No text change

Division 2 - Certain Approvals and Decisions

12.2.1 Record of Certain Approvals and Decisions

(1) Section 3.5.27 of the *Integrated Planning Act 1997* (the IPA) requires certain approvals and decisions to be noted in the planning scheme. These are -

(a) an approval the local government is satisfied is inconsistent with the planning scheme;
(b) a preliminary approval that overrides the planning scheme in accordance with section 3.1.6 of the IPA;
(c) a decision to apply a superseded planning scheme for the purpose mentioned in section 3.2.5(1)(a) and 3.2.5 (3)(a) of the IPA.

(2) Table 2 records the approvals and decisions as required by section 3.5.28 of the IPA.

Table 2 - Record of Certain Approvals and Decisions

Record of Certain Approvals and Decisions			
Date	**Land to which the Notation Relates**	**Nature of the Approval or Decision**	**File Reference Number**
Approved 07 Feb 2006 Amended 22 Jan 2008	L 2 RP221100 L 24 RP203700	Preliminary approval under the IPA, section 3.1.6 for: Redlands Business Park - "German Church Road Integrated Employment Centre - Plan of Development - Version 1.6 " dated 31 January 2006	MC008666
25 Jan 2005	L 16 RP 30555 L 17 RP 30555 L 24 RP 30555 L 25 RP 30555 L 2 RP 48270 L 2 RP 95747 L 3 RP 90361 L 11 SL 1595	Preliminary approval under the IPA, section 3.1.6 for: 1. Mixed use retirement community incorporating: - Independent and assisted living (attached and detached dwellings) - Dependent aged care residential - Local retail and services - Crèche - Community facilities 2. Dedicated park land In accordance with Central Redland Bay Plan of Development by Wolters Consulting Pty Ltd and MPS Architects received by RSC 21st January 2005.	MC008369
Approved (negotiated decision) 11 Dec 2001 Court Order 25 Oct 2002	L 3 RP 165277	Preliminary approval under the IPA, section 3.1.6 for: Industry Class I, II and III uses, Bulk Store, Caretaker's Residence, Car Repair Station, Motor Vehicle Depot, Public Utility, Service Shop, Truck Depot and Warehouse uses as defined in the Town Planning Scheme and reconfiguration of proposed Lots 1 to 17, park and balance area.	MC006008